MELSOFT

MITSUBISHI ELECTRIC

Engineering Software

CC-Link IE TSN Communication Software for Windows User's Manual

-SW1DND-CCIETCT-M

SAFETY PRECAUTIONS

(Read these precautions before using this product.)

Before using this product, please read this manual and the relevant manuals carefully and pay full attention to safety to handle the product correctly.

The precautions given in this manual are concerned with this product only.

In this manual, the safety precautions are classified into two levels: "⚠WARNING" and "⚠CAUTION".

⚠ **WARNING**	Indicates that incorrect handling may cause hazardous conditions, resulting in death or severe injury.
⚠ **CAUTION**	Indicates that incorrect handling may cause hazardous conditions, resulting in minor or moderate injury or property damage.

Under some circumstances, failure to observe the precautions given under "⚠CAUTION" may lead to serious consequences.

Observe the precautions of both levels because they are important for personal and system safety.

Make sure that the end users read this manual and then keep the manual in a safe place for future reference.

[Design Precautions]

⚠WARNING

- To perform an operation, such as data change or operating status change, to running devices, such as a programmable controller, servo, robot, or server, from an industrial PC equipped with this product, configure an interlock circuit outside of the devices so that the entire system always operates to the safety side. Additionally, read this manual carefully and ensure the safety before operations.
  Especially, in the above mentioned operations that are performed from external devices through network, any problems on devices may not be dealt with promptly due to an abnormal data communication. Configure a safety circuit outside of an industrial PC equipped with this product so that the entire system operates to the safely side even when a fault occurs in the PC.
  Failure to do so may result in an accident due to an incorrect output or malfunction.
- For the operating status of each station after a communication failure, refer to manuals relevant to the network. Incorrect output or malfunction due to a communication failure may result in an accident.
- Especially, when a remote programmable controller is controlled by an external device, immediate action cannot be taken if a problem occurs in the programmable controller due to a communication failure. To prevent this, configure an interlock circuit in the program, and determine corrective actions to be taken between the external device and CPU module in case of a communication failure.
- When data change, program change, or status control is performed from a personal computer to a running programmable controller, create an interlock circuit outside the programmable controller to ensure that the whole system always operates safely.
- If a communication cable is disconnected, the network may be unstable, resulting in a communication failure of multiple stations. Configure an interlock circuit in the program to ensure that the entire system will always operate safely even if communications fail. Incorrect output or malfunction due to a communication failure may result in an accident.

[Design Precautions]

⚠CAUTION

- During application of each setting, do not perform the operation that forcibly turns the industrial PC equipped with this product OFF. Otherwise, the data will be undefined and resetting and re-registering data will be required. Additionally, doing so may cause the malfunction of this product.

[Security Precautions]

⚠WARNING

- To maintain the security (confidentiality, integrity, and availability) of the programmable controller and the system against unauthorized access, denial-of-service (DoS) attacks, computer viruses, and other cyberattacks from external devices via the network, take appropriate measures such as firewalls, virtual private networks (VPNs), and antivirus solutions.

[Wiring Precautions]

⚠CAUTION

- Place the communication cable that is connected to a built-in Ethernet port in a personal computer or Ethernet adapter in a duct or clamp it.
  If not, the dangling cable may swing or inadvertently be pulled, resulting in damage to the cable or malfunctions due to poor contact.
- When disconnecting the communication cable, do not pull it by the cable part.
  Pulling the cable connected to the Ethernet port or the Ethernet adapter may result in malfunction or damage to the cable.
- Check the interface type and correctly connect the cable. Incorrect wiring (connecting the cable to an incorrect interface) may cause failure of the module and external device.
- Prevent foreign matter such as dust or wire chips from entering the personal computer. Such foreign matter may cause a fire, failure, or malfunction.
- Securely plug the communication cable to the build-in Ethernet port in a personal computer or Ethernet adapter. Then, check for any incomplete connection.
- Always ground the personal computer to the protective ground conductor. Failure to do so may cause a malfunction.

CONDITIONS OF USE FOR THE PRODUCT

(1) This software shall be used under the following conditions;
i) that any failure occurred in this software, if any, shall not lead to any serious accident.
ii) that the backup and/or fail-safe functions are systematically performed outside the devices in the cases of any failure occurred in this software.

(2) Mitsubishi Electric assumes no responsibility and liability (including but not limited to, default liability, defect liability, quality assurance responsibility, tort liability, product liability) for the quality, performance, and safety of both this software and products using this software.

(3) Mitsubishi Electric shall have no responsibility or liability for any problems involving this software and system trouble caused by DoS attacks, unauthorized access, computer viruses, and other cyberattacks.

INTRODUCTION

Thank you for purchasing CC-Link IE TSN Communication Software for Windows.
This manual describes the specifications, procedures before operation, and troubleshooting of CC-Link IE TSN Communication Software for Windows.
Before using this product, please read this manual and the relevant manuals carefully, and develop familiarity with the functions and performance of this product to handle correctly.
Please make sure that the end users read this manual.

CONTENTS

SAFETY PRECAUTIONS . . . 1
CONDITIONS OF USE FOR THE PRODUCT . . . 3
INTRODUCTION . . . 4
RELEVANT MANUALS . . . 7
TERMS . . . 8
GENERIC TERMS AND ABBREVIATIONS . . . 8

CHAPTER 1 CC-Link IE TSN Communication Software 9

CHAPTER 2 FUNCTIONS 11

2.1 Link Device Data Reception Function . . . 11
Data missing . . . 12
2.2 Link Device Data Access Function . . . 13
Reading snapshot data . . . 14
Reading buffering data . . . 16
2.3 Data Assurance Function . . . 20
32-bit unit assurance . . . 21
Single method assurance . . . 21
Snapshot data assurance (multiple method assurance) . . . 22

CHAPTER 3 SYSTEM CONFIGURATION 24

3.1 Overall Configuration . . . 24
3.2 Network Configuration . . . 25
3.3 Connectable Devices . . . 27
3.4 Considerations . . . 28

CHAPTER 4 PROCEDURES BEFORE OPERATION 29

CHAPTER 5 CC IE TSN Communication Software Utility 31

5.1 Screen Configuration and Basic Operations . . . 31
Start and end . . . 31
Display language switching . . . 31
Menu list . . . 32
5.2 Setting Parameters . . . 33
5.3 Checking Running Status . . . 34

CHAPTER 6 Device Monitor (CC-Link IE TSN Communication Software) 36

CHAPTER 7 TROUBLESHOOTING 38

7.1 Troubleshooting Procedure . . . 38
7.2 Checking Event ID . . . 39
Event ID . . . 39
Checking with event log . . . 39
Checking with Event Viewer . . . 40
7.3 Troubleshooting by Symptom . . . 42
Troubleshooting on CC-Link IE TSN Communication Service . . . 42
Troubleshooting on data collection . . . 44
Troubleshooting on user program . . . 44

Troubleshooting on personal computer . . . 45
Troubleshooting on CC-Link IE TSN network . . . 45
Troubleshooting on CC IE TSN Communication Software Utility . . . 45
Troubleshooting on Device Monitor (CC-Link IE TSN Communication Software) . . . 46
Troubleshooting on installation . . . 46

APPENDIX 47

Appendix 1 Performance Specifications . . . 47
Appendix 2 Device Memory . . . 48
Device list . . . 48
Appendix 3 List of Link Special Relays (SB) . . . 49
Appendix 4 List of Link Special Registers (SW) . . . 50
Appendix 5 Open Source Software . . . 53
Software information . . . 53

INDEX 56

REVISIONS . . . 58
WARRANTY . . . 59
TRADEMARKS . . . 60

RELEVANT MANUALS

Manual name [manual number]	Description	Available form
CC-Link IE TSN Communication Software for Windows User's Manual [SH-082271ENG] (this manual)	Specifications, procedures before operation, functions, and troubleshooting of CC-Link IE TSN Communication Software	e-Manual PDF
CC-Link IE TSN Communication Software for Windows Programming Manual [SH-082273ENG]	Programming, accessible devices, accessible range, class, methods, and error codes of CC-Link IE TSN Communication Library	e-Manual PDF

Point

e-Manual refers to the Mitsubishi Electric FA electronic book manuals that can be browsed using a dedicated tool.

e-Manual has the following features:

- Required information can be cross-searched in multiple manuals.
- Other manuals can be accessed from the links in the manual.
- Hardware specifications of each part can be found from the product figures.
- Pages that users often browse can be bookmarked.
- Sample programs can be copied to an engineering tool.

TERMS

Unless otherwise specified, this manual uses the following terms.

Term	Description
Authentication Class	A group of devices and switching hubs compatible with CC-Link IE TSN, classified according to the functions and performance by the CC-Link Partner Association. For authentication Class, refer to the CC-Link IE TSN Installation Manual (BAP-C3007ENG-001) published by the CC-Link Partner Association.
Buffering area	An area where link device data, which is received by CC-Link IE TSN Communication Service, is buffered (accumulated).
CC-Link IE TSN Communication Service	A Windows® service that communicates (transmits/receives) with CC-Link IE TSN devices and provides communication-related functions.
Link device	A device (RX, RY, RWr, RWw, LB, or LW) in a module on CC-Link IE TSN and CC-Link IE TSN Communication Service.
Link device data	Data of link devices received by CC-Link IE TSN Communication Service.
Local station	A station that performs cyclic transmission and transient transmission with the master station and other local stations.
Master station	A station that controls the entire network. This station can perform cyclic transmission and transient transmission with all stations. Only one master station can be used in a network.
Multicast mode	A communication mode used to send cyclic data to multiple stations.
Remote station	A station that exchanges I/O signals (bit data) and I/O data (word data) with another station by cyclic transmission. This station can also perform transient transmission.
Slave station	A station other than a master station: a local station, a remote station.
Snapshot data storage area	An area where link device data, which is received by CC-Link IE TSN Communication Service, is stored.

GENERIC TERMS AND ABBREVIATIONS

Unless otherwise specified, this manual uses the following generic terms and abbreviations.

Term	Description
LB	An abbreviation for a link relay of a link device. Bit data sent from each station of the network.
LW	An abbreviation for a link register of a link device. Word data sent from each station of the network.
RWr	An abbreviation for a remote register of a link device. This refers to word data input from a slave station to the master station.
RWw	An abbreviation for a remote register of a link device. This refers to word data output from the master station to a slave station.
RX	An abbreviation for remote input of a link device. This refers to bit data input from a slave station to the master station.
RY	An abbreviation for remote output of a link device. This refers to bit data output from the master station to a slave station.
SB	An abbreviation for a link special relay. Bit data that indicates the operating status and data link status of a module on CC-Link IE.
SW	An abbreviation for a link special register. Word data that indicates the operating status and data link status of a module on CC-Link IE.

1 CC-Link IE TSN Communication Software

CC-Link IE TSN Communication Software is software that collects CC-Link IE TSN data and monitors the collected data.
By installing this product, data can be collected from devices on CC-Link IE TSN by using general-purpose Ethernet ports.
This product can be used regardless of the form of device, as long as the devices are equipped with general-purpose Ethernet ports.
This product only receives cyclic frames so it can minimize the impact on an operating network. Furthermore, this product does not require device parameter settings for being introduced into a system; therefore, it can be easily introduced into an existing system.

Point

Data is collected by best effort functions.
Since the data collection processing time varies depending on the load on a network and the status of connected devices, data may not be collected at a certain collection interval. Run the system by fully verifying the processing time of each function when constructing the system. Whether or not data is collected at the certain interval can be checked by received data missing information. (☞ Page 15 Data missing information)

MEMO

2 FUNCTIONS

This chapter explains the functions of this product.

2.1 Link Device Data Reception Function

This function receives link device data which is sent from the CC-Link IE TSN master station.
CC-Link IE TSN Communication Service starts to receive link device data by connecting a personal computer to the CC-Link IE TSN master station.

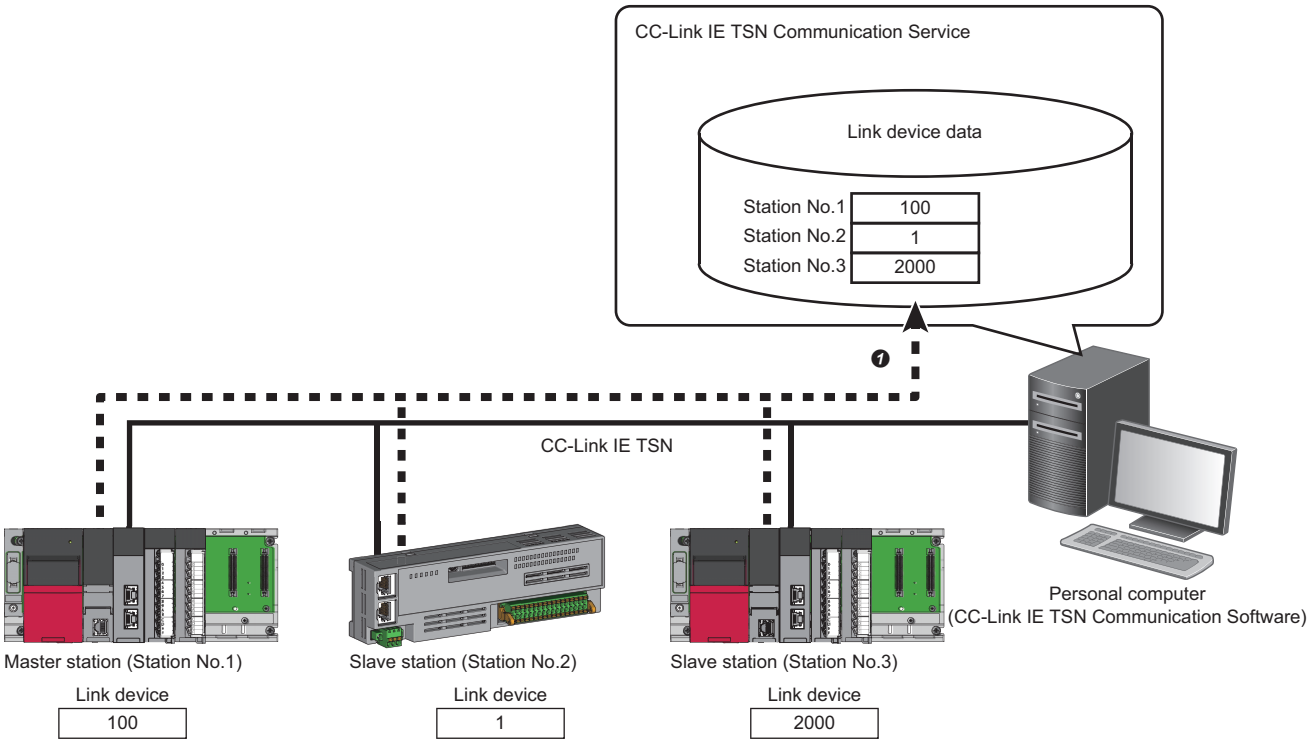

❶ CC-Link IE TSN Communication Service receives link device data sent from the CC-Link IE TSN master station.

Link device data reception interval

CC-Link IE TSN Communication Service receives link device data in the cyclic cycle of the master station.

Data missing

The term 'missing' indicates that CC-Link IE TSN Communication Service failed to perform reception processing because a part or all of the received link device data is missing. Link device data received last time is retained for the missing data.
Data missing occurs by the following cases:

- Failed to receive data as processing function of personal computer could not catch up with the collection speed.
- Failed to receive link device data due to the disconnection of slave stations or other reasons.

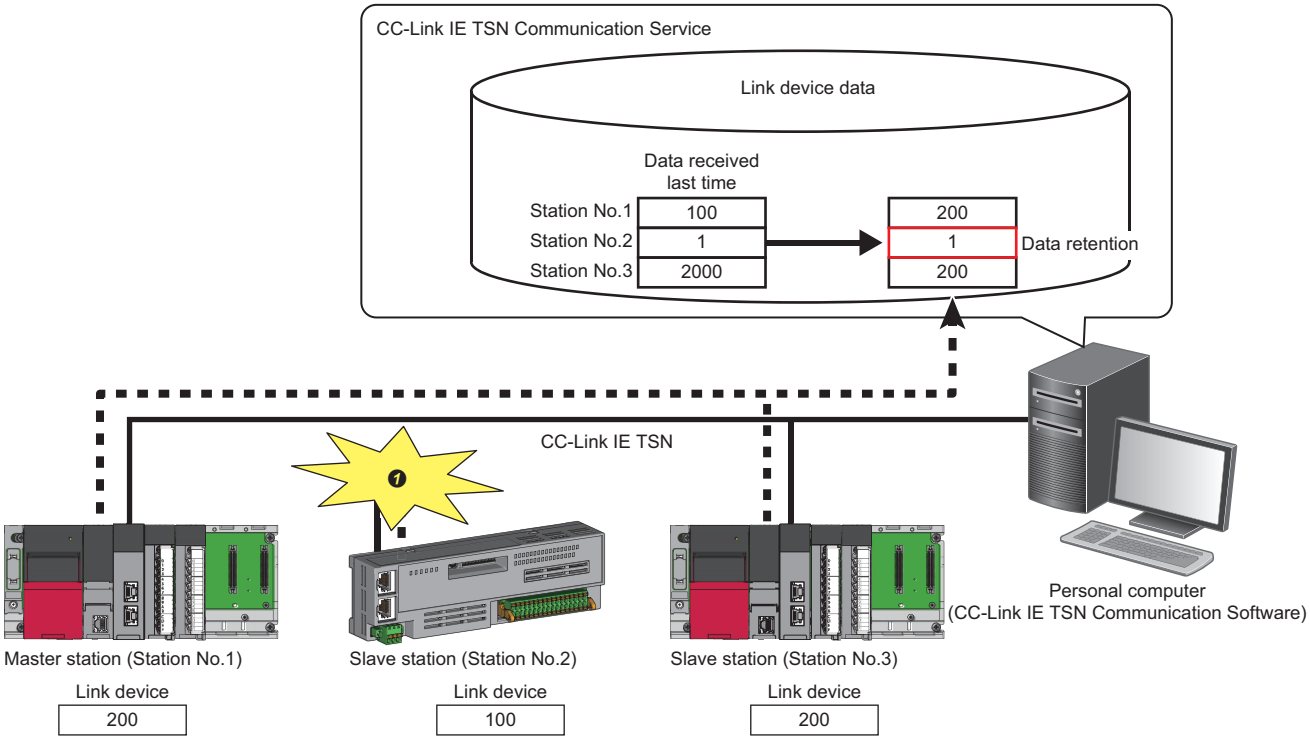

❶ The last received link device data is retained because a CC-Link IE TSN slave station (station No.2) is disconnected and CC-Link IE TSN Communication Service fails to receive link device data of the slave station.

Operation when a network error occurs

The following table shows the operation of CC-Link IE TSN Communication Service when a network error occurs.

Error type	Detection condition	Operation when error detected
Master station data link error	The number of times that CC-Link IE TSN Communication Service fails to receive cyclic data from the master station exceeds the number of times set for disconnection detection setting of the master station.	The data just before a network error is detected is retained.
Slave station data link error	The number of times that CC-Link IE TSN Communication Service fails to receive cyclic data from each slave station exceeds the number of times set for disconnection detection setting of the master station.	

Disconnect detection setting and data link error status of each station can be checked in special registers.

- Disconnection detection setting (SW1021)
- Data link status of each station (SW00B0 to SW00B7)

For details on special registers, refer to the following:

☞ Page 50 List of Link Special Registers (SW)

Precautions

- When an Ethernet adapter is disabled, link device data is not retained and is cleared to zero.
- Performing processing that increases a Windows CPU load affects the link device data reception function; it may cause data missing.

2.2 Link Device Data Access Function

This function accesses link device data which is stored in the buffering area or snapshot data storage area.
Snapshot data and buffering data can be read.

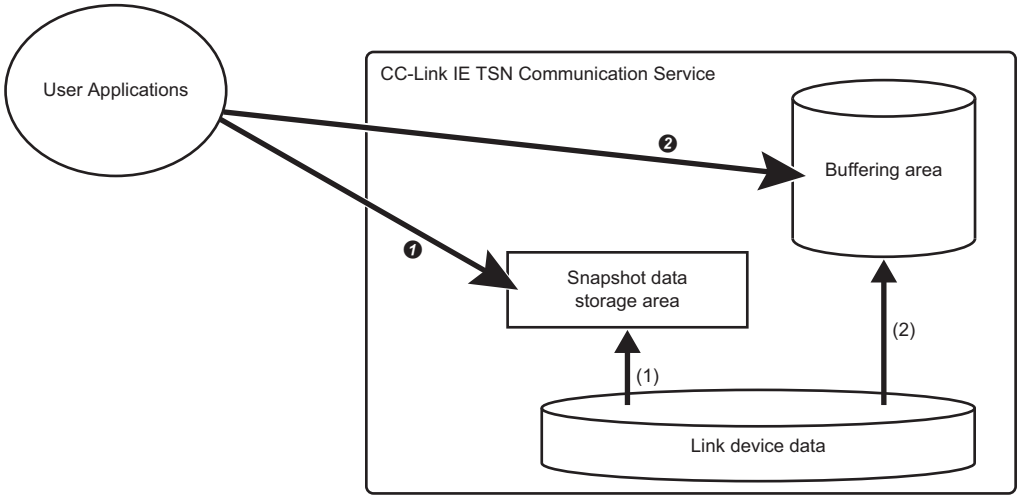

(1) Stores link device data in the snapshot data storage area.
(2) Stores link device data in the buffering area.

Item		Description
❶	Reading snapshot data	Reads link device data from the snapshot data storage area.
❷	Reading buffering data	Reads link device data from the buffering area.

Storing data in the snapshot data storage area

Link device data is stored in the snapshot data storage area for each cyclic cycle.
It is stored at the timing when the CC-Link IE TSN Communication Service receives link device data for one cyclic cycle.
(☞ Page 11 Link Device Data Reception Function)

Storing data in the buffering area

Link device data is stored (collected) in the buffering area according to the collection settings of buffering data.
Data is stored in the buffering area so that a user application can read consecutive data.

Reading snapshot data

Link device data which is stored in the snapshot data storage area[*1] is read for one cyclic cycle.

*1 The snapshot data storage area exists in each channel.

Reading data

Use CC-Link IE TSN Communication Library to read link device data.

■ CC-Link IE TSN Communication Library

The following table shows methods used for reading data.

Method	Description
ReadDeviceBlock	Batch reads devices.
ReadDeviceRandom	Reads devices randomly.
ReadDevice	Reads one point of device.

For details on methods, refer to the following:

CC-Link IE TSN Communication Software for Windows Programming Manual

Precautions

When executing the snapshot data assurance, the snapshot data storage area will not be updated until the data assurance ends. (☞ Page 22 Snapshot data assurance (multiple method assurance))

Acquiring data time stamps

When CC-Link IE TSN Communication Service receives link device data, the time when link device data is sent on the network is added as a time stamp.

The following shows the types of time which can be handled.

Type	Description
UTC	A world standard time (UTC time managed by a master station)
Network time	A time common to each station in a network

A time stamp can be checked by special registers.

- UTC: Link device transmission time (SW1000 to SW1004)
- Network time: Link device transmission network time (SW101A to SW101E)

For details on special registers, refer to the following:

☞ Page 50 List of Link Special Registers (SW)

Point

Network time is a synchronized time among stations on CC-Link IE TSN. It can be used for handling data at a regular interval, such as data analysis etc., because the time is not corrected during communication.
UTC is the UTC time managed by the master station and is used for confirming time of the whole system. However, the UTC time cannot be used for handling data at a regular interval because some master stations correct the time during communication.

Data missing information

Data missing may occur when CC-Link IE TSN Communication Service receives link device data.
For details on data missing, refer to the following:
☞ Page 12 Data missing

■ Checking missing information

When link device data is missing, '1: Data missing' is stored in 'Link device data reception status' (SW1010 to SW1017) so that the occurrence status can be checked in each station.
For details on special registers, refer to the following:
☞ Page 50 List of Link Special Registers (SW)

Point

Since the data collection processing time varies depending on the load on a network and the status of connected devices, data may not be collected at a certain collection interval. To check whether link device data is received properly, check the value of 'Total number of data missing' (SW1024) periodically in "Device Monitor" and ensure that the value does not increase.

Precautions

'Link device data reception status' (SW1010 to SW1017) is updated in each cyclic cycle. Therefore, users may not be able to check the occurrence status of data missing because the reception status is updated after link device data is read. To check the occurrence status, read 'Link device data reception status' (SW1010 to SW1017) together with target link device data.

■ When reading devices randomly

Read 'Link device data reception status' (SW1010 to SW1017) together with target link device data.

■ When reading devices in a batch or one point of device

Use snapshot data assurance to ensure that the snapshot data storage area is not updated until target link device data and 'Link device data reception status' (SW1010 to SW1017) are read. (☞ Page 22 Snapshot data assurance (multiple method assurance))

Operation when a network error occurs

For details, refer to the following:
☞ Page 12 Operation when a network error occurs

Considerations

Performing processing that increases a Windows CPU load affects the link device data access function; it may cause data missing.

Reading buffering data

Link device data which is accumulated in the buffering area[*1] is read.

*1 The buffering area exists in each channel.

Buffering data is read each time when a communication line is opened.

Collecting and reading data

Use CC-Link IE TSN Communication Library to collect and read data.

■ CC-Link IE TSN Communication Library

The following table shows methods used for collecting and reading data.

Method name	Description
SetBufferingDataRecipe	Configures buffering data collection settings.
StartBuffering	Starts buffering.
StopBuffering	Stops buffering.
ReadBufferingData	Acquires buffering data.
WaitBufferingDataEvent	Waits for buffering data to be accumulated.

For details on methods, refer to the following:

CC-Link IE TSN Communication Software for Windows Programming Manual

■ Registering a target device and securing the buffering area

A specified device is registered and buffering area for the size of the specified number of records is secured by executing the SetBufferingDataRecipe method.

A buffering area, which can be secured for an opened communication line, is calculated with the following formula (maximum 320 MB):

- (The size of one record) × (the number of records specified when executing the SetBufferingDataRecipe method)

■ Starting collection

Collecting link device data into the buffering area is started by executing the StartBuffering method.

Data is collected at the same timing with the reception of link device data. However, the initial data collection is performed in the first cyclic cycle after the collection is started. (☞ Page 19 Specifying collection timing)

■ Stopping collection

Collecting link device data into the buffering area is stopped by executing the StopBuffering method.

Data which is stored in the buffering area is retained even after data collection is stopped.

Retained data is deleted by the following cases:

- Changing buffering data collection settings using the SetBufferingDataRecipe method
- Restarting data collection using the StartBuffering method

■ Canceling data collection

Data collection is canceled by the following triggers:

Trigger	Description
Stop due to network disconnection of all stations	Stops collecting data due to the disconnection of all stations from a network.
Link-down detection due to cable disconnection	Stops collecting data due to link-down detection.
Stop due to disabling an Ethernet adapter	Stops collecting data when the Ethernet adapter on personal computer is disabled.
Occurrence of error which stops the CC-Link IE TSN Communication Service operation	Stops collecting data when an error which stops the CC-Link IE TSN Communication Service operation occurs.

Data collection is stopped after data is collected at the timing when any of the triggers are detected. Data which is stored in the buffering area is retained even after the collection is stopped; therefore, the data can be read by the ReadBufferingData method. However, an error occurs if there is no data in the buffering area.

Restart data collection and change buffering collection settings after stopping the data collection using the StopBuffering method.

■ Buffering area overflow

When the buffering area becomes full that data is no longer stored, the buffering area overflows.

If such overflow occurs, CC-Link IE TSN Communication Service will take the following actions:

- Overflowed data is discarded.
- The 'Buffering data overflow status' (SB1000) turns ON at the next buffering after the buffering area overflow is solved.

For details on special relays, refer to the following:

☞ Page 49 List of Link Special Relays (SB)

Point

After executing the StartBuffering method, the buffering area becomes full at the time calculated by the equation as shown below; therefore, data which is collected beyond the calculated time is not stored. To store data continuously, execute the ReadBufferingData method before the buffering area becomes full to secure a free space in the area.

- Time when the buffering area becomes full: The number of records collected into the buffering area × Collection cycle

Set the time that is calculated by 'Time when the buffering area becomes full ÷ 2' as the maximum value, and adjust user programs so that the ReadBufferingData method is executed periodically at appropriate intervals for the system. To suppress the occurrence of buffering area overflow in the Windows environment, set the interval for running the ReadBufferingData method to at least 100 ms or more.

Method of data acquisition

The following shows the method for collecting data from link device data to the buffering area and acquiring the collected data.

■ Polling

Data can be read from the buffering area at fixed timing.

1. Starting data collection

Execute the StartBuffering method to start data collection into the buffering area.

2. Reading collected data

Execute the ReadBufferingData method to read data from the buffering area.

■ Event-driven

Data can be read from the buffering area at the time when data for the specified number of records is collected.

1. Starting data collection

Execute the StartBuffering method to start data collection into the buffering area.

2. Waiting for data to be collected

Execute the WaitBufferingDataEvent method to wait for data for the specified number of records to be collected into the buffering area.

3. Reading collected data

Execute the ReadBufferingData method to read the collected data.

Acquiring data time stamps

For details, refer to the following:

☞ Page 14 Acquiring data time stamps

Data missing information

To check the occurrence of data missing, collect 'Link device data reception status' (SW1010 to SW1017) together with target link device data.

For details, refer to the following:

☞ Page 15 Data missing information

Operation when a network error occurs

For details, refer to the following:

☞ Page 12 Operation when a network error occurs

Considerations

Performing processing that increases a Windows CPU load affects the link device data access function; it may cause data missing.

Specifying collection timing

Collection timing can be specified for each buffering area by using the SetBufferingDataRecipe method.

■ Collecting in cyclic cycle

Data is collected in the cyclic cycle.

Therefore, data can be collected without missing changes in devices whose data is transmitted and received.

■ Collecting at specified time

Data is collected at the specified time interval.

Data is collected in the first cyclic cycle after the specified time interval elapsed.

Data is initially collected in the first cyclic cycle after starting data collection, regardless of the specified time interval.

Ex.

When the collection interval is 5 ms and cyclic cycle is 1.8 ms

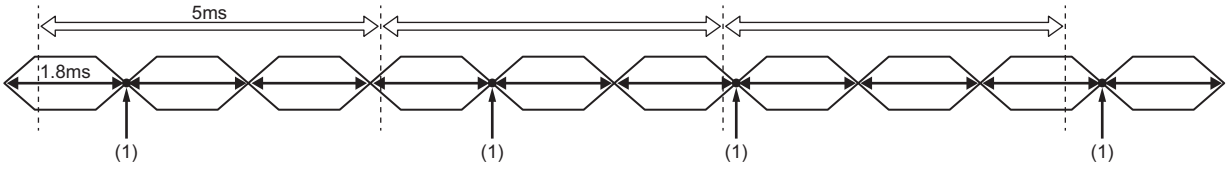

⟺ Collection interval

⟷ Cyclic cycle

(1) Collection timing

A collection interval can be specified longer than that of a cyclic cycle; therefore, the amount of data stored in the buffering area can be suppressed.

2.3 Data Assurance Function

This function prevents data inconsistency when accessing link device data from a user application.

For details on the link device data access function, refer to the following:

☞ Page 13 Link Device Data Access Function

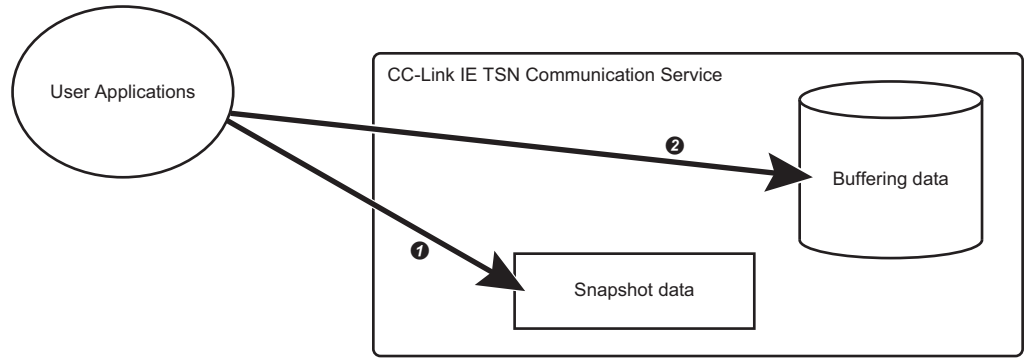

❶Reading snapshot data
❷Reading buffering data

Point

Data assurance function is to assure access to link device data received by CC-Link IE TSN Communication Service. It is not intended to be used to assure data for one cyclic cycle.

If CC-Link IE TSN Communication Service fails to receive link device data for one cyclic cycle, data missing will occur.

For details on data missing, refer to the following:

☞ Page 12 Data missing

Types of data assurance

There are the following types of data assurance:

Assurance type	Description
32-bit unit assurance	Assures data in 32-bit units.
Single method assurance	Assures data when executing a method.
Snapshot data assurance (Multiple method assurance)	Assures data when executing multiple methods.

■ Available functions for data assurance

The following table shows functions that support data assurance.

○: Supported, ×: Not supported

Assurance type	Link device data access function	
	Reading snapshot data	Reading buffering data
32-bit unit assurance	○	○
Single method assurance	○	○
Snapshot data assurance (Multiple method assurance)	○	×

32-bit unit assurance

This assures data in 32-bit units from data inconsistency by reading data in 32-bit units.
The assurance is automatically performed when accessing link devices.
When assuring data exceeding 32 bits, use the following data assurance.
☞ Page 22 Snapshot data assurance (multiple method assurance)

Single method assurance

This assures data from data inconsistency for each method when executing a method.
The data assurance is automatically performed when accessing link devices of own station.

Snapshot data assurance (multiple method assurance)

This data assurance prevents data inconsistency when reading snapshot data.
Data is assured each time when a communication line is opened.
When executing multiple methods, data inconsistency occurs because data is accessed across cyclic cycles while methods are running. By executing this data assurance, it stops updating data in the snapshot data storage area and prevents the occurrence of data inconsistency in read data.

Data assurance flow

By stopping updating data in the snapshot data storage area, snapshot data assurance assures snapshot data in the storage area.
The following shows an example for reading data of link devices (0H to 5H) in the snapshot data storage area to the area (90H to 95H) secured by a user application by dividing into two sessions.

■ When not using snapshot data assurance (occurs data inconsistency)

Snapshot data is updated between the first and second reading. The updated data is read at the second reading.

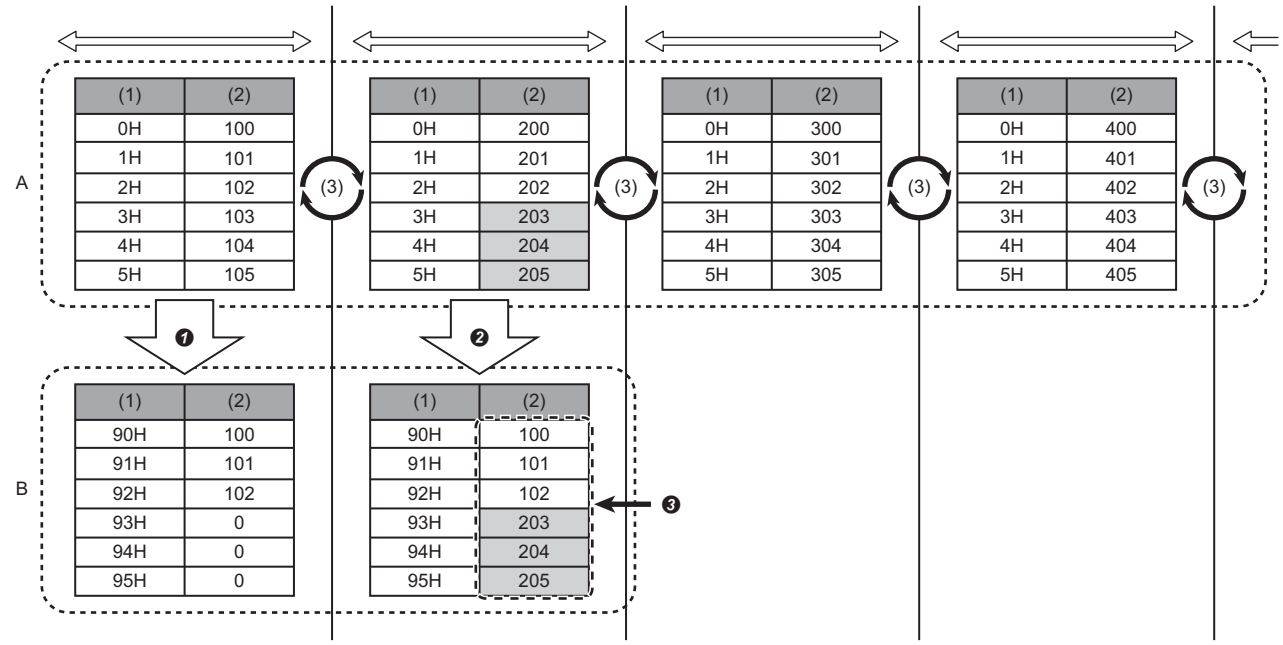

⟺ Cyclic cycle

A: Snapshot data storage area
B: Area secured by user applications
(1) Address
(2) Data
(3) Update of snapshot data

❶: Link device values of specified addresses (0H to 2H) are read (the first reading).
❷: Link device values of specified addresses (3H to 5H) are read (the second reading).
❸: Different values from the first reading are read because snapshot data is updated between the first and second reading. (Data inconsistency occurs.)

■ When using snapshot data assurance (prevents data inconsistency)

By starting the data assurance using the StartDataAssurance method before reading data, data is not updated between the first and second reading. Therefore, data of the same cycle as the first reading is read at the second reading.
Update of snapshot data is restarted by executing the EndDataAssurance method.

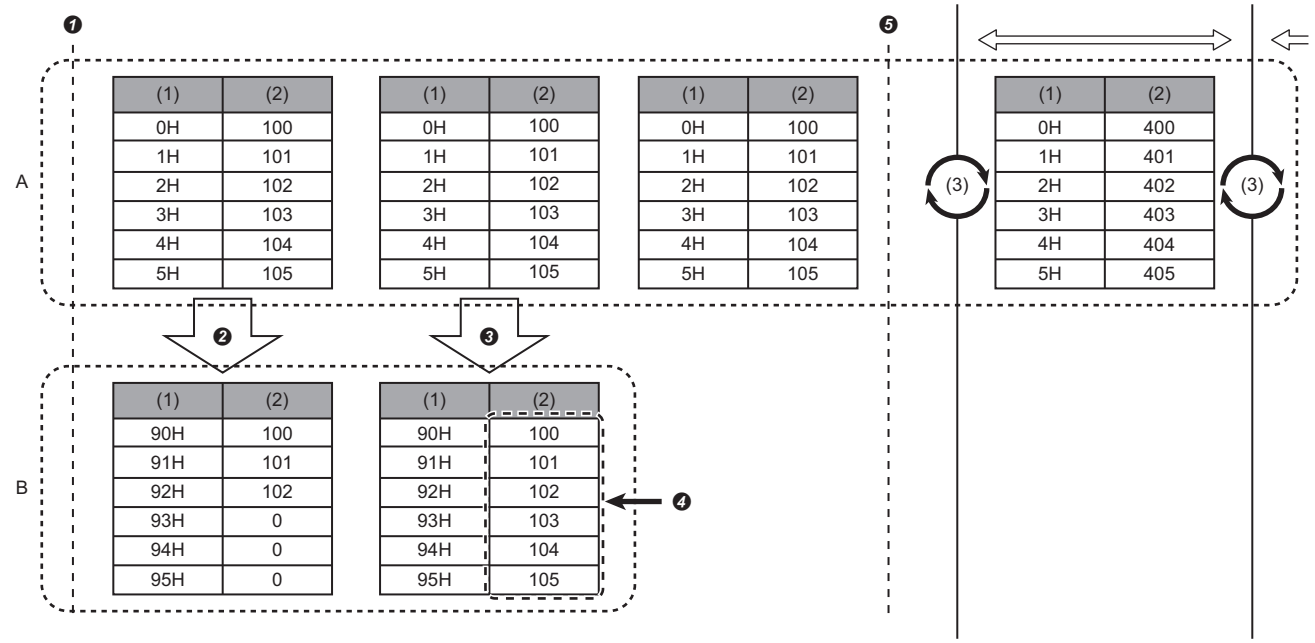

⟺ Cyclic cycle
A: Snapshot data storage area
B: Area secured by user applications
(1) Address
(2) Data
(3) Update of snapshot data

❶: The StartDataAssurance method runs and snapshot data assurance starts. (Update of snapshot data is stopped.)
❷: Link device values of specified addresses (0H to 2H) are read (the first reading).
❸: Link device values of specified addresses (3H to 5H) are read (the second reading).
❹: Same values as the first reading are read because snapshot data is not updated between the first and second reading. (Data inconsistency does not occur.)
❺: The EndDataAssurance method runs and snapshot data assurance ends. (Update of snapshot data is restarted.)

Executing assurance

Use CC-Link IE TSN Communication Library for snapshot data assurance.

■ CC-Link IE TSN Communication Library

The following table shows methods used for snapshot data assurance.

Method name	Description
StartDataAssurance	Starts data assurance. (Update of snapshot data is stopped.)
EndDataAssurance	Ends data assurance. (Update of snapshot data is restarted.)

For details on methods, refer to the following:
📖CC-Link IE TSN Communication Software for Windows Programming Manual

3 SYSTEM CONFIGURATION

This chapter explains the system configuration to run this product.

3.1 Overall Configuration

This product collects link device data from connected devices on CC-Link IE TSN.
However, data cannot be collected from the following devices: devices on Ethernet (such as a server and personal computer), and devices (such as Ethernet devices and partner products) that are connected beyond a TSN switching hub or remote stations on CC-Link IE TSN.

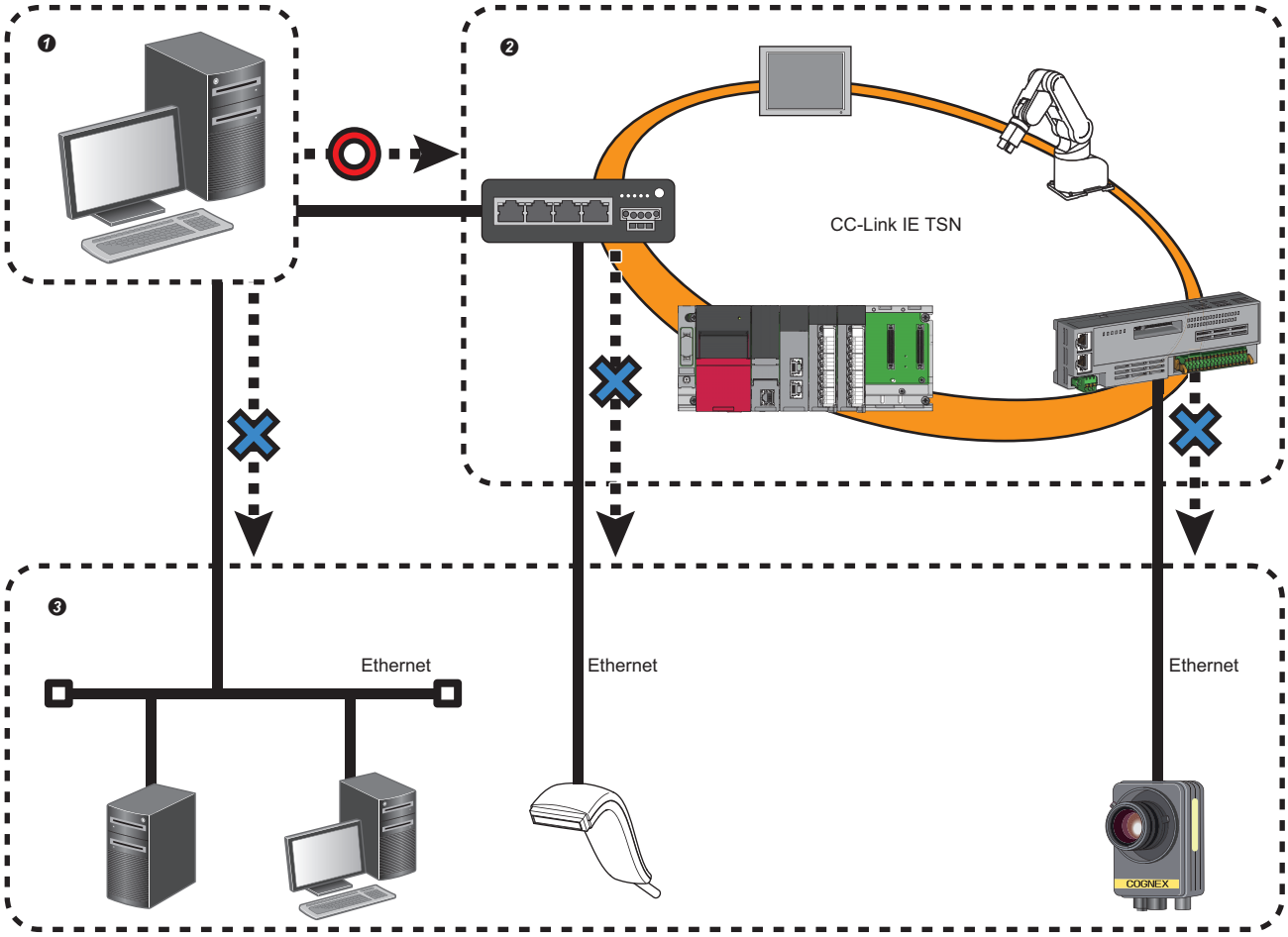

❶ Personal computer (CC-Link IE TSN Communication Software)
❷ Available to collect data
❸ Not available to collect data (personal computer, server, Ethernet devices, partner products etc.)

3.2 Network Configuration

This section explains the methods for connecting this product with CC-Link IE TSN and the number of products that can connect to a network.

Point

The system configuration is equivalent to that of local stations (CCIETSN authentication Class B).
For the system configuration of local stations (CCIETSN authentication Class B), refer to the following:
MELSEC iQ-R CC-Link IE TSN User's Manual (Startup)

Line topology

Available to connect this product to the end of the network (maximum two products in the same network)

❶ This product

Star topology

Available to connect this product for the number of free ports on a TSN switching hub (maximum two products in the same network)

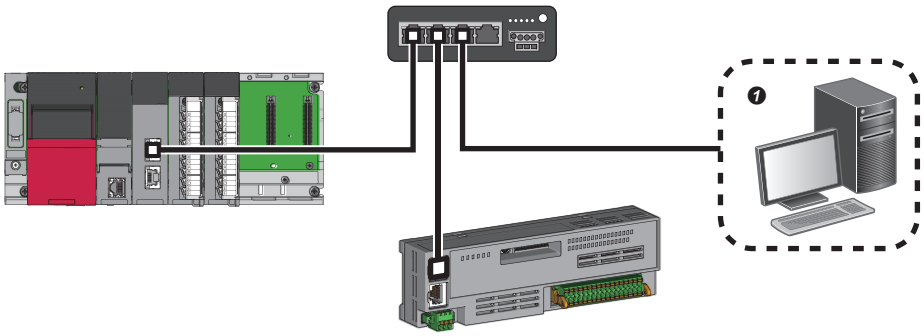

❶ This product

Coexistence of line and star topologies

Available to connect this product to the end of the network (maximum two products in the same network)

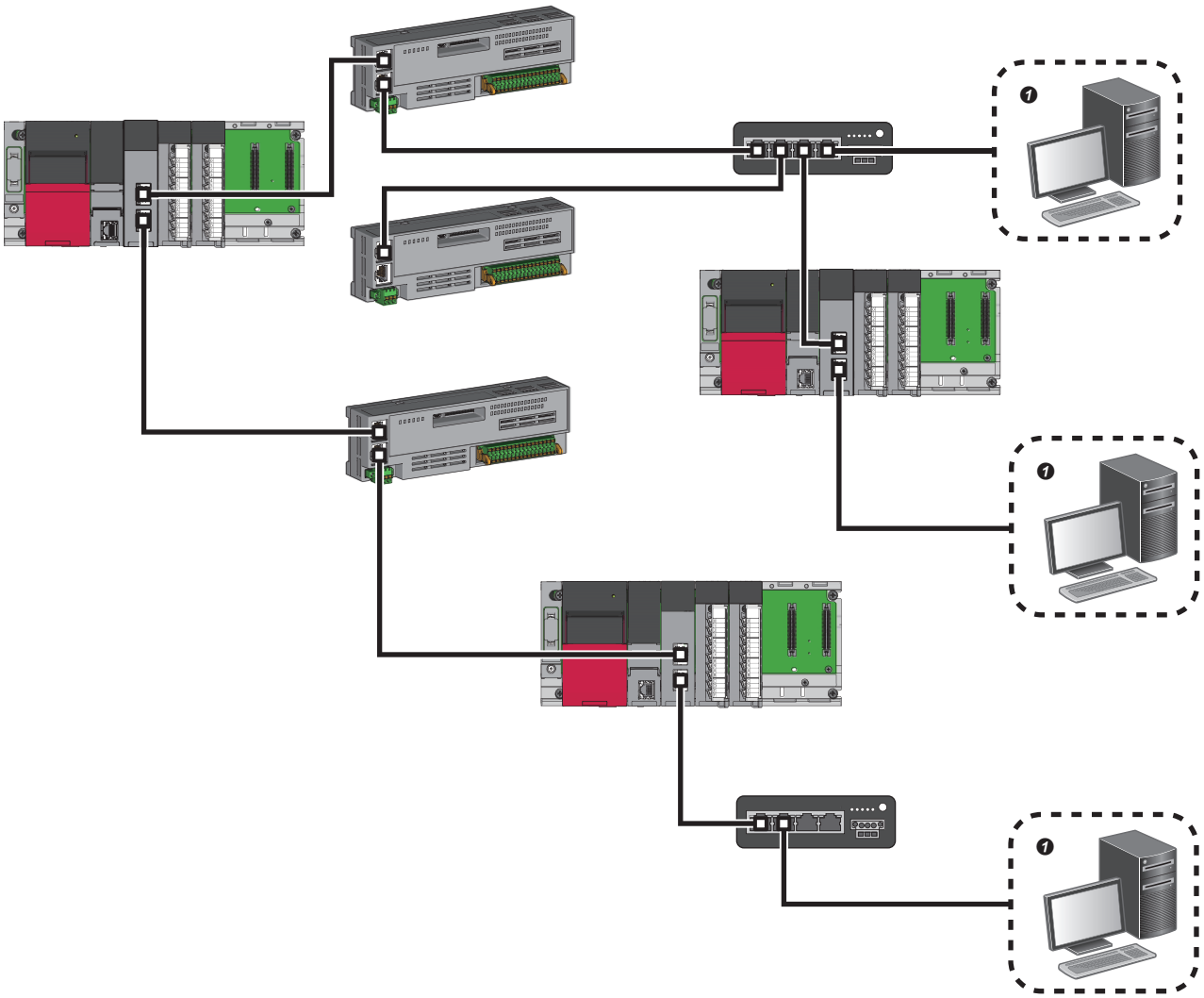

❶ This product

3.3 Connectable Devices

This section explains devices used to comprise CC-Link IE TSN.

Connected devices must satisfy the following conditions:

Device	Specification
Master station	Master/local module (RJ71GN11-T2)*1
Slave station	CC-Link IE TSN device
Industrial switching hub	CC-Link IE TSN authentication Class B device

*1 Use a module the firmware version of which is '12' or later.

Ethernet cables

Use Ethernet cables that meet the following standards.

Communication speed	Type	Connector	Standard
1Gbps	Category 5e or higher, straight cable (shielded, STP)	RJ45 connector	The following conditioning cables: • IEEE802.3(1000BASE-T) • ANSI/TIA/EIA-568-B(Category 5e)

Cables for CC-Link IE TSN are available from Mitsubishi Electric System & Service Co., Ltd. (Catalogs for cables are also available.)

Communication speed	Type	Model (Manufacturer)
1Gbps	Category 5e or higher, straight cable (double shielded, STP)	SC-E5EW series (Mitsubishi Electric System & Service Co., Ltd.)

In addition, the connector processing of cable length is available for your preference. Please consult your local Mitsubishi representative.

3.4 Considerations

This section explains the considerations for using this product.

Ring topology

This product is not compatible with ring topology. This product will not operate if it is connected to the system of ring topology.

Ethernet adapter to which multiple IP addresses are assigned

When multiple IP addresses are assigned to an Ethernet adapter, the IP addresses are compared in the order of the first octet → second octet → third octet → fourth octet, and the IP address with the smallest setting (value) is used.

Ex.

When adding the IP address of '192.168.3.100' to the Ethernet adapter for which '192.168.4.133' is valid, the IP address of '192.168.3.100' will be used for this product.

CCIETSN authentication Class A remote station

Do not connect this product and CCIETSN authentication Class A remote stations to the same switching hub.
Otherwise, CCIETSN authentication Class A remote stations repeat disconnection and reconnection which may affect the control of the remote stations.

Use of USB to LAN conversion adapter

- When using a USB to LAN conversion adapter, use the adapter which is compatible with USB3.0. Otherwise, this product may not operate properly.
- When connecting multiple USB devices to a personal computer using a USB hub, it may cause data loss because the personal computer cannot import data which is received from a USB to LAN conversion adapter. To check whether data is received properly in the usage environment, check the value of 'Total number of data missing' (SW1024) periodically in "Device Monitor" and ensure that the value does not increase.

4 PROCEDURES BEFORE OPERATION

This chapter explains the procedure from start-up to operation of this product.

1. Installing this product

Install this product on a personal computer.

For the installation procedure and the operating environment of this product, refer to the following:

📖 CC-Link IE TSN Communication Software Installation Instructions

2. Wiring and connecting system components

Connect the personal computer on which this product is installed to CC-Link IE TSN. (☞ Page 24 SYSTEM CONFIGURATION)

3. Setting parameters

Set parameters of this product. (☞ Page 33 Setting Parameters)

4. Checking running status

Check that CC-Link IE TSN Communication Service is running properly. (☞ Page 34 Checking Running Status)

5. Developing user applications

Develop user applications by using CC-Link IE TSN Communication Library.

For details on programming, refer to the following:

📖CC-Link IE TSN Communication Software for Windows Programming Manual

6. Placing user applications

Place created programs into the personal computer.

Precautions

After connecting the personal computer to CC-Link IE TSN, execute a ping to the CC-Link IE TSN master station before checking the operation of this product to check if there is any problem in connection with the master station.

MEMO

5 CC IE TSN Communication Software Utility

Running statuses of CC-Link IE TSN Communication Software and settings which are necessary for the software operation can be checked in CC IE TSN Communication Software Utility.

5.1 Screen Configuration and Basic Operations

This section explains the screen configuration and basic operations of CC IE TSN Communication Software Utility.

Start and end

The following explains the methods for starting and ending CC IE TSN Communication Software Utility.

Start

Operating procedure

Select [MELSOFT] ⇨ [CC IE TSN Communication Software Utility] from Windows Start.

Precautions

Maximum one CC IE TSN Communication Software Utility can be activated.

End

Operating procedure

Select [View] ⇨ [Exit CC IE TSN Communication Software Utility].

Display language switching

CC IE TSN Communication Software Utility supports multiple languages, and therefore the display language such as one on the menu can be switched on a personal computer.

Window

Select [View] ⇨ [Switch Display Language].

Menu list

[View]	
⇨ [Event Log] ⇨ [Channel 201]	☞ Page 39 Checking with event log
⇨ [Event Log] ⇨ [Channel 202]	
⇨ [Switch Display Language]	☞ Page 31 Display language switching
⇨ [Exit CC IE TSN Communication Software Utility]	☞ Page 31 End
[Operation]	
⇨ [Restart Communication Service] ⇨ [Channel 201]	To restart the selected channel of CC-Link IE TSN Communication Service.
⇨ [Restart Communication Service] ⇨ [Channel 202]	
[Tool]	
⇨ [Parameter Setting]	☞ Page 33 Setting Parameters
⇨ [Device Monitor]	☞ Page 36 Device Monitor (CC-Link IE TSN Communication Software)
[Help]	
⇨ [CC-Link IE TSN Communication Software Help]	—
⇨ [Connection to MITSUBISHI ELECTRIC FA Global Website]	—
⇨ [Version Information]	—

5.2 Setting Parameters

This section explains the method of setting parameters.

Window

Select [Tool] ⇨ [Parameter Setting]

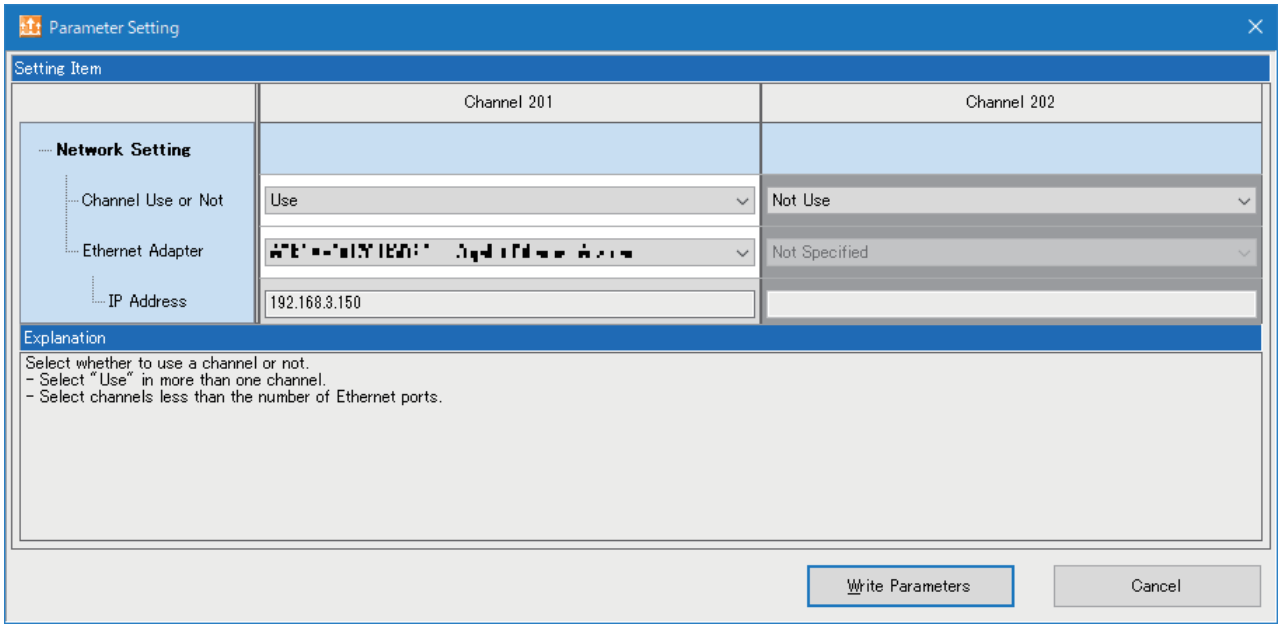

Displayed items

Item		Description	Setting range
Channel Use or Not		Select whether to use a channel or not. • Select "Use" in more than one channel. • Select channels less than the number of Ethernet ports.	• Not Use • Use
Ethernet Adapter	—	Select an Ethernet adapter to be used in the channel. • Set a different Ethernet adapter for each channel.	Any available adapters
	IP Address	The IP address of the selected Ethernet adapter is displayed.*1	—
[Write Parameters] button		Click this to write parameters to each channel of CC-Link IE TSN Communication Service.	—

*1 When multiple IP addresses are assigned, the IP addresses are compared in the order of the first octet → second octet → third octet → fourth octet, and the IP address with the smallest setting (value) is used. (☞ Page 28 Ethernet adapter to which multiple IP addresses are assigned)

Point

- When parameters are already written, the written parameters will be displayed on the screen.
- When writing parameters while CC-Link IE TSN Communication Service is running, it may take about one minute for the service to run after writing the parameter.

5.3 Checking Running Status

CC IE TSN Communication Software Utility can check the network condition of CC-Link IE TSN, the running status of the CC-Link IE TSN Communication Service, and the communication status of each station.

Window

When activating CC IE TSN Communication Software Utility, the following monitor screen is displayed.
Channels of which "Use" is selected for "Channel Use or Not" are displayed in the screen. (☞ Page 33 Setting Parameters)

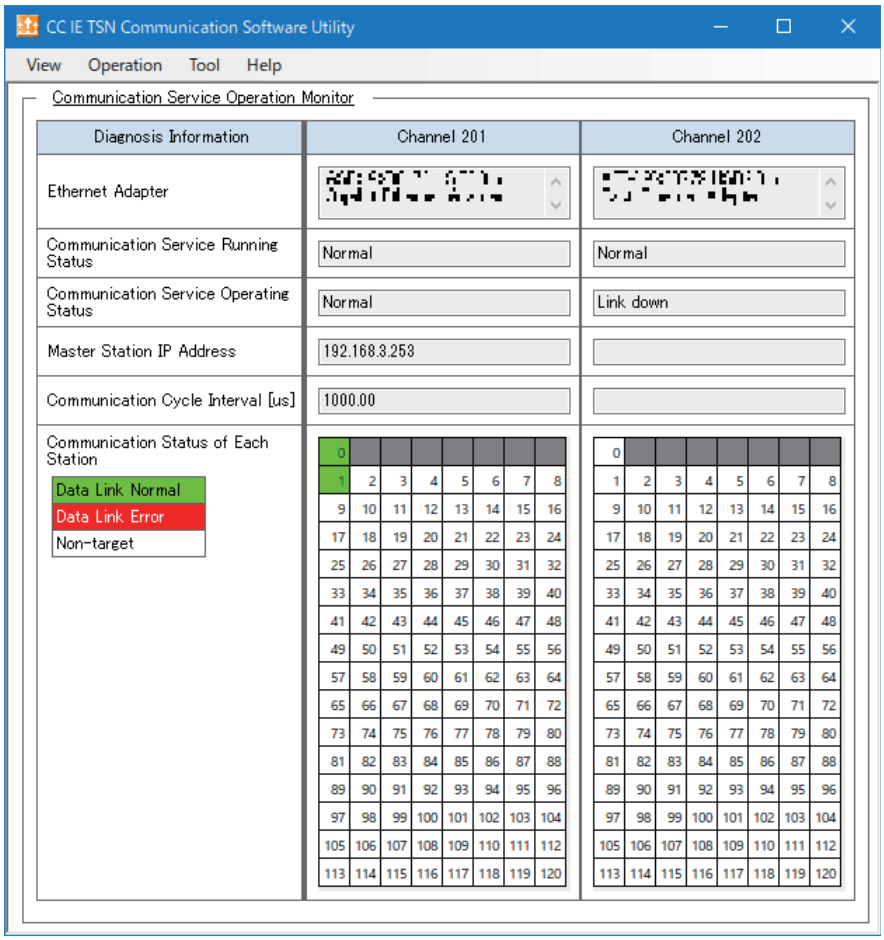

Point

When activating CC IE TSN Communication Software Utility at the first time, the "Parameter Setting" screen will be displayed at the start-up. The communication service operation monitor screen will be displayed from the next activation. (☞ Page 33 Setting Parameters)

Displayed items

Item	Description
Ethernet Adapter	An Ethernet adapter which is assigned to each channel is displayed.
Communication Service Running Status	The running status of communication service in each channel is displayed. • Not started: Communication service is not started • Normal: Operating normally
Communication Service Operating Status	The operation status of communication service in each channel is displayed. • Being prepared: Communication service start-up is in progress • Normal: Communication service is in normal operation • Stopped by error: Communication service is stopped due to an error • Link down: An operation port of communication service is in link-down status
Master Station IP Address	The IP address of a CC-Link IE TSN master station to be collected is displayed.
Communication Cycle Interval [us]	A setting value of the communication cycle interval, which is set in module parameters of the master station, is displayed.
Communication Status of Each Station	The data link status of each station to be collected on CC-Link IE TSN is displayed. The status varies depending on the displayed colors of background and text as shown below: • Data link normally operating station: Black text with green background • Data link faulty station: White text with red background • Station that is not set in parameters: Black text with white background

■ "Stopped by error" is displayed in "Communication Service Operating Status"

The causes are as follows:

- Master station connection preparation error: Master station denies or ignores connection to the communication service for 60 seconds due to the excess number of connected devices.
- Master station connection status error: Cyclic frames are not received from a master station for 15 seconds due to disconnection during data collection.
- Stopped by service error: Communication service is stopped due to an internal error in the communication service.
- A set Ethernet adapter is not found.
- An IP address of Ethernet adapter is changed during operation.

Precautions

To monitor, diagnose, or test the CC-Link IE TSN network status, perform a CC-Link IE TSN diagnosis of GX Works3.

To troubleshoot errors occurred in CC-Link IE TSN Communication Software, refer to the following:

☞ Page 38 TROUBLESHOOTING

6 Device Monitor (CC-Link IE TSN Communication Software)

Device Monitor can monitor collected devices.

Window

1. Activate Device Monitor by any of the following methods:

- Select [Tool] ⇨ [Device Monitor] in CC IE TSN Communication Software Utility.
- Select [MELSOFT] ⇨ [Device Monitor (CC-Link IE TSN Communication Software)] from Windows Start.

2. Select a channel to monitor.

This setting is not required when using only one channel.

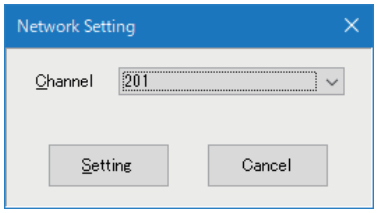

The device monitor screen is displayed.

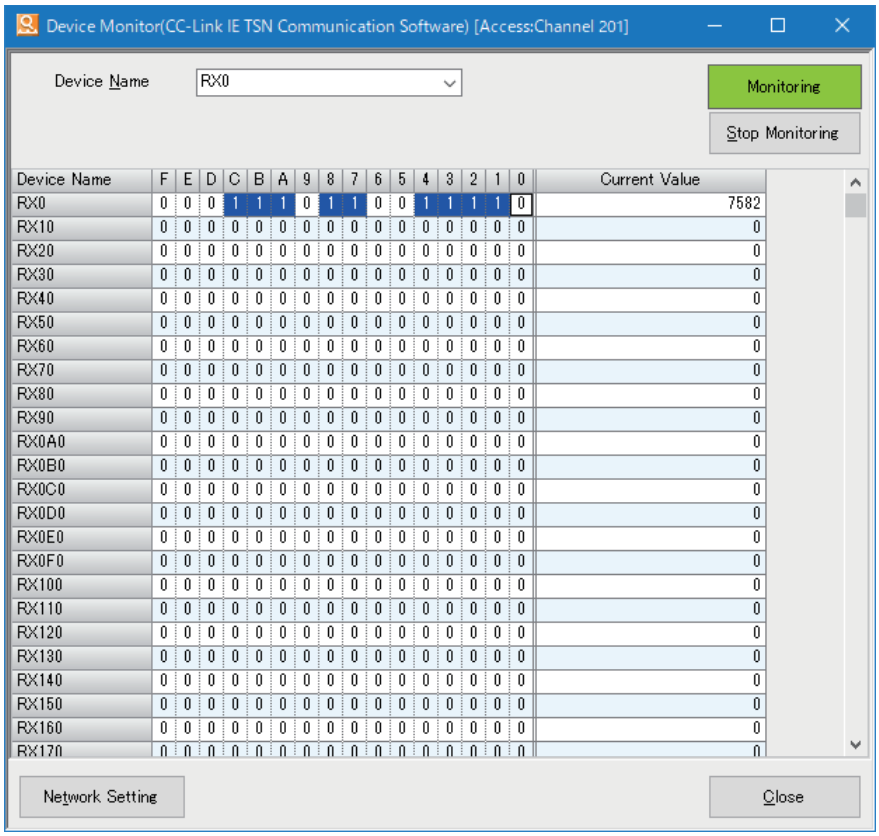

Device Name	F	E	D	C	B	A	9	8	7	6	5	4	3	2	1	0	Current Value
RX0	0	0	0	1	1	1	0	1	1	0	0	1	1	1	1	0	7582
RX10	0	0	0	0	0	0	0	0	0	0	0	0	0	0	0	0	0
RX20	0	0	0	0	0	0	0	0	0	0	0	0	0	0	0	0	0
RX30	0	0	0	0	0	0	0	0	0	0	0	0	0	0	0	0	0
RX40	0	0	0	0	0	0	0	0	0	0	0	0	0	0	0	0	0
RX50	0	0	0	0	0	0	0	0	0	0	0	0	0	0	0	0	0
RX60	0	0	0	0	0	0	0	0	0	0	0	0	0	0	0	0	0
RX70	0	0	0	0	0	0	0	0	0	0	0	0	0	0	0	0	0
RX80	0	0	0	0	0	0	0	0	0	0	0	0	0	0	0	0	0
RX90	0	0	0	0	0	0	0	0	0	0	0	0	0	0	0	0	0
RX0A0	0	0	0	0	0	0	0	0	0	0	0	0	0	0	0	0	0
RX0B0	0	0	0	0	0	0	0	0	0	0	0	0	0	0	0	0	0
RX0C0	0	0	0	0	0	0	0	0	0	0	0	0	0	0	0	0	0
RX0D0	0	0	0	0	0	0	0	0	0	0	0	0	0	0	0	0	0
RX0E0	0	0	0	0	0	0	0	0	0	0	0	0	0	0	0	0	0
RX0F0	0	0	0	0	0	0	0	0	0	0	0	0	0	0	0	0	0
RX100	0	0	0	0	0	0	0	0	0	0	0	0	0	0	0	0	0
RX110	0	0	0	0	0	0	0	0	0	0	0	0	0	0	0	0	0
RX120	0	0	0	0	0	0	0	0	0	0	0	0	0	0	0	0	0
RX130	0	0	0	0	0	0	0	0	0	0	0	0	0	0	0	0	0
RX140	0	0	0	0	0	0	0	0	0	0	0	0	0	0	0	0	0
RX150	0	0	0	0	0	0	0	0	0	0	0	0	0	0	0	0	0
RX160	0	0	0	0	0	0	0	0	0	0	0	0	0	0	0	0	0
RX170	0	0	0	0	0	0	0	0	0	0	0	0	0	0	0	0	0

Operating procedure

■ Monitoring devices

1. Enter a target device (start) in "Device Name."
2. Click the [Start Monitoring] button.

■ Changing a channel

1. Click the [Network Setting] button.
2. Select a channel to monitor in the "Network Setting" screen.

Precautions

- Maximum two screens of Device Monitor can be activated.
- Maximum one device can be monitored simultaneously per channel.

7 TROUBLESHOOTING

This chapter explains errors which may occur when using this product and the troubleshooting.

7.1 Troubleshooting Procedure

If any trouble occurs in this product, check causes in the following order.

1. Checking a return value (an error code) of CC-Link IE TSN Communication Library

For details on CC-Link IE TSN Communication Library, refer to the following:

CC-Link IE TSN Communication Software for Windows Programming Manual

2. Checking the running status of CC-Link IE TSN Communication Service

Check that "Normal" is displayed for "Communication Service Running Status" in CC IE TSN Communication Software Utility. (☞ Page 34 Checking Running Status)

If "Normal" is not displayed, check event logs and take a corrective action according to the displayed message. (☞ Page 39 Checking Event ID)

3. Checking troubleshooting by symptom

Check the corresponding symptoms from the following. (☞ Page 42 Troubleshooting by Symptom)

4. If trouble is not solved, take any of the following corrective actions:

- Restart the communication service in CC IE TSN Communication Software Utility.
- Write parameters in CC IE TSN Communication Software Utility.
- Restart the personal computer.
- Reinstall CC-Link IE TSN Communication Software.

If trouble is not solved by the actions above, please contact your local Mitsubishi Electric sales office or representative.

Point

When changing Ethernet adapter settings on Windows, the following symptoms may occur depending on the Windows specification.

- Ethernet adapter settings are temporary disabled.
- An Ethernet adapter is disabled until the next activation of Windows.

If any of these symptoms occur, take the corrective action described in 'Checking the running status of CC-Link IE TSN Communication Service.'

7.2 Checking Event ID

An event ID registered by CC-Link IE TSN Communication Service can be checked by the event log on CC-Link IE TSN Communication Software or Windows Event Viewer.
If multiple errors occur, check the order of the error occurrence (by occurrence time) and take corrective actions in the ascending order from the first error.

Point

To check all the errors that occurred in CC-Link IE TSN Communication Service, check them in the Event Viewer.

Event ID

The following shows type and range of event IDs.

Range	Type	Error description
0 to 4095	Information event	Information which is registered as a system log, such as a service startup.
4096 to 6143	Error event (Minor error)	An error such as communication failure. CC-Link IE TSN Communication Service continues running.
8192 to 12287	Error event (Moderate error)	An error such as parameter error, which affects the operation of CC-Link IE TSN Communication Service. CC-Link IE TSN Communication Service stops running.
15360 to 15871	Error event (Major error)	An error such as hardware failure or memory failure. CC-Link IE TSN Communication Service stops running.

Checking with event log

Window

[View] ⇨ [Event Log] ⇨ [Channel 201] or [Channel 202] in CC IE TSN Communication Software Utility

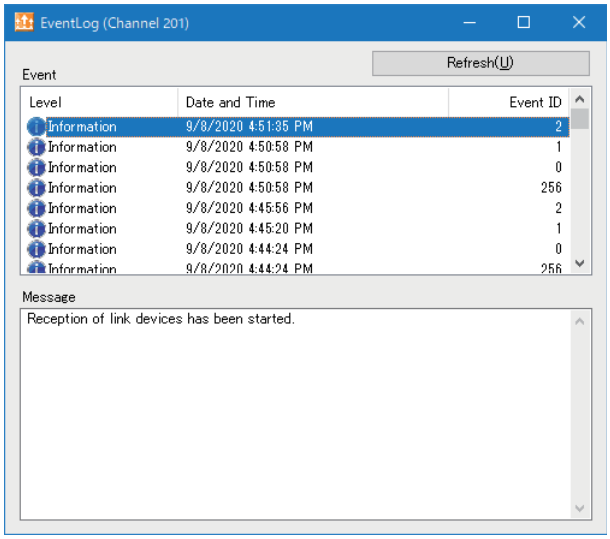

Displayed items

Item	Description
Event	A level, date and time, and event ID of an event log are displayed. Up to 100 events are displayed from the latest.
Message	A message of an event, which is selected in the "Event" section, is displayed.
[Refresh] button	Click this to obtain an event log again and display the latest information.

Checking with Event Viewer

Window

1. Windows Start ⇨ [Administrative Tools] ⇨ [Event Viewer]

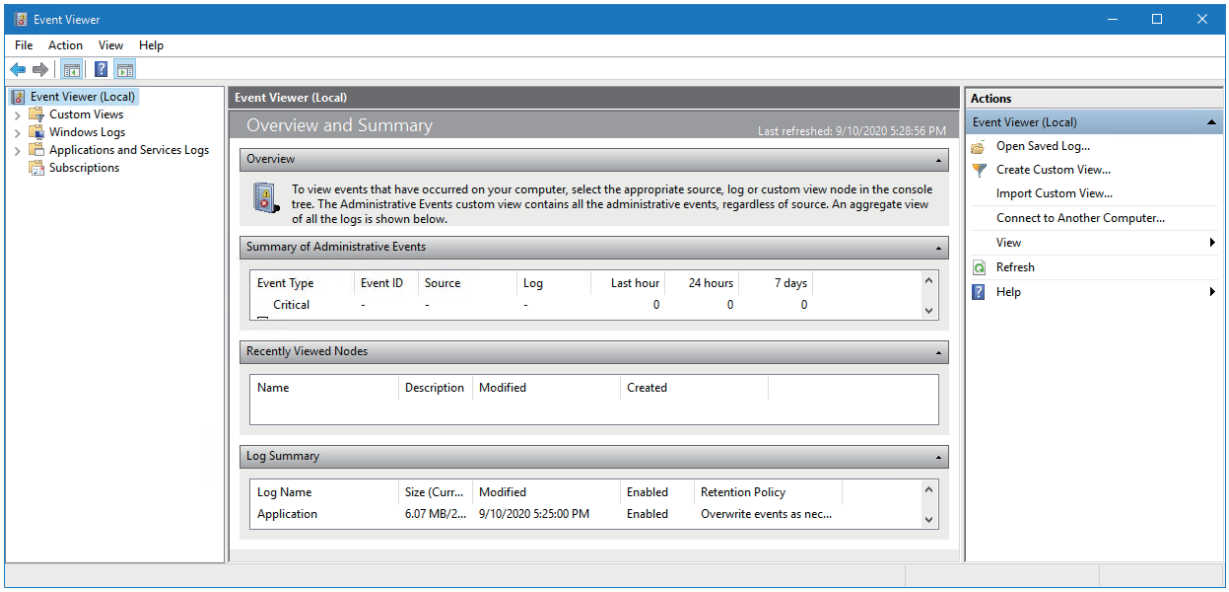

2. [Applications and Services Logs] ⇨ [CC IE TSN Communication Software 201] or [CC IE TSN Communication Software 202]

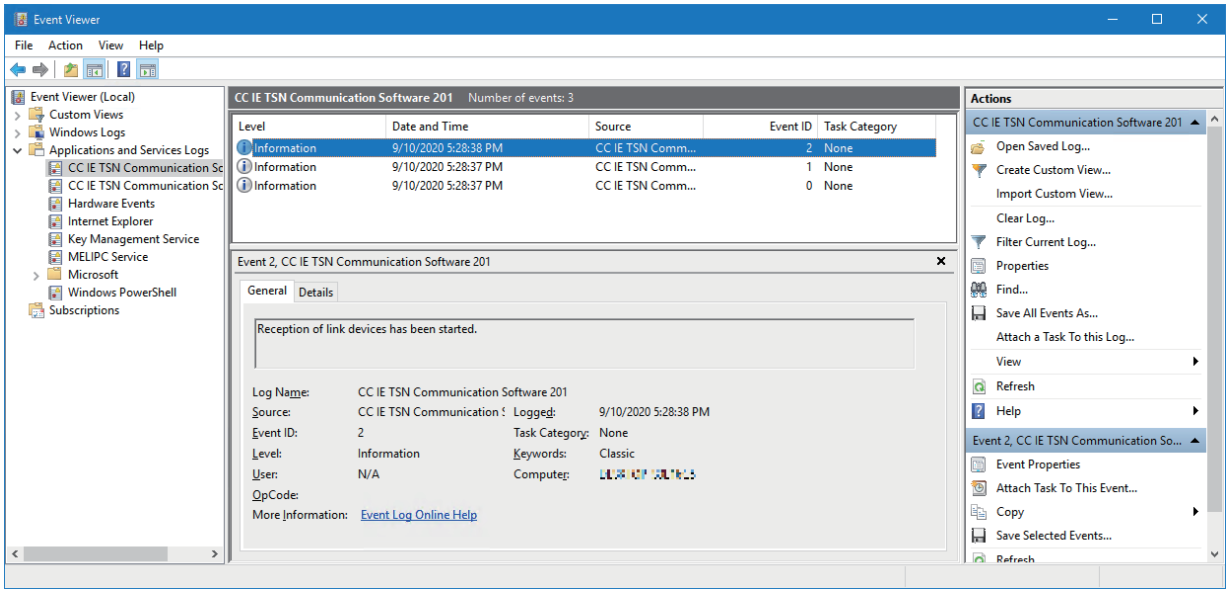

Displayed items

Item	Description
Dialog box	Detailed information about the error message and error cause is displayed.
Log Name	An event log name is displayed. An event log, which is generated in this product, is displayed as "CC IE TSN Communication Software ☐"[*1].
Source	The name of application that recorded the event to the log is displayed. The application name is displayed as "CC IE TSN Communication Software ☐"[*1].
Event ID	A unique number which is assigned to the event is displayed.
Level	An event log type is displayed. Any of the following events are displayed: ☞ Page 39 Event ID
User	The name of the user who wrote the event is displayed. (Fixed to "N/A")
OpCode	The operation that is performed when the event is generated by an application is displayed. This item is not displayed for an event log of "CC IE TSN Communication Software ☐"[*1].
More Information	"Event Log Online Help" is displayed.
Logged	The date and time of when the event is written is displayed.
Task Category	The category of the event is displayed. (Fixed to "None")
Keywords	"Classic" is displayed.
Computer	The computer name is displayed.

*1 ☐: Channel number

7.3 Troubleshooting by Symptom

If the function of this product does not perform properly, check the applicable items in the following and troubleshoot the error.

Troubleshooting on CC-Link IE TSN Communication Service

Symptom	Description	Corrective action
The operation status does not return to the normal state.	Are IP filter settings set to the master station?	Check the IP filter settings of the master station, and assign an accessible IP address to the Ethernet adapter being used.
	Is the master station disconnected?	Check if the master station is operating normally.
	Have any errors occurred in the master station?	
	Is the Ethernet cable connected to the personal computer where this product is running?	• Check if the Ethernet cable is connected properly. • Check if the other port is specified on the personal computer.
	Are there any problems with the connected Ethernet cable?	Replace the Ethernet cable and check that CC-Link IE TSN Communication Software runs properly.
	Is the Ethernet adapter on the personal computer enabled?	Enable the Ethernet adapter on the personal computer.
	Is the switching hub being used operating normally?	Turn the power of the switching hub from OFF to ON.
	Does the number of connected master stations exceed the maximum number of connectable master stations?	Check that the number of CC-Link IE TSN Communication Software connected to the same network is less than the maximum number of connectable master stations.
	Is this product connected to the end of network in line topology?	Review the network configuration to make the network configurable. For details on network configurations, check the specification of a master station to be connected.
	Is CC-Link IE TSN Communication Software connected in ring topology?	
	Is the IP address of Ethernet adapter for which "Use" is specified in parameters correct?	Set the IP address and subnet mask of the Ethernet adapter to make the network address of the IP address displayed in the "Parameter Setting" screen be the same as that of the master station.
	Are multiple IP addresses assigned to an Ethernet adapter?	Review the IP address setting of the Ethernet adapter so that the IP address with the smallest setting (value) is used by being compared with the IP addresses in the order of the first octet → second octet → third octet → fourth octet.
	Are the firewall settings of the personal computer blocking communications of this product?	Review the firewall settings to allow the communications.
	Is the description of Ethernet adapter 128 characters or more?	• Replace the adapter with the one whose description is less than 128 characters. • If the description of the adapter is set manually, change the description to less than 128 characters.
	Is the connected USB port appropriate when using a USB-LAN adapter?	• Connect to a USB3.0 port. • Connect to another USB port.
	Is the Ethernet adapter communicating at 1 Gbps or more?	Change Ethernet adapter settings to ensure that the adapter is communicating at 1Gbps. Alternatively, replace the Ethernet adapter.
	Does the version of Npcap[*1] included in this product match with the one has been installed on the personal computer?	Uninstall Npcap[*1] from Control Panel and install this product again.
	Is the Ethernet adapter operating normally?[*2]	• Replace the Ethernet adapter with another one. • For solutions when the Ethernet adapter does not work properly (such as when the Ethernet adapter does not link-up or does not receive data), consult the manufacturer of the Ethernet adapter being used.
Communication cycle interval is not correct.	Is the Ethernet adapter communicating faster than the communication speed of master station (1 Gbps/100 Mbps)?	Change Ethernet adapter settings to ensure the communication speed of Ethernet adapter be faster than that of the master station (1 Gbps/100 Mbps). Alternatively, replace the Ethernet adapter.
The running status does not return to normal.	Is Npcap[*1] installed with software other than this product, such as software which executes packet capture?[*3]	Uninstall Npcap[*1] from Control Panel and install this product again. After the installation, check whether there is any problem in the operation of other software which uses Npcap[*1].

Symptom	Description	Corrective action
A data link error occurs in "Communication Status of Each Station."	Is the Ethernet adapter operating normally?*2	• Replace the Ethernet adapter with another one. • For solutions when the Ethernet adapter does not work properly (such as when the Ethernet adapter does not link-up or does not receive data), consult the manufacturer of the Ethernet adapter being used.

*1 For details on Npcap, refer to the following:
☞ Page 53 Npcap OEM

*2 Ethernet adapter may not work properly due to a problem in the Ethernet adapter being used. For example, the Ethernet adapter does not link-up or does not receive data, etc.

*3 When installing software other than this product, Npcap may be installed. In this case, files required for this product may be deleted.

Troubleshooting on data collection

Symptom	Description	Corrective action
Snapshot data is not updated.	Is the operating status of CC-Link IE TSN Communication Service normal?	Check the following items: ☞ Page 42 Troubleshooting on CC-Link IE TSN Communication Service
	Has data missing occurred?	• Check 'Link device data reception status' (SW1010 to SW1017). • Check 'Link device data missing status' (SW1002). If data missing has occurred, take any of the following corrective actions: • Close other applications to reduce the load on the personal computer. • Replace the personal computer with the one with higher performance. • Check if the slave station is disconnected to eliminate a faulty station. • Check if the Ethernet adapter and (TSN) switching hub being used are capable of 1 Gbps.
	Is the snapshot data assurance function used?	End the snapshot data assurance function.
Buffering data is not updated.	Is the operating status of CC-Link IE TSN Communication Service normal?	Check the following items: ☞ Page 42 Troubleshooting on CC-Link IE TSN Communication Service
	Has data missing occurred?	• Check 'Link device data reception status' (SW1010 to SW1017). • Check 'Link device data missing status' (SW1002). If data missing has occurred, take any of the following corrective actions: • Close other applications to reduce the load on the personal computer. • Replace the personal computer with the one with higher performance. • Check if the slave station is disconnected to eliminate a faulty station. • Check if the Ethernet adapter and (TSN) switching hub being used are capable of 1 Gbps.
	Is the buffering canceled?	Stop and start buffering.
	Is the buffering started?	Start buffering.
The event of the WaitBufferingDataEvent method does not occur.	Is the operating status of CC-Link IE TSN Communication Service normal?	Check the following items: ☞ Page 42 Troubleshooting on CC-Link IE TSN Communication Service
	Is the buffering canceled?	Stop and start buffering.
	Does a user program, which runs in the other threads, acquire buffering data?	End the processing of the other threads that read the buffering data.

Troubleshooting on user program

Symptom	Description	Corrective action
An error occurs when executing a method.	Is the operating status of CC-Link IE TSN Communication Service normal?	Check the following items: ☞ Page 42 Troubleshooting on CC-Link IE TSN Communication Service
	Are parameters written?	Check if the corresponding service is stopped or not restarted properly in Windows Event Viewer. If the service is stopped or not restarted, execute the close processing first, and then execute open processing again on a user program to operate the program.
	Is CC-Link IE TSN Communication Service stopped, started or restarted?	

Troubleshooting on personal computer

Symptom	Description	Corrective action
The personal computer is slow or freezes.	Is the personal computer connected in ring topology?	Review the network configuration to ensure the network is connected in line topology or star topology.
	Is the buffering function used?	• Review the interval of buffering and reduce the buffering frequency. • Reduce the data to be buffered.
	Is the CPU utilization of other applications high?	• Close all other applications. • Replace the personal computer with the one which has higher performance.
	Are two channels used?	Use only one channel.

Troubleshooting on CC-Link IE TSN network

Symptom	Description	Corrective action
Remote stations are disconnected when connecting this product to a network.	Are this product and authentication Class A remote stations connected to the same switching hub?	Review the network configuration to ensure not to connect this product and the remote stations to the same switching hub.

Troubleshooting on CC IE TSN Communication Software Utility

Symptom	Description	Corrective action
Contents in the screen are not displayed properly. (For example, overlapping of icons, text overflowing from the frame of a button, etc.)	Is the size of the text and other items in the screen set to a value other than 100% (96 DPI, 9 pt etc.) in Windows settings?	• Set the value to 100% (96 DPI, 9 pt etc.). • For Windows 10 (version 1703 or later)*1 and Windows Server 2019, the display of CC IE TSN Communication Software Utility can be displayed with high DPI scaling by using a Windows 10 function.*2 ❶ Select and right-click 'ccietctutl.exe'*3, then select [Properties] from the shortcut menu. ❷ Select the checkbox of "Override high DPI scaling behavior. Scaling performed by:" in the [Compatibility] tab, then select "System" from the pull-down list. ❸ Click the [OK] button. ■For Windows 10 (version 1909 or later) ❶ Select and right-click 'ccietctutl.exe'*3, then select [Properties] from the shortcut menu. ❷ Click the [Change high DPI settings] button in the [Compatibility] tab. ❸ Select the checkbox of "Override high DPI scaling behavior. Scaling performed by:," then select "System" from the pull-down list. ❹ Click the [OK] button.

*1 The Windows version can be checked by the following procedure.
❶ Press Windows key + R, or select [Windows System] ⇨ [Run] from Windows Start.
❷ Enter 'winver' in the "Run" screen.
❸ Check the version in the displayed screen.

*2 The display of CC IE TSN Communication Software Utility will be blurred by enlarging.
The following lists the setting values for "Change the size of text, apps, and other items" and the recommended display resolution for each setting value in Windows 10.
Setting value: 100%, display resolution: 1024 × 768 dots or more
Setting value: 125%, display resolution: 1900 × 1200 dots or more
Setting value: 150%, display resolution: 1900 × 1200 dots or more
Setting value: 175%, display resolution: 2880 × 1620 dots or more
Setting value: 200%, display resolution: 2880 × 1620 dots or more
Setting value: 225%, display resolution: 3840 × 2160 dots or more
Setting value: 250%, display resolution: 3840 × 2160 dots or more

*3 'ccietctutl.exe' is stored in the folder where CC IE TSN Communication Software Utility has been installed.
The following is an example of a storage location.
C:\Program Files (x86)\MELSOFT\CC IE TSN Communication Software\utility

Troubleshooting on Device Monitor (CC-Link IE TSN Communication Software)

Symptom	Description	Corrective action
Contents in the screen are not displayed properly. (For example, overlapping of icons, text overflowing from the frame of a button, etc.)	Is the size of the text and other items in the screen set to a value other than 100% (96 DPI, 9 pt etc.) in Windows settings?	• Set the value to 100% (96 DPI, 9 pt etc.). • For Windows 10 (version 1703 or later)*1 and Windows Server 2019, the display of Device Monitor (CC-Link IE TSN Communication Software) can be enlarged with high DPI scaling by using a Windows 10 function.*2 Perform the following procedure: ❶ Select and right-click 'ccietctdevmon.exe'*3, then select [Properties] from the shortcut menu. ❷ Select the checkbox of "Override high DPI scaling behavior. Scaling performed by:" in the [Compatibility] tab, then select "System" from the pull-down list. ❸ Click the [OK] button. ■For Windows 10 (version 1909 or later) ❶ Select and right-click 'ccietctdevmon.exe'*3, then select [Properties] from the shortcut menu. ❷ Click the [Change high DPI settings] button in the [Compatibility] tab. ❸ Select the checkbox of "Override high DPI scaling behavior. Scaling performed by:," then select "System" from the pull-down list. ❹ Click the [OK] button.

*1 The Windows version can be checked by the following procedure.
❶ Press Windows key + [R], or select [Windows System] ⇨ [Run] from Windows Start.
❷ Enter 'winver' in the "Run" screen.
❸ Check the version in the displayed screen.

*2 The display of Device Monitor (CC-Link IE TSN Communication Software) will be blurred by enlarging.
The following lists the setting values for "Change the size of text, apps, and other items" and the recommended display resolution for each setting value in Windows 10.
Setting value: 100%, display resolution: 1024 × 768 dots or more
Setting value: 125%, display resolution: 1900 × 1200 dots or more
Setting value: 150%, display resolution: 1900 × 1200 dots or more
Setting value: 175%, display resolution: 2880 × 1620 dots or more
Setting value: 200%, display resolution: 2880 × 1620 dots or more
Setting value: 225%, display resolution: 3840 × 2160 dots or more
Setting value: 250%, display resolution: 3840 × 2160 dots or more

*3 'ccietctdevmon.exe' is stored in the folder where CC IE TSN Communication Software Utility has been installed.
The following is an example of a storage location.
C:\Program Files (x86)\MELSOFT\CC IE TSN Communication Software\utility

Troubleshooting on installation

Symptom	Description	Corrective action
Npcap*1 installation does not proceed.	Is any software which executes packet capture activated?	Close the software which executes packet capture and install Npcap again.
Update installation of Npcap*1 failed.	Has Npcap*1 already been installed?	Uninstall the Npcap*1 from the control panel and install it again.

*1 For details on Npcap, refer to the following:
☞ Page 53 Npcap OEM

APPENDIX

Appendix 1 Performance Specifications

The following shows the performance specifications of CC-Link IE TSN Communication Software.

Item		Description	
Link device data access function	Maximum number of device points per channel	RX	16384 points (2 KB)
		RY	16384 points (2 KB)
		RWr	8192 points (16 KB)
		RWw	8192 points (16 KB)
		LB	32768 points (4 KB)
		LW	16384 points (32 KB)
		SB	8192 points (1 KB)
		SW	8192 points (16 KB)
	Maximum number of stations per channel	121 stations	
	Minimum communication cycle	125 μsec	
Channel	Number of available ports	2	
	Number of communication lines can be opened simultaneously per channel (Number of opened user program per channel + Number of activated device monitors per channel)	4	
Buffering function	Number of buffering per channel	4*2	
	Available capacity for buffering	320 MB	

*2 One buffering can be executed each time when a communication line of a channel is opened. To perform buffering multiple times, multiple communication lines must be opened.

A

Appendix 2 Device Memory

This is a memory area managed by this product. By reading values stored in device memories, values of each link device, which are sent from each station, and the status of CC-Link IE TSN Communication Service can be checked.

Device list

The following table shows devices managed by this product.

Device name (Device)	Type	Number of points	Description	Notation
Remote input (RX)	Bit	16384 points	Remote input values of link devices, which are sent from each station, are stored.	Hexadecimal
Remote output (RY)	Bit	16384 points	Remote output values of link devices, which are sent from each station, are stored.	Hexadecimal
Remote register (RWr)	Word	8192 points	Remote register values of link devices, which are sent from each station, are stored.	Hexadecimal
Remote register (RWw)	Word	8192 points	Remote register values of link devices, which are sent from each station, are stored.	Hexadecimal
Link relay (LB)	Bit	32768 points	Values of link relays, which are sent from each station, are stored.	Hexadecimal
Link register (LW)	Word	16384 points	Values of link registers, which are sent from each station, are stored.	Hexadecimal
Link special relay (SB)	Bit	8192 points	The status of CC-Link IE TSN Communication Service is stored.	Hexadecimal
Link special register (SW)	Word	8192 points	The following data is stored: link device transmission time and data missing status received by CC-Link IE TSN Communication Service, and the status of CC-Link IE TSN Communication Service, etc.	Hexadecimal

Appendix 3 List of Link Special Relays (SB)

A link special relay (SB) is turned ON/OFF depending on various factors during data link. Any error status of the data link can be checked by using or monitoring the link special relay in the program.

No.	Name	Description
SB006A	Link-down status of own station	Stores the link-down status of the own station. • OFF: Link-up • ON: Link-down
SB00B0	Data link error status of each station	Stores the data-link status of each station. • OFF: All stations normal • ON: Faulty station exists When this relay is turned ON, the status of each station is stored in 'Data link status of each station' (SW00B0 to SW00B7).
SB00B1	Data link error status of master station	Stores the data link status of the master station. • OFF: Normal • ON: Error
SB00C0	Reserved station setting	Stores the status of whether or not a reserved station is set. • OFF: Not set • ON: Set The setting status of each station is stored in 'Reserved station setting status' (SW00C0 to SW00C7).
SB1000	Buffering data overflow status	Stores the overflow status of buffering data. • OFF: No overflow • ON: Overflow
SB1001	Link-down status	Stores the link-down status of an operation port. • OFF: Link-up • ON: Link-down The time until link-up starts after turning the power ON or connecting Ethernet cable may vary. Normally link-up takes several seconds. Depending on device status on the line, link-up processing is repeated and may increase the time.
SB1002	Link device data missing status	Stores the missing status of link device data. • OFF: Data is not missing • ON: Data is missing Data missing means that the collected link device data is not continuous. This relay turns ON when link device data is collected discontinuously in cyclic cycle units from last collection time.
SB1020	Number of connected slave stations	Stores the setting status of the number of connected slave stations that is configured in master station parameters. • OFF: Not set • ON: Set The number of connected stations is stored in 'Number of connected slave stations' (SW1020).
SB1021	Disconnection detection setting	Stores the setting status of disconnection detection that is configured in master station parameters. • OFF: Not set • ON: Set The setting status is stored in 'Disconnection detection setting' (SW1021).
SB1023	Station-based block data assurance setting	Stores the setting status of station-based block data assurance that is configured for master station parameters. • OFF: Not set • ON: Set The setting status of assurance is stored in 'Station-based block data assurance setting' (SW1023).
SB1D00	IP address setting (IPv4)	Stores the setting status of IP address (IPv4) that is configured for master station parameters. • OFF: Not set • ON: Set The IP address is stored in 'IP address setting (IPv4)' (SW1D00 to SW1DF1).

Appendix 4 List of Link Special Registers (SW)

A link special register (SW) stores the information at data link as a numerical value. Faulty areas and causes can be checked by using or monitoring the link special register in programs.

<table>
<tr><th>No.</th><th>Name</th><th>Description</th></tr>
<tr><td>SW0040</td><td>Network number</td><td>Stores the network number collected by CC-Link IE TSN Communication Service.</td></tr>
<tr><td>SW0058</td><td>Total number of slave stations setting value</td><td>Stores the total number of slave stations that are set by the parameters.
Range: 1 to 120</td></tr>
<tr><td>SW0059</td><td>Total number of slave stations present value</td><td>Stores the total number of slave stations that are actually connected by data link.
Range: 1 to 120</td></tr>
<tr><td>SW0060</td><td>Communication cycle interval</td><td>Stores the communication cycle of cyclic communication that is collected by CC-Link IE TSN Communication Service. (Unit: μs)</td></tr>
<tr><td>SW0064</td><td>Multiple cycle setting (medium speed)</td><td>Stores the setting value of the multiple cycle setting (medium speed) set with the module parameter of the master station.</td></tr>
<tr><td>SW0065</td><td>Multiple cycle setting (low speed)</td><td>Stores the setting value of the multiple cycle setting (low speed) set with the module parameter of the master station.</td></tr>
<tr><td>SW00B0 to SW00B7</td><td>Data link status of each station</td><td>Stores the data-link status of each station.
• 0: Data link normally operating station
• 1: Data link faulty station (not data linked)
<table><tr><th></th><th>b15</th><th>b14</th><th>b13</th><th>b12</th><th>b11</th><th>b10</th><th>b9</th><th>b8</th><th>b7</th><th>b6</th><th>b5</th><th>b4</th><th>b3</th><th>b2</th><th>b1</th><th>b0</th></tr><tr><td>SW00B0</td><td>16</td><td>15</td><td>14</td><td>13</td><td>12</td><td>11</td><td>10</td><td>9</td><td>8</td><td>7</td><td>6</td><td>5</td><td>4</td><td>3</td><td>2</td><td>1</td></tr><tr><td>SW00B1</td><td>32</td><td>31</td><td>30</td><td>29</td><td>28</td><td>27</td><td>26</td><td>25</td><td>24</td><td>23</td><td>22</td><td>21</td><td>20</td><td>19</td><td>18</td><td>17</td></tr><tr><td>SW00B2</td><td>48</td><td>47</td><td>46</td><td>45</td><td>44</td><td>43</td><td>42</td><td>41</td><td>40</td><td>39</td><td>38</td><td>37</td><td>36</td><td>35</td><td>34</td><td>33</td></tr><tr><td>SW00B3</td><td>64</td><td>63</td><td>62</td><td>61</td><td>60</td><td>59</td><td>58</td><td>57</td><td>56</td><td>55</td><td>54</td><td>53</td><td>52</td><td>51</td><td>50</td><td>49</td></tr><tr><td>SW00B4</td><td>80</td><td>79</td><td>78</td><td>77</td><td>76</td><td>75</td><td>74</td><td>73</td><td>72</td><td>71</td><td>70</td><td>69</td><td>68</td><td>67</td><td>66</td><td>65</td></tr><tr><td>SW00B5</td><td>96</td><td>95</td><td>94</td><td>93</td><td>92</td><td>91</td><td>90</td><td>89</td><td>88</td><td>87</td><td>86</td><td>85</td><td>84</td><td>83</td><td>82</td><td>81</td></tr><tr><td>SW00B6</td><td>112</td><td>111</td><td>110</td><td>109</td><td>108</td><td>107</td><td>106</td><td>105</td><td>104</td><td>103</td><td>102</td><td>101</td><td>100</td><td>99</td><td>98</td><td>97</td></tr><tr><td>SW00B7</td><td>-</td><td>-</td><td>-</td><td>-</td><td>-</td><td>-</td><td>-</td><td>-</td><td>120</td><td>119</td><td>118</td><td>117</td><td>116</td><td>115</td><td>114</td><td>113</td></tr></table>The value will be always '0' in a station with which this product cannot communicate (authentication Class A remote station).
The value is always '0' for a station whose parameters are not set.</td></tr>
<tr><td>SW00C0 to SW00C7</td><td>Reserved station setting status</td><td>Stores the reserved station setting status of each station.
• 0: Station other than a reserved station
• 1: Reserved station
<table><tr><th></th><th>b15</th><th>b14</th><th>b13</th><th>b12</th><th>b11</th><th>b10</th><th>b9</th><th>b8</th><th>b7</th><th>b6</th><th>b5</th><th>b4</th><th>b3</th><th>b2</th><th>b1</th><th>b0</th></tr><tr><td>SW00C0</td><td>16</td><td>15</td><td>14</td><td>13</td><td>12</td><td>11</td><td>10</td><td>9</td><td>8</td><td>7</td><td>6</td><td>5</td><td>4</td><td>3</td><td>2</td><td>1</td></tr><tr><td>SW00C1</td><td>32</td><td>31</td><td>30</td><td>29</td><td>28</td><td>27</td><td>26</td><td>25</td><td>24</td><td>23</td><td>22</td><td>21</td><td>20</td><td>19</td><td>18</td><td>17</td></tr><tr><td>SW00C2</td><td>48</td><td>47</td><td>46</td><td>45</td><td>44</td><td>43</td><td>42</td><td>41</td><td>40</td><td>39</td><td>38</td><td>37</td><td>36</td><td>35</td><td>34</td><td>33</td></tr><tr><td>SW00C3</td><td>64</td><td>63</td><td>62</td><td>61</td><td>60</td><td>59</td><td>58</td><td>57</td><td>56</td><td>55</td><td>54</td><td>53</td><td>52</td><td>51</td><td>50</td><td>49</td></tr><tr><td>SW00C4</td><td>80</td><td>79</td><td>78</td><td>77</td><td>76</td><td>75</td><td>74</td><td>73</td><td>72</td><td>71</td><td>70</td><td>69</td><td>68</td><td>67</td><td>66</td><td>65</td></tr><tr><td>SW00C5</td><td>96</td><td>95</td><td>94</td><td>93</td><td>92</td><td>91</td><td>90</td><td>89</td><td>88</td><td>87</td><td>86</td><td>85</td><td>84</td><td>83</td><td>82</td><td>81</td></tr><tr><td>SW00C6</td><td>112</td><td>111</td><td>110</td><td>109</td><td>108</td><td>107</td><td>106</td><td>105</td><td>104</td><td>103</td><td>102</td><td>101</td><td>100</td><td>99</td><td>98</td><td>97</td></tr><tr><td>SW00C7</td><td>-</td><td>-</td><td>-</td><td>-</td><td>-</td><td>-</td><td>-</td><td>-</td><td>120</td><td>119</td><td>118</td><td>117</td><td>116</td><td>115</td><td>114</td><td>113</td></tr></table></td></tr>
<tr><td>SW00C8 to SW00CF</td><td>Parameter setting status</td><td>Stores the status of parameters which are set in the master station.
• 0: Parameter is not set
• 1: Parameter is set
<table><tr><th></th><th>b15</th><th>b14</th><th>b13</th><th>b12</th><th>b11</th><th>b10</th><th>b9</th><th>b8</th><th>b7</th><th>b6</th><th>b5</th><th>b4</th><th>b3</th><th>b2</th><th>b1</th><th>b0</th></tr><tr><td>SW00C8</td><td>16</td><td>15</td><td>14</td><td>13</td><td>12</td><td>11</td><td>10</td><td>9</td><td>8</td><td>7</td><td>6</td><td>5</td><td>4</td><td>3</td><td>2</td><td>1</td></tr><tr><td>SW00C9</td><td>32</td><td>31</td><td>30</td><td>29</td><td>28</td><td>27</td><td>26</td><td>25</td><td>24</td><td>23</td><td>22</td><td>21</td><td>20</td><td>19</td><td>18</td><td>17</td></tr><tr><td>SW00CA</td><td>48</td><td>47</td><td>46</td><td>45</td><td>44</td><td>43</td><td>42</td><td>41</td><td>40</td><td>39</td><td>38</td><td>37</td><td>36</td><td>35</td><td>34</td><td>33</td></tr><tr><td>SW00CB</td><td>64</td><td>63</td><td>62</td><td>61</td><td>60</td><td>59</td><td>58</td><td>57</td><td>56</td><td>55</td><td>54</td><td>53</td><td>52</td><td>51</td><td>50</td><td>49</td></tr><tr><td>SW00CC</td><td>80</td><td>79</td><td>78</td><td>77</td><td>76</td><td>75</td><td>74</td><td>73</td><td>72</td><td>71</td><td>70</td><td>69</td><td>68</td><td>67</td><td>66</td><td>65</td></tr><tr><td>SW00CD</td><td>96</td><td>95</td><td>94</td><td>93</td><td>92</td><td>91</td><td>90</td><td>89</td><td>88</td><td>87</td><td>86</td><td>85</td><td>84</td><td>83</td><td>82</td><td>81</td></tr><tr><td>SW00CE</td><td>112</td><td>111</td><td>110</td><td>109</td><td>108</td><td>107</td><td>106</td><td>105</td><td>104</td><td>103</td><td>102</td><td>101</td><td>100</td><td>99</td><td>98</td><td>97</td></tr><tr><td>SW00CF</td><td>-</td><td>-</td><td>-</td><td>-</td><td>-</td><td>-</td><td>-</td><td>-</td><td>120</td><td>119</td><td>118</td><td>117</td><td>116</td><td>115</td><td>114</td><td>113</td></tr></table></td></tr>
<tr><td>SW1000 to SW1002</td><td>Link device transmission time (seconds)</td><td>Stores the time (UTC)*1 of when link devices, which are received by CC-Link IE TSN Communication Service, are sent.
Total 6 byte
SW1000 (lower) to SW1002 (upper)</td></tr>
<tr><td>SW1003 to SW1004</td><td>Link device transmission time (nanoseconds)</td><td>Stores the time (UTC)*1 of when link devices, which are received by CC-Link IE TSN Communication Service, are sent.
Total 4 byte
SW1003 (lower) to SW1004 (upper)</td></tr>
</table>

No.	Name	Description
SW1005	Time zone of master station	Stores the time zone of a master station (in minutes).
SW1006	Adjust clock for daylight saving time	Stores the status of whether or not the daylight saving time is adjusted. • 0: Not adjusted • 1: Adjusted
SW100A to SW100D	Cyclic cycle number	Stores a value which is incremented by one for each cyclic cycle. The start number can be specified by a master station. SW100A (lower) to SW100D (upper)
SW1010 to SW1017	Link device data reception status	Stores the reception status of received link devices. • 0: No data missing • 1: Data missing b15 b14 b13 b12 b11 b10 b9 b8 b7 b6 b5 b4 b3 b2 b1 b0 SW1010: 15 14 13 12 11 10 9 8 7 6 5 4 3 2 1 0 SW1011: 31 30 29 28 27 26 25 24 23 22 21 20 19 18 17 16 SW1012: 47 46 45 44 43 42 41 40 39 38 37 36 35 34 33 32 SW1013: 63 62 61 60 59 58 57 56 55 54 53 52 51 50 49 48 SW1014: 79 78 77 76 75 74 73 72 71 70 69 68 67 66 65 64 SW1015: 95 94 93 92 91 90 89 88 87 86 85 84 83 82 81 80 SW1016: 111 110 109 108 107 106 105 104 103 102 101 100 99 98 97 96 SW1017: - - - - - - - 120 119 118 117 116 115 114 113 112 For a reserved station or a station whose parameters are not set, '0: No data missing' will be stored. The status will always be '0: No data missing' in a station with which this product cannot communicate (authentication Class A remote station). For a station which has not received link devices, '1: Data missing' will be stored.
SW101A to SW101C	Link device transmission network time (seconds)	Stores the network time[*1] of when link devices, which are received by CC-Link IE TSN Communication Service, are sent. Total 6 byte SW101A (lower) to SW1001C (higher)
SW101D to SW101E	Link device transmission network time (nanoseconds)	Stores the network time[*1] of when link devices, which are received by CC-Link IE TSN Communication Service, are sent. Total 4 byte SW101D (lower) to SW101E (upper)
SW1020	Number of connected slave stations	Stores the number of connected slave stations that are set by the parameters of a master station.
SW1021	Disconnection detection setting	Stores disconnection detection setting values (the number of consecutive communication failures until a slave station is considered to be disconnected) that are set by the module parameter of a master station.
SW1022	Communication mode setting	Stores the status of communication mode that is set by the module parameter of a master station. • 0: Unicast • 1: Multicast
SW1023	Station-based block data assurance setting	Stores the status of station-based block data assurance that is set by the module parameters of master station. • 0: Not assured • 1: Assured
SW1024	Total number of data missing	Stores the total number of times that data has been missed since the activation of CC-Link IE TSN Communication Service. The number of times is incremented by one for each station in which data missing occurs (the total number of times that 'Link device data reception status' becomes 'Data missing'). The count is reset to '0' when ending or re-starting CC-Link IE TSN Communication Service. The count up stops when the total number reaches 65535.
SW1025	Service connection status	Stores connection status of CC-Link IE TSN Communication Service. • 0H: Preparing for connection • 1H: Collecting • 102H: Master station connection preparation error • 103H: Master station connection status error • 104H: Service stopped by error • 105H: Ethernet adapter error

No.	Name	Description
SW1100 to SW16AB	Device area of each station	Stores the device area of each station. • SW1100: Station No.0 RX start device number • SW1101: Station No.0 RX size (byte) • SW1102: Station No.0 RY start device number • SW1103: Station No.0 RY size (byte) • SW1104: Station No.0 RWr start device number • SW1105: Station No.0 RWr size (byte) • SW1106: Station No.0 RWw start device number • SW1107: Station No.0 RWw size (byte) • SW1108: Station No.0 LB start device number • SW1109: Station No.0 LB size (byte) • SW110A: Station No.0 LW start device number • SW110B: Station No.0 LW size (byte) • SW110C to SW16AB: Station No.1 to 120 RX to LW start device number and size (byte)
SW1D00 to SW1D01	IP address setting (IPv4)	Stores the IP address of station No.0. <table><tr><td>SW1D00</td><td>(1)</td><td>(2)</td></tr><tr><td>SW1D01</td><td>(3)</td><td>(4)</td></tr></table> (1) Third octet (2) Fourth octet (3) First octet (4) Second octet
SW1D02 to SW1DF1	IP address setting (IPv4)	Stores the IP address of station No.1 to 120. The storage order is the same as that of the station No.0.

*1 The elapsed time since '1970/1/1 00:00:00.'

Appendix 5 Open Source Software

This software consists of multiple software components. Each of them is copyrighted by Mitsubishi Electric and/or third parties.

This software contains the following open source software.

● Software copyrighted by third parties and distributed as free software

Software information

This product contains the following open source software.

❶Npcap OEM

Npcap OEM

This product uses Npcap OEM.

The permission notice of Npcap OEM is described below.

Copyright (c) 1999 - 2005 NetGroup, Politecnico di Torino (Italy).
Copyright (c) 2005 - 2010 CACE Technologies, Davis (California).
All rights reserved.

Redistribution and use in source and binary forms, with or without modification, are permitted provided that the following conditions are met:

1. Redistributions of source code must retain the above copyright notice, this list of conditions and the following disclaimer.
2. Redistributions in binary form must reproduce the above copyright notice, this list of conditions and the following disclaimer in the documentation and/or other materials provided with the distribution.
3. Neither the name of the Politecnico di Torino, CACE Technologies nor the names of its contributors may be used to endorse or promote products derived from this software without specific prior written permission.

THIS SOFTWARE IS PROVIDED BY THE COPYRIGHT HOLDERS AND CONTRIBUTORS "AS IS" AND ANY EXPRESS OR IMPLIED WARRANTIES, INCLUDING, BUT NOT LIMITED TO, THE IMPLIED WARRANTIES OF MERCHANTABILITY AND FITNESS FOR A PARTICULAR PURPOSE ARE DISCLAIMED. IN NO EVENT SHALL THE COPYRIGHT OWNER OR CONTRIBUTORS BE LIABLE FOR ANY DIRECT, INDIRECT, INCIDENTAL, SPECIAL, EXEMPLARY, OR CONSEQUENTIAL DAMAGES (INCLUDING, BUT NOT LIMITED TO, PROCUREMENT OF SUBSTITUTE GOODS OR SERVICES; LOSS OF USE, DATA, OR PROFITS; OR BUSINESS INTERRUPTION) HOWEVER CAUSED AND ON ANY THEORY OF LIABILITY, WHETHER IN CONTRACT, STRICT LIABILITY, OR TORT (INCLUDING NEGLIGENCE OR OTHERWISE) ARISING IN ANY WAY OUT OF THE USE OF THIS SOFTWARE, EVEN IF ADVISED OF THE POSSIBILITY OF SUCH DAMAGE.

This product includes software developed by the University of California, Lawrence Berkeley Laboratory and its contributors.
This product includes software developed by the Kungliga Tekniska Högskolan and its contributors.
This product includes software developed by Yen Yen Lim and North Dakota State University.

Portions Copyright (c) 1990, 1991, 1992, 1993, 1994, 1995, 1996, 1997 The Regents of the University of California. All rights reserved.

Redistribution and use in source and binary forms, with or without modification, are permitted provided that the following conditions are met:
1. Redistributions of source code must retain the above copyright notice, this list of conditions and the following disclaimer.
2. Redistributions in binary form must reproduce the above copyright notice, this list of conditions and the following disclaimer in the documentation and/or other materials provided with the distribution.
3. All advertising materials mentioning features or use of this software must display the following acknowledgement: "This product includes software developed by the University of California, Berkeley and its contributors."
4. Neither the name of the University nor the names of its contributors may be used to endorse or promote products derived from this software without specific prior written permission.

THIS SOFTWARE IS PROVIDED BY THE INSTITUTE AND CONTRIBUTORS ``AS IS'' AND ANY EXPRESS OR IMPLIED WARRANTIES, INCLUDING, BUT NOT LIMITED TO, THE IMPLIED WARRANTIES OF MERCHANTABILITY AND FITNESS FOR A PARTICULAR PURPOSE ARE DISCLAIMED. IN NO EVENT SHALL THE REGENTS OR CONTRIBUTORS BE LIABLE FOR ANY DIRECT, INDIRECT, INCIDENTAL, SPECIAL, EXEMPLARY, OR CONSEQUENTIAL DAMAGES (INCLUDING, BUT NOT LIMITED TO, PROCUREMENT OF SUBSTITUTE GOODS OR SERVICES; LOSS OF USE, DATA, OR PROFITS; OR BUSINESS INTERRUPTION) HOWEVER CAUSED AND ON ANY THEORY OF LIABILITY, WHETHER IN CONTRACT, STRICT LIABILITY, OR TORT (INCLUDING NEGLIGENCE OR OTHERWISE) ARISING IN ANY WAY OUT OF THE USE OF THIS SOFTWARE, EVEN IF ADVISED OF THE POSSIBILITY OF SUCH DAMAGE.

Portions Copyright (c) 1983 Regents of the University of California. All rights reserved.

Redistribution and use in source and binary forms are permitted provided that the above copyright notice and this paragraph are duplicated in all such forms and that any documentation, advertising materials, and other materials related to such distribution and use acknowledge that the software was developed by the University of California, Berkeley. The name of the University may not be used to endorse or promote products derived from this software without specific prior written permission. THIS SOFTWARE IS PROVIDED ``AS IS'' AND WITHOUT ANY EXPRESS OR IMPLIED WARRANTIES, INCLUDING, WITHOUT LIMITATION, THE IMPLIED WARRANTIES OF MERCHANTIBILITY AND FITNESS FOR A PARTICULAR PURPOSE.

Portions Copyright (c) 1995, 1996, 1997 Kungliga Tekniska Högskolan (Royal Institute of Technology, Stockholm, Sweden). All rights reserved.

Redistribution and use in source and binary forms, with or without modification, are permitted provided that the following conditions are met:

1. Redistributions of source code must retain the above copyright notice, this list of conditions and the following disclaimer.

2. Redistributions in binary form must reproduce the above copyright notice, this list of conditions and the following disclaimer in the documentation and/or other materials provided with the distribution.

3. All advertising materials mentioning features or use of this software must display the following acknowledgement: "This product includes software developed by the Kungliga Tekniska Högskolan and its contributors.

4. Neither the name of the University nor the names of its contributors may be used to endorse or promote products derived from this software without specific prior written permission.

THIS SOFTWARE IS PROVIDED BY THE INSTITUTE AND CONTRIBUTORS ``AS IS'' AND ANY EXPRESS OR IMPLIED WARRANTIES, INCLUDING, BUT NOT LIMITED TO, THE IMPLIED WARRANTIES OF MERCHANTABILITY AND FITNESS FOR A PARTICULAR PURPOSE ARE DISCLAIMED. IN NO EVENT SHALL THE INSTITUTE OR CONTRIBUTORS BE LIABLE FOR ANY DIRECT, INDIRECT, INCIDENTAL, SPECIAL, EXEMPLARY, OR CONSEQUENTIAL DAMAGES (INCLUDING, BUT NOT LIMITED TO, PROCUREMENT OF SUBSTITUTE GOODS OR SERVICES; LOSS OF USE, DATA, OR PROFITS; OR BUSINESS INTERRUPTION) HOWEVER CAUSED AND ON ANY THEORY OF LIABILITY, WHETHER IN CONTRACT, STRICT LIABILITY, OR TORT (INCLUDING NEGLIGENCE OR OTHERWISE) ARISING IN ANY WAY OUT OF THE USE OF THIS SOFTWARE, EVEN IF ADVISED OF THE POSSIBILITY OF SUCH DAMAGE.

Portions Copyright (c) 1997 Yen Yen Lim and North Dakota State University. All rights reserved.

Redistribution and use in source and binary forms, with or without modification, are permitted provided that the following conditions are met:

1. Redistributions of source code must retain the above copyright notice, this list of conditions and the following disclaimer.

2. Redistributions in binary form must reproduce the above copyright notice, this list of conditions and the following disclaimer in the documentation and/or other materials provided with the distribution.

3. All advertising materials mentioning features or use of this software must display the following acknowledgement: "This product includes software developed by Yen Yen Lim and North Dakota State University"

4. The name of the author may not be used to endorse or promote products derived from this software without specific prior written permission.

THIS SOFTWARE IS PROVIDED BY THE AUTHOR ``AS IS'' AND ANY EXPRESS OR IMPLIED WARRANTIES, INCLUDING, BUT NOT LIMITED TO, THE IMPLIED WARRANTIES OF MERCHANTABILITY AND FITNESS FOR A PARTICULAR PURPOSE ARE DISCLAIMED. IN NO EVENT SHALL THE AUTHOR BE LIABLE FOR ANY DIRECT, INDIRECT, INCIDENTAL, SPECIAL, EXEMPLARY, OR CONSEQUENTIAL DAMAGES (INCLUDING, BUT NOT LIMITED TO, PROCUREMENT OF SUBSTITUTE GOODS OR SERVICES; LOSS OF USE, DATA, OR PROFITS; OR BUSINESS INTERRUPTION) HOWEVER CAUSED AND ON ANY THEORY OF LIABILITY, WHETHER IN CONTRACT, STRICT LIABILITY, OR TORT (INCLUDING NEGLIGENCE OR OTHERWISE) ARISING IN ANY WAY OUT OF THE USE OF THIS SOFTWARE, EVEN IF ADVISED OF THE POSSIBILITY OF SUCH DAMAGE.

Portions Copyright (c) 1993 by Digital Equipment Corporation.

Permission to use, copy, modify, and distribute this software for any purpose with or without fee is hereby granted, provided that the above copyright notice and this permission notice appear in all copies, and that the name of Digital Equipment Corporation not be used in advertising or publicity pertaining to distribution of the document or software without specific, written prior permission.

THE SOFTWARE IS PROVIDED "AS IS" AND DIGITAL EQUIPMENT CORP. DISCLAIMS ALL WARRANTIES WITH REGARD TO THIS SOFTWARE, INCLUDING ALL IMPLIED WARRANTIES OF MERCHANTABILITY AND FITNESS. IN NO EVENT SHALL DIGITAL EQUIPMENT CORPORATION BE LIABLE FOR ANY SPECIAL, DIRECT, INDIRECT, OR CONSEQUENTIAL DAMAGES OR ANY DAMAGES WHATSOEVER RESULTING FROM LOSS OF USE, DATA OR PROFITS, WHETHER IN AN ACTION OF CONTRACT, NEGLIGENCE OR OTHER TORTIOUS ACTION, ARISING OUT OF OR IN CONNECTION WITH THE USE OR PERFORMANCE OF THIS SOFTWARE.

Portions Copyright (C) 1995, 1996, 1997, 1998, and 1999 WIDE Project. All rights reserved.

Redistribution and use in source and binary forms, with or without modification, are permitted provided that the following conditions are met:

1. Redistributions of source code must retain the above copyright notice, this list of conditions and the following disclaimer.

2. Redistributions in binary form must reproduce the above copyright notice, this list of conditions and the following disclaimer in the documentation and/or other materials provided with the distribution.

3. Neither the name of the project nor the names of its contributors may be used to endorse or promote products derived from this software without specific prior written permission.

THIS SOFTWARE IS PROVIDED BY THE PROJECT AND CONTRIBUTORS ``AS IS'' AND ANY EXPRESS OR IMPLIED WARRANTIES, INCLUDING, BUT NOT LIMITED TO, THE IMPLIED WARRANTIES OF MERCHANTABILITY AND FITNESS FOR A PARTICULAR PURPOSE

ARE DISCLAIMED. IN NO EVENT SHALL THE PROJECT OR CONTRIBUTORS BE LIABLE FOR ANY DIRECT, INDIRECT, INCIDENTAL, SPECIAL, EXEMPLARY, OR CONSEQUENTIAL DAMAGES (INCLUDING, BUT NOT LIMITED TO, PROCUREMENT OF SUBSTITUTE GOODS

OR SERVICES; LOSS OF USE, DATA, OR PROFITS; OR BUSINESS INTERRUPTION) HOWEVER CAUSED AND ON ANY THEORY OF LIABILITY, WHETHER IN CONTRACT, STRICT LIABILITY, OR TORT (INCLUDING NEGLIGENCE OR OTHERWISE) ARISING IN ANY WAY

OUT OF THE USE OF THIS SOFTWARE, EVEN IF ADVISED OF THE POSSIBILITY OF SUCH DAMAG

Portions Copyright (c) 1996 Juniper Networks, Inc. All rights reserved.

Redistribution and use in source and binary forms, with or without modification, are permitted provided that: (1) source code distributions retain the above copyright notice and this paragraph in its entirety, (2) distributions including binary code include the above copyright notice and this paragraph in its entirety in the documentation or other materials provided with the distribution. The name of Juniper Networks may not be used to endorse or promote products derived from this software without specific prior written permission.

THIS SOFTWARE IS PROVIDED ``AS IS'' AND WITHOUT ANY EXPRESS OR IMPLIED WARRANTIES, INCLUDING, WITHOUT LIMITATION, THE IMPLIED WARRANTIES OF MERCHANTABILITY AND FITNESS FOR A PARTICULAR PURPOSE.

Portions Copyright (c) 2001 Daniel Hartmeier All rights reserved.

Redistribution and use in source and binary forms, with or without modification, are permitted provided that the following conditions are met:

- Redistributions of source code must retain the above copyright notice, this list of conditions and the following disclaimer.
- Redistributions in binary form must reproduce the above copyright notice, this list of conditions and the following disclaimer in the documentation and/or other materials provided with the distribution.

THIS SOFTWARE IS PROVIDED BY THE COPYRIGHT HOLDERS AND CONTRIBUTOR "AS IS" AND ANY EXPRESS OR IMPLIED WARRANTIES, INCLUDING, BUT NOT LIMITED TO, THE IMPLIED WARRANTIES OF MERCHANTABILITY AND FITNESS FOR A PARTICULAR PURPOSE ARE DISCLAIMED. IN NO EVENT SHALL THE COPYRIGHT HOLDERS OR CONTRIBUTORS BE LIABLE FOR ANY DIRECT, INDIRECT, INCIDENTAL, SPECIAL, EXEMPLARY, OR CONSEQUENTIAL DAMAGES (INCLUDING, BUT NOT LIMITED TO, PROCUREMENT OF SUBSTITUTE GOODS OR SERVICES; LOSS OF USE, DATA, OR PROFITS; OR BUSINESS INTERRUPTION) HOWEVER CAUSED AND ON ANY THEORY OF LIABILITY, WHETHER IN CONTRACT, STRICT LIABILITY, OR TORT (INCLUDING NEGLIGENCE OR OTHERWISE) ARISING IN ANY WAY OUT OF THE USE OF THIS SOFTWARE, EVEN IF ADVISED OF THE POSSIBILITY OF SUCH DAMAGE.

Portions Copyright 1989 by Carnegie Mellon.

Permission to use, copy, modify, and distribute this program for any purpose and without fee is hereby granted, provided that this copyright and permission notice appear on all copies and supporting documentation, the name of Carnegie Mellon not be used in advertising or publicity pertaining to distribution of the program without specific prior permission, and notice be given in supporting documentation that copying and distribution is by permission of Carnegie Mellon and Stanford University. Carnegie Mellon makes no representations about the suitability of this software for any purpose. It is provided "as is" without express or implied warranty.

INDEX

C

CCIETSN authentication Class A 28
CCIETSN authentication Class B 25

E

Event log 39
Event Viewer 40

S

Storing data in the buffering area 13
Storing data in the snapshot data storage area. . . 13

MEMO

REVISIONS

*The manual number is given on the bottom left of the back cover.

Revision date	*Manual number	Description
October 2020	SH(NA)-082271ENG-A	First edition

Japanese manual number: SH-082270-A

This manual confers no industrial property rights of any other kind, nor does it confer any patent licenses. Mitsubishi Electric Corporation cannot be held responsible for any problems involving industrial property rights which may occur as a result of using the contents noted in this manual.

© 2020 MITSUBISHI ELECTRIC CORPORATION

WARRANTY

Please confirm the following product warranty details before using this product.

1. Gratis Warranty Term and Gratis Warranty Range

If any faults or defects (hereinafter "Failure") found to be the responsibility of Mitsubishi occurs during use of the product within the gratis warranty term, the product shall be repaired at no cost via the sales representative or Mitsubishi Service Company.

However, if repairs are required onsite at domestic or overseas location, expenses to send an engineer will be solely at the customer's discretion. Mitsubishi shall not be held responsible for any re-commissioning, maintenance, or testing on-site that involves replacement of the failed module.

[Gratis Warranty Term]

The gratis warranty term of the product shall be for one year after the date of purchase or delivery to a designated place. Note that after manufacture and shipment from Mitsubishi, the maximum distribution period shall be six (6) months, and the longest gratis warranty term after manufacturing shall be eighteen (18) months. The gratis warranty term of repair parts shall not exceed the gratis warranty term before repairs.

[Gratis Warranty Range]

(1) The range shall be limited to normal use within the usage state, usage methods and usage environment, etc., which follow the conditions and precautions, etc., given in the instruction manual, user's manual and caution labels on the product.

(2) Even within the gratis warranty term, repairs shall be charged for in the following cases.

1. Failure occurring from inappropriate storage or handling, carelessness or negligence by the user. Failure caused by the user's hardware or software design.
2. Failure caused by unapproved modifications, etc., to the product by the user.
3. When the Mitsubishi product is assembled into a user's device, Failure that could have been avoided if functions or structures, judged as necessary in the legal safety measures the user's device is subject to or as necessary by industry standards, had been provided.
4. Failure that could have been avoided if consumable parts (battery, backlight, fuse, etc.) designated in the instruction manual had been correctly serviced or replaced.
5. Failure caused by external irresistible forces such as fires or abnormal voltages, and Failure caused by force majeure such as earthquakes, lightning, wind and water damage.
6. Failure caused by reasons unpredictable by scientific technology standards at time of shipment from Mitsubishi.
7. Any other failure found not to be the responsibility of Mitsubishi or that admitted not to be so by the user.

2. Onerous repair term after discontinuation of production

(1) Mitsubishi shall accept onerous product repairs for seven (7) years after production of the product is discontinued. Discontinuation of production shall be notified with Mitsubishi Technical Bulletins, etc.

(2) Product supply (including repair parts) is not available after production is discontinued.

3. Overseas service

Overseas, repairs shall be accepted by Mitsubishi's local overseas FA Center. Note that the repair conditions at each FA Center may differ.

4. Exclusion of loss in opportunity and secondary loss from warranty liability

Regardless of the gratis warranty term, Mitsubishi shall not be liable for compensation to:

(1) Damages caused by any cause found not to be the responsibility of Mitsubishi.

(2) Loss in opportunity, lost profits incurred to the user by Failures of Mitsubishi products.

(3) Special damages and secondary damages whether foreseeable or not, compensation for accidents, and compensation for damages to products other than Mitsubishi products.

(4) Replacement by the user, maintenance of on-site equipment, start-up test run and other tasks.

5. Changes in product specifications

The specifications given in the catalogs, manuals or technical documents are subject to change without prior notice.

TRADEMARKS

Windows is either registered trademarks or trademarks of Microsoft Corporation in the United States and/or other countries.
The company names, system names and product names mentioned in this manual are either registered trademarks or trademarks of their respective companies.
In some cases, trademark symbols such as '™' or '®' are not specified in this manual.

SH(NA)-082271ENG-A(2010)
MODEL:SW1DND-CCIETCT-U-E

MITSUBISHI ELECTRIC CORPORATION

HEAD OFFICE : TOKYO BUILDING, 2-7-3 MARUNOUCHI, CHIYODA-KU, TOKYO 100-8310, JAPAN
NAGOYA WORKS : 1-14 , YADA-MINAMI 5-CHOME , HIGASHI-KU, NAGOYA , JAPAN

When exported from Japan, this manual does not require application to the Ministry of Economy, Trade and Industry for service transaction permission.

Specifications subject to change without notice.