MITSUBISHI Energy Measuring Unit
EcoMonitorLight/EcoMonitorPlus Series

MODBUS I/F Specification

Model EMU4-BD1-MB, EMU4-HD1-MB
EMU4-BD1A-MB, EMU4-HD1A-MB
EMU4-BM1-MB, EMU4-HM1-MB
EMU4-LG1-MB
EMU4-A2,EMU4-VA2
EMU4-PX4,EMU4-AX4
EMU4-CNT-MB

SPEC.NO. **LSPY-9025-H**

This specification is as of Aug, 2023.
Please note that the contents are subject to change without notice.

MITSUBISHI ELECTRIC CORPORATION

- Table of contents -

1. Introduction 3
2. System configuration example 3
3. Technical Characteristic 3
4. Telegraph specifications 4
   4.1 Telegraph format 4
   4.2 Bit format of one byte for serial transmission 4
   4.3 Transmission timing 5
5. Format of query and response 7
   5.1 Register read function (03H) 7
   5.2 Batch write register function (10H) 7
   5.3 Diagnosis function (08H) (Sub function code: 00H) 8
6. Error handling and response in the event of error 9
7. Data specifications 10
   7.1 Register list 10
      7.1.1 EcoMonitorLight(EMU4-BD1-MB/ EMU4-HD1-MB) 11
         (1) Setting register 11
         (2) Instantaneous value monitor register 12
         (3) Electric energy, Reactive power monitor register 13
         (4) Harmonics phase voltage RMS monitor register 14
         (5) Harmonics line voltage RMS monitor register 15
         (6) Harmonics current RMS monitor register 16
         (7) Harmonics phase voltage distortion monitor register 17
         (8) Harmonics line voltage distortion monitor register 18
         (9) Harmonics current content rate monitor register 19
      7.1.2 EcoMonitorLight（EMU4-BD1A-MB/ EMU4-HD1A-MB） 20
         (1) Setting register 20
         (2) Instantaneous value monitor register 22
         (3) Max value monitor register 23
         (4) Min value monitor register 24
         (5) Setup register2 25
         (6) Electric energy, Reactive energy monitor register 27
         (7) Harmonics phase voltage RMS monitor register 29
         (8) Harmonics line voltage RMS monitor register 30
         (9) Harmonics current RMS monitor register 31
         (10) Harmonics phase voltage distortion monitor register 32
         (11) Harmonics line voltage distortion monitor register 33
         (12) Harmonics current content rate monitor register 34
         (13) Waveform band monitoring data monitor register 35
      7.1.3 EcoMonitorPlus（EMU4-BM1-MB/ EMU4-HM1-MB） 36
         (1) Setting register 36
         (2) Instantaneous value monitor register 38
         (3) Max value monitor register 39
         (4) Min value monitor register 40
         (5) Setup register2 41
         (6) Electric energy, Reactive power monitor register 43
         (7) Harmonics phase voltage RMS monitor register 45
         (8) Harmonics line voltage RMS monitor register 46
         (9) Harmonics current RMS monitor register 47
         (10) Harmonics phase voltage distortion monitor register 48
         (11) Harmonics line voltage distortion monitor register 49
         (12) Harmonics current content rate monitor register 50
      7.1.4 EcoMonitorPlus（EMU4-LG1-MB） 51
         (1) Setting register 51
         (2) Instantaneous/ Max value monitor register 52
         (3) Setup register2 53
         (4) Alarm setup register 54
      7.1.5 EcoMonitorPlus（EMU4-CNT-MB） 55
         (1) Setting register 55
         (2) Setting register2 56
      7.1.6 EcoMonitorPlus（EMU4-A2/EMU4-VA2）(For Circuit ID is 2) 57
         (1) Setup register 57
         (2) Instantaneous value monitor register 60
         (3) Max value monitor register 61
         (4) Min value monitor register 62
         (5) Electric energy and Reactive energy monitor register 63
         (6) Harmonics phase voltage instantaneous RMS monitor register 65
         (7) Harmonics line voltage instantaneous RMS monitor register 66

(8) Harmonics current instantaneous RMS monitor register 67
(9) Harmonics phase voltage instantaneous distortion monitor register 68
(10) Harmonics line voltage instantaneous distortion monitor register 69
(11) Harmonics current instantaneous content rate monitor register 70
7.1.7 EcoMonitorPlus（EMU4-PX4/ EMU4-AX4）(For Circuit ID is 2) 71
(1) Setup register 71
(2) Instantaneous value / Maximum value / Minimum value monitor register 74
(3) Integrated value monitor register 75
(4) The scaling value continuous data monitor register.(Only EMU4-AX4.) 76
7.1.8 EcoMonitorPlus（EMU4-A2/ EMU4-VA2/ EMU4-PX4/ EMU4-AX4）(For circuit ID=3～ and circuit ID=7) 84
7.2 Specifications of Register Data 84
7.2.1 Specifications of Register Data 85
7.2.2 Setting data for primary voltage (line voltage) 85
(1) EcoMonitorLight(EMU4-BD1-MB/ EMU4-HD1-MB) 85
(2) EcoMonitorLight(EMU4-BD1A-MB/ EMU4-HD1A-MB) 85
(3) EcoMonitorPlus(EMU4-BM1-MB/ EMU4-HM1-MB/EMU4-A2/EMU4-VA2) 86
7.2.3 Setting data for primary voltage (line voltage) 86
(1) EcoMonitorLight(EMU4-BD1-MB/ EMU4-HD1-MB) 86
(2) EcoMonitorLight(EMU4-BD1A-MB/ EMU4-HD1A-MB) 86
(3) EcoMonitorPlus(EMU4-BM1-MB/ EMU4-HM1-MB/EMU4-A2/EMU4-VA2) 86
7.2.4 Setting data for secondary voltage 87
7.2.5 Setting data for primary current 87
7.2.6 Setting data for alarm of demand current, alarm of electric power demand, alarm of leackage current. 87
7.2.7 16bit set / reset register 88
(1) EcoMonitorLight(EMU4-BD1-MB/ EMU4-HD1-MB), ... 88
(2) EcoMonitorPlus(EMU4-PX4 /EMU4-AX4) 90
(3) EcoMonitorPlus(EMU4-CNT-MB) 91
7.2.8 16bit monitor 92
(1) EcoMonitorLight(EMU4-BD1-MB/ EMU4-HD1-MB) 92
(2) EcoMonitorLight(EMU4-BD1A-MB/ EMU4-HD1A-MB) 92
(3) EcoMonitorPlus(EMU4-BM1-MB/ EMU4-HM1-MB/ EMU4-A2/ EMU4-VA2) 93
(4) EcoMonitorPlus(EMU4-PX4/ EMU4-AX4) 94
(5) EcoMonitorPlus(EMU4-CNT-MB) 94
7.2.9 16bit monitor2 95
7.2.10 Setting data for sensor type 96
7.2.11 Method of measuring operating time 96
7.2.12 Setting data for multiplying factor 96
7.2.13 Model code data 97
7.2.14 Unit of pulse output 97
7.2.15 Unit of pulse converted and unit of electric energy converted 97
7.2.16 Communication setting data 97
(1) Setting for MODBUS baudrate 97
(2) Setting for MODBUS parity 97
7.2.17 Setting for items of upper / lower alarm 98
7.2.18 Setting for value of upper / lower alarm 98
7.2.19 Setting for alarm mask 98
7.2.20 Setting for alarm of external output 99
7.2.21 Setting for the scaling value unit 99
7.2.22 Setting for Limit setting 99
7.2.23 Setting for option unit 99
7.3 Multiplying factor of monitor data 100
7.4 About the scaling value continuous data register. 102
7.4.1 Relation between analog input signal and the scaling value continuous data register. 102
7.4.2 About a reading way of the scaling value continuous data register. 103

1. Introduction

MITSUBISHI Energy Measuring Unit EcoMonitorLight/EcoMonitorPlus*1 transfers measured data to PCs and programmable controllers via RS-485 communication (MODBUS RTU protocol).

MODBUS is a trademark of Schneider Electric USA Inc.

*1:Model isshouwed below.

Series	Model
EcoMonitorLight	EMU4-BD1-MB, EMU4-HD1-MB, EMU4-BD1A-MB, EMU4-HD1A-MB
EcoMonitorPlus	EMU4-BM1-MB, EMU4-HM1-MB EMU4-LG1-MB EMU4-A2, EMU4-VA2, EMU4-PX4, EMU4-AX4 EMU4-CNT-MB

2. System configuration example

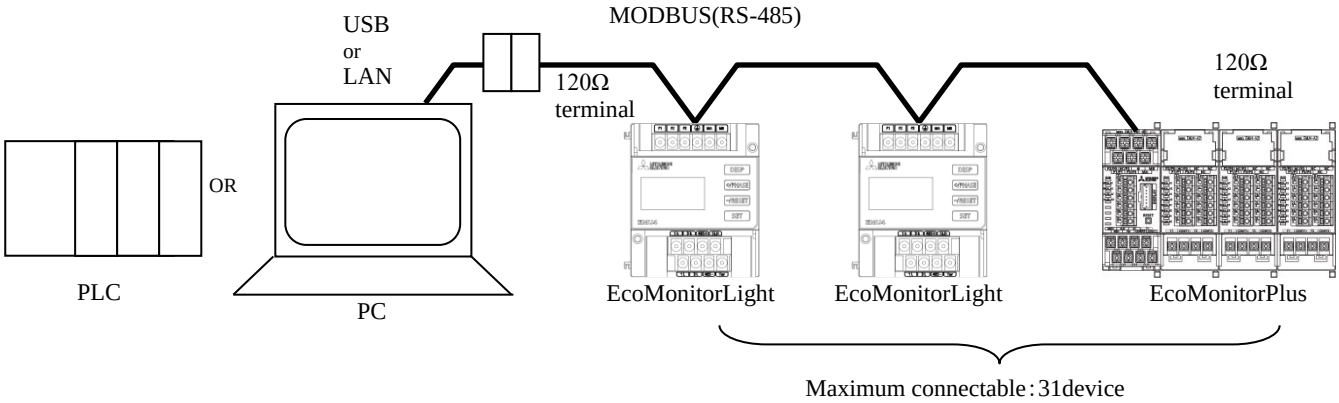

* EcoMonitorLight (EMU4-BD1-MB, EMU4-HD1-MB)/EcoMonitorPlus doubles as 120Ω (1/2W) terminal by connecting " 485-" and "Ter" terminals.

3. Technical Characteristic

Item	Specifications
Physical interface	RS-485 2wires half duplex
Protocol	ModBus RTU mode
Transmission method	Asynchronous
Transmission wiring type	Multi-point bus (either directly on the trunk cable, forming a daisy-chain)
Baud rate	2400, 4800, 9600, 19200, 38400bps (default: 19200bps)
Data bit	8
Stop bit	1, 2 (default: 1)
Parity	ODD,EVEN,NONE (default: EVEN)
Slave address	1～255 (FFh) (default: 1) 0: Broadcast
Response time	1s or shorter from completion of receiving query data to response transmission
Maximum transmission distance	1200m
Maximum connectable devices	31 devices
Termination resistor	120Ω 1/2W
Recommended cable	SPEV(SB)-MPC-0.2 × 3P (Fujikura Dia Cable)

* Transmission speed, parity, stop bit and slave address are configured in setting mode. To use Control unit(EMU4-CNT-MB), it is required to set it up with Control Unit Engineering Tool (EMU4-KNET).

4. Telegraph specifications

* For details of Modbus I/F specifications, refer to “Modbus over Serial Line Specification & Implementation guide” available on the following URL:

http://www.modbus.org/specs.php

4.1 Telegraph format

The transmission format of query and response is as follows:

Address	Function	Data	CRC Lo	CRC Hi

Address : 00H to FFH
The configurable address for each slave is the range from 01H to F7H.
00H is the address for broadcast, and in broadcast all slaves execute the function.
F8h-FFh (248-255) is Reserve.

Function : 03H····· Read register (Monitor)
: 08H····· Diagnosis
: 10H····· Batch write register (Batch configuration)

Data : 8-bit HEX data

CRC : 16-bit CRC from Address to Data ·····$X^{16} + X^{15} + X^2 + 1$

<Reference> Computation of CRC

1) Input “FFFFh” into CRC register.
2) Input the exclusive OR of the first character of the message and the lower byte of CRC register into CRC register.
3) Shift CRC register to right by one bit.
4) If LSB of CRC register is 0, repeat 3) until it becomes 1.
   If LSB of CRC register is 1, input the exclusive OR of CRC register and the generating polynomial A001h into CRC register.
5) Repeat 3) and 4) until CRC register is shifted by eight bits.
6) Repeat 2) to 5) for the other characters in the same way to apply to all bytes of the message.
7) The last value of CRC register becomes CRC.

4.2 Bit format of one byte for serial transmission

Transfer one byte in following order (from left to right).

・ If parity is not “NONE”, and stop bit is “1”.

Start	1	2	3	4	5	6	7	8	Parity	Stop
	LSB							MSB		

・ If parity is “NONE”, and stop bit is “2”.

Start	1	2	3	4	5	6	7	8	Stop	Stop
	LSB							MSB		

4.3 Transmission timing

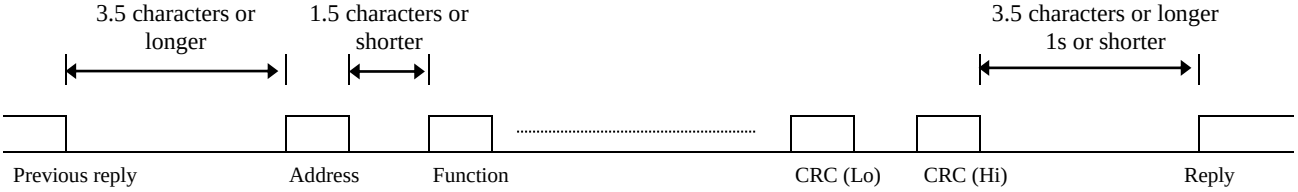

Transmission timing

You need to set the idling for 3.5 characters or longer before and after each transmission text.
The response is sent within one second of the receipt of query.（for detail, refer the table below）
Each data is sent at 1.5-character or longer interval.
If the transferred data interval becomes longer than 3.5 characters, transmission is finished and received data is discarded. In this case, the data after interval is considered as the beginning address of new query.

<Reference>

Data interval

Transmission speed	3.5 characters		1.5 characters	
	Stop bit: 1 Parity: 1	Stop bit: 1 Parity: NONE	Stop bit: 1 Parity: 1	Stop bit: 1 Parity: NONE
2400 bps	16.04ms	14.58ms	6.88ms	6.25ms
4800 bps	8.02ms	7.29ms	3.44ms	3.13ms
9600 bps	4.01ms	3.65ms	1.72ms	1.56ms
19200 bps	2.00ms	1.82ms	0.86ms	0.78ms
38400 bps	1.00ms	0.91ms	0.43ms	0.39ms

Transmission time in case of EcoMonitorLight(EMU4-BD1-MB, EMU4-HD1-MB). (Transmission speed: 38400bps)

Number of batch monitor register (byte)	Query send time	Response time（Mean time from finish of receipt to start of sending: for reference）	Reply send time	Total time
1 register (2 bytes)	2.28ms	2.34ms	2.10ms	6.72ms
10 registers (20 bytes)	2.28ms	4.14ms	7.26ms	13.68ms
40 registers (80bytes)	2.28ms	14.02ms	24.60ms	40.90ms

* Stop bit: 1, parity bit: 1, data interval is configured to 0.

Transmission time in case of EcoMonitorLight(EMU4-BD1A-MB, EMU4-HD1A-MB). (Transmission speed: 38400bps)

Number of batch monitor register (byte)	Query send time	Response time（Mean time from finish of receipt to start of sending: for reference）	Reply send time	Total time
1 register (2 bytes)	2.28ms	44.62ms	2.10ms	49.00ms
10 registers (20 bytes)	2.28ms	58.62ms	7.26ms	63.00ms
40 registers (80bytes)	2.28ms	72.62ms	24.60ms	77.00ms

* Stop bit: 1, parity bit: 1, data interval is configured to 0.

Transmission time in case of EcoMonitorPlus(excluding Control unit(EMU4-CNT-MB)). (Transmission speed: 38400bps)

Number of batch monitor register (byte)	Query send time	Response time（Mean time from finish of receipt to start of sending: for reference）	Reply send time	Total time
1 register (2 bytes)	2.34ms	72.30ms	2.02ms	76.66ms
10 registers (20 bytes)	2.34ms	304.24ms	7.25ms	313.83ms
40 registers (80bytes)	2.34ms	733.15ms	24.55ms	760.04ms

* Stop bit: 1, parity bit: 1, data interval is configured to 0.

Transmission time in case of EcoMonitorPlus(EMU4-CNT-MB). (Transmission speed: 38400bps)

Number of batch monitor register (byte)	Query send time	Response time（Mean time from finish of receipt to start of sending: for reference）	Reply send time	Total time
1 register (2 bytes)	2.34ms	11.64ms	2.02ms	16.00ms
10 registers (20 bytes)	2.34ms	10.91ms	7.25ms	20.50ms

* Stop bit: 1, parity bit: 1, data interval is configured to 0.

Transmission time in case of the scaling value continuous data register of EcoMonitorPlus (EMU4-AX4). (Transmission speed: 38400bps)

Number of batch monitor register (byte)	Query send time	Response time (Mean time from finish of receipt to start of sending: for reference)	Reply send time	Total time
101 registers (202 bytes)	2.34ms	10.26ms	58.80ms	71.40ms

* Stop bit: 1, parity bit: 1, data interval is configured to 0.
* To make the response time high-speed, the scaling value continuous data register is doing exclusive processing.

The above-mentioned data is a reference value, transmission time is not guaranteed.

5. Format of query and response

5.1 Register read function (03H)

■ Query format

**H	03H	Hi	Lo	Hi	Lo	Lo	Hi
Address	Function	Start address		Number of register		CRC	

・Address : Slave address 01H to FFH
・Function : 03H (Read register)
・Start address : Register address 2 bytes
・Number of register : Number of read word (Maximum: 125)
・CRC : Error check code

■ Response format (Maximum 255 bytes)

**H	03H	**H	Hi	Lo	Hi	Lo		Lo	Hi
Address		Number of byte	Data 1		Data 2			CRC	

・Number of byte : Number of byte for response data (Maximum: 250)

<Example 1> In case of monitoring the present value of 2-phase current (Address: 0301H) (Slave address: 01H)

■ Query format

01H	03H	03H	01H	00H	01H	Lo	Hi
Address	Function	Start address		Number of register		CRC	

■ Response format

01H	03H	02H	Hi	Lo	Lo	Hi
Address	Function	Number of byte	Present value of 2-phase current		CRC	

<Example 2> In case of monitoring from “the present value of 1-phase current (Address: 0300H)” to “the present value of N-phase current (Address: 0303H)” (Slave address: 01H)

■ Query format

01H	03H	03H	00H	00H	04H	Lo	Hi
Address	Function	Start address		Number of register		CRC	

■ Response format

01H	03H	08H	Hi	Lo	Hi	Lo	Hi	Lo	Hi	Lo	Lo	Hi
Address	Function	Number of byte	Present value of 1-phase current		Present value of 2-phase current		Present value of 3-phase current		Present value of N-phase current		CRC	

5.2 Batch write register function (10H)

■ Query format (Maximum 255 bytes)

**H	10H	Hi	Lo	Hi	Lo		Hi	Lo	Hi	Lo		Lo	Hi
Address	Function	Start address		Number of register		Number of byte	Data 1		Data 2			CRC	

・Address : Slave address 00H to FFH (00H: Broadcast)
・Function : 10H (Batch write register)
・Start address : Register address 2byte
・Number of register : Number of write word (Maximum: 123)
・Number of byte : Number of write byte (The double of number of write word) (Maximum: 246)
・Data 1 - : Write data
・CRC : Error check code

■ Response format

**H	10H	Hi	Lo	Hi	Lo	Lo	Hi
Address	Function	Start address		Number of register		CRC	

<Example> In case of setting the primary current (Address: 0207H) (Slave address: 01H)

■ Query format

01H	10H	02H	07H	00H	02H	04H	HH	HL	LH	LL	Lo	Hi
Address	Function	Start address		Number of register		Number of byte	Primary current data H		Primary current data L		CRC	

■ Response format

01H	10H	02H	07H	00H	02H	Lo	Hi
Address	Function	Start address		Number of register		CRC	

5.3 Diagnosis function (08H) (Sub function code: 00H）

■ Query format

**H	08H	00H	00H	Hi	Lo	Lo	Hi
Address	Function	Sub function code		Data		CRC	

・Address : Slave address 01H to FFH
・Function : 08H (Diagnosis)
・Sub function code : Fixed to 00H, 00H
・Data : Given data
・CRC : Error check code

■ Response format

**H	08H	00H	00H	Hi	Lo	Lo	Hi
Address	Function	Sub function code		Data		CRC	

・Data : The same data as query

6. Error handling and response in the event of error

Error list

Error item	Error content	Handling	Error indication
Framing error	Receive the next data before reading the UART receipt buffer.	Not return error response and transition to waiting data receipt.	Nothing
Overrun error	Not correct one byte data length.		
Parity error	Not correct parity bit.		
CRC check error	Not correct CRC error check code		
Illegal function	Receive function except for ‘03’, ‘08’ or ‘10’.	Response the error code 01.	
Register address error	Requested register address does not exist. <If the basic unit is EMU4-CNT-MB, including the following.> While the control operation state is RUN, the current time of EMU4-CNT-MB or the set value of the extension unit was changed.	Response the error code 02.	
Data value error	Data is out of allowable range. The number of word for setting item disagrees with that of word for setting value data. < If the basic unit is EMU4-CNT-MB, including the following.> Whie the control operation state is STOP and the setting is being changed, the control operation state have been changed.	Response the error code 03.	
Slave busy	While changing setting value.	Response the error code 06.	

Response format

Address	Error function code	Error code	Lo	Hi
Slave address			CRC	

・Error function code : Set “1” to the highest-order bit of each function code

<Reference> Examples of error function code

Function code	Error function code
03H	83H
08H	88H
10H	90H

・Error code

Illegal function : 01H
Register address error : 02H
Data value error : 03H
Slave busy : 06H

Example of register address error is as follow:

<Example> In case of monitoring from “the minimum of average apparent power (Address: 0380H)” to “All devices not supported (Address: 0387H)” (Slave address: 01H)

■ Query format

01H	03H	03H	80H	00H	08H	Lo	Hi
Address	Function	Start address		Number of register		CRC	

■ Response format

01H	83H	02H	Lo	Hi
Address	Error function code	Register address error	CRC	

7. Data specifications

7.1 Register list

item	substance
R/W	Readable and writeable register. In a write operation, if the setting data is 8000h (2-byte data）or 80000000h (4-byte data), the data in address concerned is not changed. (If you do batch setting, use them for the address which is not set.）
R	Read only register. If you perform a write operation to these registers, the error code 02h is responded.

item	substance
○	Support
△	Not used (Register addresses of these items are defined, but they are not measured.) For these registers, if they are read, “0” is responded.
×	Error If you perform a read /write operation to these registers, the error code 02h is responded.

<About data>
The data of negative value is represented by two’s complement.
The data is a big endian.
The data can convert to the measured value by unit in the table and multiplying factor indicated in section 7.2.

<About 4 bytes of data>
Please replace upper register data and lower register data when acquire 4 bytes data.
4th，8th，12th，16th，20th and 24th byte from even address are only accessible for the data of address 0518h to 0522h.
Address error 02h is responded by the access starting from odd address such as 0519h, 051Bh and so on.
It is also responded by the access to 2nd，3rd，5th and 6th byte from the address such as 0518h, 051Ah and so on.

<About register types>
All listed registers are holding registers.

7.1.1 EcoMonitorLight(EMU4-BD1-MB/ EMU4-HD1-MB)

(1) Setting register

Register address		Number of byte	R/W	Register name	RANGE	Unit	Support				
							EMU4-BD1-MB		EMU4-HD1-MB		
Decimal	Hex						1P2W	1P3W 3P3W	1P2W	1P3W 3P3W	3P4W
512	0200h	2	R/W	Phase wire system	1 to 4	-	○	○	○	○	○
513	0201h	4	R/W	Primary voltage (L-L: line voltage)	1 to 6600	V	○	○	○	○	○
515	0203h	4	R/W	Primary voltage (L-N: phase voltage)	10 to 66000	×0.1V	△	△	△	△	○
517	0205h	4	R/W	Secondary voltage	10 to 2200	×0.1V	○	○	○	○	○
519	0207h	4	R/W	Primary current	50 to 60000	×0.1A	○	○	○	○	○
521	0209h	2	R/W	Electric power demand time	0 to 1800	s	○	○	○	○	○
522	020Ah	2	R/W	Current demand time	0 to 1800	s	○	○	○	○	○
523	020Bh	2	R/W	16 bits Set/Reset register	Refer to 7.2.7 16bit set / reset register	-	○	○	○	○	○
524	020Ch	2	R	16 bits monitor	Refer to 7.2.8 16bit monitor	-	△	△	○	○	○
525	020Dh	2	R	N/A	-	-	△	△	△	△	△
526	020Eh	2	R	N/A	-	-	△	△	△	△	△
527	020Fh	2	R	N/A	-	-	△	△	△	△	△
528	0210h	2	R	N/A	-	-	△	△	△	△	△
529	0211h	2	R	N/A	-	-	△	△	△	△	△
530	0212h	2	R	N/A	-	-	△	△	△	△	△
531	0213h	2	R/W	5A input change (Sensor type)	0: Direct, 2: 5A	-	○	○	○	○	○
753	02F1h	2	R/W	Measuring method of operating time	1: By current, 2: By contact	-	△	△	○	○	○
754	02F2h	2	R	Multiplying factor of current	-127 to 127	-	○	○	○	○	○
755	02F3h	2	R	Multiplying factor of voltage	-127 to 127	-	○	○	○	○	○
756	02F4h	2	R	Multiplying factor of electric power	-127 to 127	-	○	○	○	○	○
757	02F5h	2	R	Multiplying factor of electric energy	-127 to 127	-	○	○	○	○	○
758	02F6h	2	R	Multiplying factor of power factor	-127 to 127	-	○	○	○	○	○
759	02F7h	2	R	Multiplying factor of frequency	-127 to 127	-	○	○	○	○	○
760	02F8h	2	R	Multiplying factor of content rate of harmonic current	-127 to 127	-	△	△	○	○	○
761	02F9h	2	R	Multiplying factor of content rate of harmonic voltage	-127 to 127	-	△	△	○	○	○
762	02FAh	2	R	Multiplying factor of detail electric energy	-127 to 127	-	○	○	○	○	○
763	02FBh	2	R	Model code	Refer to 7.2.13 Model code data	-	○	○	○	○	○

(2) Instantaneous value monitor register

Register address		Number of byte	R/W	Register name	RANGE	Unit	Support				
							EMU4-BD1-MB		EMU4-HD1-MB		
Decimal	Hex						1P2W	1P3W 3P3W	1P2W	1P3W 3P3W	3P4W
768	0300h	2	R	Phase 1 current	0 to 32767	A	○	○	○	○	○
769	0301h	2	R	Phase 2 current	0 to 32767	A	△	○	△	○	○
770	0302h	2	R	Phase 3 current	0 to 32767	A	△	○	△	○	○
771	0303h	2	R	Neutral current	0 to 32767	A	△	△	△	△	○
772	0304h	2	R	Average value current	0 to 32767	A	○	○	○	○	○
773	0305h	2	R	Phase 1 current demand	0 to 32767	A	○	○	○	○	○
774	0306h	2	R	Phase 2 current demand	0 to 32767	A	△	○	△	○	○
775	0307h	2	R	Phase 3 current demand	0 to 32767	A	△	○	△	○	○
776	0308h	2	R	Neutral current demand	0 to 32767	A	△	△	△	△	○
777	0309h	2	R	N/A	-	-	△	△	△	△	△
778	030Ah	2	R	Voltage V12	0 to 32767	V	○	○	○	○	○
779	030Bh	2	R	Voltage V23	0 to 32767	V	△	○	△	○	○
780	030Ch	2	R	Voltage V31	0 to 32767	V	△	○	△	○	○
781	030Dh	2	R	Average value voltage (L-L)	0 to 32767	V	○	○	○	○	○
782	030Eh	2	R	Voltage V1N	0 to 32767	V	△	△	△	△	○
783	030Fh	2	R	Voltage V2N	0 to 32767	V	△	△	△	△	○
784	0310h	2	R	Voltage V3N	0 to 32767	V	△	△	△	△	○
785	0311h	2	R	Average value voltage (L-N)	-	-	△	△	△	△	△
786	0312h	2	R	Phase 1 power factor	-	-	△	△	△	△	△
787	0313h	2	R	Phase 2 power factor	-	-	△	△	△	△	△
788	0314h	2	R	Phase 3 power factor	-	-	△	△	△	△	△
789	0315h	2	R	Σ Power factor	-1 to +1000 to 0	×0.1%	○	○	○	○	○
790	0316h	2	R	Frequency	445 to 999	×0.1Hz	○	○	○	○	○
791	0317h	2	R	Phase 1 active power	-	-	△	△	△	△	△
792	0318h	2	R	Phase 2 active power	-	-	△	△	△	△	△
793	0319h	2	R	Phase 3 active power	-	-	△	△	△	△	△
794	031Ah	2	R	Σ Active power	-32767 to 32767	kW	○	○	○	○	○
795	031Bh	2	R	Phase 1 active power demand	-		△	△	△	△	△
796	031Ch	2	R	Phase 2 active power demand	-		△	△	△	△	△
797	031Dh	2	R	Phase 3 active power demand	-		△	△	△	△	△
798	031Eh	2	R	Σ Active power demand	-32767 to 32767	kW	○	○	○	○	○
799	031Fh	2	R	Phase 1 reactive power	-	-	△	△	△	△	△
800	0320h	2	R	Phase 2 reactive power	-	-	△	△	△	△	△
801	0321h	2	R	Phase 3 reactive power	-	-	△	△	△	△	△
802	0322h	2	R	Σ Reactive power	-32767 to 32767	kvar	○	○	○	○	○
803	0323h	2	R	Phase 1 apparent power	-	-	△	△	△	△	△
804	0324h	2	R	Phase 2 apparent power	-	-	△	△	△	△	△
805	0325h	2	R	Phase 3 apparent power	-	-	△	△	△	△	△
806	0326h	2	R	Σ Apparent power	-32767 to 32767	kVA	△	△	△	△	○

(3) Electric energy, Reactive power monitor register

Register address		Number of byte	R/W	Register name		RANGE	Unit	Support				
								EMU4-BD1-MB		EMU4-HD1-MB		
Decimal	Hex							1P2W	1P3W 3P3W	1P2W	1P3W 3P3W	3P4W
1280	0500h	2	R	Integrated electric energy (*1) (Lower)	import	Less than 1000	kWh	○	○	○	○	○
1281	0501h	2	R	Integrated electric energy (*1) (Higher)		1000 or more		○	○	○	○	○
1282	0502h	2	R	Integrated electric energy (*1) (Lower)	export	Less than 1000	kWh	○	○	○	○	○
1283	0503h	2	R	Integrated electric energy (*1) (Higher)		1000 or more		○	○	○	○	○
1284	0504h	2	R	Reactive energy (*1) (Lower)	import LAG	Less than 1000	kvarh	○	○	○	○	○
1285	0505h	2	R	Reactive energy (*1) (Higher)		1000 or more		○	○	○	○	○
1286	0506h	2	R	N/A	-	-	-	△	△	△	△	△
1287	0507h	2	R					△	△	△	△	△
1288	0508h	2	R	N/A	-	-	-	△	△	△	△	△
1289	0509h	2	R					△	△	△	△	△
1290	050Ah	2	R	N/A	-	-	-	△	△	△	△	△
1291	050Bh	2	R					△	△	△	△	△
1292	050Ch	2	R	N/A	-	-	-	△	△	△	△	△
1293	050Dh	2	R					△	△	△	△	△
1294	050Eh	2	R	N/A	-	-	-	△	△	△	△	△
1295	050Fh	2	R					△	△	△	△	△
1296	0510h	2	R	N/A	-	-	-	△	△	△	△	△
1297	0511h	2	R					△	△	△	△	△
1298	0512h	2	R	N/A	-	-	-	△	△	△	△	△
1299	0513h	2	R					△	△	△	△	△
1300	0514h	2	R	N/A	-	-	-	△	△	△	△	△
1301	0515h	2	R					△	△	△	△	△
1302	0516h	2	R	N/A	-	-	-	△	△	△	△	△
1303	0517h	2	R					△	△	△	△	△
1304	0518h	4	R/W	Integrated electric energy	import	0 to 999999	kWh	○	○	○	○	○
1306	051Ah	4	R/W	Integrated electric energy	export	0 to 999999	kWh	○	○	○	○	○
1308	051Ch	4	R/W	Reactive energy	import LAG	0 to 999999	kvarh	○	○	○	○	○
1310	051Eh	4	R	N/A	-	-	-	△	△	△	△	△
1312	0520h	4	R	N/A	-	-	-	△	△	△	△	△
1314	0522h	4	R	N/A	-	-	-	△	△	△	△	△
1316	0524h	4	R	Integrated electric energy(extended)	import	0 to 999999	kWh	○	○	○	○	○
1318	0526h	4	R	Integrated electric energy(extended)	export	0 to 999999	kWh	○	○	○	○	○
1320	0528h	4	R	Reactive energy(extended)	import LAG	0 to 999999	kvarh	○	○	○	○	○
1374	055Eh	4	R/W	Periodic electric energy	import	0 to 999999	kWh	△	△	○	○	○
1376	0560h	4	R/W	Pulse count		0 to 999999	-	△	△	○	○	○
1378	0562h	4	R/W	Operating time		0 to 999999	h	○	○	○	○	○

*1:These 6-digit energy values are responded by dividing into upper and lower three digits.

<Example> In case of Integrated electric energy is 12345.6 kWh.(Full load power：120kW or more and less than 1200kW)

Register address		Response data (Decimal)
1280	0500h	456
1281	0501h	123
1304	0518h	123456

(4) Harmonics phase voltage RMS monitor register

Register address		Number of byte	R/W	Register name		RANGE	Unit	Support				
								EMU4-BD1-MB		EMU4-HD1-MB		
Decimal	Hex							1P2W	1P3W 3P3W	1P2W	1P3W 3P3W	3P4W
1792	0700h	2	R	Harmonics value V1N	Total	0 to 32767	V	△	△	△	△	○
1793	0701h	2	R	Harmonics value V2N	Total	0 to 32767	V	△	△	△	△	○
1794	0702h	2	R	Harmonics value V3N	Total	0 to 32767	V	△	△	△	△	○
1795	0703h	2	R	Harmonics value V1N	1st	0 to 32767	V	△	△	△	△	○
1796	0704h	2	R	Harmonics value V2N	1st	0 to 32767	V	△	△	△	△	○
1797	0705h	2	R	Harmonics value V3N	1st	0 to 32767	V	△	△	△	△	○
1798	0706h	2	R	Harmonics value V1N	3rd	0 to 32767	V	△	△	△	△	○
1799	0707h	2	R	Harmonics value V2N	3rd	0 to 32767	V	△	△	△	△	○
1800	0708h	2	R	Harmonics value V3N	3rd	0 to 32767	V	△	△	△	△	○
1801	0709h	2	R	Harmonics value V1N	5th	0 to 32767	V	△	△	△	△	○
1802	070Ah	2	R	Harmonics value V2N	5th	0 to 32767	V	△	△	△	△	○
1803	070Bh	2	R	Harmonics value V3N	5th	0 to 32767	V	△	△	△	△	○
1804	070Ch	2	R	Harmonics value V1N	7th	0 to 32767	V	△	△	△	△	○
1805	070Dh	2	R	Harmonics value V2N	7th	0 to 32767	V	△	△	△	△	○
1806	070Eh	2	R	Harmonics value V3N	7th	0 to 32767	V	△	△	△	△	○
1807	070Fh	2	R	Harmonics value V1N	9th	0 to 32767	V	△	△	△	△	○
1808	0710h	2	R	Harmonics value V2N	9th	0 to 32767	V	△	△	△	△	○
1809	0711h	2	R	Harmonics value V3N	9th	0 to 32767	V	△	△	△	△	○
1810	0712h	2	R	Harmonics value V1N	11th	0 to 32767	V	△	△	△	△	○
1811	0713h	2	R	Harmonics value V2N	11th	0 to 32767	V	△	△	△	△	○
1812	0714h	2	R	Harmonics value V3N	11th	0 to 32767	V	△	△	△	△	○
1813	0715h	2	R	Harmonics value V1N	13th	0 to 32767	V	△	△	△	△	○
1814	0716h	2	R	Harmonics value V2N	13th	0 to 32767	V	△	△	△	△	○
1815	0717h	2	R	Harmonics value V3N	13th	0 to 32767	V	△	△	△	△	○

(5) Harmonics line voltage RMS monitor register

Register address		Number of byte	R/W	Register name		RANGE	Unit	Support				
								EMU4-BD1-MB		EMU4-HD1-MB		
Decimal	Hex							1P2W	1P3W 3P3W	1P2W	1P3W 3P3W	3P4W
2048	0800h	2	R	Harmonics value V12	Total	0 to 32767	V	△	△	○	○	△
2049	0801h	2	R	Harmonics value V23	Total	0 to 32767	V	△	△	△	○	△
2050	0802h	2	R	N/A	-	-	-	△	△	△	△	△
2051	0803h	2	R	Harmonics value V12	1st	0 to 32767	V	△	△	○	○	△
2052	0804h	2	R	Harmonics value V23	1st	0 to 32767	V	△	△	△	○	△
2053	0805h	2	R	N/A	-	-	-	△	△	△	△	△
2054	0806h	2	R	Harmonics value V12	3rd	0 to 32767	V	△	△	○	○	△
2055	0807h	2	R	Harmonics value V23	3rd	0 to 32767	V	△	△	△	○	△
2056	0808h	2	R	N/A	-	-	-	△	△	△	△	△
2057	0809h	2	R	Harmonics value V12	5th	0 to 32767	V	△	△	○	○	△
2058	080Ah	2	R	Harmonics value V23	5th	0 to 32767	V	△	△	△	○	△
2059	080Bh	2	R	N/A	-	-	-	△	△	△	△	△
2060	080Ch	2	R	Harmonics value V12	7th	0 to 32767	V	△	△	○	○	△
2061	080Dh	2	R	Harmonics value V23	7th	0 to 32767	V	△	△	△	○	△
2062	080Eh	2	R	N/A	-	-	-	△	△	△	△	△
2063	080Fh	2	R	Harmonics value V12	9th	0 to 32767	V	△	△	○	○	△
2064	0810h	2	R	Harmonics value V23	9th	0 to 32767	V	△	△	△	○	△
2065	0811h	2	R	N/A	-	-	-	△	△	△	△	△
2066	0812h	2	R	Harmonics value V12	11th	0 to 32767	V	△	△	○	○	△
2067	0813h	2	R	Harmonics value V23	11th	0 to 32767	V	△	△	△	○	△
2068	0814h	2	R	N/A	-	-	-	△	△	△	△	△
2069	0815h	2	R	Harmonics value V12	13th	0 to 32767	V	△	△	○	○	△
2070	0816h	2	R	Harmonics value V23	13th	0 to 32767	V	△	△	△	○	△
2071	0817h	2	R	N/A	-	-	-	△	△	△	△	△

(6) Harmonics current RMS monitor register

Register address		Number of byte	R/W	Register name		RANGE	Unit	Support				
								EMU4-BD1-MB		EMU4-HD1-MB		
Decimal	Hex							1P2W	1P3W 3P3W	1P2W	1P3W 3P3W	3P4W
2304	0900h	2	R	Harmonics value I1	Total	0 to 32767	A	△	△	○	○	○
2305	0901h	2	R	Harmonics value I2	Total	0 to 32767	A	△	△	△	△	○
2306	0902h	2	R	Harmonics value I3	Total	0 to 32767	A	△	△	△	○	○
2307	0903h	2	R	Harmonics value IN	Total	0 to 32767	A	△	△	△	△	○
2308	0904h	2	R	Harmonics value I1	1st	0 to 32767	A	△	△	○	○	○
2309	0905h	2	R	Harmonics value I2	1st	0 to 32767	A	△	△	△	△	○
2310	0906h	2	R	Harmonics value I3	1st	0 to 32767	A	△	△	△	○	○
2311	0907h	2	R	Harmonics value IN	1st	0 to 32767	A	△	△	△	△	○
2312	0908h	2	R	Harmonics value I1	3rd	0 to 32767	A	△	△	○	○	○
2313	0909h	2	R	Harmonics value I2	3rd	0 to 32767	A	△	△	△	△	○
2314	090Ah	2	R	Harmonics value I3	3rd	0 to 32767	A	△	△	△	○	○
2315	090Bh	2	R	Harmonics value IN	3rd	0 to 32767	A	△	△	△	△	○
2316	090Ch	2	R	Harmonics value I1	5th	0 to 32767	A	△	△	○	○	○
2317	090Dh	2	R	Harmonics value I2	5th	0 to 32767	A	△	△	△	△	○
2318	090Eh	2	R	Harmonics value I3	5th	0 to 32767	A	△	△	△	○	○
2319	090Fh	2	R	Harmonics value IN	5th	0 to 32767	A	△	△	△	△	○
2320	0910h	2	R	Harmonics value I1	7th	0 to 32767	A	△	△	○	○	○
2321	0911h	2	R	Harmonics value I2	7th	0 to 32767	A	△	△	△	△	○
2322	0912h	2	R	Harmonics value I3	7th	0 to 32767	A	△	△	△	○	○
2323	0913h	2	R	Harmonics value IN	7th	0 to 32767	A	△	△	△	△	○
2324	0914h	2	R	Harmonics value I1	9th	0 to 32767	A	△	△	○	○	○
2325	0915h	2	R	Harmonics value I2	9th	0 to 32767	A	△	△	△	△	○
2326	0916h	2	R	Harmonics value I3	9th	0 to 32767	A	△	△	△	○	○
2327	0917h	2	R	Harmonics value IN	9th	0 to 32767	A	△	△	△	△	○
2328	0918h	2	R	Harmonics value I1	11th	0 to 32767	A	△	△	○	○	○
2329	0919h	2	R	Harmonics value I2	11th	0 to 32767	A	△	△	△	△	○
2330	091Ah	2	R	Harmonics value I3	11th	0 to 32767	A	△	△	△	○	○
2331	091Bh	2	R	Harmonics value IN	11th	0 to 32767	A	△	△	△	△	○
2332	091Ch	2	R	Harmonics value I1	13th	0 to 32767	A	△	△	○	○	○
2333	091Dh	2	R	Harmonics value I2	13th	0 to 32767	A	△	△	△	△	○
2334	091Eh	2	R	Harmonics value I3	13th	0 to 32767	A	△	△	△	○	○
2335	091Fh	2	R	Harmonics value IN	13th	0 to 32767	A	△	△	△	△	○

(7) Harmonics phase voltage distortion monitor register

Register address		Number of byte	R/W	Register name		RANGE	Unit	Support				
								EMU4-BD1-MB		EMU4-HD1-MB		
Decimal	Hex							1P2W	1P3W 3P3W	1P2W	1P3W 3P3W	3P4W
2560	0A00h	2	R	THD V1N	Total	0 to 1000	×0.1%	△	△	△	△	○
2561	0A01h	2	R	THD V2N	Total	0 to 1000	×0.1%	△	△	△	△	○
2562	0A02h	2	R	THD V3N	Total	0 to 1000	×0.1%	△	△	△	△	○
2563	0A03h	2	R	Harmonics ratio V1N	3rd	0 to 1000	×0.1%	△	△	△	△	○
2564	0A04h	2	R	Harmonics ratio V2N	3rd	0 to 1000	×0.1%	△	△	△	△	○
2565	0A05h	2	R	Harmonics ratio V3N	3rd	0 to 1000	×0.1%	△	△	△	△	○
2566	0A06h	2	R	Harmonics ratio V1N	5th	0 to 1000	×0.1%	△	△	△	△	○
2567	0A07h	2	R	Harmonics ratio V2N	5th	0 to 1000	×0.1%	△	△	△	△	○
2568	0A08h	2	R	Harmonics ratio V3N	5th	0 to 1000	×0.1%	△	△	△	△	○
2569	0A09h	2	R	Harmonics ratio V1N	7th	0 to 1000	×0.1%	△	△	△	△	○
2570	0A0Ah	2	R	Harmonics ratio V2N	7th	0 to 1000	×0.1%	△	△	△	△	○
2571	0A0Bh	2	R	Harmonics ratio V3N	7th	0 to 1000	×0.1%	△	△	△	△	○
2572	0A0Ch	2	R	Harmonics ratio V1N	9th	0 to 1000	×0.1%	△	△	△	△	○
2573	0A0Dh	2	R	Harmonics ratio V2N	9th	0 to 1000	×0.1%	△	△	△	△	○
2574	0A0Eh	2	R	Harmonics ratio V3N	9th	0 to 1000	×0.1%	△	△	△	△	○
2575	0A0Fh	2	R	Harmonics ratio V1N	11th	0 to 1000	×0.1%	△	△	△	△	○
2576	0A10h	2	R	Harmonics ratio V2N	11th	0 to 1000	×0.1%	△	△	△	△	○
2577	0A11h	2	R	Harmonics ratio V3N	11th	0 to 1000	×0.1%	△	△	△	△	○
2578	0A12h	2	R	Harmonics ratio V1N	13th	0 to 1000	×0.1%	△	△	△	△	○
2579	0A13h	2	R	Harmonics ratio V2N	13th	0 to 1000	×0.1%	△	△	△	△	○
2580	0A14h	2	R	Harmonics ratio V3N	13th	0 to 1000	×0.1%	△	△	△	△	○

(8) Harmonics line voltage distortion monitor register

Register address		Number of byte	R/W	Register name		RANGE	Unit	Support				
								EMU4-BD1-MB		EMU4-HD1-MB		
Decimal	Hex							1P2W	1P3W 3P3W	1P2W	1P3W 3P3W	3P4W
2816	0B00h	2	R	THD V12	Total	0 to 1000	×0.1%	△	△	○	○	△
2817	0B01h	2	R	THD V23	Total	0 to 1000	×0.1%	△	△	△	○	△
2818	0B02h	2	R	N/A	-	-	-	△	△	△	△	△
2819	0B03h	2	R	Harmonics ratio V12	3rd	0 to 1000	×0.1%	△	△	○	○	△
2820	0B04h	2	R	Harmonics ratio V23	3rd	0 to 1000	×0.1%	△	△	△	○	△
2821	0B05h	2	R	N/A	-	-	-	△	△	△	△	△
2822	0B06h	2	R	Harmonics ratio V12	5th	0 to 1000	×0.1%	△	△	○	○	△
2823	0B07h	2	R	Harmonics ratio V23	5th	0 to 1000	×0.1%	△	△	△	○	△
2824	0B08h	2	R	N/A	-	-	-	△	△	△	△	△
2825	0B09h	2	R	Harmonics ratio V12	7th	0 to 1000	×0.1%	△	△	○	○	△
2826	0B0Ah	2	R	Harmonics ratio V23	7th	0 to 1000	×0.1%	△	△	△	○	△
2827	0B0Bh	2	R	N/A	-	-	-	△	△	△	△	△
2828	0B0Ch	2	R	Harmonics ratio V12	9th	0 to 1000	×0.1%	△	△	○	○	△
2829	0B0Dh	2	R	Harmonics ratio V23	9th	0 to 1000	×0.1%	△	△	△	○	△
2830	0B0Eh	2	R	N/A	-	-	-	△	△	△	△	△
2831	0B0Fh	2	R	Harmonics ratio V12	11th	0 to 1000	×0.1%	△	△	○	○	△
2832	0B10h	2	R	Harmonics ratio V23	11th	0 to 1000	×0.1%	△	△	△	○	△
2833	0B11h	2	R	N/A	-	-	-	△	△	△	△	△
2834	0B12h	2	R	Harmonics ratio V12	13th	0 to 1000	×0.1%	△	△	○	○	△
2835	0B13h	2	R	Harmonics ratio V23	13th	0 to 1000	×0.1%	△	△	△	○	△
2836	0B14h	2	R	N/A	-	-	-	△	△	△	△	△

(9) Harmonics current content rate monitor register

Register address		Number of byte	R/W	Register name		RANGE	Unit	Support				
								EMU4-BD1-MB		EMU4-HD1-MB		
Decimal	Hex							1P2W	1P3W 3P3W	1P2W	1P3W 3P3W	3P4W
3072	0C00h	2	R	THD I1	Total	0 to 1000	×0.1%	△	△	○	○	○
3073	0C01h	2	R	THD I2	Total	0 to 1000	×0.1%	△	△	△	△	○
3074	0C02h	2	R	THD I3	Total	0 to 1000	×0.1%	△	△	△	○	○
3075	0C03h	2	R	THD IN	Total	0 to 1000	×0.1%	△	△	△	△	○
3076	0C04h	2	R	Harmonics ratio I1	3rd	0 to 1000	×0.1%	△	△	○	○	○
3077	0C05h	2	R	Harmonics ratio I2	3rd	0 to 1000	×0.1%	△	△	△	△	○
3078	0C06h	2	R	Harmonics ratio I3	3rd	0 to 1000	×0.1%	△	△	△	○	○
3079	0C07h	2	R	Harmonics ratio IN	3rd	0 to 1000	×0.1%	△	△	△	△	○
3080	0C08h	2	R	Harmonics ratio I1	5th	0 to 1000	×0.1%	△	△	○	○	○
3081	0C09h	2	R	Harmonics ratio I2	5th	0 to 1000	×0.1%	△	△	△	△	○
3082	0C0Ah	2	R	Harmonics ratio I3	5th	0 to 1000	×0.1%	△	△	△	○	○
3083	0C0Bh	2	R	Harmonics ratio IN	5th	0 to 1000	×0.1%	△	△	△	△	○
3084	0C0Ch	2	R	Harmonics ratio I1	7th	0 to 1000	×0.1%	△	△	○	○	○
3085	0C0Dh	2	R	Harmonics ratio I2	7th	0 to 1000	×0.1%	△	△	△	△	○
3086	0C0Eh	2	R	Harmonics ratio I3	7th	0 to 1000	×0.1%	△	△	△	○	○
3087	0C0Fh	2	R	Harmonics ratio IN	7th	0 to 1000	×0.1%	△	△	△	△	○
3088	0C10h	2	R	Harmonics ratio I1	9th	0 to 1000	×0.1%	△	△	○	○	○
3089	0C11h	2	R	Harmonics ratio I2	9th	0 to 1000	×0.1%	△	△	△	△	○
3090	0C12h	2	R	Harmonics ratio I3	9th	0 to 1000	×0.1%	△	△	△	○	○
3091	0C13h	2	R	Harmonics ratio IN	9th	0 to 1000	×0.1%	△	△	△	△	○
3092	0C14h	2	R	Harmonics ratio I1	11th	0 to 1000	×0.1%	△	△	○	○	○
3093	0C15h	2	R	Harmonics ratio I2	11th	0 to 1000	×0.1%	△	△	△	△	○
3094	0C16h	2	R	Harmonics ratio I3	11th	0 to 1000	×0.1%	△	△	△	○	○
3095	0C17h	2	R	Harmonics ratio IN	11th	0 to 1000	×0.1%	△	△	△	△	○
3096	0C18h	2	R	Harmonics ratio I1	13th	0 to 1000	×0.1%	△	△	○	○	○
3097	0C19h	2	R	Harmonics ratio I2	13th	0 to 1000	×0.1%	△	△	△	△	○
3098	0C1Ah	2	R	Harmonics ratio I3	13th	0 to 1000	×0.1%	△	△	△	○	○
3099	0C1Bh	2	R	Harmonics ratio IN	13th	0 to 1000	×0.1%	△	△	△	△	○

7.1.2 EcoMonitorLight（EMU4-BD1A-MB/ EMU4-HD1A-MB）

(1) Setting register

Register address		Number of byte	R/W	Register name	RANGE	Unit	Support						
							EMU4-BD1A-MB			EMU4-HD1A-MB			
Decimal	Hex						1P2W	1P3W	3P3W	1P2W	1P3W	3P3W	3P4W
512	0200h	2	R/W	Phase wire system	1：1P2W, 2：1P3W, 3：3P3W_2CT, 4：3P4W, 6：3P3W_3CT	-	○	○	○	○	○	○	○
513	0201h	4	R/W	Primary voltage (L-L: line voltage)	1 to 110000	V	○	○	○	○	○	○	○
515	0203h	4	R/W	Primary voltage (L-N: phase voltage)	10 to 1100000	×0.1V	△	△	△	△	△	△	○
517	0205h	4	R/W	Secondary voltage	10 to 2200	×0.1V	○	○	○	○	○	○	○
519	0207h	4	R/W	Primary current	50 to 300000	×0.1A	○	○	○	○	○	○	○
521	0209h	2	R/W	Electric power demand time	0 to 1800	s	○	○	○	○	○	○	○
522	020Ah	2	R/W	Current demand time	0 to 1800	s	○	○	○	○	○	○	○
523	020Bh	2	R/W	16 bits Set/Reset register	Refer to 7.2.7 16bit set / reset register	-	○	○	○	○	○	○	○
524	020Ch	2	R	16 bits monitor	Refer to 7.2.8 16bit monitor	-	○	○	○	○	○	○	○
525	020Dh	2	R/W	N/A	-	-	△	△	△	△	△	△	△
526	020Eh	2	R/W	N/A	-	-	△	△	△	△	△	△	△
527	020Fh	2	R/W	N/A	-	-	△	△	△	△	△	△	△
528	0210h	2	R/W	N/A	-	-	△	△	△	△	△	△	△
529	0211h	2	R/W	N/A	-	-	△	△	△	△	△	△	△
530	0212h	2	R/W	N/A	-	-	△	△	△	△	△	△	△
531	0213h	2	R/W	5A inpit change (Sensor type)	0：Direct, 2：5A	-	○	○	○	○	○	○	○
587	024Bh	2	R/W	External input method	0：non 1：pulse input 2：monitoring status	-	△	△	△	○	○	○	○
588	024Ch	2	R/W	Reset method of contact input	1：Auto,2：Hold	-	△	△	△	○	○	○	○
589	024Dh	2	R/W	External output method	0：non 1：pulse output 2:alarm output 3：contact output	-	△	△	△	○	○	○	○
590	024Eh	2	R/W	External output target circuit	0：1 side, 1：3 side	-	△	△	△	○	△	△	△
591	024Fh	2	R/W	Pulse output unit	Refer to 7.2.14 Unit of pulse output	-	△	△	△	○	○	○	○
592	0250h	2	R	N/A	-	-	△	△	△	△	△	△	△
593	0251h	2	R	Contasct input status	-	-	△	△	△	○	○	○	○
594	0252h	2	R	16bit monitor2	Refer to 7.2.9 16bit monitor2	-	○	○	○	○	○	○	○
720	02D0h	4	R/W	N/A	-	-	△	△	△	△	△	△	△
722	02D2h	2	R/W	N/A	-	-	△	△	△	△	△	△	△
723	02D3h	2	R/W	N/A	-	-	△	△	△	△	△	△	△
724	02D4h	2	R/W	N/A	-	-	△	△	△	△	△	△	△
725	02D5h	4	R/W	Primary current (CH2)	50 to 300000	×0.1A	○	△	△	○	△	△	△
727	02D7h	2	R/W	N/A	-	-	△	△	△	△	△	△	△
728	02D8h	2	R/W	Electric power demand time (CH2)	0 to 1800	s	○	△	△	○	△	△	△
729	02D9h	2	R/W	Current demand time (CH2)	0 to 1800	s	○	△	△	○	△	△	△
730	02DAh	2	R	N/A	-	-	△	△	△	△	△	△	△
731	02DBh	2	R	N/A	-	-	△	△	△	△	△	△	△
732	02DCh	2	R/W	N/A	-	-	△	△	△	△	△	△	△
733	02DDh	2	R/W	Measuring method of operating time(CH2)	1: By current 2: By contact	-	△	△	△	○	△	△	△
734	02DEh	2	R/W	N/A	-	-	△	△	△	△	△	△	△
735	02DFh	2	R	N/A	-	-	△	△	△	△	△	△	△
736	02E0h	2	R/W	N/A	-	-	△	△	△	△	△	△	△
737	02E1h	2	R/W	Convert unit of pulse	Refer to 7.2.15 Unit of pulse converted and unit of electric energy converted	-	△	△	△	○	○	○	○

Register address		Number of byte	R/W	Register name	RANGE	Unit	Support						
							EMU4-BD1A-MB			EMU4-HD1A-MB			
Decimal	Hex						1P2W	1P3W	3P3W	1P2W	1P3W	3P3W	3P4W
738	02E2h	4	R/W	Convert rate of pulse	1 to 10000000	×0.001	△	△	△	○	○	○	○
740	02E4h	2	R/W	Electric energy converted unit	Refer to 7.2.15 Unit of pulse converted and unit of electric energy converted	-	△	△	△	○	○	○	○
741	02E5h	4	R/W	Electric energy converted rate	1 to 10000000	×0.001	△	△	△	○	○	○	○
743	02E7h	2	R/W	N/A	-	-	△	△	△	△	△	△	△
744	02E8h	4	R/W	N/A	-	-	△	△	△	△	△	△	△
746	02EAh	2	R/W	Electric energy converted unit(CH2)	Refer to 7.2.15 Unit of pulse converted and unit of electric energy converted	-	△	△	△	○	△	△	△
747	02EBh	4	R/W	Electric energy converted rate(CH2)	1 to 10000000	×0.001	△	△	△	○	△	△	△
749	02EDh	2	R/W	2 circuit measuring setteing	0：OFF, 1：ON	-	○	△	△	○	△	△	△
753	02F1h	2	R/W	Measuring method of operating time	1: By current 2: By contact	-	△	△	△	○	○	○	○
754	02F2h	2	R	Multiplying factor of current	-127 to 127	-	○	○	○	○	○	○	○
755	02F3h	2	R	Multiplying factor of voltage	-127 to 127	-	○	○	○	○	○	○	○
756	02F4h	2	R	Multiplying factor of electric power	-127 to 127	-	○	○	○	○	○	○	○
757	02F5h	2	R	Multiplying factor of electric energy	-127 to 127	-	○	○	○	○	○	○	○
758	02F6h	2	R	Multiplying factor of power factor	-127 to 127	-	○	○	○	○	○	○	○
759	02F7h	2	R	Multiplying factor of frequency	-127 to 127	-	○	○	○	○	○	○	○
760	02F8h	2	R	Multiplying factor of contact rate of harmonic current	-127 to 127	-	△	△	○	○	○	○	○
761	02F9h	2	R	Multiplying factor of contact rate of harmonic voltage	-127 to 127	-	△	△	○	○	○	○	○
762	02FAh	2	R	Multiplying factor of detail electric energy	-127 to 127	-	○	○	○	○	○	○	○
763	02FBh	2	R	Model code	Refer to 7.2.13 Model code data	-	○	○	○	○	○	○	○

(2) Instantaneous value monitor register

Register address		Number of byte	R/W	Register name	RANGE	Unit	Support						
							EMU4-BD1A-MB			EMU4-HD1A-MB			
Decimal	Hex						1P2W	1P3W	3P3W	1P2W	1P3W	3P3W	3P4W
768	0300h	2	R	Phase 1 current	0 to 65535	A	○	○	○	○	○	○	○
769	0301h	2	R	Phase 2 current	0 to 65535	A	△	○	○	△	○	○	○
770	0302h	2	R	Phase 3 current	0 to 65535	A	○	○	○	○	○	○	○
771	0303h	2	R	Neutral current	0 to 65535	A	△	△	△	△	△	△	○
772	0304h	2	R	Average value current	0 to 65535	A	○	○	○	○	○	○	○
773	0305h	2	R	Phase 1 current demand	0 to 65535	A	○	○	○	○	○	○	○
774	0306h	2	R	Phase 2 current demand	0 to 65535	A	△	○	○	△	○	○	○
775	0307h	2	R	Phase 3 current demand	0 to 65535	A	○	○	○	○	○	○	○
776	0308h	2	R	Neutral current demand	0 to 65535	A	△	△	△	△	△	△	○
777	0309h	2	R	N/A	-	-	△	△	△	△	△	△	△
778	030Ah	2	R	Voltage V12	0 to 65535	V	○	○	○	○	○	○	○
779	030Bh	2	R	Voltage V23/(CH2)	0 to 65535	V	○	○	○	○	○	○	○
780	030Ch	2	R	Voltage V31	0 to 65535	V	△	○	○	△	○	○	○
781	030Dh	2	R	Average value voltage(L-L)	0 to 65535	V	○	○	○	○	○	○	○
782	030Eh	2	R	Voltage V1N	0 to 65535	V	△	△	△	△	△	△	○
783	030Fh	2	R	Voltage V2N/(CH2)	0 to 65535	V	△	△	△	△	△	△	○
784	0310h	2	R	Voltage V3N	0 to 65535	V	△	△	△	△	△	△	○
785	0311h	2	R	N/A	-	-	△	△	△	△	△	△	△
786	0312h	2	R	Phase 1 power factor(CH1)	-1 to +1000 to 0	×0.1%	○	△	△	○	△	△	△
787	0313h	2	R	N/A	-	-	△	△	△	△	△	△	△
788	0314h	2	R	Phase 3 power factor (CH2) *1,*2	-1 to +1000 to 0	×0.1%	○	△	△	○	△	△	△
789	0315h	2	R	ΣPower factor *1	-1 to +1000 to 0	×0.1%	○	○	○	○	○	○	○
790	0316h	2	R	Frequency	445 to 999	×0.1Hz	○	○	○	○	○	○	○
791	0317h	2	R	Phase 1 active power(CH1) *1, *2	-32767 to 32767	kW	○	△	△	○	△	△	△
792	0318h	2	R	N/A	-	-	△	△	△	△	△	△	△
793	0319h	2	R	Phase 3 active power (CH2) *1, *2	-32767 to 32767	kW	○	△	△	○	△	△	△
794	031Ah	2	R	ΣActive Power *1	-32767 to 32767	kW	○	○	○	○	○	○	○
795	031Bh	2	R	Phase 1 active power demad(CH1) *1, *2	-32767 to 32767	kW	○	△	△	○	△	△	△
796	031Ch	2	R	N/A	-	-	△	△	△	△	△	△	△
797	031Dh	2	R	Phase 1 active power demad(CH2) *1, *2	-32767 to 32767	kW	○	△	△	○	△	△	△
798	031Eh	2	R	ΣActive power demand	-32767 to 32767	kW	○	○	○	○	○	○	○
799	031Fh	2	R	Phase 1 reactive power(CH1) *1, *2	-32767 to 32767	kvar	○	△	△	○	△	△	△
800	0320h	2	R	N/A	-	-	△	△	△	△	△	△	△
801	0321h	2	R	Phase 3 reactive power (CH2) *1, *2	-32767 to 32767	kvar	○	△	△	○	△	△	△
802	0322h	2	R	ΣReactive power *1	-32767 to 32767	kvar	○	○	○	○	○	○	○
803	0323h	2	R	N/A	-	-	△	△	△	△	△	△	△
804	0324h	2	R	N/A	-	-	△	△	△	△	△	△	△
805	0325h	2	R	N/A	-	-	△	△	△	△	△	△	△
806	0326h	2	R	ΣApparent power	-32767 to 32767	kVA	△	△	△	△	△	△	○

*1 When phase wire system is 1P2W (2 circuit measuring setteing), the measurement values are as follows.
Total･･･measurement value of the first circuit
(CH1)･･･measurement value of the first circuit
(CH2)･･･measurement value of the second circuit

*2 Applied only when measuring at 1P2W. When it's not 1P2W, it replies 0.

(3) Max value monitor register

Register address		Number of byte	R/W	Register name	RANGE	Unit	Support						
							EMU4-BD1A-MB			EMU4-HD1A-MB			
Decimal	Hex						1P2W	1P3W	3P3W	1P2W	1P3W	3P3W	3P4W
812	032Ch	2	R	N/A	-	-	△	△	△	△	△	△	△
813	032Dh	2	R	N/A	-	-	△	△	△	△	△	△	△
814	032Eh	2	R	N/A	-	-	△	△	△	△	△	△	△
815	032Fh	2	R	N/A	-	-	△	△	△	△	△	△	△
816	0330h	2	R	N/A	-	-	△	△	△	△	△	△	△
817	0331h	2	R	Phase 1 current demand Max (CH1)	0 to 65535	A	○	△	△	○	△	△	△
818	0332h	2	R	N/A	-	-	△	△	△	△	△	△	△
819	0333h	2	R	Phase 3 current demand Max (CH2)	0 to 65535	A	○	△	△	○	△	△	△
820	0334h	2	R	N/A	-	-	△	△	△	△	△	△	△
821	0335h	2	R	N/A	-	-	△	△	△	△	△	△	△
822	0336h	2	R	Current demand max	0 to 65535	A	○	○	○	○	○	○	○
823	0337h	2	R	Voltage V12 max	0 to 65535	V	○	△	△	○	△	△	△
824	0338h	2	R	Voltage V23 max/(CH2)	0 to 65535	V	○	△	△	○	△	△	△
825	0339h	2	R	N/A	-	-	△	△	△	△	△	△	△
826	033Ah	2	R	N/A	-	-	△	△	△	△	△	△	△
827	033Bh	2	R	Voltage (L-L) max	0 to 65535	V	○	○	○	○	○	○	○
828	033Ch	2	R	N/A	-	-	△	△	△	△	△	△	△
829	033Dh	2	R	N/A	-	-	△	△	△	△	△	△	△
830	033Eh	2	R	N/A	-	-	△	△	△	△	△	△	△
831	033Fh	2	R	N/A	-	-	△	△	△	△	△	△	△
832	0340h	2	R	Voltage (L-N) max	0 to 65535	V	△	△	△	△	△	△	○
833	0341h	2	R	Phase 1 power factor Max (CH1) *1, *2	-1 to +1000 to 0	×0.1%	○	△	△	○	△	△	△
834	0342h	2	R	N/A	-	-	△	△	△	△	△	△	△
835	0343h	2	R	Phase 3 power factor Max (CH2) *1, *2	-1 to +1000 to 0	×0.1%	○	△	△	○	△	△	△
836	0344h	2	R	Σ Power factor max *1	-1 to +1000 to 0	×0.1%	○	○	○	○	○	○	○
837	0345h	2	R	N/A	-	-	△	△	△	△	△	△	△
838	0346h	2	R	N/A	-	-	△	△	△	△	△	△	△
839	0347h	2	R	N/A	-	-	△	△	△	△	△	△	△
840	0348h	2	R	N/A	-	-	△	△	△	△	△	△	△
841	0349h	2	R	N/A	-	-	△	△	△	△	△	△	△
842	034Ah	2	R	Phase 1 active power demand max(CH1)*1, *2	-32767 to 32767	kW	○	△	△	○	△	△	△
843	034Bh	2	R	N/A	-	-	△	△	△	△	△	△	△
844	034Ch	2	R	Phase 3 active power demand max(CH2)*1, *2	-32767 to 32767	kW	○	△	△	○	△	△	△
845	034Dh	2	R	Σ Active power demand max *1	-32767 to 32767	kW	○	○	○	○	○	○	○
846	034Eh	2	R	N/A	-	-	△	△	△	△	△	△	△
847	034Fh	2	R	N/A	-	-	△	△	△	△	△	△	△
848	0350h	2	R	N/A	-	-	△	△	△	△	△	△	△
849	0351h	2	R	N/A	-	-	△	△	△	△	△	△	△
850	0352h	2	R	N/A	-	-	△	△	△	△	△	△	△
851	0353h	2	R	N/A	-	-	△	△	△	△	△	△	△
852	0354h	2	R	N/A	-	-	△	△	△	△	△	△	△
853	0355h	2	R	N/A	-	-	△	△	△	△	△	△	△

*1 When phase wire system is 1P2W (2 circuit measuring setteing), the measurement values are as follows.
Total･･･measurement value of the first circuit
(CH1)･･･measurement value of the first circuit
(CH2)･･･measurement value of the second circuit

*2 Applied only when measuring at 1P2W. When it's not 1P2W, it replies 0.

(4) Min value monitor register

Register address		Number of byte	R/W	Register name	RANGE	Unit	Support						
							EMU4-BD1A-MB			EMU4-HD1A-MB			
Decimal	Hex						1P2W	1P3W	3P3W	1P2W	1P3W	3P3W	3P4W
858	035Ah	2	R	N/A	-	-	△	△	△	△	△	△	△
859	035Bh	2	R	N/A	-	-	△	△	△	△	△	△	△
860	035Ch	2	R	N/A	-	-	△	△	△	△	△	△	△
861	035Dh	2	R	N/A	-	-	△	△	△	△	△	△	△
862	035Eh	2	R	N/A	-	-	△	△	△	△	△	△	△
863	035Fh	2	R	Phase 1 current demand min	0 to 65535	A	○	△	△	○	△	△	△
864	0360h	2	R	N/A	-	-	△	△	△	△	△	△	△
865	0361h	2	R	Phase 3 current demand /(CH2) min	0 to 65535	A	○	△	△	○	△	△	△
866	0362h	2	R	N/A	-	-	△	△	△	△	△	△	△
867	0363h	2	R	N/A	-	-	△	△	△	△	△	△	△
868	0364h	2	R	Voltage V12 min	0 to 65535	V	○	△	△	○	△	△	△
869	0365h	2	R	Voltage V23 /(CH2) min	0 to 65535	V	○	△	△	○	△	△	△
870	0366h	2	R	N/A	-	-	△	△	△	△	△	△	△
871	0367h	2	R	N/A	-	-	△	△	△	△	△	△	△
872	0368h	2	R	N/A	-	-	△	△	△	△	△	△	△
873	0369h	2	R	N/A	-	-	△	△	△	△	△	△	△
874	036Ah	2	R	N/A	-	-	△	△	△	△	△	△	△
875	036Bh	2	R	N/A	-	-	△	△	△	△	△	△	△
876	036Ch	2	R	Phase 1 power factor(CH1) min *1, *2	-1 to +1000 to 0	×0.1%	○	△	△	○	△	△	△
877	036Dh	2	R	N/A	-	-	△	△	△	△	△	△	△
878	036Eh	2	R	Phase 3 power factor(CH2) min *1, *2	-1 to +1000 to 0	×0.1%	○	△	△	○	△	△	△
879	036Fh	2	R	ΣPower factor min *1	-1 to +1000 to 0	×0.1%	○	○	○	○	○	○	○
880	0370h	2	R	N/A	-	-	△	△	△	△	△	△	△
881	0371h	2	R	N/A	-	-	△	△	△	△	△	△	△
882	0372h	2	R	N/A	-	-	△	△	△	△	△	△	△
883	0373h	2	R	N/A	-	-	△	△	△	△	△	△	△
884	0374h	2	R	N/A	-	-	△	△	△	△	△	△	△
885	0375h	2	R	Electric power demand(CH1) min *1, *2	-32767 to 32767	kW	○	△	△	○	△	△	△
886	0376h	2	R	N/A	-	-	△	△	△	△	△	△	△
887	0377h	2	R	Electric power demand min (CH2) *1, *2	-32767 to 32767	kW	○	△	△	○	△	△	△
888	0378h	2	R	ΣElectric power demand min *1	-32767 to 32767	kW	○	○	○	○	○	○	○
889	0379h	2	R	N/A	-	-	△	△	△	△	△	△	△
890	037Ah	2	R	N/A	-	-	△	△	△	△	△	△	△
891	037Bh	2	R	N/A	-	-	△	△	△	△	△	△	△
892	037Ch	2	R	N/A	-	-	△	△	△	△	△	△	△
893	037Dh	2	R	N/A	-	-	△	△	△	△	△	△	△
894	037Eh	2	R	N/A	-	-	△	△	△	△	△	△	△
895	037Fh	2	R	N/A	-	-	△	△	△	△	△	△	△
896	0380h	2	R	N/A	-	-	△	△	△	△	△	△	△
925	039Dh	4	R	Current unbalance rate min	0 to 99999	×0.01%	△	○	○	△	○	○	○
927	039Fh	4	R	Voltage unbalance rate min	0 to 99999	×0.01%	△	○	○	△	○	○	○
929	03A1h	2	R	Minimum phase current demand	0 to 65535	A	○	○	○	○	○	○	○
930	03A2h	2	R	Minimum voltage(L-L)	0 to 65535	V	○	○	○	○	○	○	△
931	03A3h	2	R	Minimum voltage(L-N)	0 to 65535	V	△	△	△	△	△	△	○

*1 When phase wire system is 1P2W (2 circuit measuring setteing), the measurement values are as follows.
Total･･･measurement value of the first circuit
(CH1)･･･measurement value of the first circuit
(CH2)･･･measurement value of the second circuit

*2 Applied only when measuring at 1P2W. When it's not 1P2W, it replies 0.

(5) Setup register2

Register address		Number of byte	R/W	Register name	RANGE	Unit	Support						
							EMU4-BD1A-MB			EMU4-HD1A-MB			
Decimal	Hex						1P2W	1P3W	3P3W	1P2W	1P3W	3P3W	3P4W
1024	0400h	2	R/W	MODBUS address	01h ～ FFh	−	○	○	○	○	○	○	○
1025	0401h	2	R/W	MODBUS baudrate	Refer to 7.2.16 (1) Setting for MODBUS baudrate	bps	○	○	○	○	○	○	○
1026	0402h	2	R/W	MODBUS parity	Refer to 7.2.16 (2) Setting for MODBUS parity	−	○	○	○	○	○	○	○
1027	0403h	2	R/W	MODBUS stop bit	00h：1, 01h：2	−	○	○	○	○	○	○	○
1028	0404h	2	R/W	LoggingID	01h ～ FFh	−	○	○	○	○	○	○	○
1029	0405h	2	R/W	Logging data	00h：no 01h：yes	−	○	○	○	○	○	○	○
1030	0406h	2	R/W	Logging unit time(year・month)*1	00h to 99h ＋ 01h to 12h	Year+ Month	○	○	○	○	○	○	○
1031	0407h	2	R/W	Logging unit time(day・hour)*1	01h to 31h ＋ 01h to 24h	Day+ Hour	○	○	○	○	○	○	○
1032	0408h	2	R/W	Logging unit time(minute・second)*1	01h to 60h ＋ 01h to 60h	Minute +Second	○	○	○	○	○	○	○
1033	0409h	2	R/W	N/A	-	−	△	△	△	△	△	△	△
1034	040Ah	2	R/W	Upper and lower limit alarm extence	00h：OFF 01h：ON	−	○	○	○	○	○	○	○
1035	040Bh	2	R/W	Upper and lower limit alarm mehod	Refer to 7.2.17 Setting for items of upper / lower alarm	−	○	○	○	○	○	○	○
1036	040Ch	4	R/W	Setting for items of upper/lower value	Refer to 7.2.18 Setting for value of upper / lower alarm	−	○	○	○	○	○	○	○
1038	040Eh	2	R/W	Alarm delay time	Refer to 7.2.19 Setting for alarm mask	sec	○	○	○	○	○	○	○
1039	040Fh	2	R/W	Alarm reset method	01h：Auto 02h：Hold	-	○	○	○	○	○	○	○
1040	0410h	2	R/W	N/A	-	-	△	△	△	△	△	△	△
1041	0411h	2	R/W	N/A	-	-	△	△	△	△	△	△	△
1042	0412h	4	R/W	N/A	-	-	△	△	△	△	△	△	△
1044	0414h	2	R/W	N/A	-	-	△	△	△	△	△	△	△
1045	0415h	2	R/W	N/A	-	-	△	△	△	△	△	△	△
1046	0416h	2	R/W	Upper and lower limit alarm extence(3side) (CH2)	00h：OFF 01h：ON	-	○	△	△	○	△	△	△
1047	0417h	2	R/W	Upper and lower limit alarm method(3side) (CH2)	Refer to 7.2.17 Setting for items of upper / lower alarm	-	○	△	△	○	△	△	△
1048	0418h	4	R/W	Upper and lower limit alarm value (CH2)	Refer to 7.2.18 Setting for value of upper / lower alarm	-	○	△	△	○	△	△	△
1050	041Ah	2	R/W	Alarm delay time(3side)(CH2)	Refer to 7.2.19 Setting for alarm mask	sec	○	△	△	○	△	△	△
1051	041Bh	2	R/W	Alarm reset method(3side)(CH2)	01h：Auto 02h：Hold	-	○	△	△	○	△	△	△
1052	041Ch	2	R/W	Simple measuring setup	00h：no 01h：yes	-	○	○	○	○	○	○	○
1053	041Dh	2	R/W	Power factor setup in simple measuring	-1 to +1000 to 0	×0.1%	○	○	○	○	○	○	○
1054	041Eh	2	R/W	N/A	-	-	△	△	△	△	△	△	△
1055	041Fh	2	R/W	Power factor setup in simple measuring(3side) (CH2)	-1 to +1000 to 0	×0.1%	○	△	△	○	△	△	△
1062	0426h	2	R/W	VT use or no-use *2	00h：no, 01h：yes	−	○	△	○	○	△	○	○
1083	043Bh	2	R	Option unit type	Refer to 7.2.23 Setting for option unit	−	○	○	○	○	○	○	○
1084	043Ch	2	R	Standard waveform 1 *4	0 to 65535	A	△	△	△	○	○	○	○
1085	043Dh	2	R	Standard waveform 2 *4	0 to 65535	A	△	△	△	○	○	○	○
1086	043Eh	2	R	Standard waveform 3 *4	0 to 65535	A	△	△	△	○	○	○	○
1087	043Fh	2	R	Standard waveform 4 *4	0 to 65535	A	△	△	△	○	○	○	○
1088	0440h	2	R	Standard waveform 5 *4	0 to 65535	A	△	△	△	○	○	○	○
1089	0441h	2	R	Standard waveform 6 *4	0 to 65535	A	△	△	△	○	○	○	○
1090	0442h	2	R	Standard waveform 7 *4	0 to 65535	A	△	△	△	○	○	○	○
1091	0443h	2	R	Standard waveform 8 *4	0 to 65535	A	△	△	△	○	○	○	○
1092	0444h	2	R	Standard waveform 9 *4	0 to 65535	A	△	△	△	○	○	○	○
1093	0445h	2	R	Standard waveform 10 *4	0 to 65535	A	△	△	△	○	○	○	○

Register address		Number of byte	R/W	Register name	RANGE	Unit	Support						
							EMU4-BD1A-MB			EMU4-HD1A-MB			
Decimal	Hex						1P2W	1P3W	3P3W	1P2W	1P3W	3P3W	3P4W
1094	0446h	2	R	Standard waveform 11 *4	0 to 65535	A	△	△	△	○	○	○	○
1095	0447h	2	R	Standard waveform 12 *4	0 to 65535	A	△	△	△	○	○	○	○
1096	0448h	2	R	Standard waveform 13 *4	0 to 65535	A	△	△	△	○	○	○	○
1097	0449h	2	R	Standard waveform 14 *4	0 to 65535	A	△	△	△	○	○	○	○
1098	044Ah	2	R	Standard waveform 15 *4	0 to 65535	A	△	△	△	○	○	○	○
1099	044Bh	2	R	Standard waveform 16 *4	0 to 65535	A	△	△	△	○	○	○	○
1100	044Ch	2	R	Standard waveform 17 *4	0 to 65535	A	△	△	△	○	○	○	○
1101	044Dh	2	R	Standard waveform 18 *4	0 to 65535	A	△	△	△	○	○	○	○
1102	044Eh	2	R	Standard waveform 19 *4	0 to 65535	A	△	△	△	○	○	○	○
1103	044Fh	2	R	Standard waveform 20 *4	0 to 65535	A	△	△	△	○	○	○	○
1111	0457h	2	R	Standard deviation 1 *4	0 to 65535	–	△	△	△	○	○	○	○
1112	0458h	2	R	Standard deviation 2 *4	0 to 65535	–	△	△	△	○	○	○	○
1113	0459h	2	R	Standard deviation 3 *4	0 to 65535	–	△	△	△	○	○	○	○
1114	045Ah	2	R	Standard deviation 4 *4	0 to 65535	–	△	△	△	○	○	○	○
1115	045Bh	2	R	Standard deviation 5 *4	0 to 65535	–	△	△	△	○	○	○	○
1116	045Ch	2	R	Standard deviation 6 *4	0 to 65535	–	△	△	△	○	○	○	○
1117	045Dh	2	R	Standard deviation 7 *4	0 to 65535	–	△	△	△	○	○	○	○
1118	045Eh	2	R	Standard deviation 8 *4	0 to 65535	–	△	△	△	○	○	○	○
1119	045Fh	2	R	Standard deviation 9 *4	0 to 65535	–	△	△	△	○	○	○	○
1120	0460h	2	R	Standard deviation 10 *4	0 to 65535	–	△	△	△	○	○	○	○
1121	0461h	2	R	Standard deviation 11 *4	0 to 65535	–	△	△	△	○	○	○	○
1122	0462h	2	R	Standard deviation 12 *4	0 to 65535	–	△	△	△	○	○	○	○
1123	0463h	2	R	Standard deviation 13 *4	0 to 65535	–	△	△	△	○	○	○	○
1124	0464h	2	R	Standard deviation 14 *4	0 to 65535	–	△	△	△	○	○	○	○
1125	0465h	2	R	Standard deviation 15 *4	0 to 65535	–	△	△	△	○	○	○	○
1126	0466h	2	R	Standard deviation 16 *4	0 to 65535	–	△	△	△	○	○	○	○
1127	0467h	2	R	Standard deviation 17 *4	0 to 65535	–	△	△	△	○	○	○	○
1128	0468h	2	R	Standard deviation 18 *4	0 to 65535	–	△	△	△	○	○	○	○
1129	0469h	2	R	Standard deviation 19 *4	0 to 65535	–	△	△	△	○	○	○	○
1130	046Ah	2	R	Standard deviation 20 *4	0 to 65535	–	△	△	△	○	○	○	○
1131	046Bh	2	R	Number of standard Waveform data *4	0, 10 to 20	Piece	△	△	△	○	○	○	○
1132	046Ch	2	R/W	Waveform band monitoring presence	00h：non-use 01h：use	–	△	△	△	○	○	○	○
1133	046Dh	2	R/W	Waveform band monitoring element *3	01h：1-phase current 02h：2-phase current 03h：3-phase current 04h：N-phase current	–	△	△	△	○	○	○	○
1134	046Eh	2	R/W	Sampling cycle	01h：250ms, 02h：500ms 03h：1250ms, 04h：2500ms 05h：5000ms	–	△	△	△	○	○	○	○
1135	046Fh	2	R/W	Band width factor *4	1 to 10	–	△	△	△	○	○	○	○
1136	0470h	2	R/W	Standard deviation lower limit *4	1 to 100	%	△	△	△	○	○	○	○
1137	0471h	2	R/W	Waveform band monitoring value	0 to 100 (set in increments of 5%)	%	△	△	△	○	○	○	○
1138	0472h	2	R/W	Waveform band monitoring alarm reset method	01：Auto-reset 02h：Hold	–	△	△	△	○	○	○	○
1179	049Bh	2	R/W	Operating time unit	01h：hour, 02h：min 03h：sec	–	○	○	○	○	○	○	○
1180	049Ch	2	R/W	N/A	-	–	△	△	△	△	△	△	△
1181	049Dh	2	R/W	Operating time unit(CH2)	01h：hour, 02h：min 03h：sec	–	○	△	△	○	△	△	△
1182	049Eh	2	R/W	Multiplication factor of Alarm cumulative time	00h：x1, 01h：x10 02h：x100, 03h：x1000	–	○	○	○	○	○	○	○
1183	049Fh	2	R/W	Multiplication factor of Alarm cumulative time(CH2)	00h：x1, 01h：x10 02h：x100, 03h：x1000		○	△	△	○	△	△	△

*1 Changing the logging unit time (year/month/date/minute/second) erases the logging data held by the logging unit(Model:EMU4-LM).
When changing the logging unit time (year, month, time, minute, and second), make sure that the logging data is stored on the SD card in advance.
*2 When 1P3W is set, "With VT" cannot be set.
*3 The supported values differ depending on the phase and wire system setting.
*4 Standard waveform, Standard deviation, Standare Waveform data are the setting values used for waveform band monitoring.
The equation is shown below.(For details, please refer to the Operation Manual.)
Band(Upper,Lower)=Standard waveform N ± (Band width factor × Standard deviation N) (N=1～Number of standard waveform data)
However,for「Standard deviation N<(primary current×Standard deviation Lower)」,Calculate it as「Standard deviation N=(primary current×Standard deviation Lower)」.

(6) Electric energy, Reactive energy monitor register

Register address		Number of byte	R/W	Register name		RANGE	Unit	Support						
								EMU4-BD1A-MB			EMU4-HD1A-MB			
Decimal	Hex							1P2W	1P3W	3P3W	1P2W	1P3W	3P3W	3P4W
1280	0500h	2	R	Electric energy (Lower) (*1)	Incoming	Less than 1000	kWh	○	○	○	○	○	○	○
1281	0501h	2	R	Electric energy (upper) (*1)		1000or more	kWh	○	○	○	○	○	○	○
1282	0502h	2	R	Electric energy (Lower) (*1)	Transmission	Less than 1000	kWh	○	○	○	○	○	○	○
1283	0503h	2	R	Electric energy (upper) (*1)		1000or more	kWh	○	○	○	○	○	○	○
1284	0504h	2	R	Reactive energy (Lower) (*1)	Incoming lag	Less than 1000	kvarh	○	○	○	○	○	○	○
1285	0505h	2	R	Reactive energy (Lower) (*1)		1000or more	kvarh	○	○	○	○	○	○	○
1286	0506h	2	R	N/A		-	-	△	△	△	△	△	△	△
1287	0507h	2	R	N/A		-	-	△	△	△	△	△	△	△
1288	0508h	2	R	N/A		-	-	△	△	△	△	△	△	△
1289	0509h	2	R	N/A		-	-	△	△	△	△	△	△	△
1290	050Ah	2	R	N/A		-	-	△	△	△	△	△	△	△
1291	050Bh	2	R	N/A		-	-	△	△	△	△	△	△	△
1292	050Ch	2	R	Detailed electric energy (Lower) (*1)	Incoming	Less than 1000	kWh	○	○	○	○	○	○	○
1293	050Dh	2	R	Detailed electric energy (Lower) (*1)		1000or more	kWh	○	○	○	○	○	○	○
1294	050Eh	2	R	Detailed electric energy (Lower) (*1)	Transmission	Less than 1000	kWh	○	○	○	○	○	○	○
1295	050Fh	2	R	Detailed electric energy (Upper) (*1)		1000or more	kWh	○	○	○	○	○	○	○
1296	0510h	2	R	Detailed reactive energy (Lower) (*1)	Incoming lag	Less than 1000	kvarh	○	○	○	○	○	○	○
1297	0511h	2	R	Detailed reactive energy (Lower) (*1)		1000or more	kvarh	○	○	○	○	○	○	○
1298	0512h	2	R	N/A		-	-	△	△	△	△	△	△	△
1299	0513h	2	R	N/A		-	-	△	△	△	△	△	△	△
1300	0514h	2	R	N/A		-	-	△	△	△	△	△	△	△
1301	0515h	2	R	N/A		-	-	△	△	△	△	△	△	△
1302	0516h	2	R	N/A		-	-	△	△	△	△	△	△	△
1303	0517h	2	R	N/A		-	-	△	△	△	△	△	△	△
1304	0518h	4	R/W	Electric energy	Incoming	0 to 999999	kWh	○	○	○	○	○	○	○
1306	051Ah	4	R/W	Electric energy *1	Transmission	0 to 999999	kWh	○	○	○	○	○	○	○
1308	051Ch	4	R/W	Reactive energy		0 to 999999	kvarh	○	○	○	○	○	○	○
1310	051Eh	4	R	N/A		-	-	△	△	△	△	△	△	△
1312	0520h	4	R	N/A		-	-	△	△	△	△	△	△	△
1314	0522h	4	R	N/A		-	-	△	△	△	△	△	△	△
1316	0524h	4	R	Detailed electric energy	Incoming	0 to 999999	kWh	○	○	○	○	○	○	○
1318	0526h	4	R	Detailed electric energy	Transmission	0 to 999999	kWh	○	○	○	○	○	○	○
1320	0528h	4	R	Detailed reactive energy	Incoming lag	0 to 999999	kvarh	○	○	○	○	○	○	○
1374	055Eh	4	R/W	Periodic electric energy	Incoming	0 to 999999	kWh	△	△	△	○	○	○	○
1376	0560h	4	R/W	Pulse count		0 to 999999	pulse	△	△	△	○	○	○	○
1378	0562h	4	R/W	Operating time		0 to 999999	h	○	○	○	○	○	○	○
1444	05A4h	2	R	N/A		-	-	△	△	△	△	△	△	△
1445	05A5h	2	R	N/A		-	-	△	△	△	△	△	△	△
1446	05A6h	2	R	N/A		-	-	△	△	△	△	△	△	△
1447	05A7h	2	R	N/A		-	-	△	△	△	△	△	△	△
1448	05A8h	4	R	N/A		-	-	△	△	△	△	△	△	△
1450	05AAh	4	R	N/A		-	-	△	△	△	△	△	△	△
1452	05ACh	4	R	N/A		-	-	△	△	△	△	△	△	△
1454	05AEh	4	R	N/A		-	–	△	△	△	△	△	△	△
1456	05B0h	2	R	Electric energy(3side) /(CH2)(Lower) (*1)	Incoming	Less than 1000	kWh	○	△	△	○	△	△	△
1457	05B1h	2	R	Electric energy(3side) /(CH2) (Upper) (*1)		1000or more	kWh	○	△	△	○	△	△	△
1458	05B2h	2	R	Electric energy(3side) /(CH2)(Lower) (*1)	Transmission	Less than 1000	kWh	○	△	△	○	△	△	△
1459	05B3h	2	R	Electric energy(3side) /(CH2) (Upper) (*1)		1000or more	kWh	○	△	△	○	△	△	△

Register address		Number of byte	R/W	Register name		RANGE	Unit	Support						
								EMU4-BD1A-MB			EMU4-HD1A-MB			
Decimal	Hex							1P2W	1P3W	3P3W	1P2W	1P3W	3P3W	3P4W
1460	05B4h	4	R/W	Electric energy (3side) /(CH2)	Incoming	0 to 999999	kWh	○	△	△	○	△	△	△
1462	05B6h	4	R/W	Electric energy (3side) /(CH2)	Transmission	0 to 999999	kWh	○	△	△	○	△	△	△
1464	05B8h	4	R	Detailed electric energy (3side)/(CH2)	Incoming	0 to 999999	kWh	○	△	△	○	△	△	△
1466	05BAh	4	R	Detailed electric energy (3side)/(CH2)	Transmission	0 to 999999	kWh	○	△	△	○	△	△	△
1468	05BCh	4	R	N/A		-	−	△	△	△	△	△	△	△
1470	05BEh	4	R/W	Operating time(CH2)		0 to 999999	h	○	△	△	○	△	△	△
1472	05C0h	4	R	N/A		-	−	△	△	△	△	△	△	△
1474	05C2h	4	R/W	Periodic electric energy(3side)/(CH2)		0 to 999999	kWh	△	△	△	○	△	△	△
1476	05C4h	4	R/W	Electric energy convertion		0 to 999999	−	△	△	△	○	○	○	○
1478	05C6h	4	R	N/A		-	−	△	△	△	△	△	△	△
1480	05C8h	4	R/W	Electric energy convertion(3side)(CH2)		0 to 999999	−	△	△	△	○	△	△	△
1482	05CAh	4	R/W	Pulse convertion		0 to 999999	−	△	△	△	○	○	○	○
1490	05D2h	4	R/W	Alarm cumulative time		0 to 999999	*2	○	○	○	○	○	○	○
1492	05D4h	4	R/W	Alarm cumulative time (CH2)		0 to 999999		○	△	△	○	△	△	△

*1 Responds by separating the 6-digit power value into the upper 3 digits and the last 3 digits.(Refer to 7.1.1)

*2 Alarm cumulative time measures the time during which the upper and lower limit alarms are occurring.
Integration is performed every measurement period (250 ms), and 250 ms is shown at one count.

Note: When acquiring 4-byte data, it is necessary to swap the data in the upper register and the lower register.

(7) Harmonics phase voltage RMS monitor register

Register address		Number of byte	R/W	Register name		RANGE	Unit	Support				
								EMU4-BD1A-MB	EMU4-HD1A-MB			
Decimal	Hex								1P2W	1P3W	3P3W	3P4W
1792	0700h	2	R	Harmonics value V1N	Total	0 to 65535	V	△	△	△	△	○
1793	0701h	2	R	Harmonics value V2N	Total	0 to 65535	V	△	△	△	△	○
1794	0702h	2	R	Harmonics value V3N	Total	0 to 65535	V	△	△	△	△	○
1795	0703h	2	R	Harmonics value V1N	1st	0 to 65535	V	△	△	△	△	○
1796	0704h	2	R	Harmonics value V2N	1st	0 to 65535	V	△	△	△	△	○
1797	0705h	2	R	Harmonics value V3N	1st	0 to 65535	V	△	△	△	△	○
1798	0706h	2	R	Harmonics value V1N	3rd	0 to 65535	V	△	△	△	△	○
1799	0707h	2	R	Harmonics value V2N	3rd	0 to 65535	V	△	△	△	△	○
1800	0708h	2	R	Harmonics value V3N	3rd	0 to 65535	V	△	△	△	△	○
1801	0709h	2	R	Harmonics value V1N	5th	0 to 65535	V	△	△	△	△	○
1802	070Ah	2	R	Harmonics value V2N	5th	0 to 65535	V	△	△	△	△	○
1803	070Bh	2	R	Harmonics value V3N	5th	0 to 65535	V	△	△	△	△	○
1804	070Ch	2	R	Harmonics value V1N	7th	0 to 65535	V	△	△	△	△	○
1805	070Dh	2	R	Harmonics value V2N	7th	0 to 65535	V	△	△	△	△	○
1806	070Eh	2	R	Harmonics value V3N	7th	0 to 65535	V	△	△	△	△	○
1807	070Fh	2	R	Harmonics value V1N	9th	0 to 65535	V	△	△	△	△	○
1808	0710h	2	R	Harmonics value V2N	9th	0 to 65535	V	△	△	△	△	○
1809	0711h	2	R	Harmonics value V3N	9th	0 to 65535	V	△	△	△	△	○
1810	0712h	2	R	Harmonics value V1N	11th	0 to 65535	V	△	△	△	△	○
1811	0713h	2	R	Harmonics value V2N	11th	0 to 65535	V	△	△	△	△	○
1812	0714h	2	R	Harmonics value V3N	11th	0 to 65535	V	△	△	△	△	○
1813	0715h	2	R	Harmonics value V1N	13th	0 to 65535	V	△	△	△	△	○
1814	0716h	2	R	Harmonics value V2N	13th	0 to 65535	V	△	△	△	△	○
1815	0717h	2	R	Harmonics value V3N	13th	0 to 65535	V	△	△	△	△	○

(8) Harmonics line voltage RMS monitor register

Register address		Number of byte	R/W	Register name		RANGE	Unit	Support				
								EMU4-BD1A-MB	EMU4-HD1A-MB			
Decimal	Hex								1P2W	1P3W	3P3W	3P4W
2048	0800h	2	R	Harmonics value V12	Total	0 to 65535	V	△	○	○	○	△
2049	0801h	2	R	Harmonics value V23/(CH2)	Total	0 to 65535	V	△	○	○	○	△
2050	0802h	2	R	N/A		-	-	△	△	△	△	△
2051	0803h	2	R	Harmonics value V12	1st	0 to 65535	V	△	○	○	○	△
2052	0804h	2	R	Harmonics value V23/(CH2)	1st	0 to 65535	V	△	○	○	○	△
2053	0805h	2	R	N/A		-	-	△	△	△	△	△
2054	0806h	2	R	Harmonics value V12	3rd	0 to 65535	V	△	○	○	○	△
2055	0807h	2	R	Harmonics value V23/(CH2)	3rd	0 to 65535	V	△	○	○	○	△
2056	0808h	2	R	N/A		-	-	△	△	△	△	△
2057	0809h	2	R	Harmonics value V12	5th	0 to 65535	V	△	○	○	○	△
2058	080Ah	2	R	Harmonics value V23/(CH2)	5th	0 to 65535	V	△	○	○	○	△
2059	080Bh	2	R	N/A		-	-	△	△	△	△	△
2060	080Ch	2	R	Harmonics value V12	7th	0 to 65535	V	△	○	○	○	△
2061	080Dh	2	R	Harmonics value V23/(CH2)	7th	0 to 65535	V	△	○	○	○	△
2062	080Eh	2	R	N/A		-	-	△	△	△	△	△
2063	080Fh	2	R	Harmonics value V12	9th	0 to 65535	V	△	○	○	○	△
2064	0810h	2	R	Harmonics value V23/(CH2)	9th	0 to 65535	V	△	○	○	○	△
2065	0811h	2	R	N/A		-	-	△	△	△	△	△
2066	0812h	2	R	Harmonics value V12	11th	0 to 65535	V	△	○	○	○	△
2067	0813h	2	R	Harmonics value V23/(CH2)	11th	0 to 65535	V	△	○	○	○	△
2068	0814h	2	R	N/A		-	-	△	△	△	△	△
2069	0815h	2	R	Harmonics value V12	13th	0 to 65535	V	△	○	○	○	△
2070	0816h	2	R	Harmonics value V23/(CH2)	13th	0 to 65535	V	△	○	○	○	△
2071	0817h	2	R	N/A		-	-	△	△	△	△	△

(9) Harmonics current RMS monitor register

Register address		Number of byte	R/W	Register name		RANGE	Unit	Support				
								EMU4-BD1A-MB	EMU4-HD1A-MB			
Decimal	Hex								1P2W	1P3W	3P3W	3P4W
2304	0900h	2	R	Harmonics value I1	Total	0 to 65535	A	△	○	○	○	○
2305	0901h	2	R	Harmonics value I2	Total	0 to 65535	A	△	△	△	○※1	○
2306	0902h	2	R	Harmonics value I3	Total	0 to 65535	A	△	○	○	○	○
2307	0903h	2	R	Harmonics value IN	Total	0 to 65535	A	△	△	△	△	○
2308	0904h	2	R	Harmonics value I1	1st	0 to 65535	A	△	○	○	○	○
2309	0905h	2	R	Harmonics value I2	1st	0 to 65535	A	△	△	△	○※1	○
2310	0906h	2	R	Harmonics value I3	1st	0 to 65535	A	△	○	○	○	○
2311	0907h	2	R	Harmonics value IN	1st	0 to 65535	A	△	△	△	△	○
2312	0908h	2	R	Harmonics value I1	3rd	0 to 65535	A	△	○	○	○	○
2313	0909h	2	R	Harmonics value I2	3rd	0 to 65535	A	△	△	△	○※1	○
2314	090Ah	2	R	Harmonics value I3	3rd	0 to 65535	A	△	○	○	○	○
2315	090Bh	2	R	Harmonics value IN	3rd	0 to 65535	A	△	△	△	△	○
2316	090Ch	2	R	Harmonics value I1	5th	0 to 65535	A	△	○	○	○	○
2317	090Dh	2	R	Harmonics value I2	5th	0 to 65535	A	△	△	△	○※1	○
2318	090Eh	2	R	Harmonics value I3	5th	0 to 65535	A	△	○	○	○	○
2319	090Fh	2	R	Harmonics value IN	5th	0 to 65535	A	△	△	△	△	○
2320	0910h	2	R	Harmonics value I1	7th	0 to 65535	A	△	○	○	○	○
2321	0911h	2	R	Harmonics value I2	7th	0 to 65535	A	△	△	△	○※1	○
2322	0912h	2	R	Harmonics value I3	7th	0 to 65535	A	△	○	○	○	○
2323	0913h	2	R	Harmonics value IN	7th	0 to 65535	A	△	△	△	△	○
2324	0914h	2	R	Harmonics value I1	9th	0 to 65535	A	△	○	○	○	○
2325	0915h	2	R	Harmonics value I2	9th	0 to 65535	A	△	△	△	○※1	○
2326	0916h	2	R	Harmonics value I3	9th	0 to 65535	A	△	○	○	○	○
2327	0917h	2	R	Harmonics value IN	9th	0 to 65535	A	△	△	△	△	○
2328	0918h	2	R	Harmonics value I1	11th	0 to 65535	A	△	○	○	○	○
2329	0919h	2	R	Harmonics value I2	11th	0 to 65535	A	△	△	△	○※1	○
2330	091Ah	2	R	Harmonics value I3	11th	0 to 65535	A	△	○	○	○	○
2331	091Bh	2	R	Harmonics value IN	11th	0 to 65535	A	△	△	△	△	○
2332	091Ch	2	R	Harmonics value I1	13th	0 to 65535	A	△	○	○	○	○
2333	091Dh	2	R	Harmonics value I2	13th	0 to 65535	A	△	△	△	○※1	○
2334	091Eh	2	R	Harmonics value I3	13th	0 to 65535	A	△	○	○	○	○
2335	091Fh	2	R	Harmonics value IN	13th	0 to 65535	A	△	△	△	△	○

*1 The harmonic current (2-phase) is unsupported in 3P3W_2CT. When in 3P3W_2CT, it replies 0.

(10) Harmonics phase voltage distortion monitor register

Register address		Number of byte	R/W	Register name		RANGE	Unit	Support				
								EMU4-BD1A-MB	EMU4-HD1A-MB			
Decimal	Hex								1P2W	1P3W	3P3W	3P4W
2560	0A00h	2	R	THD V1N	Total	0 to 1000	×0.1%	△	△	△	△	○
2561	0A01h	2	R	THD V2N	Total	0 to 1000	×0.1%	△	△	△	△	○
2562	0A02h	2	R	THD V3N	Total	0 to 1000	×0.1%	△	△	△	△	○
2563	0A03h	2	R	Harmonics ratio V1N	3rd	0 to 1000	×0.1%	△	△	△	△	○
2564	0A04h	2	R	Harmonics ratio V2N	3rd	0 to 1000	×0.1%	△	△	△	△	○
2565	0A05h	2	R	Harmonics ratio V3N	3rd	0 to 1000	×0.1%	△	△	△	△	○
2566	0A06h	2	R	Harmonics ratio V1N	5th	0 to 1000	×0.1%	△	△	△	△	○
2567	0A07h	2	R	Harmonics ratio V2N	5th	0 to 1000	×0.1%	△	△	△	△	○
2568	0A08h	2	R	Harmonics ratio V3N	5th	0 to 1000	×0.1%	△	△	△	△	○
2569	0A09h	2	R	Harmonics ratio V1N	7th	0 to 1000	×0.1%	△	△	△	△	○
2570	0A0Ah	2	R	Harmonics ratio V2N	7th	0 to 1000	×0.1%	△	△	△	△	○
2571	0A0Bh	2	R	Harmonics ratio V3N	7th	0 to 1000	×0.1%	△	△	△	△	○
2572	0A0Ch	2	R	Harmonics ratio V1N	9th	0 to 1000	×0.1%	△	△	△	△	○
2573	0A0Dh	2	R	Harmonics ratio V2N	9th	0 to 1000	×0.1%	△	△	△	△	○
2574	0A0Eh	2	R	Harmonics ratio V3N	9th	0 to 1000	×0.1%	△	△	△	△	○
2575	0A0Fh	2	R	Harmonics ratio V1N	11th	0 to 1000	×0.1%	△	△	△	△	○
2576	0A10h	2	R	Harmonics ratio V2N	11th	0 to 1000	×0.1%	△	△	△	△	○
2577	0A11h	2	R	Harmonics ratio V3N	11th	0 to 1000	×0.1%	△	△	△	△	○
2578	0A12h	2	R	Harmonics ratio V1N	13th	0 to 1000	×0.1%	△	△	△	△	○
2579	0A13h	2	R	Harmonics ratio V2N	13th	0 to 1000	×0.1%	△	△	△	△	○
2580	0A14h	2	R	Harmonics ratio V3N	13th	0 to 1000	×0.1%	△	△	△	△	○

(11) Harmonics line voltage distortion monitor register

Register address		Number of byte	R/W	Register name		RANGE	Unit	Support				
								EMU4-BD1A-MB	EMU4-HD1A-MB			
Decimal	Hex								1P2W	1P3W	3P3W	3P4W
2816	0B00h	2	R	THD V12	Total	0 to 1000	×0.1%	△	○	○	○	△
2817	0B01h	2	R	THD V23/(CH2)	Total	0 to 1000	×0.1%	△	○	○	○	△
2818	0B02h	2	R	N/A		-	-	△	△	△	△	△
2819	0B03h	2	R	Harmonics ratio V12	3rd	0 to 1000	×0.1%	△	○	○	○	△
2820	0B04h	2	R	Harmonics ratio V23/(CH2)	3rd	0 to 1000	×0.1%	△	○	○	○	△
2821	0B05h	2	R	N/A	--	-	-	△	△	△	△	△
2822	0B06h	2	R	Harmonics ratio V12	5th	0 to 1000	×0.1%	△	○	○	○	△
2823	0B07h	2	R	Harmonics ratio V23/(CH2)	5th	0 to 1000	×0.1%	△	○	○	○	△
2824	0B08h	2	R	N/A	-	-	-	△	△	△	△	△
2825	0B09h	2	R	Harmonics ratio V12	7th	0 to 1000	×0.1%	△	○	○	○	△
2826	0B0Ah	2	R	Harmonics ratio V23/(CH2)	7th	0 to 1000	×0.1%	△	○	○	○	△
2827	0B0Bh	2	R	N/A	-	-	-	△	△	△	△	△
2828	0B0Ch	2	R	Harmonics ratio V12	9th	0 to 1000	×0.1%	△	○	○	○	△
2829	0B0Dh	2	R	Harmonics ratio V23/(CH2)	9th	0 to 1000	×0.1%	△	○	○	○	△
2830	0B0Eh	2	R	N/A	-	-	-	△	△	△	△	△
2831	0B0Fh	2	R	Harmonics ratio V12	11th	0 to 1000	×0.1%	△	○	○	○	△
2832	0B10h	2	R	Harmonics ratio V23/(CH2)	11th	0 to 1000	×0.1%	△	○	○	○	△
2833	0B11h	2	R	N/A	-	-	-	△	△	△	△	△
2834	0B12h	2	R	Harmonics ratio V12	13th	0 to 1000	×0.1%	△	○	○	○	△
2835	0B13h	2	R	Harmonics ratio V23/(CH2)	13th	0 to 1000	×0.1%	△	○	○	○	△
2836	0B14h	2	R	N/A	-	-	-	△	△	△	△	△

(12) Harmonics current content rate monitor register

Register address		Number of byte	R/W	Register name		RANGE	Unit	Support				
								EMU4-BD1A-MB	EMU4-HD1A-MB			
Decimal	Hex								1P2W	1P3W	3P3W	3P4W
3072	0C00h	2	R	THD I1	Total	0 to 1000	×0.1%	△	○	○	○	○
3073	0C01h	2	R	THD I2	Total	0 to 1000	×0.1%	△	△	△	○*1	○
3074	0C02h	2	R	THD I3	Total	0 to 1000	×0.1%	△	○	○	○	○
3075	0C03h	2	R	THD IN	Total	0 to 1000	×0.1%	△	△	△	△	○
3076	0C04h	2	R	Harmonics ratio I1	3rd	0 to 1000	×0.1%	△	○	○	○	○
3077	0C05h	2	R	Harmonics ratio I2	3rd	0 to 1000	×0.1%	△	△	△	○*1	○
3078	0C06h	2	R	Harmonics ratio I3	3rd	0 to 1000	×0.1%	△	○	○	○	○
3079	0C07h	2	R	Harmonics ratio IN	3rd	0 to 1000	×0.1%	△	△	△	△	○
3080	0C08h	2	R	Harmonics ratio I1	5th	0 to 1000	×0.1%	△	○	○	○	○
3081	0C09h	2	R	Harmonics ratio I2	5th	0 to 1000	×0.1%	△	△	△	○*1	○
3082	0C0Ah	2	R	Harmonics ratio I3	5th	0 to 1000	×0.1%	△	○	○	○	○
3083	0C0Bh	2	R	Harmonics ratio IN	5th	0 to 1000	×0.1%	△	△	△	△	○
3084	0C0Ch	2	R	Harmonics ratio I1	7th	0 to 1000	×0.1%	△	○	○	○	○
3085	0C0Dh	2	R	Harmonics ratio I2	7th	0 to 1000	×0.1%	△	△	△	○*1	○
3086	0C0Eh	2	R	Harmonics ratio I3	7th	0 to 1000	×0.1%	△	○	○	○	○
3087	0C0Fh	2	R	Harmonics ratio IN	7th	0 to 1000	×0.1%	△	△	△	△	○
3088	0C10h	2	R	Harmonics ratio I1	9th	0 to 1000	×0.1%	△	○	○	○	○
3089	0C11h	2	R	Harmonics ratio I2	9th	0 to 1000	×0.1%	△	△	△	○*1	○
3090	0C12h	2	R	Harmonics ratio I3	9th	0 to 1000	×0.1%	△	○	○	○	○
3091	0C13h	2	R	Harmonics ratio IN	9th	0 to 1000	×0.1%	△	△	△	△	○
3092	0C14h	2	R	Harmonics ratio I1	11th	0 to 1000	×0.1%	△	○	○	○	○
3093	0C15h	2	R	Harmonics ratio I2	11th	0 to 1000	×0.1%	△	△	△	○*1	○
3094	0C16h	2	R	Harmonics ratio I3	11th	0 to 1000	×0.1%	△	○	○	○	○
3095	0C17h	2	R	Harmonics ratio IN	11th	0 to 1000	×0.1%	△	△	△	△	○
3096	0C18h	2	R	Harmonics ratio I1	13th	0 to 1000	×0.1%	△	○	○	○	○
3097	0C19h	2	R	Harmonics ratio I2	13th	0 to 1000	×0.1%	△	△	△	○*1	○
3098	0C1Ah	2	R	Harmonics ratio I3	13th	0 to 1000	×0.1%	△	○	○	○	○
3099	0C1Bh	2	R	Harmonics ratio IN	13th	0 to 1000	×0.1%	△	△	△	△	○

*1 The harmonic current (2-phase) is unsupported in 3P3W_2CT. When in 3P3W_2CT, it replies 0.

(13) Waveform band monitoring data monitor register

Register address		Number of byte	R/W	Register name	RANGE	Unit	Support				
							EMU4-BD1A-MB	EMU4-HD1A-MB			
Decimal	Hex							1P2W	1P3W	3P3W	3P4W
34304	8600h	2	R	Waveform band monitoring value	0 to 1000	×0.1%	△	○	○	○	○
34305	8601h	2	R	N/A	-	−	△	△	△	△	△
34306	8602h	2	R	Waveform data 1	0 to 65535	A	△	○	○	○	○
34307	8603h	2	R	Waveform data 2	0 to 65535	A	△	○	○	○	○
34308	8604h	2	R	Waveform data 3	0 to 65535	A	△	○	○	○	○
34309	8605h	2	R	Waveform data 4	0 to 65535	A	△	○	○	○	○
34310	8606h	2	R	Waveform data 5	0 to 65535	A	△	○	○	○	○
34311	8607h	2	R	Waveform data 6	0 to 65535	A	△	○	○	○	○
34312	8608h	2	R	Waveform data 7	0 to 65535	A	△	○	○	○	○
34313	8609h	2	R	Waveform data 8	0 to 65535	A	△	○	○	○	○
34314	860Ah	2	R	Waveform data 9	0 to 65535	A	△	○	○	○	○
34315	860Bh	2	R	Waveform data 10	0 to 65535	A	△	○	○	○	○
34316	860Ch	2	R	Waveform data 11	0 to 65535	A	△	○	○	○	○
34317	860Dh	2	R	Waveform data 12	0 to 65535	A	△	○	○	○	○
34318	860Eh	2	R	Waveform data 13	0 to 65535	A	△	○	○	○	○
34319	860Fh	2	R	Waveform data 14	0 to 65535	A	△	○	○	○	○
34320	8610h	2	R	Waveform data 15	0 to 65535	A	△	○	○	○	○
34321	8611h	2	R	Waveform data 16	0 to 65535	A	△	○	○	○	○
34322	8612h	2	R	Waveform data 17	0 to 65535	A	△	○	○	○	○
34323	8613h	2	R	Waveform data 18	0 to 65535	A	△	○	○	○	○
34324	8614h	2	R	Waveform data 19	0 to 65535	A	△	○	○	○	○
34325	8615h	2	R	Waveform data 20	0 to 65535	A	△	○	○	○	○
34326	8616h	4	R/W	Number of band monitoring alarm occurrences	0 to 999999	−	△	○	○	○	○
34328	8618h	4	R/W	Number of waveform data acquisition cycles	0 to 999999	−	△	○	○	○	○

7.1.3 EcoMonitorPlus（EMU4-BM1-MB/ EMU4-HM1-MB）

(1) Setting register

Register address		Number of byte	R/W	Register name	RANGE	Unit	Support				
							EMU4-BM1-MB		EMU4-HM1-MB		
Decimal	Hex						1P2W	1P3W 3P3W	1P2W	1P3W 3P3W	3P4W
512	0200h	2	R/W	Phase wire system	1 to 4	-	○	○	○	○	○
513	0201h	4	R/W	Primary voltage (L-L: line voltage)	1 to 6600	V	○	○	○	○	○
515	0203h	4	R/W	Primary voltage (L-N: phase voltage)	10 to 66000	×0.1V	△	△	△	△	○
517	0205h	4	R/W	Secondary voltage	10 to 2200	×0.1V	○	○	○	○	○
519	0207h	4	R/W	Primary current	50 to 60000	×0.1A	○	○	○	○	○
521	0209h	2	R/W	Electric power demand time	0 to 1800	s	○	○	○	○	○
522	020Ah	2	R/W	Current demand time	0 to 1800	s	○	○	○	○	○
523	020Bh	2	R/W	16 bits Set/Reset register	Refer to 7.2.7 16bit set / reset register	-	○	○	○	○	○
524	020Ch	2	R	16 bits monitor	Refer to 7.2.8 16bit monitor	-	○	○	○	○	○
525	020Dh	2	R	N/A	-	-	△	△	△	△	△
526	020Eh	2	R	N/A	-	-	△	△	△	△	△
527	020Fh	2	R	N/A	-	-	△	△	△	△	△
528	0210h	2	R	N/A	-	-	△	△	△	△	△
529	0211h	2	R	N/A	-	-	△	△	△	△	△
530	0212h	2	R	N/A	-	-	△	△	△	△	△
531	0213h	2	R/W	5A input change (Sensor type)	0: Direct, 2: 5A	-	○	○	○	○	○
587	024Bh	2	R/W	External input method	0:non 1：pulse input 2：Contact input	-	△	△	○	○	○
588	024Ch	2	R/W	External input reset method	1：Auto,2：Hold	-	△	△	○	○	○
589	024Dh	2	R/W	External output method	0：non 1：pulse output 2：alarm output	-	△	△	○	○	○
590	024Eh	2	R/W	External output target circuit	0:1 side ,1:3side	-	△	△	○	△	△
591	024Fh	2	R/W	Pulse output unit	7.2.14	-	△	△	○	○	○
592	0250h	2	R	N/A	-	-	△	△	△	△	△
593	0251h	2	R	N/A	-	-	△	△	△	△	△
594	0252h	2	R	16bit monitor2	Refer to 7.2.9 16bit monitor2	-	○	○	○	○	○
699	02BBh	2	R/W	Counting operating time	0:OFF,1:ON	-	○	○	○	○	○
725	02D5h	4	R	N/A	-	-	※	△	※	△	△
727	02D7h	2	R	N/A	-	-	※	△	※	△	△
728	02D8h	2	R/W	Electric power demand time (3 side)	0 to 1800	s	○	△	○	△	△
729	02D9h	2	R/W	Current demand time (3 side)	0 to 1800	s	○	△	○	△	△
730	02DAh	2	R	N/A	-	-	△	△	△	△	△
731	02DBh	2	R	N/A	-	-	△	△	△	△	△
732	02DCh	2	R/W	Counting operating time(3side)	0:OFF,1:ON	-	○	△	○	△	△
733	02DDh	2	R/W	Measuring method of operating time(3side)	1: By current 2: By contact	-	△	△	○	△	△
734	02DEh	2	R/W	Cut-off rate of current	1 to 500	×0.1%	○	○	○	○	○
735	02DFh	2	R	N/A	-	-	△	△	△	△	△
736	02E0h	2	R/W	Cut-off rate of current(3side)	1 to 500	×0.1%	○	△	○	△	△
737	02E1h	2	R/W	Convert unit of pulse	Refer to 7.2.15 Unit of pulse converted and unit of electric energy converted	-	△	△	○	○	○
738	02E2h	4	R/W	Convert rate of pulse	1 to 10000000	×0.001	△	△	○	○	○
740	02E4h	2	R/W	Electric energy converted unit	Refer to 7.2.15 Unit of pulse converted and unit of electric energy converted	-	△	△	○	○	○
741	02E5h	4	R/W	Electric energy converted rate	1 to 10000000	×0.001	△	△	○	○	○
743	02E7h	2	R	N/A	-	-	△	△	△	△	△
744	02E8h	4	R	N/A	-	-	△	△	△	△	△
746	02EAh	2	R/W	Electric energy converted unit(3side)	Refer to 7.2.15 Unit of pulse converted and unit of electric energy converted	-	△	△	○	△	△
747	02EBh	4	R/W	Electric energy converted rate(3side)	1 to 10000000	×0.001	△	△	○	△	△
749	02EDh	2	R/W	2 circuit measuring setteing	0:OFF,1:ON	-	○	○	○	○	○

Register address		Number of byte	R/W	Register name	RANGE	Unit	Support				
							EMU4-BM1-MB		EMU4-HM1-MB		
Decimal	Hex						1P2W	1P3W 3P3W	1P2W	1P3W 3P3W	3P4W
753	02F1h	2	R/W	Measuring method of operating time	1: By current 2: By contact	-	△	△	○	○	○
754	02F2h	2	R	Multiplying factor of current	-127 to 127	-	○	○	○	○	○
755	02F3h	2	R	Multiplying factor of voltage	-127 to 127	-	○	○	○	○	○
756	02F4h	2	R	Multiplying factor of electric power	-127 to 127	-	○	○	○	○	○
757	02F5h	2	R	Multiplying factor of electric energy	-127 to 127	-	○	○	○	○	○
758	02F6h	2	R	Multiplying factor of power factor	-127 to 127	-	○	○	○	○	○
759	02F7h	2	R	Multiplying factor of frequency	-127 to 127	-	○	○	○	○	○

※This register is a system area. The read occasion and unsettled value, there is a possibility that I reply.

(2) Instantaneous value monitor register

Register address		Number of byte	R/W	Register name	RANGE	Unit	Support				
							EMU4-BM1-MB		EMU4-HM1-MB		
Decimal	Hex						1P2W	1P3W 3P3W	1P2W	1P3W 3P3W	3P4W
760	02F8h	2	R	Multiplying factor of content rate of harmonic current	-127 to 127	-	△	△	○	○	○
761	02F9h	2	R	Multiplying factor of content rate of harmonic voltage	-127 to 127	-	△	△	○	○	○
762	02FAh	2	R	Multiplying factor of detail electric energy	-127 to 127	-	○	○	○	○	○
763	02FBh	2	R	Model code	Refer to 7.2.13 Model code data	-	○	○	○	○	○
768	0300h	2	R	Phase 1 current	0 to 32767	A	○	○	○	○	○
769	0301h	2	R	Phase 2 current	0 to 32767	A	△	○	△	○	○
770	0302h	2	R	Phase 3 current	0 to 32767	A	○	○	○	○	○
771	0303h	2	R	Neutral current	0 to 32767	A	△	△	△	△	○
772	0304h	2	R	Average value current	0 to 32767	A	○	○	○	○	○
773	0305h	2	R	Phase 1 current demand	0 to 32767	A	○	○	○	○	○
774	0306h	2	R	Phase 2 current demand	0 to 32767	A	△	○	△	○	○
775	0307h	2	R	Phase 3 current demand	0 to 32767	A	○	○	○	○	○
776	0308h	2	R	Neutral current demand	0 to 32767	A	△	△	△	△	○
777	0309h	2	R	N/A	-	-	△	△	△	△	△
778	030Ah	2	R	Voltage V12	0 to 32767	V	○	○	○	○	○
779	030Bh	2	R	Voltage V23	0 to 32767	V	○	○	○	○	○
780	030Ch	2	R	Voltage V31	0 to 32767	V	△	○	△	○	○
781	030Dh	2	R	Average value voltage (L-L)	0 to 32767	V	○	○	○	○	○
782	030Eh	2	R	Voltage V1N	0 to 32767	V	△	△	△	△	○
783	030Fh	2	R	Voltage V2N	0 to 32767	V	△	△	△	△	○
784	0310h	2	R	Voltage V3N	0 to 32767	V	△	△	△	△	○
785	0311h	2	R	N/A	-	-	△	△	△	△	△
786	0312h	2	R	Phase 1 power factor	-500 to +1000 to 500	×0.1%	○	△	○	△	△
787	0313h	2	R	N/A	-	-	△	△	△	△	△
788	0314h	2	R	Phase 3 power factor	-500 to +1000 to 500	×0.1%	○	△	○	△	△
789	0315h	2	R	ΣPower factor	-1 to +1000 to 0	×0.1%	○※	○	○	○	○
790	0316h	2	R	Frequency	445 to 999	×0.1Hz	○	○	○	○	○
791	0317h	2	R	Phase 1 active power	-32767 to 32767	kW	○	△	○	△	△
792	0318h	2	R	N/A	-	-	△	△	△	△	△
793	0319h	2	R	Phase 3 active power	-32767 to 32767	kW	○	△	○	△	△
794	031Ah	2	R	ΣActive power	-32767 to 32767	kW	○※	○	○	○	○
795	031Bh	2	R	Phase 1 active power demand	-32767 to 32767	kW	○	△	○	△	△
796	031Ch	2	R	N/A	-	-	△	△	△	△	△
797	031Dh	2	R	Phase 3 active power demand	-32767 to 32767	kW	○	△	○	△	△
798	031Eh	2	R	ΣActive power demand	-32767 to 32767	kW	○※	○	○	○	○
799	031Fh	2	R	Phase 1 reactive power	-32767 to 32767	kvar	○	△	○	△	△
800	0320h	2	R	N/A	-	-	△	△	△	△	△
801	0321h	2	R	Phase 3 reactive power	-32767 to 32767	kvar	○	△	○	△	△
802	0322h	2	R	ΣReactive power	-32767 to 32767	kvar	○※	○	○	○	○
803	0323h	2	R	N/A	-	-	△	△	△	△	△
804	0324h	2	R	N/A	-	-	△	△	△	△	△
805	0325h	2	R	N/A	-	-	△	△	△	△	△
806	0326h	2	R	ΣApparent power	-32767 to 32767	kVA	△	△	△	△	○

※When it's with 1P2W 2 circuit measurement, the reply value is the price of 1 side.

(3) Max value monitor register

Register address		Number of byte	R/W	Register name	RANGE	Unit	Support				
							EMU4-BM1-MB		EMU4-HM1-MB		
Decimal	Hex						1P2W	1P3W 3P3W	1P2W	1P3W 3P3W	3P4W
812	032Ch	2	R	Phase 1 current max	-	-	△	△	△	△	△
813	032Dh	2	R	Phase 2 current max	-	-	△	△	△	△	△
814	032Eh	2	R	Phase 3 current max	-	-	△	△	△	△	△
815	032Fh	2	R	Phase 1 current max	-	-	△	△	△	△	△
816	0330h	2	R	Average current value max	-	-	△	△	△	△	△
817	0331h	2	R	Phase 1 current demand max	0 to 32767	A	○	△	○	△	△
818	0332h	2	R	N/A	-	-	△	△	△	△	△
819	0333h	2	R	Phase 3 current demand max	0 to 32767	A	○	△	○	△	△
820	0334h	2	R	N/A	-	-	△	△	△	△	△
821	0335h	2	R	N/A	-	-	△	△	△	△	△
822	0336h	2	R	current demand max	0 to 32767	A	○	○	○	○	○
823	0337h	2	R	Voltage V12 max	0 to 32767	V	○	△	○	△	△
824	0338h	2	R	Voltage V23 max	0 to 32767	V	○	△	○	△	△
825	0339h	2	R	N/A	-	-	△	△	△	△	△
826	033Ah	2	R	N/A	-	-	△	△	△	△	△
827	033Bh	2	R	Voltage (L-L) max	0 to 32767	V	○	○	○	○	○
828	033Ch	2	R	N/A	-	-	△	△	△	△	△
829	033Dh	2	R	N/A	-	-	△	△	△	△	△
830	033Eh	2	R	N/A	-	-	△	△	△	△	△
831	033Fh	2	R	N/A	-	-	△	△	△	△	△
832	0340h	2	R	Voltage (L-N) max	0 to 32767	V	△	△	△	△	○
833	0341h	2	R	Phase 1 power factor max	-1 to +1000 to 0	×0.1%	○	△	○	△	△
834	0342h	2	R	Phase 2 power factor max	-	-	△	△	△	△	△
835	0343h	2	R	Phase 3 power factor max	-1 to +1000 to 0	×0.1%	○	△	○	△	△
836	0344h	2	R	Σpower factor max	-1 to +1000 to 0	×0.1%	○※	○	○	○	○
837	0345h	2	R	N/A	-	-	△	△	△	△	△
838	0346h	2	R	N/A	-	-	△	△	△	△	△
839	0347h	2	R	N/A	-	-	△	△	△	△	△
840	0348h	2	R	N/A	-	-	△	△	△	△	△
841	0349h	2	R	N/A	-	-	△	△	△	△	△
842	034Ah	2	R	Phase 1 active power demand max	-32767 to 32767	kW	○	△	○	△	△
843	034Bh	2	R	N/A	-	-	△	△	△	△	△
844	034Ch	2	R	Phase 3 active power demand max	-32767 to 32767	kW	○	△	○	△	△
845	034Dh	2	R	Σactive power demand max	-32767 to 32767	kW	○※	○	○	○	○
846	034Eh	2	R	N/A	-	-	△	△	△	△	△
847	034Fh	2	R	N/A	-	-	△	△	△	△	△
848	0350h	2	R	N/A	-	-	△	△	△	△	△
849	0351h	2	R	N/A	-	-	△	△	△	△	△
850	0352h	2	R	N/A	-	-	△	△	△	△	△
851	0353h	2	R	N/A	-	-	△	△	△	△	△
852	0354h	2	R	N/A	-	-	△	△	△	△	△
853	0355h	2	R	N/A	-	-	△	△	△	△	△

※When it's with 1P2W 2 circuit measurement, the reply value is the price of 1 side.

(4) Min value monitor register

Register address		Number of byte	R/W	Register name	RANGE	Unit	Support				
							EMU4-BM1-MB		EMU4-HM1-MB		
Decimal	Hex						1P2W	1P3W 3P3W	1P2W	1P3W 3P3W	3P4W
858	035Ah	2	R	N/A	-	-	△	△	△	△	△
859	035Bh	2	R	N/A	-	-	△	△	△	△	△
860	035Ch	2	R	N/A	-	-	△	△	△	△	△
861	035Dh	2	R	N/A	-	-	△	△	△	△	△
862	035Eh	2	R	N/A	-	-	△	△	△	△	△
863	035Fh	2	R	Phase 1 current demand min	0 to 32767	A	○	△	○	△	△
864	0360h	2	R	N/A	-	-	△	△	△	△	△
865	0361h	2	R	Phase 3 current demand min	0 to 32767	A	○	○	○	○	○
866	0362h	2	R	N/A	-	-	△	△	△	△	△
867	0363h	2	R	N/A	-	-	△	△	△	△	△
868	0364h	2	R	Voltage V12 min	0 to 32767	V	○	△	○	△	△
869	0365h	2	R	Voltage V23 min	0 to 32767	V	○	△	○	△	△
870	0366h	2	R	N/A	-	-	△	△	△	△	△
871	0367h	2	R	N/A	-	-	△	△	△	△	△
872	0368h	2	R	N/A	-	-	△	△	△	△	△
873	0369h	2	R	N/A	-	-	△	△	△	△	△
874	036Ah	2	R	N/A	-	-	△	△	△	△	△
875	036Bh	2	R	N/A	-	-	△	△	△	△	△
876	036Ch	2	R	Phase 1 power factor min	-1 to +1000 to 0	×0.1%	○	△	○	△	△
877	036Dh	2	R	N/A			△	△	△	△	△
878	036Eh	2	R	Phase 3 power factor min	-1 to +1000 to 0	×0.1%	○	△	○	△	△
879	036Fh	2	R	Σpower factor min	-1 to +1000 to 0	×0.1%	○※	○	○	○	○
880	0370h	2	R	N/A	-	-	△	△	△	△	△
881	0371h	2	R	N/A	-	-	△	△	△	△	△
882	0372h	2	R	N/A	-	-	△	△	△	△	△
883	0373h	2	R	N/A	-	-	△	△	△	△	△
884	0374h	2	R	N/A	-	-	△	△	△	△	△
885	0375h	2	R	Phase 1 active power demand max	-32767 to 32767	kW	○	△	○	△	△
886	0376h	2	R	N/A	-	-	△	△	△	△	△
887	0377h	2	R	Phase 3 active power demand max	-32767 to 32767	kW	○	△	○	△	△
888	0378h	2	R	Σactive power demand max	-32767 to 32767	kW	○※	○	○	○	○
889	0379h	2	R	N/A	-	-	△	△	△	△	△
890	037Ah	2	R	N/A	-	-	△	△	△	△	△
891	037Bh	2	R	N/A	-	-	△	△	△	△	△
892	037Ch	2	R	N/A	-	-	△	△	△	△	△
893	037Dh	2	R	N/A	-	-	△	△	△	△	△
894	037Eh	2	R	N/A	-	-	△	△	△	△	△
895	037Fh	2	R	N/A	-	-	△	△	△	△	△
896	0380h	2	R	N/A	-	-	△	△	△	△	△
925	039Dh	4	R	Current unbalance rate	0 to 99999	×0.01%	△	○	△	○	○
927	039Fh	4	R	Voltage unbalance rate	0 to 99999	×0.01%	△	○	△	○	○
929	03A1h	2	R	Minimum phase current demand min	0 to 32767	A	○	○	○	○	○
930	03A2h	2	R	Minimum voltage(L-L) min	0 to 32767	V	○	○	○	○	○
931	03A3h	2	R	Minimum voltage(L-N) min	0 to 32767	V	△	△	△	△	○

※When it's with 1P2W 2 circuit measurement, the reply value is the price of 1 side.

(5) Setup register2

Register address		Number of byte	R/W	Register name	RANGE	Unit	Support						
							EMU4-BM1-MB			EMU4-HM1-MB			
Decimal	Hex						1P2W	1P3W	3P3W	1P2W	1P3W	3P3W	3P4W
1024	0400h	2	R/W	MODBUS address (*1)	01h～FFh	-	○	○	○	○	○	○	○
1025	0401h	2	R/W	MODBUS baudrate (*1)	7.2.16 Communication setting data	bps	○	○	○	○	○	○	○
1026	0402h	2	R/W	MODBUS parity (*1)	7.2.16 Communication setting data	-	○	○	○	○	○	○	○
1027	0403h	2	R/W	MODBUS stop bit (*1)	00h：1,01h：2	-	○	○	○	○	○	○	○
1028	0404h	2	R/W	Logging ID	01～FFh	-	○	○	○	○	○	○	○
1029	0405h	2	R/W	Logging data clear	0h:no, 1h:yes	-	○	○	○	○	○	○	○
1030	0406h	2	R/W	Logging unit time(Year,Month) (*2)	0～99h＋1～12h	Year+ Month	○	○	○	○	○	○	○
1031	0407h	2	R/W	Logging unit time(Day,Hour) (*2)	1～31h＋1～24h	Day+ Hour	○	○	○	○	○	○	○
1032	0408h	2	R/W	Logging unit time(Minute,Second) (*2)	1～60h＋1～60h	Minute +Second	○	○	○	○	○	○	○
1033	0409h	2	R	N/A	-	-	△	△	△	△	△	△	△
1034	040Ah	2	R/W	Upper and lower limit alarm extence	0:OFF,1:ON	-	○	○	○	○	○	○	○
1035	040Bh	2	R/W	Upper and lower limit alarm method	7.2.17 Setting for items of upper / lower alarm	-	○	○	○	○	○	○	○
1036	040Ch	4	R/W	Upper and lower limit alarm value	7.2.18 Setting for value of upper / lower alarm	-	○	○	○	○	○	○	○
1038	040Eh	2	R/W	Alarm delay time	7.2.19 Setting for alarm mask	-	○	○	○	○	○	○	○
1039	040Fh	2	R/W	Alarm reset method	1:Auto,2:Hold	-	○	○	○	○	○	○	○
1040	0410h	2	R	N/A	-	-	△	△	△	△	△	△	△
1041	0411h	2	R	N/A	-	-	△	△	△	△	△	△	△
1042	0412h	4	R	N/A	-	-	△	△	△	△	△	△	△
1044	0414h	2	R	N/A	-	-	△	△	△	△	△	△	△
1045	0415h	2	R	N/A	-	-	△	△	△	△	△	△	△
1046	0416h	2	R/W	Upper and lower limit alarm extence(3side)	0:OFF,1:ON	-	○	△	△	○	△	△	△
1047	0417h	2	R/W	Upper and lower limit alarm method(3side)	7.2.17 Setting for items of upper / lower alarm	-	○	△	△	○	△	△	△
1048	0418h	4	R/W	Upper and lower limit alarm value(3side)	7.2.18 Setting for value of upper / lower alarm	-	○	△	△	○	△	△	△
1050	041Ah	2	R/W	Alarm delay time(3side)	7.2.19 Setting for alarm mask	-	○	△	△	○	△	△	△
1051	041Bh	2	R/W	Alarm reset method(3side)	1:Auto,2:Hold	-	○	△	△	○	△	△	△
1052	041Ch	2	R/W	Simple measuring setup	0:no,1:yes	-	○	○	○	○	○	○	○
1053	041Dh	2	R/W	Power factor setup in simple measuring	-1 to +1000 to 0	×0.1%	○	○	○	○	○	○	○
1054	041Eh	2	R	N/A	-	-	△	△	△	△	△	△	△
1055	041Fh	2	R/W	Power factor setup in simple measuring(3side)	-1 to +1000 to 0	×0.1%	○	△	△	○	△	△	△
1062	0426h	2	R/W	VT use or no-use	0:no,1:yes	-	○	△	○	○	△	○	○

Register address		Number of byte	R/W	Register name	RANGE	Unit	Support						
							EMU4-BM1-MB			EMU4-HM1-MB			
Decimal	Hex						1P2W	1P3W	3P3W	1P2W	1P3W	3P3W	3P4W
1104	0450h	2	R/W	Display mode (*3)	1：Wh+A+4elements 2：Harmonics	－	○*3	○*3	○*3	○	○	○	○
1105	0451h	2	R/W	HA, HV value(*3) (*5)	1：RMS value 2：distortion rate and content rate	－	○*3	○*3	○*3	○	○	○	○
1106	0452h	2	R/W	Element1 (*3) (*6)	01h：None, 02h：Voltage, 03h：Electric power, 04h：Reactive power, 05h：Power factor, 06h：Frequency, 07h：Harmonics current、 08h：Harmonics voltage、 09h：Reactive energy (consumption lag), 0Bh：Apparent power、 20h：Current unbalance rate, 21h：Voltage unbalance rate, 22h：Electric energy (converted) , 23h：Periodic electric energy, 24h：Operating time, 25h：Pulse count and pulse conveted value 26h：Electric energy (regeneration)	－	○	○	○	○	○	○	○
1107	0453h	2	R/W	Element 2(*3) (*6)		－	○	○	○	○	○	○	○
1108	0454h	2	R/W	Element 3 (*3) (*6)		－	○	○	○	○	○	○	○
1109	0455h	2	R/W	Element 4 (*3) (*6)		－	○	○	○	○	○	○	○

*1：When changing the MODBUS set value of the sub-unit, please make the main unit and the setting same.

*2：If you change the logging unit time, the logging data held by the logging unit will be deleted.
Before changing the logging unit time, make sure that the logging data is saved in the SD card.

*3：These registers are supported from production in March 2019(F/W version is 1.01). These registers are not supported (×in upper table) for producted before February 2019(F/W version is 1.00).
Please refer to 6.3.8 of EMU4-D65 User's Manual (Details) to confirm the F/W version of Energy Measuring Unit.

*4：Setting value can be setting to registers. However, Harmonics currents and Harmonics voltage can not be displayed.
Electric energy, Operating time, Electric energy (regeneration), Current, Volrage, Electric power, Reactive energy (consumption lag), Power factor, Frequency are displayed on the screen when Display mode is set Harmonics.

*5：The setting HA,HV value is enable only when Display mode is set "Harmonics".

*6：The setting Elements are enable only when Display mode is "Wh+A+4elements".
If measurement items that can not be measured by the measuring unit are set, EMU4-D65 does not display the set item or measured value will be display as 0 in Operation mode.

(6) Electric energy, Reactive power monitor register

Register address		Number of byte	R/W	Register name		RANGE	Unit	Support				
								EMU4-BM1-MB		EMU4-HM1-MB		
Decimal	Hex							1P2W	1P3W 3P3W	1P2W	1P3W 3P3W	3P4W
1280	0500h	2	R	Integrated electric energy (Lower) (*1)	import	Less than 1000	kWh	○	○	○	○	○
1281	0501h	2	R	Integrated electric energy (Upper) (*1)		1000or more		○	○	○	○	○
1282	0502h	2	R	Integrated electric energy (Lower) (*1)	export	Less than 1000	kWh	○	○	○	○	○
1283	0503h	2	R	Integrated electric energy(Upper) (*1)		1000or more		○	○	○	○	○
1284	0504h	2	R	Reactive electric energy (Lower) (*1)	Import LAG	Less than 1000	kvarh	○	○	○	○	○
1285	0505h	2	R	Reactive electric energy(Upper) (*1)		1000or more		○	○	○	○	○
1286	0506h	2	R	N/A		-	-	△	△	△	△	△
1287	0507h	2	R	N/A		-	-	△	△	△	△	△
1288	0508h	2	R	N/A		-	-	△	△	△	△	△
1289	0509h	2	R	N/A		-	-	△	△	△	△	△
1290	050Ah	2	R	N/A		-	-	△	△	△	△	△
1291	050Bh	2	R	N/A		-	-	△	△	△	△	△
1292	050Ch	2	R	Integrated electric energy (extended) (Lower) (*1)	import	Less than 1000	kWh	○	○	○	○	○
1293	050Dh	2	R	Integrated electric energy (extended) (Upper) (*1)		1000or more		○	○	○	○	○
1294	050Eh	2	R	Integrated electric energy (extended) (Lower) (*1)	export	Less than 1000	kWh	○	○	○	○	○
1295	050Fh	2	R	Integrated electric energy (extended) (Upper) (*1)		1000or more		○	○	○	○	○
1296	0510h	2	R	Reactive energy (extended) (Lower) (*1)	Import LAG	Less than 1000	kvarh	○	○	○	○	○
1297	0511h	2	R	Reactive energy (extended) (Upper) (*1)		1000or more		○	○	○	○	○
1298	0512h	2	R	N/A		-	-	△	△	△	△	△
1299	0513h	2	R	N/A		-	-	△	△	△	△	△
1300	0514h	2	R	N/A		-	-	△	△	△	△	△
1301	0515h	2	R	N/A		-	-	△	△	△	△	△
1302	0516h	2	R	N/A		-	-	△	△	△	△	△
1303	0517h	2	R	N/A		-	-	△	△	△	△	△
1304	0518h	4	R/W	Integrated electric energy	import	0 to 999999	kWh	○	○	○	○	○
1306	051Ah	4	R/W	Integrated electric energy	export	0 to 999999	kWh	○	○	○	○	○
1308	051Ch	4	R/W	Reactive energy		0 to 999999	kvarh	○	○	○	○	○
1310	051Eh	4	R	N/A		-	-	△	△	△	△	△
1312	0520h	4	R	N/A		-	-	△	△	△	△	△
1314	0522h	4	R	N/A		-	-	△	△	△	△	△
1316	0524h	4	R	Integrated electric energy (extended)	import	0 to 999999	kWh	○	○	○	○	○
1318	0526h	4	R	Itegrated electric energy (extended)	export	0 to 999999	kWh	○	○	○	○	○
1320	0528h	4	R	Reactive energy (extended)	import	0 to 999999	kvarh	○	○	○	○	○
1374	055Eh	4	R/W	Periodic electric energy	export	0 to 999999	kWh	△	△	○	○	○
1376	0560h	4	R/W	Pulse count		0 to 999999		△	△	○	○	○
1378	0562h	4	R/W	Operating time		0 to 999999	h	○	○	○	○	○
1444	05A4h	2	R	N/A		-	-	△	△	△	△	△
1445	05A5h	2	R	N/A		-	-	△	△	△	△	△
1446	05A6h	2	R	N/A		-	-	△	△	△	△	△
1447	05A7h	2	R	N/A		-	-	△	△	△	△	△
1448	05A8h	4	R	N/A		-	-	△	△	△	△	△
1450	05AAh	4	R	N/A		-	-	△	△	△	△	△
1452	05ACh	4	R	N/A		-	-	△	△	△	△	△
1454	05AEh	4	R	N/A		-	-	△	△	△	△	△
1456	05B0h	2	R	Integrated electric energy(3side) (Lower) (*1)	Import	Less than 1000	kWh	○	△	○	△	△

Register address		Number of byte	R/W	Register name		RANGE	Unit	Support				
								EMU4-BM1-MB		EMU4-HM1-MB		
Decimal	Hex							1P2W	1P3W 3P3W	1P2W	1P3W 3P3W	3P4W
1457	05B1h	2	R	Integrated electric energy(3side) (Upper) (*1)		1000or more	kWh	○	△	○	△	△
1458	05B2h	2	R	Integrated electric energy(3side) (Lower) (*1)	export	Less than 1000	kWh	○	△	○	△	△
1459	05B3h	2	R	Integrated electric energy(3side) (Upper) (*1)		1000or more	kWh	○	△	○	△	△
1460	05B4h	4	R/W	Integrated electric energy(3side)	Import	0 to 999999	kWh	○	△	○	△	△
1462	05B6h	4	R/W	Integrated electric energy(3side)	export	0 to 999999	kWh	○	△	○	△	△
1464	05B8h	4	R	Integrated electric energy (extended) (3side)	Import	0 to 999999	kWh	○	△	○	△	△
1466	05BAh	4	R	Integrated electric energy (extended) (3side)	export	0 to 999999	kWh	○	△	○	△	△
1468	05BCh	4	R/W	N/A		-	-	△	△	△	△	△
1470	05BEh	4	R/W	Operating time(3side)		0 to 999999	h	○	△	○	△	△
1472	05C0h	4	R/W	N/A		-	-	△	△	△	△	△
1474	05C2h	4	R/W	Periodic electric energy(3side)		0 to 999999	kWh	△	△	○	△	△
1476	05C4h	4	R/W	Electric energy convertion		0 to 999999		△	△	○	○	○
1478	05C6h	4	R/W	N/A		-	-	△	△	△	△	△
1480	05C8h	4	R/W	Electric energy convertion(3side)		0 to 999999	-	△	△	○	△	△
1482	05CAh	4	R/W	Pluse convertion		0 to 999999	-	△	△	○	○	○

*1：These 6-digit energy values are responded by dividing into upper and lower three digits.

<Example> In case of Integrated electric energy is 12345.6 kWh.(Full load power：120kW or more and less than 1200kW)

Register address		Response data (Decimal)
1280	0500h	456
1281	0501h	123
1304	0518h	123456

(7) Harmonics phase voltage RMS monitor register

Register address		Number of byte	R/W	Register name		RANGE	Unit	Support			
								EMU4-BM1-MB	EMU4-HM1-MB		
Decimal	Hex								1P2W	1P3W 3P3W	3P4W
1792	0700h	2	R	Harmonics value V1N	Total	0 to 32767	V	×	△	△	○
1793	0701h	2	R	Harmonics value V2N	Total	0 to 32767	V	×	△	△	○
1794	0702h	2	R	Harmonics value V3N	Total	0 to 32767	V	×	△	△	○
1795	0703h	2	R	Harmonics value V1N	1st	0 to 32767	V	×	△	△	○
1796	0704h	2	R	Harmonics value V2N	1st	0 to 32767	V	×	△	△	○
1797	0705h	2	R	Harmonics value V3N	1st	0 to 32767	V	×	△	△	○
1798	0706h	2	R	Harmonics value V1N	3rd	0 to 32767	V	×	△	△	○
1799	0707h	2	R	Harmonics value V2N	3rd	0 to 32767	V	×	△	△	○
1800	0708h	2	R	Harmonics value V3N	3rd	0 to 32767	V	×	△	△	○
1801	0709h	2	R	Harmonics value V1N	5th	0 to 32767	V	×	△	△	○
1802	070Ah	2	R	Harmonics value V2N	5th	0 to 32767	V	×	△	△	○
1803	070Bh	2	R	Harmonics value V3N	5th	0 to 32767	V	×	△	△	○
1804	070Ch	2	R	Harmonics value V1N	7th	0 to 32767	V	×	△	△	○
1805	070Dh	2	R	Harmonics value V2N	7th	0 to 32767	V	×	△	△	○
1806	070Eh	2	R	Harmonics value V3N	7th	0 to 32767	V	×	△	△	○
1807	070Fh	2	R	Harmonics value V1N	9th	0 to 32767	V	×	△	△	○
1808	0710h	2	R	Harmonics value V2N	9th	0 to 32767	V	×	△	△	○
1809	0711h	2	R	Harmonics value V3N	9th	0 to 32767	V	×	△	△	○
1810	0712h	2	R	Harmonics value V1N	11th	0 to 32767	V	×	△	△	○
1811	0713h	2	R	Harmonics value V2N	11th	0 to 32767	V	×	△	△	○
1812	0714h	2	R	Harmonics value V3N	11th	0 to 32767	V	×	△	△	○
1813	0715h	2	R	Harmonics value V1N	13th	0 to 32767	V	×	△	△	○
1814	0716h	2	R	Harmonics value V2N	13th	0 to 32767	V	×	△	△	○
1815	0717h	2	R	Harmonics value V3N	13th	0 to 32767	V	×	△	△	○

(8) Harmonics line voltage RMS monitor register

Register address		Number of byte	R/W	Register name		RANGE	Unit	Support			
								EMU4-BM1-MB	EMU4-HM1-MB		
Decimal	Hex								1P2W	1P3W 3P3W	3P4W
2048	0800h	2	R	Harmonics value V12	Total	0 to 32767	V	×	○	○	△
2049	0801h	2	R	Harmonics value V23	Total	0 to 32767	V	×	○	○	△
2050	0802h	2	R	N/A	N/A	−	−	×	△	△	△
2051	0803h	2	R	Harmonics value V12	1st	0 to 32767	V	×	○	○	△
2052	0804h	2	R	Harmonics value V23	1st	0 to 32767	V	×	○	○	△
2053	0805h	2	R	N/A	N/A	−	−	×	△	△	△
2054	0806h	2	R	Harmonics value V12	3rd	0 to 32767	V	×	○	○	△
2055	0807h	2	R	Harmonics value V23	3rd	0 to 32767	V	×	○	○	△
2056	0808h	2	R	N/A	N/A	−	−	×	△	△	△
2057	0809h	2	R	Harmonics value V12	5th	0 to 32767	V	×	○	○	△
2058	080Ah	2	R	Harmonics value V23	5th	0 to 32767	V	×	○	○	△
2059	080Bh	2	R	N/A	N/A	−	−	×	△	△	△
2060	080Ch	2	R	Harmonics value V12	7th	0 to 32767	V	×	○	○	△
2061	080Dh	2	R	Harmonics value V23	7th	0 to 32767	V	×	○	○	△
2062	080Eh	2	R	N/A	N/A	−	−	×	△	△	△
2063	080Fh	2	R	Harmonics value V12	9th	0 to 32767	V	×	○	○	△
2064	0810h	2	R	Harmonics value V23	9th	0 to 32767	V	×	○	○	△
2065	0811h	2	R	N/A	N/A	−	−	×	△	△	△
2066	0812h	2	R	Harmonics value V12	11th	0 to 32767	V	×	○	○	△
2067	0813h	2	R	Harmonics value V23	11th	0 to 32767	V	×	○	○	△
2068	0814h	2	R	N/A	N/A	−	−	×	△	△	△
2069	0815h	2	R	Harmonics value V12	13th	0 to 32767	V	×	○	○	△
2070	0816h	2	R	Harmonics value V23	13th	0 to 32767	V	×	○	○	△
2071	0817h	2	R	N/A	N/A	−	−	×	△	△	△

(9) Harmonics current RMS monitor register

Register address		Number of byte	R/W	Register name		RANGE	Unit	Support			
								EMU4-BM1-MB	EMU4-HM1-MB		
Decimal	Hex								1P2W	1P3W 3P3W	3P4W
2304	0900h	2	R	Harmonics value I1	Total	0 to 32767	A	×	○	○	○
2305	0901h	2	R	Harmonics value I2	Total	0 to 32767	A	×	△	△	○
2306	0902h	2	R	Harmonics value I3	Total	0 to 32767	A	×	○	○	○
2307	0903h	2	R	Harmonics value IN	Total	0 to 32767	A	×	△	△	○
2308	0904h	2	R	Harmonics value I1	1st	0 to 32767	A	×	○	○	○
2309	0905h	2	R	Harmonics value I2	1st	0 to 32767	A	×	△	△	○
2310	0906h	2	R	Harmonics value I3	1st	0 to 32767	A	×	○	○	○
2311	0907h	2	R	Harmonics value IN	1st	0 to 32767	A	×	△	△	○
2312	0908h	2	R	Harmonics value I1	3rd	0 to 32767	A	×	○	○	○
2313	0909h	2	R	Harmonics value I2	3rd	0 to 32767	A	×	△	△	○
2314	090Ah	2	R	Harmonics value I3	3rd	0 to 32767	A	×	○	○	○
2315	090Bh	2	R	Harmonics value IN	3rd	0 to 32767	A	×	△	△	○
2316	090Ch	2	R	Harmonics value I1	5th	0 to 32767	A	×	○	○	○
2317	090Dh	2	R	Harmonics value I2	5th	0 to 32767	A	×	△	△	○
2318	090Eh	2	R	Harmonics value I3	5th	0 to 32767	A	×	○	○	○
2319	090Fh	2	R	Harmonics value IN	5th	0 to 32767	A	×	△	△	○
2320	0910h	2	R	Harmonics value I1	7th	0 to 32767	A	×	○	○	○
2321	0911h	2	R	Harmonics value I2	7th	0 to 32767	A	×	△	△	○
2322	0912h	2	R	Harmonics value I3	7th	0 to 32767	A	×	○	○	○
2323	0913h	2	R	Harmonics value IN	7th	0 to 32767	A	×	△	△	○
2324	0914h	2	R	Harmonics value I1	9th	0 to 32767	A	×	○	○	○
2325	0915h	2	R	Harmonics value I2	9th	0 to 32767	A	×	△	△	○
2326	0916h	2	R	Harmonics value I3	9th	0 to 32767	A	×	○	○	○
2327	0917h	2	R	Harmonics value IN	9th	0 to 32767	A	×	△	△	○
2328	0918h	2	R	Harmonics value I1	11th	0 to 32767	A	×	○	○	○
2329	0919h	2	R	Harmonics value I2	11th	0 to 32767	A	×	△	△	○
2330	091Ah	2	R	Harmonics value I3	11th	0 to 32767	A	×	○	○	○
2331	091Bh	2	R	Harmonics value IN	11th	0 to 32767	A	×	△	△	○
2332	091Ch	2	R	Harmonics value I1	13th	0 to 32767	A	×	○	○	○
2333	091Dh	2	R	Harmonics value I2	13th	0 to 32767	A	×	△	△	○
2334	091Eh	2	R	Harmonics value I3	13th	0 to 32767	A	×	○	○	○
2335	091Fh	2	R	Harmonics value IN	13th	0 to 32767	A	×	△	△	○

(10) Harmonics phase voltage distortion monitor register

Register address		Register address	R/W	Register name		RANGE	Unit	Support			
								EMU4-BM1-MB	EMU4-HM1-MB		
Decimal	Hex								1P2W	1P3W 3P3W	3P4W
2560	0A00h	2	R	THD V1N	Total	0 to 1000	×0.1%	×	△	△	○
2561	0A01h	2	R	THD V2N	Total	0 to 1000	×0.1%	×	△	△	○
2562	0A02h	2	R	THD V3N	Total	0 to 1000	×0.1%	×	△	△	○
2563	0A03h	2	R	Harmonics ratio V1N	3rd	0 to 1000	×0.1%	×	△	△	○
2564	0A04h	2	R	Harmonics ratio V2N	3rd	0 to 1000	×0.1%	×	△	△	○
2565	0A05h	2	R	Harmonics ratio V3N	3rd	0 to 1000	×0.1%	×	△	△	○
2566	0A06h	2	R	Harmonics ratio V1N	5th	0 to 1000	×0.1%	×	△	△	○
2567	0A07h	2	R	Harmonics ratio V2N	5th	0 to 1000	×0.1%	×	△	△	○
2568	0A08h	2	R	Harmonics ratio V3N	5th	0 to 1000	×0.1%	×	△	△	○
2569	0A09h	2	R	Harmonics ratio V1N	7th	0 to 1000	×0.1%	×	△	△	○
2570	0A0Ah	2	R	Harmonics ratio V2N	7th	0 to 1000	×0.1%	×	△	△	○
2571	0A0Bh	2	R	Harmonics ratio V3N	7th	0 to 1000	×0.1%	×	△	△	○
2572	0A0Ch	2	R	Harmonics ratio V1N	9th	0 to 1000	×0.1%	×	△	△	○
2573	0A0Dh	2	R	Harmonics ratio V2N	9th	0 to 1000	×0.1%	×	△	△	○
2574	0A0Eh	2	R	Harmonics ratio V3N	9th	0 to 1000	×0.1%	×	△	△	○
2575	0A0Fh	2	R	Harmonics ratio V1N	11th	0 to 1000	×0.1%	×	△	△	○
2576	0A10h	2	R	Harmonics ratio V2N	11th	0 to 1000	×0.1%	×	△	△	○
2577	0A11h	2	R	Harmonics ratio V3N	11th	0 to 1000	×0.1%	×	△	△	○
2578	0A12h	2	R	Harmonics ratio V1N	13th	0 to 1000	×0.1%	×	△	△	○
2579	0A13h	2	R	Harmonics ratio V2N	13th	0 to 1000	×0.1%	×	△	△	○
2580	0A14h	2	R	Harmonics ratio V3N	13th	0 to 1000	×0.1%	×	△	△	○

(11) Harmonics line voltage distortion monitor register

Register address		Number of byte	R/W	Register name		RANGE	Unit	Support			
								EMU4-BM1-MB	EMU4-HM1-MB		
Decimal	Hex								1P2W	1P3W 3P3W	3P4W
2816	0B00h	2	R	THD V12	Total	0 to 1000	×0.1%	×	○	○	△
2817	0B01h	2	R	THD V23	Total	0 to 1000	×0.1%	×	○	○	△
2818	0B02h	2	R	THD V31	Total	-	-	×	△	△	△
2819	0B03h	2	R	Harmonics ratio V12	3rd	0 to 1000	×0.1%	×	○	○	△
2820	0B04h	2	R	Harmonics ratio V23	3rd	0 to 1000	×0.1%	×	○	○	△
2821	0B05h	2	R	Harmonics ratio V31	3rd	-	-	×	△	△	△
2822	0B06h	2	R	Harmonics ratio V12	5th	0 to 1000	×0.1%	×	○	○	△
2823	0B07h	2	R	Harmonics ratio V23	5th	0 to 1000	×0.1%	×	○	○	△
2824	0B08h	2	R	Harmonics ratio V31	5th	-	-	×	△	△	△
2825	0B09h	2	R	Harmonics ratio V12	7th	0 to 1000	×0.1%	×	○	○	△
2826	0B0Ah	2	R	Harmonics ratio V23	7th	0 to 1000	×0.1%	×	○	○	△
2827	0B0Bh	2	R	Harmonics ratio V31	7th	-	-	×	△	△	△
2828	0B0Ch	2	R	Harmonics ratio V12	9th	0 to 1000	×0.1%	×	○	○	△
2829	0B0Dh	2	R	Harmonics ratio V23	9th	0 to 1000	×0.1%	×	○	○	△
2830	0B0Eh	2	R	Harmonics ratio V31	9th	-	-	×	△	△	△
2831	0B0Fh	2	R	Harmonics ratio V12	11th	0 to 1000	×0.1%	×	○	○	△
2832	0B10h	2	R	Harmonics ratio V23	11th	0 to 1000	×0.1%	×	○	○	△
2833	0B11h	2	R	Harmonics ratio V31	11th	-	-	×	△	△	△
2834	0B12h	2	R	Harmonics ratio V12	13th	0 to 1000	×0.1%	×	○	○	△
2835	0B13h	2	R	Harmonics ratio V23	13th	0 to 1000	×0.1%	×	○	○	△
2836	0B14h	2	R	Harmonics ratio V31	13th	-	-	×	△	△	△

(12) Harmonics current content rate monitor register

Register address		Number of byte	R/W	Register name		RANGE	Unit	Support			
								EMU4-BM1-MB	EMU4-HM1-MB		
Decimal	Hex								1P2W	1P3W 3P3W	3P4W
3072	0C00h	2	R	THD I1	Total	0 to 1000	×0.1%	×	○	○	○
3073	0C01h	2	R	THD I2	Total	0 to 1000	×0.1%	×	△	△	○
3074	0C02h	2	R	THD I3	Total	0 to 1000	×0.1%	×	○	○	○
3075	0C03h	2	R	THD IN	Total	0 to 1000	×0.1%	×	△	△	○
3076	0C04h	2	R	Harmonics ratio I1	3rd	0 to 1000	×0.1%	×	○	○	○
3077	0C05h	2	R	Harmonics ratio I2	3rd	0 to 1000	×0.1%	×	△	△	○
3078	0C06h	2	R	Harmonics ratio I3	3rd	0 to 1000	×0.1%	×	○	○	○
3079	0C07h	2	R	Harmonics ratio IN	3rd	0 to 1000	×0.1%	×	△	△	○
3080	0C08h	2	R	Harmonics ratio I1	5th	0 to 1000	×0.1%	×	○	○	○
3081	0C09h	2	R	Harmonics ratio I2	5th	0 to 1000	×0.1%	×	△	△	○
3082	0C0Ah	2	R	Harmonics ratio I3	5th	0 to 1000	×0.1%	×	○	○	○
3083	0C0Bh	2	R	Harmonics ratio IN	5th	0 to 1000	×0.1%	×	△	△	○
3084	0C0Ch	2	R	Harmonics ratio I1	7th	0 to 1000	×0.1%	×	○	○	○
3085	0C0Dh	2	R	Harmonics ratio I2	7th	0 to 1000	×0.1%	×	△	△	○
3086	0C0Eh	2	R	Harmonics ratio I3	7th	0 to 1000	×0.1%	×	○	○	○
3087	0C0Fh	2	R	Harmonics ratio IN	7th	0 to 1000	×0.1%	×	△	△	○
3088	0C10h	2	R	Harmonics ratio I1	9th	0 to 1000	×0.1%	×	○	○	○
3089	0C11h	2	R	Harmonics ratio I2	9th	0 to 1000	×0.1%	×	△	△	○
3090	0C12h	2	R	Harmonics ratio I3	9th	0 to 1000	×0.1%	×	○	○	○
3091	0C13h	2	R	Harmonics ratio IN	9th	0 to 1000	×0.1%	×	△	△	○
3092	0C14h	2	R	Harmonics ratio I1	11th	0 to 1000	×0.1%	×	○	○	○
3093	0C15h	2	R	Harmonics ratio I2	11th	0 to 1000	×0.1%	×	△	△	○
3094	0C16h	2	R	Harmonics ratio I3	11th	0 to 1000	×0.1%	×	○	○	○
3095	0C17h	2	R	Harmonics ratio IN	11th	0 to 1000	×0.1%	×	△	△	○
3096	0C18h	2	R	Harmonics ratio I1	13th	0 to 1000	×0.1%	×	○	○	○
3097	0C19h	2	R	Harmonics ratio I2	13th	0 to 1000	×0.1%	×	△	△	○
3098	0C1Ah	2	R	Harmonics ratio I3	13th	0 to 1000	×0.1%	×	○	○	○
3099	0C1Bh	2	R	Harmonics ratio IN	13th	0 to 1000	×0.1%	×	△	△	○

7.1.4 EcoMonitorPlus（EMU4-LG1-MB）

(1) Setting register

Register address		Number of byte	R/W	Register name	Register name	RANGE	Support
Decimal	Hex						EMU4-LG1-MB
512	0200h	2	R/W	Phase wire system	1 to 4	-	○
513	0201h	4	R	N/A	-	-	△
515	0203h	4	R	N/A	-	-	△
517	0205h	4	R	N/A	-	-	△
519	0207h	4	R	N/A	-	-	△
521	0209h	2	R	N/A	-	-	△
522	020Ah	2	R	N/A	-	-	△
523	020Bh	2	R/W	16 bits Set/Reset register	Refer to 7.2.7 16bit set / reset register	-	○
524	020Ch	2	R	16 bits monitor	Refer to 7.2.8 16bit monitor	-	○
525	020Dh	2	R/W	Leak current demand time	0, 300 to 1800	s	○
594	0252h	2	R	16 bits monitor2	Refer to 7.2.9 16bit monitor2	-	○
754	02F2h	2	R	Multiplying factor of leak content rate of harmonic current	-127 to 127	-	○
763	02FBh	2	R	Model code	Refer to 7.2.13 Model code data	-	○

(2) Instantaneous/ Max value monitor register

Register address		Number of byte	R/W	Register name	RANGE	Unit	Support	
							EMU4-LG1-MB	
Decimal	Hex						1P2W 1P3W 3P3W	3P4W
809	0329h	2	R	Leak current	0 to 32767	mA	○	○
810	032Ah	2	R	Leak current demand	0 to 32767	mA	○	○
856	0358h	2	R	Leak current max	0 to 32767	mA	○	○
857	0359h	2	R	Leak current demand max	0 to 32767	mA	○	○
932	03A4h	2	R	Leak current for resistance	0 to 32767	mA	○	△
933	03A5h	2	R	Leak current for resistance demand	0 to 32767	mA	○	△
934	03A6h	2	R	Ior differential conversion	-32768 to 32767	mA	○	△
935	03A7h	2	R	Leak current for resistance max	0 to 32767	mA	○	△
936	03A8h	2	R	Leak current for resistance demand max	0 to 32767	mA	○	△
937	03A9h	2	R	Ior differential conversion max	-32768 to 32767	mA	○	△
938	03AAh	4	R	Io 1-alarm	0 to 999999		○	○
940	03ACh	4	R	Io 2-alarm	0 to 999999		○	○
942	03AEh	4	R	Ior 1-alarm	0 to 999999		○	△
944	03B0h	4	R	Ior 2-alarm	0 to 999999		○	△

(3) Setup register2

Register address		Number of byte	R/W	Register name	RANGE	Unit	Support	
							EMU4-LG1-MB	
Decimal	Hex						1P2W 1P3W 3P3W	3P4W
1024	0400h	2	R/W	MODBUS address (*1)	01h～FFh	-	○	○
1025	0401h	2	R/W	MODBUS baudrate (*1)	Refer to 7.2.16 Communication setting data	bps	○	○
1026	0402h	2	R/W	MODBUS parity (*1)	Refer to 7.2.16 Communication setting data	-	○	○
1027	0403h	2	R/W	MODBUS stop bit (*1)	00h：1,01h：2	-	○	○
1028	0404h	2	R/W	Logging ID	01～FFh	-	○	○
1029	0405h	2	R/W	Logging data clear	0:no, 1:yas	-	○	○
1030	0406h	2	R/W	Logging unit time(Year,Month) (*2)	0～99h＋1～12h	Year+ Month	○	○
1031	0407h	2	R/W	Logging unit time(Day,Hour) (*2)	1～31h＋1～24h	Day+ Hour	○	○
1032	0408h	2	R/W	Logging unit time(Minute,Second) (*2)	1～60h＋1～60h	Minute +Second	○	○
1033	0409h	2	R	N/A	-	-	△	△
1034	040Ah	2	R	N/A	-	-	△	△
1035	040Bh	2	R	N/A	-	-	△	△
1036	040Ch	4	R	N/A	-	-	△	△
1038	040Eh	2	R/W	Alarm delay time	Refer to 7.2.18 Setting for value of upper / lower alarm	-	○	○
1039	040Fh	2	R/W	Alarm reset method	1:auto,2:hold	-	○	○
1040	0410h	2	R	N/A	-	-	△	△
1041	0411h	2	R	N/A	-	-	△	△
1042	0412h	4	R	N/A	-	-	△	△
1044	0414h	2	R	N/A	-	-	△	△
1045	0415h	2	R	N/A	-	-	△	△
1046	0416h	2	R	N/A	-	-	△	△
1047	0417h	2	R	N/A	-	-	△	△
1048	0418h	4	R	N/A	-	-	△	△
1050	041Ah	2	R	N/A	-	-	△	△
1051	041Bh	2	R	N/A	-	-	△	△
1052	041Ch	2	R	N/A	-	-	△	△
1053	041Dh	2	R	N/A	-	-	△	△
1054	041Eh	2	R	N/A	-	-	△	△
1055	041Fh	2	R	N/A	-	-	△	△
1056	0420h	2	R/W	Measurement mode	0:Low SENS mode, 1:High SENS mode	-	○	○
1057	0421h	2	R/W	Ior differential conversion	0:no,1:yes	-	○	○
1058	0422h	2	R/W	Ior differential conversion value — Low SENS mode,	0 to 1000	mA	○	○
				Ior differential conversion value — High SENS mode	0 to 1000	×0.01mA		
1059	0423h	2	R/W	Io monitoring elements	1:Present value, 2: Demand value	-	○	○
1060	0424h	2	R/W	Ior monitoring elements	1:Present value, 2: Demand value 3: Differential conversion value	-	○	△
1061	0425h	2	R/W	External output target	Refer to 7.2.20 Setting for alarm of external output	-	○	○

*1：When the MODBUS relation setting of the main unit is changed, the set value of the sub-unit is also changed.
But, it isn't changed until it restarts.

*2：If you change the logging unit time, the logging data held by the logging unit will be deleted.
Before changing the logging unit time, make sure that the logging data is saved in the SD card.

(4) Alarm setup register

Register address		Number of byte	R/W	Register name		RANGE	Unit	Support EMU4-LG1-MB	
Decimal	Hex							1P2W 1P3W 3P3W	3P4W
1582	062Eh	2	R/W	Io 1-alarm setting value	Low SENS mode,	0 to 1000	mA	○	○
					High SENS mode,	0 to 10000	×0.01mA	○	○
1583	062Fh	2	R/W	Io 2-alarm setting value	Low SENS mode,	0 to 1000	mA	○	○
					High SENS mode,	0 to 10000	×0.01mA	○	○
1584	0630h	2	R/W	Ior 1-alarm setting value	Low SENS mode,	0 to 1000	mA	○	○
					High SENS mode,	0 to 10000	×0.01mA	○	○
1585	0631h	2	R/W	Ior 2-alarm setting value	Low SENS mode,	0 to 1000	mA	○	○
					High SENS mode,	0 to 10000	×0.01mA	○	○
1586	0632h	4	R/W	Io 1-alarm count setting value		0 to 999999		○	○
1588	0634h	4	R/W	Io 2-alarm count setting value		0 to 999999		○	○
1590	0636h	4	R/W	Ior 1-alarm count setting value		0 to 999999		○	△
1592	0638h	4	R/W	Ior 2-alarm count setting value		0 to 999999		○	△

7.1.5 EcoMonitorPlus（EMU4-CNT-MB）

* When the control unit is the parent terminal, it is not possible to write/read each register because it cannot communicate with the superior monitoring systems.
The following shows whether or not register is supported when the control unit is the parent terminal (slave station).
For the parent terminal (master station/slave station), refer to the User's Manual (Details).
* RUN/STOP in the figure indicates the control operation state of the control unit.

(1) Setting register

Register address		Number of byte	R/W	Register name	RANGE	Unit	Support			
							EMU4-CNT-MB			
							Parent terminal (Slave station)			
							RUN		STOP	
Decimal	Hex						R	W	R	W
523	020Bh	2	R/W	16 bits Set/Reset register	Refer to 7.2.7 16bit set / reset register	-	○	○	○	○
524	020Ch	2	R	16 bits monitor	Refer to 7.2.8 16bit monitor	-	○	×	○	×
526	020Eh	2	R/W	Current time(Year,Month) (*1)(*2)	0～99h＋1～12h	-	○	×	○	○
527	020Fh	2	R/W	Current time(Day,Hour) (*1)(*2)	1～31h＋0～23h	-	○	×	○	○
528	0210h	2	R/W	Current time(Minute,Second) (*1)(*2)	0～59h＋0～59h	-	○	×	○	○
701	02BDh	2	R	F/W version：Major	-	-	○	×	○	×
702	02BEh	2	R	F/W version：Minor	-	-	○	×	○	×
703	02BFh	2	R	F/W version：Revision	-	-	○	×	○	×
763	02FBh	2	R	Model code	Refer to 7.2.13 Model code data	-	○	×	○	×

*1:When the loggin unit (EMU4-LM) is connected to the control unit, writing the Current time chages the current time held by the control unit and the current time held by the logging unit.
Also, the logging data held by the logging unit will be deleted. Before changing the current time, make sure that the logging data is saved in the SD card.

*2:After 23:59:59 on December 31,2099, the control unit stops control operation.
To restart the control operation, reset the time and set the control operation state to RUN.

(2) Setting register2

Register address		Number of byte	R/W	Register name	RANGE	Unit	Support			
							EMU4-CNT-MB			
							Parent terminal (Slave station)			
							RUN		STOP	
Decimal	Hex						R	W	R	W
1024	0400h	2	R/W	MODBUS address (*1)	01h～FFh	-	○	×	○	○
1025	0401h	2	R/W	MODBUS baudrate (*1)	Refer to 7.2.16 Communication setting data	bps	○	×	○	○
1026	0402h	2	R/W	MODBUS parity (*1)	Refer to 7.2.16 Communication setting data	-	○	×	○	○
1027	0403h	2	R/W	MODBUS stop bit (*1)	00h：1,01h：2	-	○	×	○	○
1028	0404h	2	R/W	Logging ID	01～FFh	-	○	×	○	○
1029	0405h	2	R/W	Logging data clear	0:no, 1:yas	-	○	×	○	○
1030	0406h	2	R/W	Logging unit time(Year,Month) (*2)	0～99h＋1～12h	Year+ Month	○	×	○	○
1031	0407h	2	R/W	Logging unit time(Day,Hour) (*2)	1～31h＋1～24h	Day+ Hour	○	×	○	○
1032	0408h	2	R/W	Logging unit time(Minute,Second) (*2)	1～60h＋1～60h	Minute +Second	○	×	○	○
1066	042Ah	4	R	MAC address （Reserve 2byte upper2byte）	-	-	○	×	○	×
1068	042Ch	4	R	MAC address（lower 4byte）	-	-	○	×	○	×
1070	042Eh	4	R/W	IP address（IPv4）	-	-	○	×	○	×
1072	0430h	4	R/W	Sub-net mask	-	-	○	×	○	×
1074	0432h	4	R/W	Default gateway	-	-	○	×	○	×
1078	0436h	2	R/W	Analog output specification	0h：Current output（4～20mA） 1h：Voltage output（0～5V） 2h：State before analog output (*3)	-	○	○	○	○
1079	0437h	4	R/W	Analog output value	■Analog output specification：Current output 4000～20000（=4.000mA～20.000mA） ■Analog output specification：Voltage output 0～5000（=0.000V～5.000V）	-	○	○	○	○
1081	0439h	2	R/W	Control operation state （RUN/STOP）	0h：Off-control（STOP） 1h：In control（RUN）	-	○	○	○	○

*1：When the MODBUS relation setting of the main unit is changed, the set value of the sub-unit is also changed. But, it isn't changed until it restarts.

*2：When the loggin unit (EMU4-LM) is connected to the control unit, writing the logging unit time chages the current time held by the control unit and the current time held by the logging unit.
Also, the logging data held by the logging unit will be deleted. Before changing the logging unit time, make sure that the logging data is saved in the SD card.

*3：State before analog output is not writable. It can only be read.
State before analog output indicates the initial state before analog output.

7.1.6 EcoMonitorPlus（EMU4-A2/EMU4-VA2）(For Circuit ID is 2)

(1) Setup register

Register address		Number of byte	R/W	Register name	RANGE	Unit	Support		
							EMU4-A2/ EMU4-VA2		
Decimal	Hex						1P2W	1P3W 3P3W	3P4W
32768	8000h	2	R	Model code	Refer to 7.2.13 Model code data	-	○	○	○
32769	8001h	2	R/W	16 bits Set/Reset register	Refer to 7.2.7 16bit set / reset register	-	○	○	○
32770	8002h	2	R	16 bits monitor	Refer to 7.2.8 16bit monitor	-	○	○	○
32771	8003h	2	R	Multiplying factor of current	-127 to 127	-	○	○	○
32772	8004h	2	R	Multiplying factor of voltage	-127 to 127	-	○	○	○
32773	8005h	2	R	Multiplying factor of electric power	-127 to 127	-	○	○	○
32774	8006h	2	R	Multiplying factor of electric energy	-127 to 127	-	○	○	○
32775	8007h	2	R	Multiplying factor of power factor	-127 to 127	-	○	○	○
32776	8008h	2	R	Multiplying factor of frequency	-127 to 127	-	○	○	○
32777	8009h	2	R	Multiplying factor of content rate of harmonic current	-127 to 127	-	○	○	○
32778	800Ah	2	R	Multiplying factor of content rate of harmonic voltage	-127 to 127	-	○	○	○
32779	800Bh	2	R	Multiplying factor of electric energy (extended)	-	-	○	○	○
32780	800Ch	2	R/W	Phase wire system	1 to 4	-	○	○	○
32781	800Dh	4	R/W	Primary voltage (L-L: line voltage)	1 to 110000	V	○	○	○
32783	800Fh	4	R/W	Primary voltage (L-N: phase voltage)	10 to 635000	×0.1V	△	△	○
32785	8011h	4	R/W	Secondary voltage	10 to 2200	×0.1V	○	○	○
32787	8013h	2	R/W	5A input change (Sensor type)	0: Direct, 2: 5A	-	○	○	○
32788	8014h	2	R/W	N/A	-	-	△	△	△
32789	8015h	2	R/W	N/A	-	-	※	△	△
32790	8016h	4	R/W	Primary current	50 to 300000	×0.1A	○	○	○
32792	8018h	4	R/W	N/A	-	-	△	△	△
32794	801Ah	4	R/W	N/A	-	-	※	△	△
32796	801Ch	2	R/W	Electric power demand time	0 to 1800	s	○	○	○
32797	801Dh	2	R/W	Current demand time	0 to 1800	s	○	○	○
32798	801Eh	2	R/W	N/A	-	-	△	△	△
32799	801Fh	2	R/W	N/A	-	-	△	△	△
32800	8020h	2	R/W	Electric power demand time(3side)	0 to 1800	s	○	△	△
32801	8021h	2	R/W	Current demand time	0 to 1800	s	○	△	△
32802	8022h	2	R/W	Cut-off rate of current	1 to 500	×0.1%	○	○	○
32803	8023h	2	R/W	N/A	1 to 500	×0.1%	△	△	△
32804	8024h	2	R/W	Cut-off rate of current(3side)	1 to 500	×0.1%	○	△	△
32805	8025h	2	R/W	N/A	-	-	△	△	△
32806	8026h	2	R/W	N/A	-	-	△	△	△
32807	8027h	2	R/W	External output method	0：non, 1：pulse output 2：alarm output	-	○	○	○
32808	8028h	2	R/W	External output target circuit	0:1 side ,1:3side		○	△	△
32809	8029h	2	R/W	Pulse output unit	Refer to 7.2.14	-	○	○	○
32810	802Ah	2	R/W	N/A	-	-	△	△	△
32811	802Bh	4	R/W	N/A	1 to 10000000	×0.001	△	△	△
32813	802Dh	2	R/W	Electric energy converted unit	Refer to 7.2.15 Unit of pulse converted and unit of electric energy converted	-	○	○	○
32814	802Eh	4	R/W	Electric energy converted rate	1 to 10000000	×0.001	○	○	○
32816	8030h	2	R/W	N/A	-	-	△	△	△
32817	8031h	4	R/W	N/A	-	-	△	△	△
32819	8033h	2	R/W	Electric energy converted unit(3side)	Refer to 7.2.15 Unit of pulse converted and unit of electric energy converted	-	○	△	△
32820	8034h	4	R/W	Electric energy converted rate(3side)	1 to 10000000	×0.001	○	△	△
32822	8036h	2	R/W	Measuring method of operating time	0:non,1:yes	-	○	○	○
32823	8037h	2	R/W	N/A	-	-	△	△	△
32824	8038h	2	R/W	N/A	-	-	△	△	△
32825	8039h	2	R/W	N/A	-	-	△	△	△

※This register is a system area. The read occasion and unsettled value, there is a possibility that I reply.

Register address		Number of byte	R/W	Register name	RANGE	Unit	Support			
							EMU4-A2/ EMU4-VA2			
Decimal	Hex						1P2W	1P3W	3P3W	3P4W
32826	803Ah	2	R/W	Measuring method of operating time(3side)	0:non,1:yes	-	○	△	△	△
32827	803Bh	2	R/W	N/A	-	-	△	△	△	△
32828	803Ch	2	R/W	Upper and lower limit alarm extence	0:OFF,1:ON	-	○	○	○	○
32829	803Dh	2	R/W	Upper and lower limit alarm method	-	-	○	○	○	○
32830	803Eh	4	R/W	Upper and lower limit alarm value	-	-	○	○	○	○
32832	8040h	2	R/W	N/A	-	-	△	△	△	△
32833	8041h	2	R/W	N/A	-	-	△	△	△	△
32834	8042h	4	R/W	N/A	-	-	△	△	△	△
32836	8044h	2	R/W	Upper and lower limit alarm extence(3side)	0:OFF,1:ON	-	○	△	△	△
32837	8045h	2	R/W	Upper and lower limit alarm method(3side)	-	-	○	△	△	△
32838	8046h	4	R/W	Upper and lower limit alarm value(3side)	-	-	○	△	△	△
32840	8048h	2	R/W	Alarm delay time	7.2.19 Setting for alarm mask	s	○	○	○	○
32841	8049h	2	R/W	Alarm reset method	1:Auto,2:Hold	-	○	○	○	○
32842	804Ah	2	R/W	N/A	-	-	△	△	△	△
32843	804Bh	2	R/W	N/A	-	-	△	△	△	△
32844	804Ch	2	R/W	Alarm delay time(3side)	Refer to 7.2.18 Setting for value of upper / lower alarm	s	○	△	△	△
32845	804Dh	2	R/W	Alarm reset method(3side)	1:Auto,2:Hold	-	○	△	△	△
32846	804Eh	2	R/W	MODBUS address (*1)	01h～FFh	-	○	○	○	○
32847	804Fh	2	R/W	MODBUS baudrate (*1)	Refer to 7.2.16 Communication setting data	bps	○	○	○	○
32848	8050h	2	R/W	MODBUS parity (*1)	Refer to 7.2.16 Communication setting data	-	○	○	○	○
32849	8051h	2	R/W	MODBUS stop bit (*1)	00h：1,01h：2	-	○	○	○	○
32850	8052h	2	R/W	Simple measuring setup	0:no,1:yes	-	○	○	○	○
32851	8053h	2	R/W	Power factor setup in simple measuring	-1 to +1000 to 0	×0.1%	○	○	○	○
32852	8054h	2	R/W	N/A	-	-	△	△	△	△
32853	8055h	2	R/W	Power factor setup in simple measuring(3side)	-1 to +1000 to 0	×0.1%	○	△	△	△
32854	8056h	2	R	16 bits monitor2	Refer to 7.2.9 16bit monitor2	-	○	○	○	○
32855	8057h	2	R/W	VT use or no-use	0:no,1:yes	-	○	△	○	○
32856	8058h	2	R/W	2 circuit measuring setteing	0:OFF,1:ON	-	○	△	△	△

Register address		Number of byte	R/W	Register name	RANGE	Unit	Support			
							EMU4-A2/ EMU4-VA2			
Decimal	Hex						1P2W	1P3W	3P3W	3P4W
32939	80ABh	2	R/W	Display mode (*2)	1：Wh+A+4elements 2：Harmonics	-	○	○	○	○
32940	80ACh	2	R/W	HA, HV value (*2) (*3)	1：RMS value 2：distortion rate and content rate	-	○	○	○	○
32941	80ADh	2	R/W	Element1(*2) (*4)	01h：None,02h：Voltage, 03h：Electric power, 04h：Reactive power, 05h：Power factor, 06h：Frequency, 07h：Harmonics current、 08h：Harmonics voltage、 09h：Reactive energy (consumption lag), 0Bh：Apparent power、 20h：Current unbalance rate, 21h：Voltage unbalance rate, 22h：Electric energy (converted) , 23h：Periodic electric energy, 24h：Operating time, 25h：Pulse count and pulse conveted value 26h：Electric energy (regeneration)	-	○	○	○	○
32942	80AEh	2	R/W	Element 2 (*2) (*4)		-	○	○	○	○
32943	80AFh	2	R/W	Element 3 (*2) (*4)		-	○	○	○	○
32944	80B0h	2	R/W	Element 4 (*2) (*4)		-	○	○	○	○

*1：When changing the MODBUS set value of the sub-unit, please make the main unit and the setting same.

*2：*2：These registers are supported from production in March 2019(F/W version is 1.01). These registers are not supported (×in upper table) for producted before February 2019(F/W version is 1.00).
Please refer to 6.3.8 of EMU4-D65 User's Manual (Details) to confirm the F/W version of Energy Measuring Unit.

*3：The setting HA,HV value is enable only when Display mode is set "Harmonics".

*4：The setting Elements are enable only when Display mode is "Wh+A+4elements".
If measurement items that can not be measured by the measuring unit are set, EMU4-D65 does not display the set item or measured value will be display as 0 in Operation mode.

(2) Instantaneous value monitor register

Register address		Number of byte	R/W	Register name	RANGE	Unit	Support		
							EMU4-A2/ EMU4-VA2		
Decimal	Hex						1P2W	1P3W 3P3W	3P4W
33024	8100h	2	R	Phase 1 current	0 to 32767	A	○	○	○
33025	8101h	2	R	Phase 2 current	0 to 32767	A	△	○	○
33026	8102h	2	R	Phase 3 current	0 to 32767	A	○	○	○
33027	8103h	2	R	Neutral current	0 to 32767	A	△	△	○
33028	8104h	2	R	Average value current	0 to 32767	A	○	○	○
33029	8105h	2	R	Phase 1 current demand	0 to 32767	A	○	○	○
33030	8106h	2	R	Phase 2 current demand	0 to 32767	A	△	○	○
33031	8107h	2	R	Phase 3 current demand	0 to 32767	A	○	○	○
33032	8108h	2	R	Neutral current demand	0 to 32767	A	△	△	○
33033	8109h	2	R	N/A	-	-	△	△	△
33034	810Ah	2	R	Voltage V12	0 to 32767	V	○	○	○
33035	810Bh	2	R	Voltage V23	0 to 32767	V	○	○	○
33036	810Ch	2	R	Voltage V31	0 to 32767	V	△	○	○
33037	810Dh	2	R	Average value voltage (L-L)	0 to 32767	V	○	○	○
33038	810Eh	2	R	Voltage V1N	0 to 32767	V	△	△	○
33039	810Fh	2	R	Voltage V2N	0 to 32767	V	△	△	○
33040	8110h	2	R	Voltage V3N	0 to 32767	V	△	△	○
33041	8111h	2	R	N/A	-	-	△	△	△
33042	8112h	2	R	Phase 1 power factor	-500 to +1000 to 500	×0.1%	○	△	△
33043	8113h	2	R	N/A	-500 to +1000 to 500	×0.1%	△	△	△
33044	8114h	2	R	Phase 3 power factor	-500 to +1000 to 500	×0.1%	○	△	△
33045	8115h	2	R	ΣPower factor	-500 to +1000 to 500	×0.1%	○※	○	○
33046	8116h	2	R	Frequency	445 to 999	×0.1Hz	○	○	○
33047	8117h	2	R	Phase 1 active power	-32767 to 32767	kW	○	△	△
33048	8118h	2	R	N/A	-	-	△	△	△
33049	8119h	2	R	Phase 3 active power	-32767 to 32767	kW	○	△	△
33050	811Ah	2	R	ΣActive power	-32767 to 32767	kW	○※	○	○
33051	811Bh	2	R	Phase 1 active power demand	-32767 to 32767	kW	○	△	△
33052	811Ch	2	R	N/A	-	-	△	△	△
33053	811Dh	2	R	Phase 3 active power demand	-32767 to 32767	kW	○	△	△
33054	811Eh	2	R	ΣActive power demand	-32767 to 32767	kW	○※	○	○
33055	811Fh	2	R	Phase 1 reactive power	-32767 to 32767	kvar	○	△	△
33056	8120h	2	R	N/A	-	-	△	△	△
33057	8121h	2	R	Phase 3 reactive power	-32767 to 32767	kvar	○	△	△
33058	8122h	2	R	ΣReactive power	-32767 to 32767	kvar	○※	○	○
33059	8123h	2	R	N/A	-	-	△	△	△
33060	8124h	2	R	N/A	-	-	△	△	△
33061	8125h	2	R	N/A	-	-	△	△	△
33062	8126h	2	R	ΣApparent power	-32767 to 32767	kVA	△	△	○

※When it's with 1P2W 2 circuit measurement, the reply value is the price of 1 side.

(3) Max value monitor register

Register address		Number of byte	R/W	Register name	RANGE	Unit	Support		
							EMU4-A2/ EMU4-VA2		
Decimal	Hex						1P2W	1P3W 3P3W	3P4W
33063	8127h	2	R	N/A	-	-	△	△	△
33064	8128h	2	R	N/A	-	-	△	△	△
33065	8129h	2	R	N/A	-	-	△	△	△
33066	812Ah	2	R	N/A	-	-	△	△	△
33067	812Bh	2	R	N/A	-	-	△	△	△
33068	812Ch	2	R	Phase 1 current demand max	0 to 32767	A	○	△	△
33069	812Dh	2	R	N/A	-	-	△	△	△
33070	812Eh	2	R	Phase 3 current demand max	0 to 32767	A	○	△	△
33071	812Fh	2	R	N/A	-	-	△	△	△
33072	8130h	2	R	N/A	-	-	△	△	△
33073	8131h	2	R	current demand max	0 to 32767	A	○	○	○
33074	8132h	2	R	Voltage V12 max	0 to 32767	V	○	△	△
33075	8133h	2	R	Voltage V23 max	0 to 32767	V	○	△	△
33076	8134h	2	R	N/A	-	-	△	△	△
33077	8135h	2	R	N/A	-	-	△	△	△
33078	8136h	2	R	Voltage (L-L) max	-	-	○	○	○
33079	8137h	2	R	N/A	-	-	△	△	△
33080	8138h	2	R	N/A	-	-	△	△	△
33081	8139h	2	R	N/A	-	-	△	△	△
33082	813Ah	2	R	N/A	-	-	△	△	△
33083	813Bh	2	R	Voltage (L-N) max	0 to 32767	V	△	△	○
33084	813Ch	2	R	Phase 1 power factor max	-500 to +1000 to 500	×0.1%	○	△	△
33085	813Dh	2	R	N/A	-	-	△	△	△
33086	813Eh	2	R	Phase 3 power factor max	-500 to +1000 to 500	×0.1%	○	△	△
33087	813Fh	2	R	Σpower factor max	-500 to +1000 to 500	×0.1%	○※	○	○
33088	8140h	2	R	N/A	-	-	△	△	△
33089	8141h	2	R	N/A	-	-	△	△	△
33090	8142h	2	R	N/A	-	-	△	△	△
33091	8143h	2	R	N/A	-	-	△	△	△
33092	8144h	2	R	N/A	-	-	△	△	△
33093	8145h	2	R	Phase 1 active power demand max	-32767 to 32767	kW	○	△	△
33094	8146h	2	R	N/A	-	-	△	△	△
33095	8147h	2	R	Phase 3 active power demand max	-32767 to 32767	kW	○	△	△
33096	8148h	2	R	Σactive power demand max	-32767 to 32767	kW	○※	○	○
33097	8149h	2	R	N/A	-	-	△	△	△
33098	814Ah	2	R	N/A	-	-	△	△	△
33099	814Bh	2	R	N/A	-	-	△	△	△
33100	814Ch	2	R	N/A	-	-	△	△	△
33101	814Dh	2	R	N/A	-	-	△	△	△
33102	814Eh	2	R	N/A	-	-	△	△	△
33103	814Fh	2	R	N/A	-	-	△	△	△
33104	8150h	2	R	N/A	-	-	△	△	△

※When it's with 1P2W 2 circuit measurement, the reply value is the price of 1 side.

(4) Min value monitor register

Register address		Number of byte	R/W	Register name	RANGE	Unit	Support		
							EMU4-A2/ EMU4-VA2		
Decimal	Hex						1P2W	1P3W 3P3W	3P4W
33105	8151h	2	R	N/A	-	-	△	△	△
33106	8152h	2	R	N/A	-	-	△	△	△
33107	8153h	2	R	N/A	-	-	△	△	△
33108	8154h	2	R	N/A	-	-	△	△	△
33109	8155h	2	R	N/A	-	-	△	△	△
33110	8156h	2	R	Phase 1 current demand min	0 to 32767	A	○	△	△
33111	8157h	2	R	N/A	-	-	△	△	△
33112	8158h	2	R	Phase 3 current demand min	0 to 32767	A	○	△	△
33113	8159h	2	R	N/A	-	-	△	△	△
33114	815Ah	2	R	N/A	-	-	△	△	△
33115	815Bh	2	R	Voltage V12 min	0 to 32767	V	○	△	△
33116	815Ch	2	R	Voltage V23 min	0 to 32767	V	○	△	△
33117	815Dh	2	R	N/A	-	-	△	△	△
33118	815Eh	2	R	N/A	-	-	△	△	△
33119	815Fh	2	R	N/A	-	-	△	△	△
33120	8160h	2	R	N/A	-	-	△	△	△
33121	8161h	2	R	N/A	-	-	△	△	△
33122	8162h	2	R	N/A	-	-	△	△	△
33123	8163h	2	R	Phase 1 power factor min	-500 to +1000 to 500	×0.1%	○	△	△
33124	8164h	2	R	N/A	-	-	△	△	△
33125	8165h	2	R	Phase 3 power factor min	-500 to +1000 to 500	×0.1%	○	△	△
33126	8166h	2	R	Σpower factor min	-500 to +1000 to 500	×0.1%	○※	○	○
33127	8167h	2	R	N/A	-	-	△	△	△
33128	8168h	2	R	N/A	-	-	△	△	△
33129	8169h	2	R	N/A	-	-	△	△	△
33130	816Ah	2	R	N/A	-	-	△	△	△
33131	816Bh	2	R	N/A	-	-	△	△	△
33132	816Ch	2	R	Phase 1 active power demand max	-32767 to 32767	kW	○	△	△
33133	816Dh	2	R	N/A	-	-	△	△	△
33134	816Eh	2	R	Phase 3 active power demand max	-32767 to 32767	kW	○	△	△
33135	816Fh	2	R	Σactive power demand max	-32767 to 32767	kW	○※	○	○
33136	8170h	2	R	N/A	-	-	△	△	△
33137	8171h	2	R	N/A	-	-	△	△	△
33138	8172h	2	R	N/A	-	-	△	△	△
33139	8173h	2	R	N/A	-	-	△	△	△
33140	8174h	2	R	N/A	-	-	△	△	△
33141	8175h	2	R	N/A	-	-	△	△	△
33142	8176h	2	R	N/A	-	-	△	△	△
33143	8177h	2	R	N/A	-	-	△	△	△
33144	8178h	4	R	Current unbalance rate	0 to 99999	×0.01%	△	○	○
33146	817Ah	4	R	Voltage unbalance rate	0 to 99999	×0.01%	△	○	○
33148	817Ch	2	R	Minimum phase current demand min	0 to 32767	A	○	○	○
33149	817Dh	2	R	Minimum voltage(L-L) min	0 to 32767	V	○	○	○
33150	817Eh	2	R	Minimum voltage(L-N) min	0 to 32767	V	△	△	○

※When it's with 1P2W 2 circuit measurement, the reply value is the price of 1 side.

(5) Electric energy and Reactive energy monitor register

Register address		Number of byte	R/W	Register name		RANGE	Unit	Support		
								EMU4-A2/ EMU4-VA2		
Decimal	Hex							1P2W	1P3W 3P3W	3P4W
33280	8200h	2	R	Integrated electric energy (Lower) (*1)	import	Less than 1000	kWh	○	○	○
33281	8201h	2	R	Integrated electric energy (Upper) (*1)		1000or more	kWh	○	○	○
33282	8202h	2	R	Integrated electric energy (Lower) (*1)	export	Less than 1000	kWh	○	○	○
33283	8203h	2	R	Integrated electric energy (Upper) (*1)		1000or more	kWh	○	○	○
33284	8204h	2	R	Reactive electric energy (Lower) (*1)	Import LAG	Less than 1000	kvarh	○	○	○
33285	8205h	2	R	Reactive electric energy (Upper) (*1)		1000or more	kvarh	○	○	○
33286	8206h	2	R	N/A		-	-	△	△	△
33287	8207h	2	R	N/A		-	-	△	△	△
33288	8208h	2	R	N/A		-	-	△	△	△
33289	8209h	2	R	N/A		-	-	△	△	△
33290	820Ah	2	R	N/A		-	-	△	△	△
33291	820Bh	2	R	N/A		-	-	△	△	△
33292	820Ch	2	R	N/A		-	-	△	△	△
33293	820Dh	2	R	N/A		-	-	△	△	△
33294	820Eh	2	R	N/A		-	-	△	△	△
33295	820Fh	2	R	N/A		-	-	△	△	△
33296	8210h	2	R	N/A		-	-	△	△	△
33297	8211h	2	R	N/A		-	-	△	△	△
33298	8212h	2	R	N/A		-	-	△	△	△
33299	8213h	2	R	N/A		-	-	△	△	△
33300	8214h	2	R	N/A		-	-	△	△	△
33301	8215h	2	R	N/A		-	-	△	△	△
33302	8216h	2	R	N/A		-	-	△	△	△
33303	8217h	2	R	N/A		-	-	△	△	△
33304	8218h	4	R/W	Integrated electric energy	import	0 to 999999	kWh	○	○	○
33306	821Ah	4	R/W	Integrated electric energy	export	0 to 999999	kWh	○	○	○
33308	821Ch	4	R/W	Reactive energy		0 to 999999	kvarh	○	○	○
33310	821Eh	4	R/W	N/A		-	-	△	△	△
33312	8220h	4	R/W	N/A		-	-	△	△	△
33314	8222h	4	R/W	N/A		-	-	△	△	△
33316	8224h	4	R	Integrated electric energy (extended)	import	0 to 999999	kWh	○	○	○
33318	8226h	4	R	Integrated electric energy (extended)	export	0 to 999999	kWh	○	○	○
33320	8228h	4	R	Reactive energy(extended)	import	0 to 999999	kvarh	○	○	○
33322	822Ah	4	R	N/A		-	-	×	×	×
33324	822Ch	4	R	N/A		-	-	×	×	×
33326	822Eh	4	R	N/A		-	-	×	×	×
33328	8230h	4	R/W	N/A		-	-	△	△	△
33330	8232h	4	R/W	N/A		-	-	△	△	△
33332	8234h	4	R	Operating time		0 to 999999	h	○	○	○
33334	8236h	2	R	N/A		-	-	△	△	△
33335	8237h	2	R	N/A		-	-	△	△	△
33336	8238h	2	R	N/A		-	-	△	△	△
33337	8239h	2	R	N/A		-	-	△	△	△
33338	823Ah	4	R/W	N/A		-	-	△	△	△
33340	823Ch	4	R/W	N/A		-	-	△	△	△
33342	823Eh	4	R	N/A		-	-	△	△	△
33344	8240h	4	R	N/A		-	-	△	△	△
33346	8242h	2	R	Integrated electric energy(3side) (Lower) (*1)	import	Less than 1000	kWh	○	△	△
33347	8243h	2	R	Integrated electric energy(3side) (Upper) (*1)		1000or more	kWh	○	△	△
33348	8244h	2	R	Integrated electric energy(3side) (Lower) (*1)	export	Less than 1000	kWh	○	△	△
33349	8245h	2	R	Integrated electric energy(3side) (Upper) (*1)		1000or more	kWh	○	△	△
33350	8246h	4	R/W	Integrated electric energy(3side)	import	0 to 999999	kWh	○	△	△

Register address		Number of byte	R/W	Register name		RANGE	Unit	Support		
								EMU4-A2/ EMU4-VA2		
Decimal	Hex							1P2W	1P3W 3P3W	3P4W
33352	8248h	4	R	Integrated electric energy(3side)	export	0 to 999999	kWh	○	△	△
33354	824Ah	4	R	Integrated electric energy(3side)(extended)	import	0 to 999999	kWh	○	△	△
33356	824Ch	4	R/W	Integrated electric energy(3side)(extended)	export	0 to 999999	kWh	○	△	△
33358	824Eh	4	R	N/A		-	-	△	△	△
33360	8250h	4	R/W	Operating time(3side)		0 to 999999	h	○	△	△
33362	8252h	4	R	N/A		-	-	△	△	△
33364	8254h	4	R	N/A		-	-	△	△	△
33366	8256h	4	R/W	Electric energy convertion		0 to 999999		○	○	○
33368	8258h	4	R	N/A		-	-	△	△	△
33370	825Ah	4	R/W	Electric energy convertion(3side)		0 to999999		○	△	△
33372	825Ch	4	R	N/A		-	-	△	△	△

*1:These 6-digit energy values are responded by dividing into upper and lower three digits.

<Example> In case of Integrated electric energy is 12345.6 kWh.(Full load power：120kW or more and less than 1200kW)

Register address		Response data (Decimal)
1280	0500h	456
1281	0501h	123
1304	0518h	123456

(6) Harmonics phase voltage instantaneous RMS monitor register

Register address		Number of byte	R/W	Register name		RANGE	Unit	Support		
								EMU4-A2/ EMU4-VA2		
Decimal	Hex							1P2W	1P3W 3P3W	3P4W
33536	8300h	2	R	Harmonics value V1N	Total	0 to 32767	V	△	△	○
33537	8301h	2	R	Harmonics value V2N	Total	0 to 32767	V	△	△	○
33538	8302h	2	R	Harmonics value V3N	Total	0 to 32767	V	△	△	○
33539	8303h	2	R	Harmonics value V1N	1st	0 to 32767	V	△	△	○
33540	8304h	2	R	Harmonics value V2N	1st	0 to 32767	V	△	△	○
33541	8305h	2	R	Harmonics value V3N	1st	0 to 32767	V	△	△	○
33542	8306h	2	R	Harmonics value V1N	3rd	0 to 32767	V	△	△	○
33543	8307h	2	R	Harmonics value V2N	3rd	0 to 32767	V	△	△	○
33544	8308h	2	R	Harmonics value V3N	3rd	0 to 32767	V	△	△	○
33545	8309h	2	R	Harmonics value V1N	5th	0 to 32767	V	△	△	○
33546	830Ah	2	R	Harmonics value V2N	5th	0 to 32767	V	△	△	○
33547	830Bh	2	R	Harmonics value V3N	5th	0 to 32767	V	△	△	○
33548	830Ch	2	R	Harmonics value V1N	7th	0 to 32767	V	△	△	○
33549	830Dh	2	R	Harmonics value V2N	7th	0 to 32767	V	△	△	○
33550	830Eh	2	R	Harmonics value V3N	7th	0 to 32767	V	△	△	○
33551	830Fh	2	R	Harmonics value V1N	9th	0 to 32767	V	△	△	○
33552	8310h	2	R	Harmonics value V2N	9th	0 to 32767	V	△	△	○
33553	8311h	2	R	Harmonics value V3N	9th	0 to 32767	V	△	△	○
33554	8312h	2	R	Harmonics value V1N	11th	0 to 32767	V	△	△	○
33555	8313h	2	R	Harmonics value V2N	11th	0 to 32767	V	△	△	○
33556	8314h	2	R	Harmonics value V3N	11th	0 to 32767	V	△	△	○
33557	8315h	2	R	Harmonics value V1N	13th	0 to 32767	V	△	△	○
33558	8316h	2	R	Harmonics value V2N	13th	0 to 32767	V	△	△	○
33559	8317h	2	R	Harmonics value V3N	13th	0 to 32767	V	△	△	○

(7) Harmonics line voltage instantaneous RMS monitor register

Register address		Number of byte	R/W	Register name		RANGE	Unit	Support		
								EMU4-A2/ EMU4-VA2		
Decimal	Hex							1P2W	1P3W 3P3W	3P4W
33664	8380h	2	R	Harmonics value V12	Total	0 to 32767	V	○	○	△
33665	8381h	2	R	Harmonics value V23	Total	0 to 32767	V	○	○	△
33666	8382h	2	R	N/A	N/A	−	−	△	△	△
33667	8383h	2	R	Harmonics value V12	1st	0 to 32767	V	○	○	△
33668	8384h	2	R	Harmonics value V23	1st	0 to 32767	V	○	○	△
33669	8385h	2	R	N/A	N/A	−	−	△	△	△
33670	8386h	2	R	Harmonics value V12	3rd	0 to 32767	V	○	○	△
33671	8387h	2	R	Harmonics value V23	3rd	0 to 32767	V	○	○	△
33672	8388h	2	R	N/A	N/A	−	−	△	△	△
33673	8389h	2	R	Harmonics value V12	5th	0 to 32767	V	○	○	△
33674	838Ah	2	R	Harmonics value V23	5th	0 to 32767	V	○	○	△
33675	838Bh	2	R	N/A	N/A	−	−	△	△	△
33676	838Ch	2	R	Harmonics value V12	7th	0 to 32767	V	○	○	△
33677	838Dh	2	R	Harmonics value V23	7th	0 to 32767	V	○	○	△
33678	838Eh	2	R	N/A	N/A	−	−	△	△	△
33679	838Fh	2	R	Harmonics value V12	9th	0 to 32767	V	○	○	△
33680	8390h	2	R	Harmonics value V23	9th	0 to 32767	V	○	○	△
33681	8391h	2	R	N/A	N/A	−	−	△	△	△
33682	8392h	2	R	Harmonics value V12	11th	0 to 32767	V	○	○	△
33683	8393h	2	R	Harmonics value V23	11th	0 to 32767	V	○	○	△
33684	8394h	2	R	N/A	N/A	−	−	△	△	△
33685	8395h	2	R	Harmonics value V12	13th	0 to 32767	V	○	○	△
33686	8396h	2	R	Harmonics value V23	13th	0 to 32767	V	○	○	△
33664	8380h	2	R	N/A	N/A	−	−	△	△	△

(8) Harmonics current instantaneous RMS monitor register

Register address		Number of byte	R/W	Register name		RANGE	Unit	Support		
								EMU4-A2/ EMU4-VA2		
Decimal	Hex							1P2W	1P3W 3P3W	3P4W
33792	8400h	2	R	Harmonics value I1	Total	0 to 32767	A	○	○	○
33793	8401h	2	R	Harmonics value I2	Total	0 to 32767	A	△	△	○
33794	8402h	2	R	Harmonics value I3	Total	0 to 32767	A	○	○	○
33795	8403h	2	R	Harmonics value IN	Total	0 to 32767	A	△	△	○
33796	8404h	2	R	Harmonics value I1	1st	0 to 32767	A	○	○	○
33797	8405h	2	R	Harmonics value I2	1st	0 to 32767	A	△	△	○
33798	8406h	2	R	Harmonics value I3	1st	0 to 32767	A	○	○	○
33799	8407h	2	R	Harmonics value IN	1st	0 to 32767	A	△	△	○
33800	8408h	2	R	Harmonics value I1	3rd	0 to 32767	A	○	○	○
33801	8409h	2	R	Harmonics value I2	3rd	0 to 32767	A	△	△	○
33802	840Ah	2	R	Harmonics value I3	3rd	0 to 32767	A	○	○	○
33803	840Bh	2	R	Harmonics value IN	3rd	0 to 32767	A	△	△	○
33804	840Ch	2	R	Harmonics value I1	5th	0 to 32767	A	○	○	○
33805	840Dh	2	R	Harmonics value I2	5th	0 to 32767	A	△	△	○
33806	840Eh	2	R	Harmonics value I3	5th	0 to 32767	A	○	○	○
33807	840Fh	2	R	Harmonics value IN	5th	0 to 32767	A	△	△	○
33808	8410h	2	R	Harmonics value I1	7th	0 to 32767	A	○	○	○
33809	8411h	2	R	Harmonics value I2	7th	0 to 32767	A	△	△	○
33810	8412h	2	R	Harmonics value I3	7th	0 to 32767	A	○	○	○
33811	8413h	2	R	Harmonics value IN	7th	0 to 32767	A	△	△	○
33812	8414h	2	R	Harmonics value I1	9th	0 to 32767	A	○	○	○
33813	8415h	2	R	Harmonics value I2	9th	0 to 32767	A	△	△	○
33814	8416h	2	R	Harmonics value I3	9th	0 to 32767	A	○	○	○
33815	8417h	2	R	Harmonics value IN	9th	0 to 32767	A	△	△	○
33816	8418h	2	R	Harmonics value I1	11th	0 to 32767	A	○	○	○
33817	8419h	2	R	Harmonics value I2	11th	0 to 32767	A	△	△	○
33818	841Ah	2	R	Harmonics value I3	11th	0 to 32767	A	○	○	○
33819	841Bh	2	R	Harmonics value IN	11th	0 to 32767	A	△	△	○
33820	841Ch	2	R	Harmonics value I1	13th	0 to 32767	A	○	○	○
33821	841Dh	2	R	Harmonics value I2	13th	0 to 32767	A	△	△	○
33822	841Eh	2	R	Harmonics value I3	13th	0 to 32767	A	○	○	○
33823	841Fh	2	R	Harmonics value IN	13th	0 to 32767	A	△	△	○

(9) Harmonics phase voltage instantaneous distortion monitor register

Register address		Register address	R/W	Register name		RANGE	Unit	Support		
								EMU4-A2/ EMU4-VA2		
Decimal	Hex							1P2W	1P3W 3P3W	3P4W
33920	8480h	2	R	THD V1N	Total	0 to 1000	×0.1%	△	△	○
33921	8481h	2	R	THD V2N	Total	0 to 1000	×0.1%	△	△	○
33922	8482h	2	R	THD V3N	Total	0 to 1000	×0.1%	△	△	○
33923	8483h	2	R	Harmonics ratio V1N	3rd	0 to 1000	×0.1%	△	△	○
33924	8484h	2	R	Harmonics ratio V2N	3rd	0 to 1000	×0.1%	△	△	○
33925	8485h	2	R	Harmonics ratio V3N	3rd	0 to 1000	×0.1%	△	△	○
33926	8486h	2	R	Harmonics ratio V1N	5th	0 to 1000	×0.1%	△	△	○
33927	8487h	2	R	Harmonics ratio V2N	5th	0 to 1000	×0.1%	△	△	○
33928	8488h	2	R	Harmonics ratio V3N	5th	0 to 1000	×0.1%	△	△	○
33929	8489h	2	R	Harmonics ratio V1N	7th	0 to 1000	×0.1%	△	△	○
33930	848Ah	2	R	Harmonics ratio V2N	7th	0 to 1000	×0.1%	△	△	○
33931	848Bh	2	R	Harmonics ratio V3N	7th	0 to 1000	×0.1%	△	△	○
33932	848Ch	2	R	Harmonics ratio V1N	9th	0 to 1000	×0.1%	△	△	○
33933	848Dh	2	R	Harmonics ratio V2N	9th	0 to 1000	×0.1%	△	△	○
33934	848Eh	2	R	Harmonics ratio V3N	9th	0 to 1000	×0.1%	△	△	○
33935	848Fh	2	R	Harmonics ratio V1N	11th	0 to 1000	×0.1%	△	△	○
33936	8490h	2	R	Harmonics ratio V2N	11th	0 to 1000	×0.1%	△	△	○
33937	8491h	2	R	Harmonics ratio V3N	11th	0 to 1000	×0.1%	△	△	○
33938	8492h	2	R	Harmonics ratio V1N	13th	0 to 1000	×0.1%	△	△	○
33939	8493h	2	R	Harmonics ratio V2N	13th	0 to 1000	×0.1%	△	△	○
33940	8494h	2	R	Harmonics ratio V3N	13th	0 to 1000	×0.1%	△	△	○

(10) Harmonics line voltage instantaneous distortion monitor register

Register address		Register address	R/W	Register name		RANGE	Unit	Support		
								EMU4-A2/ EMU4-VA2		
Decimal	Hex							1P2W	1P3W 3P3W	3P4W
34048	8500h	2	R	Harmonics value V12	Total	0 to 1000	×0.1%	○	○	△
34049	8501h	2	R	Harmonics value V23	Total	0 to 1000	×0.1%	○	○	△
34050	8502h	2	R	N/A	N/A	-	-	△	△	△
34051	8503h	2	R	Harmonics value V12	1st	0 to 1000	×0.1%	○	○	△
34052	8504h	2	R	Harmonics value V23	1st	0 to 1000	×0.1%	○	○	△
34053	8505h	2	R	N/A	N/A	-	-	△	△	△
34054	8506h	2	R	Harmonics value V12	3rd	0 to 1000	×0.1%	○	○	△
34055	8507h	2	R	Harmonics value V23	3rd	0 to 1000	×0.1%	○	○	△
34056	8508h	2	R	N/A	N/A	-	-	△	△	△
34057	8509h	2	R	Harmonics value V12	5th	0 to 1000	×0.1%	○	○	△
34058	850Ah	2	R	Harmonics value V23	5th	0 to 1000	×0.1%	○	○	△
34059	850Bh	2	R	N/A	N/A	-	-	△	△	△
34060	850Ch	2	R	Harmonics value V12	7th	0 to 1000	×0.1%	○	○	△
34061	850Dh	2	R	Harmonics value V23	7th	0 to 1000	×0.1%	○	○	△
34062	850Eh	2	R	N/A	N/A	-	-	△	△	△
34063	850Fh	2	R	Harmonics value V12	9th	0 to 1000	×0.1%	○	○	△
34064	8510h	2	R	Harmonics value V23	9th	0 to 1000	×0.1%	○	○	△
34065	8511h	2	R	N/A	N/A	-	-	△	△	△
34066	8512h	2	R	Harmonics value V12	11th	0 to 1000	×0.1%	○	○	△
34067	8513h	2	R	Harmonics value V23	11th	0 to 1000	×0.1%	○	○	△
34068	8514h	2	R	N/A	N/A	-	-	△	△	△

(11) Harmonics current instantaneous content rate monitor register

Register address		Register address	R/W	Register name		RANGE	Unit	Support		
								EMU4-A2/ EMU4-VA2		
Decimal	Hex							1P2W	1P3W 3P3W	3P4W
34176	8580h	2	R	Harmonics value I1	Total	0 to 1000	×0.1%	○	○	○
34177	8581h	2	R	Harmonics value I2	Total	0 to 1000	×0.1%	△	△	○
34178	8582h	2	R	Harmonics value I3	Total	0 to 1000	×0.1%	○	○	○
34179	8583h	2	R	Harmonics value IN	Total	0 to 1000	×0.1%	△	△	○
34180	8584h	2	R	Harmonics value I1	3rd	0 to 1000	×0.1%	○	○	○
34181	8585h	2	R	Harmonics value I2	3rd	0 to 1000	×0.1%	△	△	○
34182	8586h	2	R	Harmonics value I3	3rd	0 to 1000	×0.1%	○	○	○
34183	8587h	2	R	Harmonics value IN	3rd	0 to 1000	×0.1%	△	△	○
34184	8588h	2	R	Harmonics value I1	5th	0 to 1000	×0.1%	○	○	○
34185	8589h	2	R	Harmonics value I2	5th	0 to 1000	×0.1%	△	△	○
34186	858Ah	2	R	Harmonics value I3	5th	0 to 1000	×0.1%	○	○	○
34187	858Bh	2	R	Harmonics value IN	5th	0 to 1000	×0.1%	△	△	○
34188	858Ch	2	R	Harmonics value I1	7th	0 to 1000	×0.1%	○	○	○
34189	858Dh	2	R	Harmonics value I2	7th	0 to 1000	×0.1%	△	△	○
34190	858Eh	2	R	Harmonics value I3	7th	0 to 1000	×0.1%	○	○	○
34191	858Fh	2	R	Harmonics value IN	7th	0 to 1000	×0.1%	△	△	○
34192	8590h	2	R	Harmonics value I1	9th	0 to 1000	×0.1%	○	○	○
34193	8591h	2	R	Harmonics value I2	9th	0 to 1000	×0.1%	△	△	○
34194	8592h	2	R	Harmonics value I3	9th	0 to 1000	×0.1%	○	○	○
34195	8593h	2	R	Harmonics value IN	9th	0 to 1000	×0.1%	△	△	○
34196	8594h	2	R	Harmonics value I1	11th	0 to 1000	×0.1%	○	○	○
34197	8595h	2	R	Harmonics value I2	11th	0 to 1000	×0.1%	△	△	○
34198	8596h	2	R	Harmonics value I3	11th	0 to 1000	×0.1%	○	○	○
34199	8597h	2	R	Harmonics value IN	11th	0 to 1000	×0.1%	△	△	○
34200	8598h	2	R	Harmonics value I1	13th	0 to 1000	×0.1%	○	○	○
34201	8599h	2	R	Harmonics value I2	13th	0 to 1000	×0.1%	△	△	○
34202	859Ah	2	R	Harmonics value I3	13th	0 to 1000	×0.1%	○	○	○
34203	859Bh	2	R	Harmonics value IN	13th	0 to 1000	×0.1%	△	△	○

7.1.7 EcoMonitorPlus（EMU4-PX4/ EMU4-AX4）(For Circuit ID is 2)

(1) Setup register

Register address		Number of byte	R/W	Register name	RANGE	Unit	Support	
Decimal	Hex						EMU4-PX4	EMU4-AX4
32768	8000h	2	R	Model code	Refer to 7.2.13 Model code data	-	○	○
32769	8001h	2	R/W	16 bits Set/Reset register	Refer to 7.2.7 16bit set / reset register	-	○	○
32770	8002h	2	R	16 bits monitor	Refer to 7.2.8 16bit monitor	-	○	○
32807	8027h	2	R/W	External output method	0：non 2：alarm output 3：contact output	-	○	○
32808	8028h	2	R/W	External output target circuit	0：non 1：CH1 2：CH2 3：CH3 4：CH4	-	○	○
32809	8029h	2	R	N/A	-	-	△	×
32810	802Ah	2	R/W	Convert unit of pulse(CH1)	Refer to 7.2.15 Unit of pulse converted and unit of electric energy converted	-	○	×
32811	802Bh	4	R/W	Convert rate of pulse(CH1)	1 to 10000000	×0.001	○	×
32813	802Dh	2	R	N/A	-	-	△	×
32814	802Eh	4	R	N/A	-	-	△	×
32816	8030h	2	R	N/A	-	-	△	×
32817	8031h	4	R	N/A	-	-	△	×
32819	8033h	2	R	N/A	-	-	△	×
32820	8034h	4	R	N/A	-	-	△	×
32822	8036h	2	R/W	Measuring method of operating time(CH1)	0:non,1:yes	-	○	×
32823	8037h	2	R	N/A	-	-	△	×
32824	8038h	2	R/W	Measuring method of operating time(CH2)	0:non,1:yes	-	○	×
32825	8039h	2	R	N/A	-	-	△	×
32826	803Ah	2	R/W	Measuring method of operating time(CH3)	0:non,1:yes	-	○	×
32827	803Bh	2	R	N/A	-	-	△	×
32828	803Ch	2	R/W	Upper limit alarm existence(CH1)	0:OFF,1:ON	-	○	○
32829	803Dh	2	R	N/A	-	-	△	△
32830	803Eh	4	R/W	Upper limit alarm value（CH1）	Refer to 7.2.18 Setting for value of upper / lower alarm	-	○	○
32832	8040h	2	R/W	Upper limit alarm existence(CH2)	0:OFF,1:ON	-	○	○
32833	8041h	2	R	N/A	-	-	△	△
32834	8042h	4	R/W	Upper limit alarm value（CH2）	Refer to 7.2.18 Setting for value of upper / lower alarm	-	○	○
32836	8044h	2	R/W	Upper limit alarm existence(CH3)	0:OFF,1:ON	-	○	○
32837	8045h	2	R	N/A	-	-	△	△
32838	8046h	4	R/W	Upper limit alarm value（CH3）	Refer to 7.2.18 Setting for value of upper / lower alarm	-	○	○
32840	8048h	2	R/W	Alarm delay time(CH1)	Refer to 7.2.19 Setting for alarm mask	s	△	○
32841	8049h	2	R/W	Alarm reset method(CH1)	1:Auto,2:Hold	-	△	○
32842	804Ah	2	R/W	Alarm delay time(CH2)	Refer to 7.2.19 Setting for alarm mask	s	△	○
32843	804Bh	2	R/W	Alarm reset method(CH2)	1:Auto,2:Hold	-	△	○
32844	804Ch	2	R/W	Alarm delay time(CH3)	Refer to 7.2.19 Setting for alarm mask	s	△	○
32845	804Dh	2	R/W	Alarm reset method(CH3)	1:Auto,2:Hold	-	△	○
32846	804Eh	2	R/W	MODBUS address (*1)	01h～FFh	-	○	○
32847	804Fh	2	R/W	MODBUS baudrate (*1)	Refer to 7.2.16 Communication setting data	bps	○	○
32848	8050h	2	R/W	MODBUS parity (*1)	Refer to 7.2.16 Communication setting data	-	○	○
32849	8051h	2	R/W	MODBUS stop bit (*1)	00h：1,01h：2	-	○	○
32850	8052h	2	R	N/A	-	-	×	△
32851	8053h	2	R	N/A	-	-	×	△
32852	8054h	2	R	N/A	-	-	×	△
32853	8055h	2	R	N/A	-	-	×	△
32854	8056h	2	R	N/A	-	-	×	△
32855	8057h	2	R	N/A	-	-	×	△
32856	8058h	2	R	N/A	-	-	×	△
32857	8059h	2	R/W	Measuring interval	0：50ms,1：1ms	-	×	○
32858	805Ah	2	R/W	A/D conversion enable/disable setting(CH1)	0：disable 1：enable	-	×	○

Register address		Number of byte	R/W	Register name	RANGE	Unit	Support	
Decimal	Hex						EMU4-PX4	EMU4-AX4
32859	805Bh	2	R/W	Input range setting(CH1)	0:Voltage 1:Current	-	×	○
32860	805Ch	2	R/W	Scaling lower limit value(CH1)	-32767 to 32767	-	×	○
32861	805Dh	2	R/W	Scaling upper limit value(CH1)	-32767 to 32767	-	×	○
32862	805Eh	2	R/W	The scaling value unit(CH1)	Refer to 7.2.21 Setting for the scaling value unit	-	×	○
32863	805Fh	2	R/W	A/D conversion moving average(CH1)	1～100	-	×	○
32864	8060h	2	R/W	A/D conversion enable/disable setting(CH2)	0:disable 1:enable	-	×	○
32865	8061h	2	R/W	Input range setting(CH2)	0:Voltage 1:Current	-	×	○
32866	8062h	2	R/W	Scaling lower limit value(CH2)	-32767 to 32767	-	×	○
32867	8063h	2	R/W	Scaling upper limit value(CH2)	-32767 to 32767	-	×	○
32868	8064h	2	R/W	The scaling value unit(CH2)	Refer to 7.2.21 Setting for the scaling value unit	-	×	○
32869	8065h	2	R/W	A/D conversion moving average(CH2)	1～100	-	×	○
32870	8066h	2	R/W	A/D conversion enable/disable setting(CH3)	0:disable 1:enable	-	×	○
32871	8067h	2	R/W	Input range setting(CH3)	0:Voltage 1:Current	-	×	○
32872	8068h	2	R/W	Scaling lower limit value(CH3)	-32767 to 32767	-	×	○
32873	8069h	2	R/W	Scaling upper limit value(CH3)	-32767 to 32767	-	×	○
32874	806Ah	2	R/W	The scaling value unit(CH3)	Refer to 7.2.21 Setting for the scaling value unit	-	×	○
32875	806Bh	2	R/W	A/D conversion moving average(CH3)	1～100	-	×	○
32876	806Ch	2	R/W	A/D conversion enable/disable setting(CH4)	0:disable 1:enable	-	×	○
32877	806Dh	2	R/W	Input range setting(CH4)	0:Voltage 1:Current	-	×	○
32878	806Eh	2	R/W	Scaling lower limit value(CH4)	-32767 to 32767	-	×	○
32879	806Fh	2	R/W	Scaling upper limit value(CH4)	-32767 to 32767	-	×	○
32880	8070h	2	R/W	The scaling value unit(CH4)	Refer to 7.2.21 Setting for the scaling value unit	-	×	○
32881	8071h	2	R/W	A/D conversion moving average(CH4)	1～100	-	×	○
32882	8072h	2	R/W	Alarm delay time(CH4)	Refer to 7.2.19 Setting for alarm mask	-	×	○
32883	8073h	2	R/W	Alarm reset method(CH4)	1:Auto,2:Hold	-	×	○
32884	8074h	2	R/W	Lower limit alarm existence(CH1)	0:OFF,1:ON	-	×	○
32885	8075h	4	R/W	Lower limit alarm value(CH1)	Refer to 7.2.18 Setting for value of upper / lower alarm	-	×	○
32887	8077h	2	R/W	Lower limit alarm existence(CH2)	0:OFF,1:ON	-	×	○
32888	8078h	4	R/W	Lower limit alarm value(CH2)	Refer to 7.2.18 Setting for value of upper / lower alarm	-	×	○
32890	807Ah	2	R/W	Lower limit alarm existence(CH3)	0:OFF,1:ON	-	×	○
32891	807Bh	4	R/W	Lower limit alarm value(CH3)	Refer to 7.2.18 Setting for value of upper / lower alarm	-	×	○
32893	807Dh	2	R/W	Lower limit alarm existence(CH4)	0:OFF,1:ON	-	×	○
32894	807Eh	4	R/W	Lower limit alarm value(CH4)	Refer to 7.2.18 Setting for value of upper / lower alarm	-	×	○
32896	8080h	2	R/W	External output target alarm	0:Upper or lower limit 1:Upper limit 2:Lower limit	-	×	○
32897	8081h	2	R/W	Limit A setting(CH1)	Refer to 7.2.22 Setting for Limit setting	-	×	○
32898	8082h	2	R/W	Limit B setting(CH1)	Refer to 7.2.22 Setting for Limit setting	-	×	○
32899	8083h	2	R/W	Limit C setting(CH1)	Refer to 7.2.22 Setting for Limit setting	-	×	○
32900	8084h	2	R/W	Limit D setting(CH1)	Refer to 7.2.22 Setting for Limit setting	-	×	○
32901	8085h	2	R/W	Limit A setting(CH2)	Refer to 7.2.22 Setting for Limit setting	-	×	○
32902	8086h	2	R/W	Limit B setting(CH2)	Refer to 7.2.22 Setting for Limit setting	-	×	○
32903	8087h	2	R/W	Limit C setting(CH2)	Refer to 7.2.22 Setting for Limit setting	-	×	○
32904	8088h	2	R/W	Limit D setting(CH2)	Refer to 7.2.22 Setting for Limit setting	-	×	○
32905	8089h	2	R/W	Limit A setting(CH3)	Refer to 7.2.22 Setting for Limit setting	-	×	○
32906	808Ah	2	R/W	Limit B setting(CH3)	Refer to 7.2.22 Setting for Limit setting	-	×	○
32907	808Bh	2	R/W	Limit C setting(CH3)	Refer to 7.2.22 Setting for Limit setting	-	×	○
32908	808Ch	2	R/W	Limit D setting(CH3)	Refer to 7.2.22 Setting for Limit setting	-	×	○

Register address		Number of byte	R/W	Register name	RANGE	Unit	Support	
Decimal	Hex						EMU4-PX4	EMU4-AX4
32909	808Dh	2	R/W	Limit A setting(CH4)	Refer to 7.2.22 Setting for Limit setting	-	×	○
32910	808Eh	2	R/W	Limit B setting(CH4)	Refer to 7.2.22 Setting for Limit setting	-	×	○
32911	808Fh	2	R/W	Limit C setting(CH4)	Refer to 7.2.22 Setting for Limit setting	-	×	○
32912	8090h	2	R/W	Limit D setting(CH4)	Refer to 7.2.22 Setting for Limit setting	-	×	○
32913	8091h	2	R/W	Number over limit monitoring factor(CH1)	0:x1 1:x10 2:x100 3:x1000	-	×	○
32914	8092h	2	R/W	Number over limit monitoring factor(CH2)	0:x1 1:x10 2:x100 3:x1000	-	×	○
32915	8093h	2	R/W	Number over limit monitoring factor(CH3)	0:x1 1:x10 2:x100 3:x1000	-	×	○
32916	8094h	2	R/W	Number over limit monitoring factor(CH4)	0:x1 1:x10 2:x100 3:x1000	-	×	○
32917	8095h	2	R/W	Upper limit alarm existence(CH4)	0:OFF,1:ON	-	○	○
32918	8096h	4	R/W	Upper limit alarm value（CH4）	Refer to 7.2.18 Setting for value of upper / lower alarm	-	○	○
32920	8098h	2	R/W	External input method(CH1)	0:non 1:pulse input 2:Contact input	-	○	×
32921	8099h	2	R/W	External input method(CH2)	0:non 1:pulse input 2:Contact input	-	○	×
32922	809Ah	2	R/W	External input method(CH3)	0:non 1:pulse input 2:Contact input	-	○	×
32923	809Bh	2	R/W	External input method(CH4)	0:non 1:pulse input 2:Contact input	-	○	×
32924	809Ch	2	R/W	External input reset method(CH1)	1:Auto,2:Hold	-	○	×
32925	809Dh	2	R/W	External input reset method(CH2)	1:Auto,2:Hold	-	○	×
32926	809Eh	2	R/W	External input reset method(CH3)	1:Auto,2:Hold	-	○	×
32927	809Fh	2	R/W	External input reset method(CH4)	1:Auto,2:Hold	-	○	×
32928	80A0h	2	R/W	Convert unit of pulse(CH2)	Refer to 7.2.15 Unit of pulse converted and unit of electric energy converted	-	○	×
32929	80A1h	4	R/W	Convert rate of pulse(CH2)	1 to 10000000	×0.001	○	×
32931	80A3h	2	R/W	Convert unit of pulse(CH3)	Refer to 7.2.15 Unit of pulse converted and unit of electric energy converted	-	○	×
32932	80A4h	4	R/W	Convert rate of pulse(CH3)	1 to 10000000	×0.001	○	×
32934	80A6h	2	R/W	Convert unit of pulse(CH4)	Refer to 7.2.15 Unit of pulse converted and unit of electric energy converted	-	○	×
32935	80A7h	4	R/W	Convert rate of pulse(CH4)	1 to 10000000	×0.001	○	×
32937	80A9h	2	R/W	Measuring method of operating time(CH4)	0:non,1:yes	-	○	×

*1:When changing the MODBUS set value of the sub-unit, please make the main unit and the setting same.

(2) Instantaneous value / Maximum value / Minimum value monitor register

Register address		Number of byte	R/W	Register name	RANGE	Unit	Support	
Decimal	Hex						EMU4-PX4	EMU4-AX4
33151	817Fh	2	R	Contact input state (CH1)	0:OFF 1:ON	-	○	×
33152	8180h	2	R	Contact input state (CH2)	0:OFF 1:ON	-	○	×
33153	8181h	2	R	Contact input state (CH3)	0:OFF 1:ON	-	○	×
33154	8182h	2	R	Contact input state (CH4)	0:OFF 1:ON	-	○	×
33155	8183h	2	R	Analog value max(CH1)	0 to 4095	digit	×	○
33156	8184h	2	R	Analog value max(CH2)	0 to 4095	digit	×	○
33157	8185h	2	R	Analog value max(CH3)	0 to 4095	digit	×	○
33158	8186h	2	R	Analog value max(CH4)	0 to 4095	digit	×	○
33159	8187h	2	R	Scaling value max(CH1)	-32767 to 32767	-	×	○
33160	8188h	2	R	Scaling value max(CH2)	-32767 to 32767	-	×	○
33161	8189h	2	R	Scaling value max(CH3)	-32767 to 32767	-	×	○
33162	818Ah	2	R	Scaling value max(CH4)	-32767 to 32767	-	×	○
33163	818Bh	2	R	Analog value min(CH1)	0 to 4095	digit	×	○
33164	818Ch	2	R	Analog value min(CH2)	0 to 4095	digit	×	○
33165	818Dh	2	R	Analog value min(CH3)	0 to 4095	digit	×	○
33166	818Eh	2	R	Analog value min(CH4)	0 to 4095	digit	×	○
33167	818Fh	2	R	Scaling value min(CH1)	-32767 to 32767	-	×	○
33168	8190h	2	R	Scaling value min(CH2)	-32767 to 32767	-	×	○
33169	8191h	2	R	Scaling value min(CH3)	-32767 to 32767	-	×	○
33170	8192h	2	R	Scaling value min(CH4)	-32767 to 32767	-	×	○
33171	8193h	2	R	Analog value(CH1)	0 to 4095	digit	×	○
33172	8194h	2	R	Analog value(CH2)	0 to 4095	digit	×	○
33173	8195h	2	R	Analog value(CH3)	0 to 4095	digit	×	○
33174	8196h	2	R	Analog value(CH4)	0 to 4095	digit	×	○
33175	8197h	2	R	Scaling value(CH1)	-32767 to 32767	-	×	○
33176	8198h	2	R	Scaling value(CH2)	-32767 to 32767	-	×	○
33177	8199h	2	R	Scaling value(CH3)	-32767 to 32767	-	×	○
33178	819Ah	2	R	Scaling value(CH4)	-32767 to 32767	-	×	○

(3) Integrated value monitor register

Register address		Number of byte	R/W	Register name	RANGE	Unit	Support	
Decimal	Hex						EMU4-PX4	EMU4-AX4
33330	8232h	4	R/W	Pulse count(CH1)	0 to 999999	-	○	×
33332	8234h	4	R/W	Operating time(CH1)	0 to 999999	h	○	×
33358	824Eh	4	R/W	Operating time(CH2)	0 to 999999	h	○	×
33360	8250h	4	R/W	Operating time(CH3)	0 to 999999	h	○	×
33362	8252h	4	R	N/A	-	-	△	×
33364	8254h	4	R	N/A	-	-	△	×
33366	8256h	4	R	N/A	-	-	△	×
33368	8258h	4	R	N/A	-	-	△	×
33370	825Ah	4	R	N/A	-	-	△	×
33372	825Ch	4	R/W	Pluse convertion(CH1)	0 to 999999	-	○	×
33374	825Eh	4	R/W	Pulse count(CH2)	0 to 999999	-	○	×
33376	8260h	4	R/W	Pluse convertion(CH2)	0 to 999999	-	○	×
33378	8262h	4	R/W	Pulse count(CH3)	0 to 999999	-	○	×
33380	8264h	4	R/W	Pluse convertion(CH3)	0 to 999999	-	○	×
33382	8266h	4	R/W	Pulse count(CH4)	0 to 999999	-	○	×
33384	8268h	4	R/W	Pluse convertion(CH4)	0 to 999999	-	○	×
33386	826Ah	4	R/W	Operating time(CH4)	0 to 999999	h	○	×
33388	826Ch	4	R/W	Number over limit A(CH1)	0 to 999999	-	×	○
33390	826Eh	4	R/W	Number over limit B(CH1)	0 to 999999	-	×	○
33392	8270h	4	R/W	Number over limit C(CH1)	0 to 999999	-	×	○
33394	8272h	4	R/W	Number over limit D(CH1)	0 to 999999	-	×	○
33396	8274h	4	R/W	Number over limit A(CH2)	0 to 999999	-	×	○
33398	8276h	4	R/W	Number over limit B(CH2)	0 to 999999	-	×	○
33400	8278h	4	R/W	Number over limit C(CH2)	0 to 999999	-	×	○
33402	827Ah	4	R/W	Number over limit D(CH2)	0 to 999999	-	×	○
33404	827Ch	4	R/W	Number over limit A(CH3)	0 to 999999	-	×	○
33406	827Eh	4	R/W	Number over limit B(CH3)	0 to 999999	-	×	○
33408	8280h	4	R/W	Number over limit C(CH3)	0 to 999999	-	×	○
33410	8282h	4	R/W	Number over limit D(CH3)	0 to 999999	-	×	○
33412	8284h	4	R/W	Number over limit A(CH4)	0 to 999999	-	×	○
33414	8286h	4	R/W	Number over limit B(CH4)	0 to 999999	-	×	○
33416	8288h	4	R/W	Number over limit C(CH4)	0 to 999999	-	×	○
33418	828Ah	4	R/W	Number over limit D(CH4)	0 to 999999	-	×	○

(4) The scaling value continuous data monitor register.(Only EMU4-AX4.)

This register can monitor the scaling value which continued every measurement cycle.
Please refer to "7.4 About the scaling value continuous data register.

■ For CH1

Register address		Number of byte	R/W	Register name	RANGE	Unit	Support	
Decimal	Hex						EMU4-PX4	EMU4-AX4
33536	8300h	2	R	Cycle data (CH1)	0 to 65535 0：not measured yet. 1～65535：The cycle.	-	×	○
33537	8301h	2	R	Scaling value buffer 1 (CH1)	-32767 to 32767	-	×	○
33538	8302h	2	R	Scaling value buffer 2 (CH1)	-32767 to 32767	-	×	○
33539	8303h	2	R	Scaling value buffer 3 (CH1)	-32767 to 32767	-	×	○
33540	8304h	2	R	Scaling value buffer 4 (CH1)	-32767 to 32767	-	×	○
33541	8305h	2	R	Scaling value buffer 5 (CH1)	-32767 to 32767	-	×	○
33542	8306h	2	R	Scaling value buffer 6 (CH1)	-32767 to 32767	-	×	○
33543	8307h	2	R	Scaling value buffer 7 (CH1)	-32767 to 32767	-	×	○
33544	8308h	2	R	Scaling value buffer 8 (CH1)	-32767 to 32767	-	×	○
33545	8309h	2	R	Scaling value buffer 9 (CH1)	-32767 to 32767	-	×	○
33546	830Ah	2	R	Scaling value buffer 10 (CH1)	-32767 to 32767	-	×	○
33547	830Bh	2	R	Scaling value buffer 11 (CH1)	-32767 to 32767	-	×	○
33548	830Ch	2	R	Scaling value buffer 12 (CH1)	-32767 to 32767	-	×	○
33549	830Dh	2	R	Scaling value buffer 13 (CH1)	-32767 to 32767	-	×	○
33550	830Eh	2	R	Scaling value buffer 14 (CH1)	-32767 to 32767	-	×	○
33551	830Fh	2	R	Scaling value buffer 15 (CH1)	-32767 to 32767	-	×	○
33552	8310h	2	R	Scaling value buffer 16 (CH1)	-32767 to 32767	-	×	○
33553	8311h	2	R	Scaling value buffer 17 (CH1)	-32767 to 32767	-	×	○
33554	8312h	2	R	Scaling value buffer 18 (CH1)	-32767 to 32767	-	×	○
33555	8313h	2	R	Scaling value buffer 19 (CH1)	-32767 to 32767	-	×	○
33556	8314h	2	R	Scaling value buffer 20 (CH1)	-32767 to 32767	-	×	○
33557	8315h	2	R	Scaling value buffer 21 (CH1)	-32767 to 32767	-	×	○
33558	8316h	2	R	Scaling value buffer 22 (CH1)	-32767 to 32767	-	×	○
33559	8317h	2	R	Scaling value buffer 23 (CH1)	-32767 to 32767	-	×	○
33560	8318h	2	R	Scaling value buffer 24 (CH1)	-32767 to 32767	-	×	○
33561	8319h	2	R	Scaling value buffer 25 (CH1)	-32767 to 32767	-	×	○
33562	831Ah	2	R	Scaling value buffer 26 (CH1)	-32767 to 32767	-	×	○
33563	831Bh	2	R	Scaling value buffer 27 (CH1)	-32767 to 32767	-	×	○
33564	831Ch	2	R	Scaling value buffer 28 (CH1)	-32767 to 32767	-	×	○
33565	831Dh	2	R	Scaling value buffer 29 (CH1)	-32767 to 32767	-	×	○
33566	831Eh	2	R	Scaling value buffer 30 (CH1)	-32767 to 32767	-	×	○
33567	831Fh	2	R	Scaling value buffer 31 (CH1)	-32767 to 32767	-	×	○
33568	8320h	2	R	Scaling value buffer 32 (CH1)	-32767 to 32767	-	×	○
33569	8321h	2	R	Scaling value buffer 33 (CH1)	-32767 to 32767	-	×	○
33570	8322h	2	R	Scaling value buffer 34 (CH1)	-32767 to 32767	-	×	○
33571	8323h	2	R	Scaling value buffer 35 (CH1)	-32767 to 32767	-	×	○
33572	8324h	2	R	Scaling value buffer 36 (CH1)	-32767 to 32767	-	×	○
33573	8325h	2	R	Scaling value buffer 37 (CH1)	-32767 to 32767	-	×	○
33574	8326h	2	R	Scaling value buffer 38 (CH1)	-32767 to 32767	-	×	○
33575	8327h	2	R	Scaling value buffer 39 (CH1)	-32767 to 32767	-	×	○
33576	8328h	2	R	Scaling value buffer 40 (CH1)	-32767 to 32767	-	×	○
33577	8329h	2	R	Scaling value buffer 41 (CH1)	-32767 to 32767	-	×	○
33578	832Ah	2	R	Scaling value buffer 42 (CH1)	-32767 to 32767	-	×	○
33579	832Bh	2	R	Scaling value buffer 43 (CH1)	-32767 to 32767	-	×	○
33580	832Ch	2	R	Scaling value buffer 44 (CH1)	-32767 to 32767	-	×	○
33581	832Dh	2	R	Scaling value buffer 45 (CH1)	-32767 to 32767	-	×	○
33582	832Eh	2	R	Scaling value buffer 46 (CH1)	-32767 to 32767	-	×	○
33583	832Fh	2	R	Scaling value buffer 47 (CH1)	-32767 to 32767	-	×	○
33584	8330h	2	R	Scaling value buffer 48 (CH1)	-32767 to 32767	-	×	○
33585	8331h	2	R	Scaling value buffer 49 (CH1)	-32767 to 32767	-	×	○
33586	8332h	2	R	Scaling value buffer 50 (CH1)	-32767 to 32767	-	×	○

Register address		Number of byte	R/W	Register name	RANGE	Unit	Support	
Decimal	Hex						EMU4-PX4	EMU4-AX4
33587	8333h	2	R	Scaling value buffer 51 (CH1)	-32767 to 32767	-	×	○
33588	8334h	2	R	Scaling value buffer 52 (CH1)	-32767 to 32767	-	×	○
33589	8335h	2	R	Scaling value buffer 53 (CH1)	-32767 to 32767	-	×	○
33590	8336h	2	R	Scaling value buffer 54 (CH1)	-32767 to 32767	-	×	○
33591	8337h	2	R	Scaling value buffer 55 (CH1)	-32767 to 32767	-	×	○
33592	8338h	2	R	Scaling value buffer 56 (CH1)	-32767 to 32767	-	×	○
33593	8339h	2	R	Scaling value buffer 57 (CH1)	-32767 to 32767	-	×	○
33594	833Ah	2	R	Scaling value buffer 58 (CH1)	-32767 to 32767	-	×	○
33595	833Bh	2	R	Scaling value buffer 59 (CH1)	-32767 to 32767	-	×	○
33596	833Ch	2	R	Scaling value buffer 60 (CH1)	-32767 to 32767	-	×	○
33597	833Dh	2	R	Scaling value buffer 61 (CH1)	-32767 to 32767	-	×	○
33598	833Eh	2	R	Scaling value buffer 62 (CH1)	-32767 to 32767	-	×	○
33599	833Fh	2	R	Scaling value buffer 63 (CH1)	-32767 to 32767	-	×	○
33600	8340h	2	R	Scaling value buffer 64 (CH1)	-32767 to 32767	-	×	○
33601	8341h	2	R	Scaling value buffer 65 (CH1)	-32767 to 32767	-	×	○
33602	8342h	2	R	Scaling value buffer 66 (CH1)	-32767 to 32767	-	×	○
33603	8343h	2	R	Scaling value buffer 67 (CH1)	-32767 to 32767	-	×	○
33604	8344h	2	R	Scaling value buffer 68 (CH1)	-32767 to 32767	-	×	○
33605	8345h	2	R	Scaling value buffer 69 (CH1)	-32767 to 32767	-	×	○
33606	8346h	2	R	Scaling value buffer 70 (CH1)	-32767 to 32767	-	×	○
33607	8347h	2	R	Scaling value buffer 71 (CH1)	-32767 to 32767	-	×	○
33608	8348h	2	R	Scaling value buffer 72 (CH1)	-32767 to 32767	-	×	○
33609	8349h	2	R	Scaling value buffer 73 (CH1)	-32767 to 32767	-	×	○
33610	834Ah	2	R	Scaling value buffer 74 (CH1)	-32767 to 32767	-	×	○
33611	834Bh	2	R	Scaling value buffer 75 (CH1)	-32767 to 32767	-	×	○
33612	834Ch	2	R	Scaling value buffer 76 (CH1)	-32767 to 32767	-	×	○
33613	834Dh	2	R	Scaling value buffer 77 (CH1)	-32767 to 32767	-	×	○
33614	834Eh	2	R	Scaling value buffer 78 (CH1)	-32767 to 32767	-	×	○
33615	834Fh	2	R	Scaling value buffer 79 (CH1)	-32767 to 32767	-	×	○
33616	8350h	2	R	Scaling value buffer 80 (CH1)	-32767 to 32767	-	×	○
33617	8351h	2	R	Scaling value buffer 81 (CH1)	-32767 to 32767	-	×	○
33618	8352h	2	R	Scaling value buffer 82 (CH1)	-32767 to 32767	-	×	○
33619	8353h	2	R	Scaling value buffer 83 (CH1)	-32767 to 32767	-	×	○
33620	8354h	2	R	Scaling value buffer 84 (CH1)	-32767 to 32767	-	×	○
33621	8355h	2	R	Scaling value buffer 85 (CH1)	-32767 to 32767	-	×	○
33622	8356h	2	R	Scaling value buffer 86 (CH1)	-32767 to 32767	-	×	○
33623	8357h	2	R	Scaling value buffer 87 (CH1)	-32767 to 32767	-	×	○
33624	8358h	2	R	Scaling value buffer 88 (CH1)	-32767 to 32767	-	×	○
33625	8359h	2	R	Scaling value buffer 89 (CH1)	-32767 to 32767	-	×	○
33626	835Ah	2	R	Scaling value buffer 90 (CH1)	-32767 to 32767	-	×	○
33627	835Bh	2	R	Scaling value buffer 91 (CH1)	-32767 to 32767	-	×	○
33628	835Ch	2	R	Scaling value buffer 92 (CH1)	-32767 to 32767	-	×	○
33629	835Dh	2	R	Scaling value buffer 93 (CH1)	-32767 to 32767	-	×	○
33630	835Eh	2	R	Scaling value buffer 94 (CH1)	-32767 to 32767	-	×	○
33631	835Fh	2	R	Scaling value buffer 95 (CH1)	-32767 to 32767	-	×	○
33632	8360h	2	R	Scaling value buffer 96 (CH1)	-32767 to 32767	-	×	○
33633	8361h	2	R	Scaling value buffer 97 (CH1)	-32767 to 32767	-	×	○
33634	8362h	2	R	Scaling value buffer 98 (CH1)	-32767 to 32767	-	×	○
33635	8363h	2	R	Scaling value buffer 99 (CH1)	-32767 to 32767	-	×	○
33636	8364h	2	R	Scaling value buffer 100 (CH1)	-32767 to 32767	-	×	○

■ For CH2

Register address		Number of byte	R/W	Register name	RANGE	Unit	Support	
Decimal	Hex						EMU4-PX4	EMU4-AX4
33792	8400h	2	R	Cycle data (CH2)	0 to 65535 0：not measured yet. 1～65535：The cycle.	-	×	○
33793	8401h	2	R	Scaling value buffer 1 (CH2)	-32767 to 32767	-	×	○
33794	8402h	2	R	Scaling value buffer 2 (CH2)	-32767 to 32767	-	×	○
33795	8403h	2	R	Scaling value buffer 3 (CH2)	-32767 to 32767	-	×	○
33796	8404h	2	R	Scaling value buffer 4 (CH2)	-32767 to 32767	-	×	○
33797	8405h	2	R	Scaling value buffer 5 (CH2)	-32767 to 32767	-	×	○
33798	8406h	2	R	Scaling value buffer 6 (CH2)	-32767 to 32767	-	×	○
33799	8407h	2	R	Scaling value buffer 7 (CH2)	-32767 to 32767	-	×	○
33800	8408h	2	R	Scaling value buffer 8 (CH2)	-32767 to 32767	-	×	○
33801	8409h	2	R	Scaling value buffer 9 (CH2)	-32767 to 32767	-	×	○
33802	840Ah	2	R	Scaling value buffer 10 (CH2)	-32767 to 32767	-	×	○
33803	840Bh	2	R	Scaling value buffer 11 (CH2)	-32767 to 32767	-	×	○
33804	840Ch	2	R	Scaling value buffer 12 (CH2)	-32767 to 32767	-	×	○
33805	840Dh	2	R	Scaling value buffer 13 (CH2)	-32767 to 32767	-	×	○
33806	840Eh	2	R	Scaling value buffer 14 (CH2)	-32767 to 32767	-	×	○
33807	840Fh	2	R	Scaling value buffer 15 (CH2)	-32767 to 32767	-	×	○
33808	8410h	2	R	Scaling value buffer 16 (CH2)	-32767 to 32767	-	×	○
33809	8411h	2	R	Scaling value buffer 17 (CH2)	-32767 to 32767	-	×	○
33810	8412h	2	R	Scaling value buffer 18 (CH2)	-32767 to 32767	-	×	○
33811	8413h	2	R	Scaling value buffer 19 (CH2)	-32767 to 32767	-	×	○
33812	8414h	2	R	Scaling value buffer 20 (CH2)	-32767 to 32767	-	×	○
33813	8415h	2	R	Scaling value buffer 21 (CH2)	-32767 to 32767	-	×	○
33814	8416h	2	R	Scaling value buffer 22 (CH2)	-32767 to 32767	-	×	○
33815	8417h	2	R	Scaling value buffer 23 (CH2)	-32767 to 32767	-	×	○
33816	8418h	2	R	Scaling value buffer 24 (CH2)	-32767 to 32767	-	×	○
33817	8419h	2	R	Scaling value buffer 25 (CH2)	-32767 to 32767	-	×	○
33818	841Ah	2	R	Scaling value buffer 26 (CH2)	-32767 to 32767	-	×	○
33819	841Bh	2	R	Scaling value buffer 27 (CH2)	-32767 to 32767	-	×	○
33820	841Ch	2	R	Scaling value buffer 28 (CH2)	-32767 to 32767	-	×	○
33821	841Dh	2	R	Scaling value buffer 29 (CH2)	-32767 to 32767	-	×	○
33822	841Eh	2	R	Scaling value buffer 30 (CH2)	-32767 to 32767	-	×	○
33823	841Fh	2	R	Scaling value buffer 31 (CH2)	-32767 to 32767	-	×	○
33824	8420h	2	R	Scaling value buffer 32 (CH2)	-32767 to 32767	-	×	○
33825	8421h	2	R	Scaling value buffer 33 (CH2)	-32767 to 32767	-	×	○
33826	8422h	2	R	Scaling value buffer 34 (CH2)	-32767 to 32767	-	×	○
33827	8423h	2	R	Scaling value buffer 35 (CH2)	-32767 to 32767	-	×	○
33828	8424h	2	R	Scaling value buffer 36 (CH2)	-32767 to 32767	-	×	○
33829	8425h	2	R	Scaling value buffer 37 (CH2)	-32767 to 32767	-	×	○
33830	8426h	2	R	Scaling value buffer 38 (CH2)	-32767 to 32767	-	×	○
33831	8427h	2	R	Scaling value buffer 39 (CH2)	-32767 to 32767	-	×	○
33832	8428h	2	R	Scaling value buffer 40 (CH2)	-32767 to 32767	-	×	○
33833	8429h	2	R	Scaling value buffer 41 (CH2)	-32767 to 32767	-	×	○
33834	842Ah	2	R	Scaling value buffer 42 (CH2)	-32767 to 32767	-	×	○
33835	842Bh	2	R	Scaling value buffer 43 (CH2)	-32767 to 32767	-	×	○
33836	842Ch	2	R	Scaling value buffer 44 (CH2)	-32767 to 32767	-	×	○
33837	842Dh	2	R	Scaling value buffer 45 (CH2)	-32767 to 32767	-	×	○
33838	842Eh	2	R	Scaling value buffer 46 (CH2)	-32767 to 32767	-	×	○
33839	842Fh	2	R	Scaling value buffer 47 (CH2)	-32767 to 32767	-	×	○
33840	8430h	2	R	Scaling value buffer 48 (CH2)	-32767 to 32767	-	×	○
33841	8431h	2	R	Scaling value buffer 49 (CH2)	-32767 to 32767	-	×	○
33842	8432h	2	R	Scaling value buffer 50 (CH2)	-32767 to 32767	-	×	○
33843	8433h	2	R	Scaling value buffer 51 (CH2)	-32767 to 32767	-	×	○
33844	8434h	2	R	Scaling value buffer 52 (CH2)	-32767 to 32767	-	×	○
33845	8435h	2	R	Scaling value buffer 53 (CH2)	-32767 to 32767	-	×	○
33846	8436h	2	R	Scaling value buffer 54 (CH2)	-32767 to 32767	-	×	○
33847	8437h	2	R	Scaling value buffer 55 (CH2)	-32767 to 32767	-	×	○

Register address		Number of byte	R/W	Register name	RANGE	Unit	Support	
Decimal	Hex						EMU4-PX4	EMU4-AX4
33848	8438h	2	R	Scaling value buffer 56 (CH2)	-32767 to 32767	-	×	○
33849	8439h	2	R	Scaling value buffer 57 (CH2)	-32767 to 32767	-	×	○
33850	843Ah	2	R	Scaling value buffer 58 (CH2)	-32767 to 32767	-	×	○
33851	843Bh	2	R	Scaling value buffer 59 (CH2)	-32767 to 32767	-	×	○
33852	843Ch	2	R	Scaling value buffer 60 (CH2)	-32767 to 32767	-	×	○
33853	843Dh	2	R	Scaling value buffer 61 (CH2)	-32767 to 32767	-	×	○
33854	843Eh	2	R	Scaling value buffer 62 (CH2)	-32767 to 32767	-	×	○
33855	843Fh	2	R	Scaling value buffer 63 (CH2)	-32767 to 32767	-	×	○
33856	8440h	2	R	Scaling value buffer 64 (CH2)	-32767 to 32767	-	×	○
33857	8441h	2	R	Scaling value buffer 65 (CH2)	-32767 to 32767	-	×	○
33858	8442h	2	R	Scaling value buffer 66 (CH2)	-32767 to 32767	-	×	○
33859	8443h	2	R	Scaling value buffer 67 (CH2)	-32767 to 32767	-	×	○
33860	8444h	2	R	Scaling value buffer 68 (CH2)	-32767 to 32767	-	×	○
33861	8445h	2	R	Scaling value buffer 69 (CH2)	-32767 to 32767	-	×	○
33862	8446h	2	R	Scaling value buffer 70 (CH2)	-32767 to 32767	-	×	○
33863	8447h	2	R	Scaling value buffer 71 (CH2)	-32767 to 32767	-	×	○
33864	8448h	2	R	Scaling value buffer 72 (CH2)	-32767 to 32767	-	×	○
33865	8449h	2	R	Scaling value buffer 73 (CH2)	-32767 to 32767	-	×	○
33866	844Ah	2	R	Scaling value buffer 74 (CH2)	-32767 to 32767	-	×	○
33867	844Bh	2	R	Scaling value buffer 75 (CH2)	-32767 to 32767	-	×	○
33868	844Ch	2	R	Scaling value buffer 76 (CH2)	-32767 to 32767	-	×	○
33869	844Dh	2	R	Scaling value buffer 77 (CH2)	-32767 to 32767	-	×	○
33870	844Eh	2	R	Scaling value buffer 78 (CH2)	-32767 to 32767	-	×	○
33871	844Fh	2	R	Scaling value buffer 79 (CH2)	-32767 to 32767	-	×	○
33872	8450h	2	R	Scaling value buffer 80 (CH2)	-32767 to 32767	-	×	○
33873	8451h	2	R	Scaling value buffer 81 (CH2)	-32767 to 32767	-	×	○
33874	8452h	2	R	Scaling value buffer 82 (CH2)	-32767 to 32767	-	×	○
33875	8453h	2	R	Scaling value buffer 83 (CH2)	-32767 to 32767	-	×	○
33876	8454h	2	R	Scaling value buffer 84 (CH2)	-32767 to 32767	-	×	○
33877	8455h	2	R	Scaling value buffer 85 (CH2)	-32767 to 32767	-	×	○
33878	8456h	2	R	Scaling value buffer 86 (CH2)	-32767 to 32767	-	×	○
33879	8457h	2	R	Scaling value buffer 87 (CH2)	-32767 to 32767	-	×	○
33880	8458h	2	R	Scaling value buffer 88 (CH2)	-32767 to 32767	-	×	○
33881	8459h	2	R	Scaling value buffer 89 (CH2)	-32767 to 32767	-	×	○
33882	845Ah	2	R	Scaling value buffer 90 (CH2)	-32767 to 32767	-	×	○
33883	845Bh	2	R	Scaling value buffer 91 (CH2)	-32767 to 32767	-	×	○
33884	845Ch	2	R	Scaling value buffer 92 (CH2)	-32767 to 32767	-	×	○
33885	845Dh	2	R	Scaling value buffer 93 (CH2)	-32767 to 32767	-	×	○
33886	845Eh	2	R	Scaling value buffer 94 (CH2)	-32767 to 32767	-	×	○
33887	845Fh	2	R	Scaling value buffer 95 (CH2)	-32767 to 32767	-	×	○
33888	8460h	2	R	Scaling value buffer 96 (CH2)	-32767 to 32767	-	×	○
33889	8461h	2	R	Scaling value buffer 97 (CH2)	-32767 to 32767	-	×	○
33890	8462h	2	R	Scaling value buffer 98 (CH2)	-32767 to 32767	-	×	○
33891	8463h	2	R	Scaling value buffer 99 (CH2)	-32767 to 32767	-	×	○
33892	8464h	2	R	Scaling value buffer 100 (CH2)	-32767 to 32767	-	×	○

■ For CH3

Register address		Number of byte	R/W	Register name	RANGE	Unit	Support	
Decimal	Hex						EMU4-PX4	EMU4-AX4
34048	8500h	2	R	Cycle data (CH3)	0 to 65535 0：not measured yet. 1～65535：The cycle.	-	×	○
34049	8501h	2	R	Scaling value buffer 1 (CH3)	-32767 to 32767	-	×	○
34050	8502h	2	R	Scaling value buffer 2 (CH3)	-32767 to 32767	-	×	○
34051	8503h	2	R	Scaling value buffer 3 (CH3)	-32767 to 32767	-	×	○
34052	8504h	2	R	Scaling value buffer 4 (CH3)	-32767 to 32767	-	×	○
34053	8505h	2	R	Scaling value buffer 5 (CH3)	-32767 to 32767	-	×	○
34054	8506h	2	R	Scaling value buffer 6 (CH3)	-32767 to 32767	-	×	○
34055	8507h	2	R	Scaling value buffer 7 (CH3)	-32767 to 32767	-	×	○
34056	8508h	2	R	Scaling value buffer 8 (CH3)	-32767 to 32767	-	×	○
34057	8509h	2	R	Scaling value buffer 9 (CH3)	-32767 to 32767	-	×	○
34058	850Ah	2	R	Scaling value buffer 10 (CH3)	-32767 to 32767	-	×	○
34059	850Bh	2	R	Scaling value buffer 11 (CH3)	-32767 to 32767	-	×	○
34060	850Ch	2	R	Scaling value buffer 12 (CH3)	-32767 to 32767	-	×	○
34061	850Dh	2	R	Scaling value buffer 13 (CH3)	-32767 to 32767	-	×	○
34062	850Eh	2	R	Scaling value buffer 14 (CH3)	-32767 to 32767	-	×	○
34063	850Fh	2	R	Scaling value buffer 15 (CH3)	-32767 to 32767	-	×	○
34064	8510h	2	R	Scaling value buffer 16 (CH3)	-32767 to 32767	-	×	○
34065	8511h	2	R	Scaling value buffer 17 (CH3)	-32767 to 32767	-	×	○
34066	8512h	2	R	Scaling value buffer 18 (CH3)	-32767 to 32767	-	×	○
34067	8513h	2	R	Scaling value buffer 19 (CH3)	-32767 to 32767	-	×	○
34068	8514h	2	R	Scaling value buffer 20 (CH3)	-32767 to 32767	-	×	○
34069	8515h	2	R	Scaling value buffer 21 (CH3)	-32767 to 32767	-	×	○
34070	8516h	2	R	Scaling value buffer 22 (CH3)	-32767 to 32767	-	×	○
34071	8517h	2	R	Scaling value buffer 23 (CH3)	-32767 to 32767	-	×	○
34072	8518h	2	R	Scaling value buffer 24 (CH3)	-32767 to 32767	-	×	○
34073	8519h	2	R	Scaling value buffer 25 (CH3)	-32767 to 32767	-	×	○
34074	851Ah	2	R	Scaling value buffer 26 (CH3)	-32767 to 32767	-	×	○
34075	851Bh	2	R	Scaling value buffer 27 (CH3)	-32767 to 32767	-	×	○
34076	851Ch	2	R	Scaling value buffer 28 (CH3)	-32767 to 32767	-	×	○
34077	851Dh	2	R	Scaling value buffer 29 (CH3)	-32767 to 32767	-	×	○
34078	851Eh	2	R	Scaling value buffer 30 (CH3)	-32767 to 32767	-	×	○
34079	851Fh	2	R	Scaling value buffer 31 (CH3)	-32767 to 32767	-	×	○
34080	8520h	2	R	Scaling value buffer 32 (CH3)	-32767 to 32767	-	×	○
34081	8521h	2	R	Scaling value buffer 33 (CH3)	-32767 to 32767	-	×	○
34082	8522h	2	R	Scaling value buffer 34 (CH3)	-32767 to 32767	-	×	○
34083	8523h	2	R	Scaling value buffer 35 (CH3)	-32767 to 32767	-	×	○
34084	8524h	2	R	Scaling value buffer 36 (CH3)	-32767 to 32767	-	×	○
34085	8525h	2	R	Scaling value buffer 37 (CH3)	-32767 to 32767	-	×	○
34086	8526h	2	R	Scaling value buffer 38 (CH3)	-32767 to 32767	-	×	○
34087	8527h	2	R	Scaling value buffer 39 (CH3)	-32767 to 32767	-	×	○
34088	8528h	2	R	Scaling value buffer 40 (CH3)	-32767 to 32767	-	×	○
34089	8529h	2	R	Scaling value buffer 41 (CH3)	-32767 to 32767	-	×	○
34090	852Ah	2	R	Scaling value buffer 42 (CH3)	-32767 to 32767	-	×	○
34091	852Bh	2	R	Scaling value buffer 43 (CH3)	-32767 to 32767	-	×	○
34092	852Ch	2	R	Scaling value buffer 44 (CH3)	-32767 to 32767	-	×	○
34093	852Dh	2	R	Scaling value buffer 45 (CH3)	-32767 to 32767	-	×	○
34094	852Eh	2	R	Scaling value buffer 46 (CH3)	-32767 to 32767	-	×	○
34095	852Fh	2	R	Scaling value buffer 47 (CH3)	-32767 to 32767	-	×	○
34096	8530h	2	R	Scaling value buffer 48 (CH3)	-32767 to 32767	-	×	○
34097	8531h	2	R	Scaling value buffer 49 (CH3)	-32767 to 32767	-	×	○
34098	8532h	2	R	Scaling value buffer 50 (CH3)	-32767 to 32767	-	×	○
34099	8533h	2	R	Scaling value buffer 51 (CH3)	-32767 to 32767	-	×	○
34100	8534h	2	R	Scaling value buffer 52 (CH3)	-32767 to 32767	-	×	○
34101	8535h	2	R	Scaling value buffer 53 (CH3)	-32767 to 32767	-	×	○
34102	8536h	2	R	Scaling value buffer 54 (CH3)	-32767 to 32767	-	×	○

Register address		Number of byte	R/W	Register name	RANGE	Unit	Support	
Decimal	Hex						EMU4-PX4	EMU4-AX4
34103	8537h	2	R	Scaling value buffer 55 (CH3)	-32767 to 32767	-	×	○
34104	8538h	2	R	Scaling value buffer 56 (CH3)	-32767 to 32767	-	×	○
34105	8539h	2	R	Scaling value buffer 57 (CH3)	-32767 to 32767	-	×	○
34106	853Ah	2	R	Scaling value buffer 58 (CH3)	-32767 to 32767	-	×	○
34107	853Bh	2	R	Scaling value buffer 59 (CH3)	-32767 to 32767	-	×	○
34108	853Ch	2	R	Scaling value buffer 60 (CH3)	-32767 to 32767	-	×	○
34110	853Eh	2	R	Scaling value buffer 62 (CH3)	-32767 to 32767	-	×	○
34111	853Fh	2	R	Scaling value buffer 63 (CH3)	-32767 to 32767	-	×	○
34112	8540h	2	R	Scaling value buffer 64 (CH3)	-32767 to 32767	-	×	○
34113	8541h	2	R	Scaling value buffer 65 (CH3)	-32767 to 32767	-	×	○
34114	8542h	2	R	Scaling value buffer 66 (CH3)	-32767 to 32767	-	×	○
34115	8543h	2	R	Scaling value buffer 67 (CH3)	-32767 to 32767	-	×	○
34116	8544h	2	R	Scaling value buffer 68 (CH3)	-32767 to 32767	-	×	○
34117	8545h	2	R	Scaling value buffer 69 (CH3)	-32767 to 32767	-	×	○
34118	8546h	2	R	Scaling value buffer 70 (CH3)	-32767 to 32767	-	×	○
34119	8547h	2	R	Scaling value buffer 71 (CH3)	-32767 to 32767	-	×	○
34120	8548h	2	R	Scaling value buffer 72 (CH3)	-32767 to 32767	-	×	○
34121	8549h	2	R	Scaling value buffer 73 (CH3)	-32767 to 32767	-	×	○
34122	854Ah	2	R	Scaling value buffer 74 (CH3)	-32767 to 32767	-	×	○
34123	854Bh	2	R	Scaling value buffer 75 (CH3)	-32767 to 32767	-	×	○
34124	854Ch	2	R	Scaling value buffer 76 (CH3)	-32767 to 32767	-	×	○
34125	854Dh	2	R	Scaling value buffer 77 (CH3)	-32767 to 32767	-	×	○
34126	854Eh	2	R	Scaling value buffer 78 (CH3)	-32767 to 32767	-	×	○
34127	854Fh	2	R	Scaling value buffer 79 (CH3)	-32767 to 32767	-	×	○
34128	8550h	2	R	Scaling value buffer 80 (CH3)	-32767 to 32767	-	×	○
34129	8551h	2	R	Scaling value buffer 81 (CH3)	-32767 to 32767	-	×	○
34130	8552h	2	R	Scaling value buffer 82 (CH3)	-32767 to 32767	-	×	○
34131	8553h	2	R	Scaling value buffer 83 (CH3)	-32767 to 32767	-	×	○
34132	8554h	2	R	Scaling value buffer 84 (CH3)	-32767 to 32767	-	×	○
34133	8555h	2	R	Scaling value buffer 85 (CH3)	-32767 to 32767	-	×	○
34134	8556h	2	R	Scaling value buffer 86 (CH3)	-32767 to 32767	-	×	○
34135	8557h	2	R	Scaling value buffer 87 (CH3)	-32767 to 32767	-	×	○
34136	8558h	2	R	Scaling value buffer 88 (CH3)	-32767 to 32767	-	×	○
34137	8559h	2	R	Scaling value buffer 89 (CH3)	-32767 to 32767	-	×	○
34138	855Ah	2	R	Scaling value buffer 90 (CH3)	-32767 to 32767	-	×	○
34139	855Bh	2	R	Scaling value buffer 91 (CH3)	-32767 to 32767	-	×	○
34140	855Ch	2	R	Scaling value buffer 92 (CH3)	-32767 to 32767	-	×	○
34141	855Dh	2	R	Scaling value buffer 93 (CH3)	-32767 to 32767	-	×	○
34142	855Eh	2	R	Scaling value buffer 94 (CH3)	-32767 to 32767	-	×	○
34143	855Fh	2	R	Scaling value buffer 95 (CH3)	-32767 to 32767	-	×	○
34144	8560h	2	R	Scaling value buffer 96 (CH3)	-32767 to 32767	-	×	○
34145	8561h	2	R	Scaling value buffer 97 (CH3)	-32767 to 32767	-	×	○
34146	8562h	2	R	Scaling value buffer 98 (CH3)	-32767 to 32767	-	×	○
34147	8563h	2	R	Scaling value buffer 99 (CH3)	-32767 to 32767	-	×	○
34148	8564h	2	R	Scaling value buffer 100 (CH3)	-32767 to 32767	-	×	○

■ For CH4

Register address		Number of byte	R/W	Register name	RANGE	Unit	Support	
Decimal	Hex						EMU4-PX4	EMU4-AX4
34304	8600h	2	R	Cycle data (CH4)	0 to 65535 0：not measured yet. 1～65535：The cycle.	-	×	○
34305	8601h	2	R	Scaling value buffer 1 (CH4)	-32767 to 32767	-	×	○
34306	8602h	2	R	Scaling value buffer 2 (CH4)	-32767 to 32767	-	×	○
34307	8603h	2	R	Scaling value buffer 3 (CH4)	-32767 to 32767	-	×	○
34308	8604h	2	R	Scaling value buffer 4 (CH4)	-32767 to 32767	-	×	○
34309	8605h	2	R	Scaling value buffer 5 (CH4)	-32767 to 32767	-	×	○
34310	8606h	2	R	Scaling value buffer 6 (CH4)	-32767 to 32767	-	×	○
34311	8607h	2	R	Scaling value buffer 7 (CH4)	-32767 to 32767	-	×	○
34312	8608h	2	R	Scaling value buffer 8 (CH4)	-32767 to 32767	-	×	○
34313	8609h	2	R	Scaling value buffer 9 (CH4)	-32767 to 32767	-	×	○
34314	860Ah	2	R	Scaling value buffer 10 (CH4)	-32767 to 32767	-	×	○
34315	860Bh	2	R	Scaling value buffer 11 (CH4)	-32767 to 32767	-	×	○
34316	860Ch	2	R	Scaling value buffer 12 (CH4)	-32767 to 32767	-	×	○
34317	860Dh	2	R	Scaling value buffer 13 (CH4)	-32767 to 32767	-	×	○
34318	860Eh	2	R	Scaling value buffer 14 (CH4)	-32767 to 32767	-	×	○
34319	860Fh	2	R	Scaling value buffer 15 (CH4)	-32767 to 32767	-	×	○
34320	8610h	2	R	Scaling value buffer 16 (CH4)	-32767 to 32767	-	×	○
34321	8611h	2	R	Scaling value buffer 17 (CH4)	-32767 to 32767	-	×	○
34322	8612h	2	R	Scaling value buffer 18 (CH4)	-32767 to 32767	-	×	○
34323	8613h	2	R	Scaling value buffer 19 (CH4)	-32767 to 32767	-	×	○
34324	8614h	2	R	Scaling value buffer 20 (CH4)	-32767 to 32767	-	×	○
34325	8615h	2	R	Scaling value buffer 21 (CH4)	-32767 to 32767	-	×	○
34326	8616h	2	R	Scaling value buffer 22 (CH4)	-32767 to 32767	-	×	○
34327	8617h	2	R	Scaling value buffer 23 (CH4)	-32767 to 32767	-	×	○
34328	8618h	2	R	Scaling value buffer 24 (CH4)	-32767 to 32767	-	×	○
34329	8619h	2	R	Scaling value buffer 25 (CH4)	-32767 to 32767	-	×	○
34330	861Ah	2	R	Scaling value buffer 26 (CH4)	-32767 to 32767	-	×	○
34331	861Bh	2	R	Scaling value buffer 27 (CH4)	-32767 to 32767	-	×	○
34332	861Ch	2	R	Scaling value buffer 28 (CH4)	-32767 to 32767	-	×	○
34333	861Dh	2	R	Scaling value buffer 29 (CH4)	-32767 to 32767	-	×	○
34334	861Eh	2	R	Scaling value buffer 30 (CH4)	-32767 to 32767	-	×	○
34335	861Fh	2	R	Scaling value buffer 31 (CH4)	-32767 to 32767	-	×	○
34336	8620h	2	R	Scaling value buffer 32 (CH4)	-32767 to 32767	-	×	○
34337	8621h	2	R	Scaling value buffer 33 (CH4)	-32767 to 32767	-	×	○
34338	8622h	2	R	Scaling value buffer 34 (CH4)	-32767 to 32767	-	×	○
34339	8623h	2	R	Scaling value buffer 35 (CH4)	-32767 to 32767	-	×	○
34340	8624h	2	R	Scaling value buffer 36 (CH4)	-32767 to 32767	-	×	○
34341	8625h	2	R	Scaling value buffer 37 (CH4)	-32767 to 32767	-	×	○
34342	8626h	2	R	Scaling value buffer 38 (CH4)	-32767 to 32767	-	×	○
34343	8627h	2	R	Scaling value buffer 39 (CH4)	-32767 to 32767	-	×	○
34344	8628h	2	R	Scaling value buffer 40 (CH4)	-32767 to 32767	-	×	○
34345	8629h	2	R	Scaling value buffer 41 (CH4)	-32767 to 32767	-	×	○
34346	862Ah	2	R	Scaling value buffer 42 (CH4)	-32767 to 32767	-	×	○
34347	862Bh	2	R	Scaling value buffer 43 (CH4)	-32767 to 32767	-	×	○
34348	862Ch	2	R	Scaling value buffer 44 (CH4)	-32767 to 32767	-	×	○
34349	862Dh	2	R	Scaling value buffer 45 (CH4)	-32767 to 32767	-	×	○
34350	862Eh	2	R	Scaling value buffer 46 (CH4)	-32767 to 32767	-	×	○
34351	862Fh	2	R	Scaling value buffer 47 (CH4)	-32767 to 32767	-	×	○
34352	8630h	2	R	Scaling value buffer 48 (CH4)	-32767 to 32767	-	×	○
34353	8631h	2	R	Scaling value buffer 49 (CH4)	-32767 to 32767	-	×	○
34354	8632h	2	R	Scaling value buffer 50 (CH4)	-32767 to 32767	-	×	○
34355	8633h	2	R	Scaling value buffer 51 (CH4)	-32767 to 32767	-	×	○
34356	8634h	2	R	Scaling value buffer 52 (CH4)	-32767 to 32767	-	×	○
34357	8635h	2	R	Scaling value buffer 53 (CH4)	-32767 to 32767	-	×	○
34358	8636h	2	R	Scaling value buffer 54 (CH4)	-32767 to 32767	-	×	○
34359	8637h	2	R	Scaling value buffer 55 (CH4)	-32767 to 32767	-	×	○

Register address		Number of byte	R/W	Register name	RANGE	Unit	Support	
Decimal	Hex						EMU4-PX4	EMU4-AX4
34360	8638h	2	R	Scaling value buffer 56 (CH4)	-32767 to 32767	-	×	○
34361	8639h	2	R	Scaling value buffer 57 (CH4)	-32767 to 32767	-	×	○
34362	863Ah	2	R	Scaling value buffer 58 (CH4)	-32767 to 32767	-	×	○
34363	863Bh	2	R	Scaling value buffer 59 (CH4)	-32767 to 32767	-	×	○
34364	863Ch	2	R	Scaling value buffer 60 (CH4)	-32767 to 32767	-	×	○
34365	863Dh	2	R	Scaling value buffer 61 (CH4)	-32767 to 32767	-	×	○
34366	863Eh	2	R	Scaling value buffer 62 (CH4)	-32767 to 32767	-	×	○
34367	863Fh	2	R	Scaling value buffer 63 (CH4)	-32767 to 32767	-	×	○
34368	8640h	2	R	Scaling value buffer 64 (CH4)	-32767 to 32767	-	×	○
34369	8641h	2	R	Scaling value buffer 65 (CH4)	-32767 to 32767	-	×	○
34370	8642h	2	R	Scaling value buffer 66 (CH4)	-32767 to 32767	-	×	○
34371	8643h	2	R	Scaling value buffer 67 (CH4)	-32767 to 32767	-	×	○
34372	8644h	2	R	Scaling value buffer 68 (CH4)	-32767 to 32767	-	×	○
34373	8645h	2	R	Scaling value buffer 69 (CH4)	-32767 to 32767	-	×	○
34374	8646h	2	R	Scaling value buffer 70 (CH4)	-32767 to 32767	-	×	○
34375	8647h	2	R	Scaling value buffer 71 (CH4)	-32767 to 32767	-	×	○
34376	8648h	2	R	Scaling value buffer 72 (CH4)	-32767 to 32767	-	×	○
34377	8649h	2	R	Scaling value buffer 73 (CH4)	-32767 to 32767	-	×	○
34378	864Ah	2	R	Scaling value buffer 74 (CH4)	-32767 to 32767	-	×	○
34379	864Bh	2	R	Scaling value buffer 75 (CH4)	-32767 to 32767	-	×	○
34380	864Ch	2	R	Scaling value buffer 76 (CH4)	-32767 to 32767	-	×	○
34381	864Dh	2	R	Scaling value buffer 77 (CH4)	-32767 to 32767	-	×	○
34382	864Eh	2	R	Scaling value buffer 78 (CH4)	-32767 to 32767	-	×	○
34383	864Fh	2	R	Scaling value buffer 79 (CH4)	-32767 to 32767	-	×	○
34384	8650h	2	R	Scaling value buffer 80 (CH4)	-32767 to 32767	-	×	○
34385	8651h	2	R	Scaling value buffer 81 (CH4)	-32767 to 32767	-	×	○
34386	8652h	2	R	Scaling value buffer 82 (CH4)	-32767 to 32767	-	×	○
34387	8653h	2	R	Scaling value buffer 83 (CH4)	-32767 to 32767	-	×	○
34388	8654h	2	R	Scaling value buffer 84 (CH4)	-32767 to 32767	-	×	○
34389	8655h	2	R	Scaling value buffer 85 (CH4)	-32767 to 32767	-	×	○
34390	8656h	2	R	Scaling value buffer 86 (CH4)	-32767 to 32767	-	×	○
34391	8657h	2	R	Scaling value buffer 87 (CH4)	-32767 to 32767	-	×	○
34392	8658h	2	R	Scaling value buffer 88 (CH4)	-32767 to 32767	-	×	○
34393	8659h	2	R	Scaling value buffer 89 (CH4)	-32767 to 32767	-	×	○
34394	865Ah	2	R	Scaling value buffer 90 (CH4)	-32767 to 32767	-	×	○
34395	865Bh	2	R	Scaling value buffer 91 (CH4)	-32767 to 32767	-	×	○
34396	865Ch	2	R	Scaling value buffer 92 (CH4)	-32767 to 32767	-	×	○
34397	865Dh	2	R	Scaling value buffer 93 (CH4)	-32767 to 32767	-	×	○
34398	865Eh	2	R	Scaling value buffer 94 (CH4)	-32767 to 32767	-	×	○
34399	865Fh	2	R	Scaling value buffer 95 (CH4)	-32767 to 32767	-	×	○
34400	8660h	2	R	Scaling value buffer 96 (CH4)	-32767 to 32767	-	×	○
34401	8661h	2	R	Scaling value buffer 97 (CH4)	-32767 to 32767	-	×	○
34402	8662h	2	R	Scaling value buffer 98 (CH4)	-32767 to 32767	-	×	○
34403	8663h	2	R	Scaling value buffer 99 (CH4)	-32767 to 32767	-	×	○
34404	8664h	2	R	Scaling value buffer 100 (CH4)	-32767 to 32767	-	×	○

7.1.8 EcoMonitorPlus（EMU4-A2/ EMU4-VA2/ EMU4-PX4/ EMU4-AX4）(For circuit ID=3～ and circuit ID=7)

Register address range Hex	Register name	Note
8700h～8DFFh	(Same format 8000～86FFh)	Circuit ID＝3
8E00h～94FFh	(Same format 8000～86FFh)	Circuit ID＝4
9500h～9BFFh	(Same format 8000～86FFh)	Circuit ID＝5
9C00h～A2FFh	(Same format 8000～86FFh)	Circuit ID＝6
A300h～A9FFh	(Same format 8000～86FFh)	Circuit ID＝7

※Layout of register address of circuit ID 3-7 is same as circuit ID=2.
Register address of circuit ID3-7 will be the register address calculated as follows in register address of circuit ID2.
[+ N×700h (N = circuit ID -2)]

<Example> when register address of Integrated electric energy(import) of circuit ID 2-7 is asked.

Circuit ID＝2：8218h
Circuit ID＝3：8218h + (3-2)×700h = 8918h
Circuit ID＝4：8218h + (4-2)×700h = 9018h
Circuit ID＝5：8218h + (5-2)×700h = 9718h
Circuit ID＝6：8218h + (6-2)×700h = 9E18h
Circuit ID＝7：8218h + (7-2)×700h = A518h

※ The circuit ID changes with a combination of the number of addition units and the number of occupation circuit ID.
Please consult and check the below configuration example.

The circuit ID for each unit is decided by the summation of the number of possession circuit ID.

Unit type	Name	Model name	The number of possession circuit ID
Basic Unit	Energy Measuring Standard Model	EMU4-BM1-MB	1
	Energy Measuring High Performance Model	EMU4-HM1-MB	1
	Insulation Monitor Model	EMU4-LG1-MB	1
	Control Unit	EMU4-CNT-MB	1
Extension Unit	Energy Measuring Extension Unit for Same Voltage System	EMU4-A2	2
	Energy Measuring Extension Unit for Different Voltage System	EMU4-VA2	2
	Energy Measuring Extension Unit for Pulse Input	EMU4-PX4	1
	Energy Measuring Extension Unit for Analog Input	EMU4-AX4	1

< configuration example >

Unit type	Model name	The number of possession circuit ID
Option Unit	EMU4-LM	-
Basic Unit	EMU4-HM1-MB	1
Extension Unit The 1st	EMU4-VA2	2
Extension Unit The 2nd	EMU4-A2	2
Extension Unit The 3rd	EMU4-PX4	1

※ The basic unit and the extension unit by which a connection is possible are at most 3.

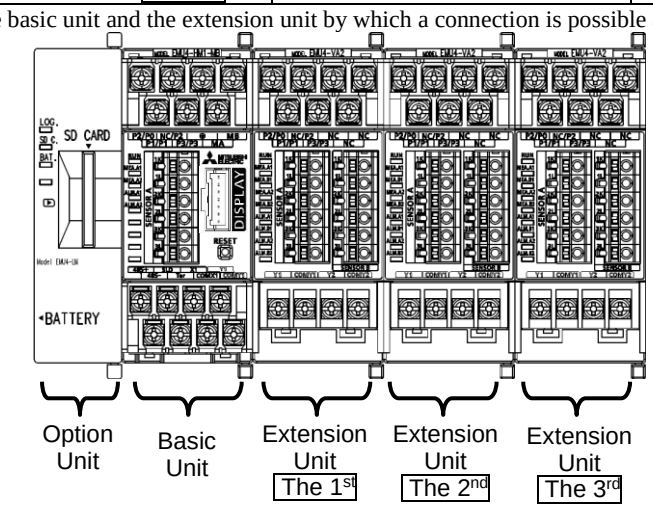

7.2 Specifications of Register Data

* Setup value is set in the circuit ID unit. Please setup data for 2 circuits when change the measuring units that have multiple circuits (Model: EMU4-A2, EMU4-VA2).
* If the setting data is 8000h (2-byte data) or 80000000h (4-byte data), the data in address concerned is not changed.
* Please take interval more than 5 seconds after change setting when monitoring (resetup) setup value.
If you setup or monitor (resetup) during this time, this unit response error or can't monitor correct values.

7.2.1 Specifications of Register Data

Phase wire system	Setting value	Applicable model
1P2W	0001h	EMU4-BD1-MB,EMU4-HD1-MB EMU4-BD1A-MB,EMU4-HD1A-MB EMU4-BM1-MB,EMU4-HM1-MB,EMU4-LG1-MB EMU4-A2, EMU4-VA2
1P3W	0002h	
3P3W/3P3W(2CT)	0003h	
3P4W	0004h	EMU4-HD1-MB,EMU4-HD1A-MB EMU4-HM1-MB,EMU4-LG1-MB,EMU4-A2, EMU4-VA2
3P3W(3CT)	0006h	EMU4-HD1A-MB

7.2.2 Setting data for primary voltage (line voltage)

The setting value is 4-byte data which the voltage value is converted into. (For example, "6600V" is converted into "6600(000019C8h)".)

(1) EcoMonitorLight(EMU4-BD1-MB/ EMU4-HD1-MB)

If the setting for phase wire system is 3P3W or 1P2W:

- For the setting range, refer to the users' manual.
- If the setting value is110V or 220V for EMU4-BD1-MB, or 110V, 220V or 440V for EMU4-HD1-MB:
  →The setting becomes "Direct (Without VT)", and received value of voltage is considered as the value of direct voltage.
- If the setting voltage is the value other than those above:
  →The setting becomes "With VT", and received primary voltage is set. In this case, the setting of secondary voltage is also necessary.
  →The upper three digits of primary voltage are configurable, and otherwise are rounded down.
  (If the primary voltage is lower than 100V, the upper two digits of it are configurable.)
- On the setting of 1P3W, 110V is only available.

If the setting for phase wire system is 3P4W:

- For the setting range, refer to the users' manual.
- If the setting value is 110V, 173V, 182V, 190V, 199V, 208V, 220V, 346V, 380V, 400V, 415V, 420V, 430V, 440V, 460V, 480V.
  →The setting becomes "Direct (Without VT)", and received value of voltage is considered as the value of direct voltage.
- If the setting voltage is the value other than those above:
  →The setting becomes "With VT", and received primary voltage is set. In this case, the setting of secondary voltage is also necessary.
  →The upper three digits of primary voltage are configurable, and otherwise are rounded down. (If the primary voltage is lower than 100V, the upper two digits of it are configurable.)

(2) EcoMonitorLight(EMU4-BD1A-MB/ EMU4-HD1A-MB)

If the setting for phase wire system is 3P3W or 1P2W:

- For the setting range, refer to the users' manual.
- If the setting value is110V or 220V for EMU4-BD1A-MB, or 110V, 220V or 440V for EMU4-HD1A-MB:
  →The setting becomes "Direct (Without VT)", and received value of voltage is considered as the value of direct voltage.
  →The upper three digits of primary voltage are configurable, and otherwise are rounded down. (If the primary voltage is lower than 100V, the upper two digits of it are configurable.)

If the setting for phase wire system is 1P3W:

- If the setting value is 110V or 220V for EMU4-BD1A-MB
- If the setting value is 110V, 220V for EMU4-HD1A-MB

If the setting for phase wire system is 3P4W:

- The upper three digits of primary voltage are configurable and round except the upper three digits.
  (If the primary voltage is lower than 100V, the upper two digits of it are configurable.)

(3) EcoMonitorPlus(EMU4-BM1-MB/ EMU4-HM1-MB/EMU4-A2/EMU4-VA2)

If the setting for phase wire system is 3P3W or 1P2W:

- For the setting range, refer to the users' manual.
- If the setting value is 110V or 220V for EMU4-BM1-MB.
- If the setting value is110V, 220V or 440V for EMU4-HM1-MB/ EMU4-A2/ EMU4-VA2:

  →The setting becomes "Direct (Without VT)", and received value of voltage is considered as the value of direct voltage.

  →The upper three digits of primary voltage are configurable, and otherwise are rounded down. (If the primary voltage is lower than 100V, the upper two digits of it are configurable.)

If the setting for phase wire system is 1P3W:

- If the setting value is 110V or 220V for EMU4-BM1-MB
- If the setting value is 110V, 220V or 440V for EMU4-HM1-MB/ EMU4-A2/ EMU4-VA2

If the setting for phase wire system is 3P4W:

- The upper three digits of primary voltage are configurable and round except the upper three digits.
  (If the primary voltage is lower than 100V, the upper two digits of it are configurable.)

7.2.3 Setting data for primary voltage (line voltage)

The setting value is 4-byte data which the tenfold voltage value is converted into. (For example, "63.5V" is converted into "635(0000027Bh)".)

(1) EcoMonitorLight(EMU4-BD1-MB/ EMU4-HD1-MB)

If the setting for phase wire system is 3P3W, 1P3W or 1P2W:

- For the setting range, refer to the users' manual.
- If the setting value is 63.5V, 100V, 105V, 110V, 115V, 120V, 127V, 220V, 230V, 240V, 242V, 250V, 254V, 265V, 277V.

  →The setting becomes "Direct (Without VT)", and received value of voltage is considered as the value of direct voltage.
- If the setting voltage is the value other than those above:

  →The setting becomes "With VT", and received primary voltage is set. In this case, the setting of secondary voltage is also necessary.

  →The upper three digits of primary voltage are configurable, and otherwise are rounded down. (If the primary voltage is lower than 100V, the upper two digits of it are configurable.)

(2) EcoMonitorLight(EMU4-BD1A-MB/ EMU4-HD1A-MB)

- If the setting for phase wire system is 3P3W, 1P3W or 1P2W:
  The setting is unavailable. (Set line voltage.)
- If the setting for phase wire system is 3P4W
  For the setting range, refer to the users' manual

(3) EcoMonitorPlus(EMU4-BM1-MB/ EMU4-HM1-MB/EMU4-A2/EMU4-VA2)

- If the setting for phase wire system is 3P3W, 1P3W or 1P2W:
  The setting is unavailable. (Set line voltage.)
- If the setting for phase wire system is 3P4W
  For the setting range, refer to the users' manual

7.2.4 Setting data for secondary voltage

The setting value is 4-byte data which the tenfold voltage value is converted into. (For example, “63.5V” is converted into “635(0000027Bh）”.)

- If the setting for phase wire system is 3P3W, 1P3W or 1P2W:
  For the setting range, refer to the users’ manual.(Setup the line voltage)
  If the primary voltage setting of the device is set to “Direct (Without VT)”, secondary voltage can be set. But the device operates in the setting of direct voltage (primary voltage).
- If the setting for phase wire system is 3P4W
  For the setting range, refer to the users’ manual.(Setup the phase voltage)

7.2.5 Setting data for primary current

The setting value is 4-byte data which the tenfold voltage value is converted into. (For example, “7.5A” is converted into “75(0000004Bh)”.)
For the setting range, refer to the users’ manual.(Setup the line voltage)

7.2.6 Setting data for alarm of demand current, alarm of electric power demand, alarm of leackage current.

The setting value is 2-byte data which the value is converted into in seconds unit. (For example, “7.5A” is converted into “75(0000004Bh)”.)
For the setting range, refer to the users’ manual.(Setup the line voltage)

7.2.7 16bit set / reset register

(1) EcoMonitorLight(EMU4-BD1-MB/ EMU4-HD1-MB),

EcoMonitorPlus(EMU4-BM1-MB/ EMU4-HM1-MB/ EMU4-LG1-MB /EMU4-A2/EMU4-VA2)

		Bit	Content	Value is "1"	Value is "0"	EMU4-BD1-MB	EMU4-HD1-MB	EMU4-BM1-MB	EMU4-HM1-MB	EMU4-LG1-MB	EMU4-A2 EMU4-VA2	Note
Set data	Data L	b0	Reset alarm	Clear it	Do not clear	—	○	○	○	○	○	
		b1	Clear integrated data	Clear it	Do not clear	○	○	○	○	—	○	Note1
		b2	Reset max and min value	Clear it	Do not clear	—	—	○	○	○	○	
		b3	Reset count of alarm	Clear it	Do not clear	—	—	—	—	○	—	
		b4	Not in use	—	—	—	—	—	—	—	—	
		b5	Not in use	—	—	—	—	—	—	—	—	
		b6	Not in use	—	—	—	—	—	—	—	—	
		b7	Not in use	—	—	—	—	—	—	—	—	
	Data H	b8	Clear contact input latch	Clear it	Do not clear	—	○	—	○	—	—	
		b9	Clear external input data	Clear it	Do not clear	○	○	○	○	—	○	Note2
		b10	Not in use	—	—	—	—	—	—	—	—	
		b11	Not in use	—	—	—	—	—	—	—	—	
		b12	Not in use	—	—	—	—	—	—	—	—	
		b13	Not in use	—	—	—	—	—	—	—	—	
		b14	Clear electric energy data	Clear it	Do not clear	○	○	○	○	—	○	
		b15	Not in use	—	—	—	—	—	—	—	—	

Note1: The integrated value is showed in beow differed by the models.

EMU4-BD1-MB, EMU4-BM1-MB: Electric Energy, Ractive power, Operating time

EMU4-HD1-MB: Electric Energy, Ractive power, Pluse count, Operating time, Periodic electric energy, CO_2 converted value

EMU4-BM1-MB: Electric Energy, Ractive power, Operating time

EMU4-HM1-MB: Electric Energy, Ractive power, Pluse count, Pluse convertion, Operating time, Periodic electric energy, Convereted electric energy

EMU4-A2, EMU4-VA2: Electric Energy, Ractive power, Operating time, Convereted electric energy

Note2: The items reset is showed in beow differed by the models.

EMU4-BD1-MB: Operating time

EMU4-HD1-MB: Pluse count, Operating time, Periodic electric energy, CO_2 converted value

EMU4-BM1-MB: Operating time

EMU4-HM1-MB: Pluse count, Pluse convertion, Operating time, Periodic electric energy, Convereted electric energy

EMU4-A2, EMU4-VA2: Operating time, Convereted electric energy

EcoMonitorLight(EMU4-BD1A-MB/ EMU4-HD1A-MB)

		Bit	Content	Value is "1"	Value is "0"	EMU4-BD1A-MB	EMU4-HD1A-MB	Note
Set data	Data L	b0	Reset alarm	Clear it	Do not clear	○	○	
		b1	Clear integrated data	Clear it	Do not clear	○	○	Note1
		b2	Reset max and min value	Clear it	Do not clear	○	○	Note2
		b3	Reset Number of band monitoring alarm occurrences/ Number of waveform data acquisition cycles	Clear it	Do not clear	—	○	
		b4	Alarm cumulative time reset	Clear it	Do not clear	○	○	
		b5	Contact output	Set	Reset	—	○	Note3
		b6	No in use	—	—	—	—	
		b7	No in use	—	—	—	—	
	Data H	b8	Clear contact input latch	Clear it	Do not clear	—	○	
		b9	Clear external input data	Clear it	Do not clear	○	○	Note4
		b10	Clear integrated data (1circuit)	Clear it	Do not clear	○	○	Note1 Note5
		b11	Clear integrated data (2circuit)	Clear it	Do not clear	○	○	Note 1 Note 5
		b12	Reset max and min value (1circuit)	Clear it	Do not clear	○	○	Note 1 Note 5
		b13	Reset max and min value (2circuit)	Clear it	Do not clear	○	○	Note 1 Note 5
		b14	Reset electrice energy/ reactive power(integrated data)	Clear it	Do not clear	○	○	
		b15	No in use	—	—	—	—	

Note1：The integrated value is showed in beow differed by the models.

EMU4-BD1A-MB：Electric Energy，Reactive energy，Operating time，Alarm cumulative time

EMU4-HD1A-MB：Electric Energy，Reactive energy，Periodic electric energy，Pluse count，Pluse convertion，Operating time，Convereted electric energy，Alarm cumulative time，Number of band monitoring alarm occurrences，Waveform data acquisition cycles

Note 2：The following maximum/minimum value data and the time of occurrence are reset (maximum value = current value, minimum value = current value).

current demand，Voltage，Electric power demand，power factor，Current unbalance rate，Voltage unbalance rate

Note 3：It's only when the external input method setting was set as "Contact output", to become effective

Note 4：The items reset is showed in below differed by the models.

EMU4-BD1A-MB：Operating time

EMU4-HD1A-MB：Pluse count,Pluse convertion,Operating time,Periodic electric energy,Convereted electric energy

Note 5：It is effective when 2 circuits measuring Setting.

(2) EcoMonitorPlus(EMU4-PX4 /EMU4-AX4)

		Bit	Content	Value is "1"	Value is "0"	EMU4-PX4	EMU4-AX4	Note
Set data	Data L	b0	Reset alarm	Clear it	Do not clear	○	○	
		b1	Clear integrated data	Clear it	Do not clear	○	—	Note1
		b2	Reset max and min value	Clear it	Do not clear	—	○	
		b3	Not in use	—	—	—	—	
		b4	All CH of number over limit A-D is reset.	Clear it	Do not clear	—	○	
		b5	Set of digital output	Set(Close)	Reset(Open)	○	○	Note3
		b6	Not in use	—	—	—	—	
		b7	Not in use	—	—	—	—	
	Data H	b8	Clear contact input latch	Clear it	Do not clear	○	—	
		b9	Clear external input data	Clear it	Do not clear	○	—	Note2
		b10	Not in use	—	—	—	—	
		b11	Not in use	—	—	—	—	
		b12	Not in use	—	—	—	—	
		b13	Not in use	—	—	—	—	
		b14	Not in use	—	—	—	—	
		b15	Not in use	—	—	—	—	

Note1 : The reset item is as follows.

Pluse count, Pluse convertion, Operating time

Note2 : The reset item is as follows.

Pluse count, Pluse convertion, Operating time

Note3 : It's only when the external output method setting was set as "Contact output", to become effective.

(3) EcoMonitorPlus(EMU4-CNT-MB)

		Bit	Content	Value is "1"	Value is "0"	EMU4-CNT-MB	Note
Set data	Data L	b0	CH1 contact output status	ON(Close)	OFF(Open)	○	
		b1	CH2 contact output status	ON(Close)	OFF(Open)	○	
		b2	CH3 contact output status	ON(Close)	OFF(Open)	○	
		b3	Not in use	–	–	—	
		b4	Not in use	–	–	—	
		b5	Not in use	–	–	—	
		b6	Not in use	–	–	—	
		b7	Not in use	–	–	—	
	Data H	b8	CH1 contact output request	Request	No request	○	Note1
		b9	CH2 contact output request	Request	No request	○	Note1
		b10	CH3 contact output request	Request	No request	○	Note1
		b11	Not in use	–	–	—	
		b12	Not in use	–	–	—	
		b13	Not in use	–	–	—	
		b14	Not in use	–	–	—	
		b15	Not in use	–	–	—	

Note1 : Only the requested CH are changed to the status specified by the contact output status(b0/b1/b2).

<Example> When changing CH1 from OFF to ON and CH2 and CH3 from ON to OFF.

b15 b12 b11 b8 b7 b4 b3 b0

0	0	0	0	0	1	1	1	0	0	0	0	0	0	0	1
0H				7H				0H				1H			

7.2.8 16bit monitor

(1) EcoMonitorLight(EMU4-BD1-MB/ EMU4-HD1-MB)

		Bit	Content	Value is "1"	Value is "0"	EMU4-BD1-MB	EMU4-HD1-MB	Note
Monitor data	Data L	b0	Upper limit alarm of pulse count	Alarm action	No alarm	−	○	Note1
		b1	Not in use	—	—	−	−	
		b2	Upper / lower limit alarm of current demand	Alarm action	No alarm	−	○	
		b3	Upper / lower limit alarm of electric power demand	Alarm action	No alarm	−	○	
		b4	Digital inputs	ON(Close)	OFF(Open)	−	○	Note2
		b5	Upper / lower limit batch alarm	Alarm action	No alarm	−	○	
		b6	Not in use	—	—	−	−	
		b7	Not in use	—	—	−	−	
	Data H	b8	Upper / lower limit alarm of voltage	Alarm action	No alarm	−	○	
		b9	Not in use	—	—	−	−	
		b10	Not in use	—	—	−	−	
		b11	Not in use	—	—	−	−	
		b12	Not in use	—	—	−	−	
		b13	Upper / lower limit alarm of power factor	Alarm action	No alarm	−	○	
		b14	Not in use	—	—	−	−	
		b15	Not in use	—	—	−	−	

Note1 : It's only when the external input method setting was set as "Pulse input", to become effective.

Note2 : It's only when the external input method setting was set as "Contact input", to become effective.

(2) EcoMonitorLight(EMU4-BD1A-MB/ EMU4-HD1A-MB)

		Bit	Content	Value is "1"	Value is "0"	EMU4-BD1A-MB	EMU4-HD1A-MB	Note
Monitor data	Data L	b0	Upper limit alarm of pluse convertion value	Alarm action	No alarm	−	○	Note 1 Note 2
		b1	Not in use	—	—	−	−	
		b2	Upper / lower limit alarm of current demand	Alarm action	No alarm	○	○	
		b3	Upper / lower limit alarm of electric power demand	Alarm action	No alarm	○	○	
		b4	Contact input	ON(Close)	OFF(Open)	−	○	Note 3
		b5	Upper / lower limit batch alarm	Alarm action	No alarm	○	○	
		b6	Upper / lower limit alarm of current unbalance rate	Alarm action	No alarm	○	○	
		b7	Upper / lower limit alarm of voltage unbalance rate	Alarm action	No alarm	○	○	
	Data H	b8	Upper / lower limit alarm of voltage	Alarm action	No alarm	○	○	Note 4
		b9	Not in use	—	—	−	−	
		b10	Not in use	—	—	−	−	
		b11	Not in use	—	—	−	−	
		b12	Not in use	—	—	−	−	
		b13	Upper / lower limit alarm of power factor	Alarm action	No alarm	○	○	
		b14	Band monitoring alarm status	Alarm action	No alarm	−	○	
		b15	Not in use	—	—	−	−	

Note1 : It's only when the external input method setting was set as "Pulse input", to become effective.
Note2 : It's possible to monitor by "16 bit monitor "or "16 bit monitor2".
Note3 : It's only when the external input method setting was set as "Contact input", to become effective.
Note4 : It's possible to monitor by "16 bit monitor "or "16 bit monitor2",when set to 1P2W(2 circuits measuring setting).

(3) EcoMonitorPlus(EMU4-BM1-MB/ EMU4-HM1-MB/ EMU4-A2/ EMU4-VA2)

		Bit	Content	Value is "1"	Value is "0"	EMU4-BM1-MB	EMU4-HM1-MB	EMU4-LG1-MB	EMU4-A2, EMU4-VA2	Note
Monitor data	Data L	b0	Upper limit alarm of pulse count	Alarm action	No alarm	—	○	—	—	Note1 Note3
		b1	Not in use	—	—	—	—	—	—	
		b2	Upper / lower limit alarm of current demand	Alarm action	No alarm	○	○	—	○	
		b3	Upper / lower limit alarm of electric power demand	Alarm action	No alarm	○	○	—	○	
		b4	Digital inputs	ON(Close)	OFF(Open)	—	○	—	—	Note2
		b5	Upper / lower limit batch alarm	Alarm action	No alarm	○	○	—	○	
		b6	Upper / lower limit alarm of current unbalance rate	Alarm action	No alarm	○	○	—	○	
		b7	Upper / lower limit alarm of voltage unbalance rate	Alarm action	No alarm	○	○	—	○	
	Data H	b8	Upper / lower limit alarm of voltage	Alarm action	No alarm	○	○	—	○	
		b9	1st alarm of leak current	Alarm action	No alarm	—	—	○	—	
		b10	2nd alarm of leak current	Alarm action	No alarm	—	—	○	—	
		b11	1st alarm of leak current for resistence	Alarm action	No alarm	—	—	○	—	
		b12	2nd alarm of leak current for resistence	Alarm action	No alarm	—	—	○	—	
		b13	Upper / lower limit alarm of power factor	Alarm action	No alarm	○	○	—	○	
		b14	Not in use	—	—	—	—	—	—	
		b15	Not in use	—	—	—	—	—	—	

Note1 : It's only when the external input method setting was set as "Pulse input", to become effective.

Note2 : It's only when the external input method setting was set as "Contact input", to become effective.

Note3 : It's possible to monitor by "16 bit monitor "or "16 bit monitor2".

(4) EcoMonitorPlus(EMU4-PX4/ EMU4-AX4)

		Bit	Content	Value is "1"	Value is "0"	EMU4-PX4	EMU4-AX4	Note
Monitor data	Data L	b0	Upper / lower limit alarm(CH1)	Alarm action	No alarm	○	○	Note1
		b1	Upper / lower limit alarm(CH2)	Alarm action	No alarm	○	○	Note1
		b2	Upper / lower limit alarm(CH3)	Alarm action	No alarm	○	○	Note1
		b3	Upper / lower limit alarm(CH4)	Alarm action	No alarm	○	○	Note1
		b4	Digital inputs(CH1)	ON(Close)	OFF(Open)	○	—	Note2
		b5	Upper / lower limit alarm(total)	Alarm action	No alarm	○	○	Note1 Note3
		b6	Digital inputs(CH2)	ON(Close)	OFF(Open)	○	—	Note2
		b7	Digital inputs(CH3)	ON(Close)	OFF(Open)	○	—	Note2
	Data H	b8	Digital inputs(CH4)	ON(Close)	OFF(Open)	○	—	Note2
		b9	Not in use	—	—	—	—	
		b10	Not in use	—	—	—	—	
		b11	Not in use	—	—	—	—	
		b12	Not in use	—	—	—	—	
		b13	Not in use	—	—	—	—	
		b14	Not in use	—	—	—	—	
		b15	Not in use	—	—	—	—	

Note1 : In case of EMU4-PX4, it'll be only the upper limit alarm.
Note2 : It's only when the external input method setting was set as "Contact input", to become effective.
Note3 : The alarm state of all CH is monitored.

(5) EcoMonitorPlus(EMU4-CNT-MB)

		Bit	Content	Value is "1"	Value is "0"	EMU4-CNT-MB	Note
Monitor data	Data L	b0	CH1 contact output status	ON(Close)	OFF(Open)	○	
		b1	CH2 contact output status	ON(Close)	OFF(Open)	○	
		b2	CH3 contact output status	ON(Close)	OFF(Open)	○	
		b3	Not in use	—	—	—	
		b4	Not in use	—	—	—	
		b5	Not in use	—	—	—	
		b6	Not in use	—	—	—	
		b7	Not in use	—	—	—	
	Data H	b8	Not in use	—	—	—	
		b9	Not in use	—	—	—	
		b10	Not in use	—	—	—	
		b11	Not in use	—	—	—	
		b12	Not in use	—	—	—	
		b13	Not in use	—	—	—	
		b14	Not in use	—	—	—	
		b15	Not in use	—	—	—	

7.2.9 16bit monitor2

(1) EcoMonitorLight(EMU4-BD1A-MB/ EMU4-HD1A-MB)

		Bit	Content	Value is "1"	Value is "0"	EMU4-BD1A-MB	EMU4-HD1A-MB	Note
Monitor data	Data L	b0	Upper limit alarm of pluse convertion value	Alarm action	No alarm	—	○	Note 1 Note 2
		b1	Not in use	—	—	—	—	
		b2	Upper / lower limit alarm of current demand (Second circuits in 1P2W)	Alarm action	No alarm	○	○	
		b3	Upper / lower limit alarm of electric power demand (Second circuits in 1P2W)	Alarm action	No alarm	○	○	
		b4	Not in use	—	—	—	—	
		b5	Upper / lower limit batch alarm (Second circuits in 1P2W)	Alarm action	No alarm	○	○	
		b6	Not in use	—	—	—	—	
		b7	Not in use	—	—	—	—	
	Data H	b8	Upper / lower limit alarm of voltage	Alarm action	No alarm	○	○	Note 3
		b9	Not in use	—	—	—	—	
		b10	Not in use	—	—	—	—	
		b11	Not in use	—	—	—	—	
		b12	Not in use	—	—	—	—	
		b13	Upper / lower limit alarm of power factor (Second circuits in 1P2W)	Alarm action	No alarm	○	○	
		b14	Not in use	—	—	—	—	
		b15	Not in use	—	—	—	—	

Note1 : It's only when the external input method setting was set as "Pulse input", to become effective.
Note2 : It's possible to monitor by "16 bit monitor "or "16 bit monitor2".
Note3 : It's possible to monitor by "16 bit monitor "or "16 bit monitor2",when set to 1P2W(2 circuits measuring Setting).

(2) EcoMonitorPlus(EMU4-BM1-MB/ EMU4-HM1-MB/ EMU4-LG1-MB/ EMU4-A2/ EMU4-VA2)

		Bit	Content	Value is "1"	Value is "0"	EMU4-BM1-MB	EMU4-HM1-MB	EMU4-LG1-MB	EMU4-A2 EMU4-VA2	Note
Monitor data	Data L	b0	Upper limit alarm of pulse count	Alarm action	No alarm	—	○	—	—	Note1 Note2
		b1	Not in use	—	—	—	—	—	—	
		b2	Upper / lower limit alarm of current demand (3 side in 1P2W)	Alarm action	No alarm	○	○	—	○	
		b3	Upper / lower limit alarm of electric power demand (3 side in 1P2W)	Alarm action	No alarm	○	○	—	○	
		b4	Not in use	—	—	—	—	—	—	
		b5	Upper / lower limit batch alarm (3 side in 1P2W)	Alarm action	No alarm	○	○	—	○	
		b6	Not in use	—	—	—	—	—	—	
		b7	Not in use	—	—	—	—	—	—	
	Data H	b8	Upper / lower limit alarm of voltage	Alarm action	No alarm	○	○	—	○	
		b9	Upper limit of leask current 1st alarm count	Alarm action	No alarm	—	—	○	—	
		b10	Upper limit of leask current 2nd alarm count	Alarm action	No alarm	—	—	○	—	
		b11	Upper limit of leask current for resistence 1st alarm count	Alarm action	No alarm	—	—	○	—	
		b12	Upper limit of leask current for resistence 2nd alarm count	Alarm action	No alarm	—	—	○	—	
		b13	Upper / lower limit alarm of power factor (3 side in 1P2W)	Alarm action	No alarm	○	○	—	○	
		b14	Not in use	—	—	—	—	—	—	
		b15	Not in use	—	—	—	—	—	—	

Note1 : It's only when the external input method setting was set as "Pulse input", to become effective.

Note2 : It's possible to monitor by "16 bit monitor "or "16 bit monitor2".

7.2.10 Setting data for sensor type

Sensor type	Value
Direct	0000h
5A	0002h

7.2.11 Method of measuring operating time

Measuring method of operating time	Setting value	Applicable model
By current	0001h	EMU4-BD1A-MB, EMU4-HD1-MB, EMU4-HD1A-MB, EMU4-HM1-MB
By contact	0002h	EMU4-HD1-MB, EMU4-HD1A-MB, EMU4-HM1-MB

7.2.12 Setting data for multiplying factor

This data indicates multiplying factor of current, voltage, electric power, electric energy, power factor, frequency, content rate of harmonic current, content rate of harmonic voltage, and detail electric energy (register address: 02F2H to 02FAH).
The value of the data is 2-byte value which the exponent of 10^n (i.e., “n”) is converted into.
The data of negative value is represented by two’s complement.
The true value is obtained by multiplying monitored data by “10^n”.

7.2.13 Model code data

Model code	Data
EMU4-BD1-MB/ EMU4-BD1A-MB	0001h
EMU4-HD1-MB/ EMU4-HD1A-MB	0002h
EMU4-BM1-MB	0003h
EMU4-HM1-MB	0004h
EMU4-A2	0005h
EMU4-VA2	0006h
EMU4-LG1-MB	0007h
EMU4-AX4	0009h
EMU4-PX4	000Ah
EMU4-CNT-MB	000Ch

7.2.14 Unit of pulse output

Setup range is changed by the total load electric power. For the setting range, refer to the users' manual.

Unit of pulse output	Data
0.001	0000h
0.01	0001h
0.1	0002h
1	0003h
10	0004h
100	0005h
1000	0006h
10000	0007h
100000	0008h

7.2.15 Unit of pulse converted and unit of electric energy converted

Unit of pulse converted Unit of electric energy converted	Data
Not in use	0000h
Wh	0001h
kWh	0002h
MWh	0003h
J	0004h
m^2	0005h
m^3	0006h
l	0007h
kl	0008h
sec	0009h
min	000Ah
hour	000Bh
piece	000Ch
set	000Dh
g	000Eh
kg	000Fh
t	0010h
\	0011h
$	0012h

7.2.16 Communication setting data

(1) Setting for MODBUS baudrate

MODBUS baudrate	Data
2400bps	0000h
4800bps	0001h
9600bps	0002h
19200bps	0003h
38400bps	0004h

(2) Setting for MODBUS parity

MODBUS parity	Data
NON	0000h
ODD	0001h
EVEN	0002h

7.2.17 Setting for items of upper / lower alarm

Items of upper/lower alrm	Data
Upper limit alarm of currnet demand	0000h
Lower limit alarm of current demand	0001h
Upper limit alarm of N phase current demand	0002h
Upper limit of line voltage	0003h
Lower limit of line voltage	0004h
Upper limit of phase voltage	0005h
Lower limit of phase voltage	0006h
Upper limit of electric power demand	0007h
Lower limit of electric power demand	0008h
Upper limit of power factor	0009h
Lower limit of power factor	000Ah
Upper limit of pulse converted	000Bh
Upper limit of current unbalance rate	000Ch
Upper limit of voltage unbalance rate	000Dh

7.2.18 Setting for value of upper / lower alarm

Setup range is differ by the target of monitoring
Upper / lower alarm value is setup not % value but value in below table.

Alarm items	Range of setting	Note
Upper limit current demand Upper limit N phase current demand	0～120% of primary current	
Lower limit alarm of current demand		
Upper limit of line voltage Upper limit of phase voltage	0～100% of primary current ×15/11	Note1
Lower limit of line voltage Lower limit of phase voltage		
Upper limit of electric power demand	-120～0～120% of Full load power	
Lower limit of electric power demand		
Upper limit of power factor	-5～100～5%	
Lower limit of power factor		
Upper limit of power factor	0.001～999999.000	
Lower limit of power factor	0.01～999.99	
Upper limit of power factor		
Upper limit of scaling value	-32767～32767	Note2
Lower limit of scaling value	-32767～32767	

Note 1 : The range is rounded off after the decimal point.
Note 2 : A setting possible area is scaling upper limit value from scaling lower limit value.

7.2.19 Setting for alarm mask

Alarm mask	Data
0sec	0000h
5sec	0001h
10sec	0002h
20sec	0003h
30sec	0004h
40sec	0005h
50sec	0006h
60sec	0007h
120sec	0008h
180sec	0009h
240sec	000Ah
300sec	000Bh

7.2.20 Setting for alarm of external output

Alarm of external output	Data
No in use	0000h
1st alarm of leak current	0001h
2nd alarm of leak current	0002h
1st alarm of leak current for resistence	0003h
2nd alarm of leak current for resistence	0004h
Upper limit of 1st alarm of leak current	0005h
Upper limit of 2nd alarm of leak current	0006h
Upper limit of 1st alarm of leak current for resistence	0007h
Upper limit of 2nd alarm of leak current for resistence	0008h

7.2.21 Setting for the scaling value unit

The scaling value unit	Data
non	0000h
A	0001h
mA	0002h
kA	0003h
V	0004h
kV	0005h
W	0006h
kW	0007h
MW	0008h
Hz	0009h
N	000Ah
kN	000Bh
Pa	000Ch
kPa	000Dh
MPa	000Eh
C	000Fh
deg	0010h
%	0011h

7.2.22 Setting for Limit setting

Limit setting	Data	Note
Limit A setting(CH1)	-32767～32767	Note1 Note2
Limit B setting(CH1)		
Limit C setting(CH1)		
Limit D setting(CH1)		
Limit A setting(CH2)		
Limit B setting(CH2)		
Limit C setting(CH2)		
Limit D setting(CH2)		
Limit A setting(CH3)		
Limit B setting(CH3)		
Limit C setting(CH3)		
Limit D setting(CH3)		
Limit A setting(CH4)		
Limit B setting(CH4)		
Limit C setting(CH4)		
Limit D setting(CH4)		

Note 1：A setting possible area is scaling upper limit value from scaling lower limit value.
Note 2：There are no restrictions in the reciprocal relation of the Limit A setting - Limit D setting.

7.2.23 Setting for option unit

Connection Optional Unit	Data
No in use	0000h
EMU4-CM-B（B/NET）	
EMU4-CM-C（CC-Link）	0001h
EMU4-CM-CIFB（CC-Link）	
EMU4-CM-MT（MT）	0003h
EMU4-LM（LM）	0009h

7.3 Multiplying factor of monitor data

True value is converted to the true value by multiplying multiplying factor by below table to the monitored data.

Data	Judgement data	Punctuation	Multiplying factor
Voltage Harmonic voltage RMS (EcoMonitorLight: EMU4-BD1-MB/EMU4-HD1-MB)	Primary voltage (*1)	Less than 300V	×0.1
		More than 300V	×1
Voltage Harmonic voltage RMS (EcoMonitorLight: EMU4-BD1A-MB/EMU4-HD1A-MB) (EcoMonitorPlus: EMU4-BM1-MB/EMU4-HM1-MB/ EMU4-A2/EMU4-VA2)	Primary voltage (*1)	Less than 300V	×0.1
		300V ~ 3000V	×1
		More than 3000V	×10
Current current demand Harmonic current RMS	Primary current	Less than 40A	×0.001
		40A ~ 400A	×0.01
		400A ~ 4000A	×0.1
		More than 4000A	×1
Electric power Electric power demand Reactive power	Full load power	Less than 12kW	×0.001
		12kW ~ 120kW	×0.01
		120kW ~ 1200kW	×0.1
		1200kW ~ 12000kW	×1
		12000kW ~ 120000kW	×10
		More than 120000kW	×100
Electric energy Reactive electric energy	Full load power	Less than 12kW	×0.01
		12kW ~ 120kW	×0.1
		120kW ~ 1200kW	×1
		1200kW ~ 12000kW	×10
		12000kW ~ 120000kW	×100
		More than 120000kW	×1000
Electric energy (extended) (*3) Reactive energy (extended) (*3)	Full load power	Less than 12kW	×0.00001
		12kW ~ 120kW	×0.0001
		120kW ~ 1200kW	×0.001
		1200kW ~ 12000kW	×0.01
		12000kW～120000kW	×0.1
		More than 120000kW	×1
Electric energy converted value	Full load power	Less than 12kW	×0.01
		12kW ~ 120kW	×0.1
		120kW ~ 1200kW	×1
		1200kW ~ 12000kW	×10
		12000kW ~ 120000kW	×100
		120000kW ~ 1200000kW	×1000
		More than 1200000kW	×10000
Pulse converted value	Pluse converted rate	0.001 ~ 0.01	×0.001
		0.01 ~ 0.1	×0.01
		0.1 ~ 1	×0.1
		1 ~ 10	×1
		10 ~ 100	×10
		100 ~ 1000	×100
		1000 ~ 10000	×1000
Leak current	Measurement mode	High SENS mode	×1
		Low SENS mode	×0.01
Power factor Frequency Content rate	—	—	×0.1(Hold)
Number over limit	Number over limit monitoring factor	Integer	×1
		Integer×10	×10
		Integer×100	×100
		Integer×1000	×1000
Analog output value	—	—	×0.001(Hold)

Data	Judgement data	Punctuation	Multiplying factor
Standard waveform, Standard deviation, Waveform data	Primary current	Less than 40A	×0.001
		40A ~ 400A	×0.01
		400A ~ 4000A	×0.1
		More than 4000A	×1
Alarm cumulative time	Multiplication factor of Alarm cumulative time	Integer	×1
		Integer×10	×10
		Integer×100	×100
		Integer×1000	×1000
Waveform band monitoring value	—	—	×0.1(Hold)

*1 Primary voltage is primary voltage (phase voltage) when wire phase system is 3P4W.
*2 Total electric power is calculated in below.

$$\text{Total electric power [kW]} = \frac{\alpha \times (\text{Primary voltage}) \times (\text{Primary current})}{1000}$$

"α" value is showed in below table.

Wire phase system	"α" value	Note
1P2W	α=1	
1P3W	α=2	Please setup the primary voltage is 110V(in 110/220V system) and 220V(in 110/220V system)
3P3W	α=1.732	
3P4W	α=3	Primary voltage is setup value of phase voltage

*3 Electric energy (extended) is the data of lower three digits more than electric energy data.

・The image of the electric energy (extended)
In the case measuring device has "12345.6789" as internal data.

Electric energy data："123456"

12345.6789

Electric energy(extended) data："456789"

7.4 About the scaling value continuous data register.

The monitor exclusive register of the scaling value who measured by Energy Measuring Extension Unit for Analog Input (EMU4-AX4).
The scaling value which continued every measurement cycle is stored in this register, so when you want to reproduce an analog input signal, it can be used.
Further when you want to monitor the present scaling value, the scaling value maximum or the scaling value minimum, it's possible to monitor by 74 pages of (2) Instantaneous value / Maximum value / Minimum value monitor register.

7.4.1 Relation between analog input signal and the scaling value continuous data register.

Relation between analog input signal and the scaling value continuous data register is as follows.
<Example> Measuring interval : 1ms, A/D conversion enable/disable setting (CH1) : enable,
A/D conversion enable/disable setting (CH2～CH4) : disable, Scaling upper limit value : 10000,
Scaling lower limit value : 0

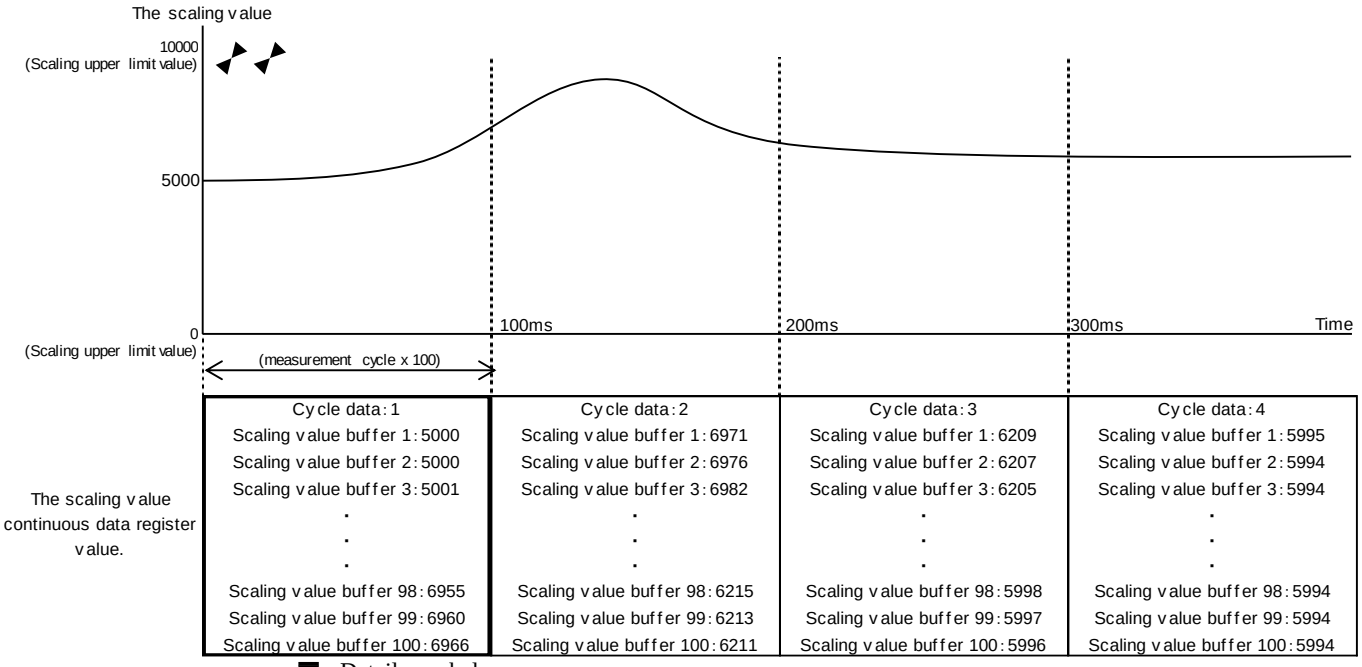

Details are below.

Register address		Number of byte	R/W	Register name	Data
Decimal	Hex				
33536	8300h	2	R	Cycle data (CH1)	1
33537	8301h	2	R	Scaling value buffer 1 (CH1)	5000
33538	8302h	2	R	Scaling value buffer 2 (CH1)	5000
33539	8303h	2	R	Scaling value buffer 3 (CH1)	5001
33540	8304h	2	R	Scaling value buffer 4 (CH1)	5001
33541	8305h	2	R	Scaling value buffer 5 (CH1)	5002
33542	8306h	2	R	Scaling value buffer 6 (CH1)	5003
33543	8307h	2	R	Scaling value buffer 7 (CH1)	5005
33544	8308h	2	R	Scaling value buffer 8 (CH1)	5007
…	…	…	R	…	…
33630	835Eh	2	R	Scaling value buffer 94 (CH1)	6937
33631	835Fh	2	R	Scaling value buffer 95 (CH1)	6941
33632	8360h	2	R	Scaling value buffer 96 (CH1)	6945
33633	8361h	2	R	Scaling value buffer 97 (CH1)	6950
33634	8362h	2	R	Scaling value buffer 98 (CH1)	6955
33635	8363h	2	R	Scaling value buffer 99 (CH1)	6960
33636	8364h	2	R	Scaling value buffer 100 (CH1)	6966

The scaling value every 1ms.
(In case of measurement cycle 1ms.)

Note1 : The scaling value every measurement cycle is stored in each register to "Scaling value buffer 1-100".
(The measurement cycle is "Measuring interval × number of A/D conversion enabled channels".
In case of the above example, it'll be 1ms.)
Note2 : Data update renews "Scaling value buffer 1-100" simultaneously.
Note3 : When renewing "Scaling value buffer 1-100" simultaneously, "Cycle data" adds 1.
Note4 : Cycle data is 0-65535. When this upper limit is exceeded, return to 1.
"0" shows the state by which an A/D conversion is less than 100 times.

7.4.2 About a reading way of the scaling value continuous data register.

It's necessary to monitor 101 registers (202byte) by lumping. Only 1 register can't be monitored.
And,it's a dedicated register every CH. For details, please refer to 55 pages of (4) The scaling value continuous data monitor register.(Only EMU4-AX4.)
The timing by which data of "Scaling value buffer 1-100" is renewed is "Measurement cycle" × 100.
Therefore when you'd like to monitor data without a loss, before being renewed, it's necessary to monitor.
Total time to read 101 registers of the scaling value continuous data register is about 80ms. For details, please refer to 4.3 Transmission timing.
Therefore it's necessary to do a monitor request of the next cycle within the 20ms to monitor data without a loss in measurement cycle 1ms.

<Example> Measuring interval：1ms，A/D conversion enable/disable setting (CH1)：enable，
A/D conversion enable/disable setting (CH2～CH4)：disable，Scaling upper limit value：10000，Scaling lower limit value：0

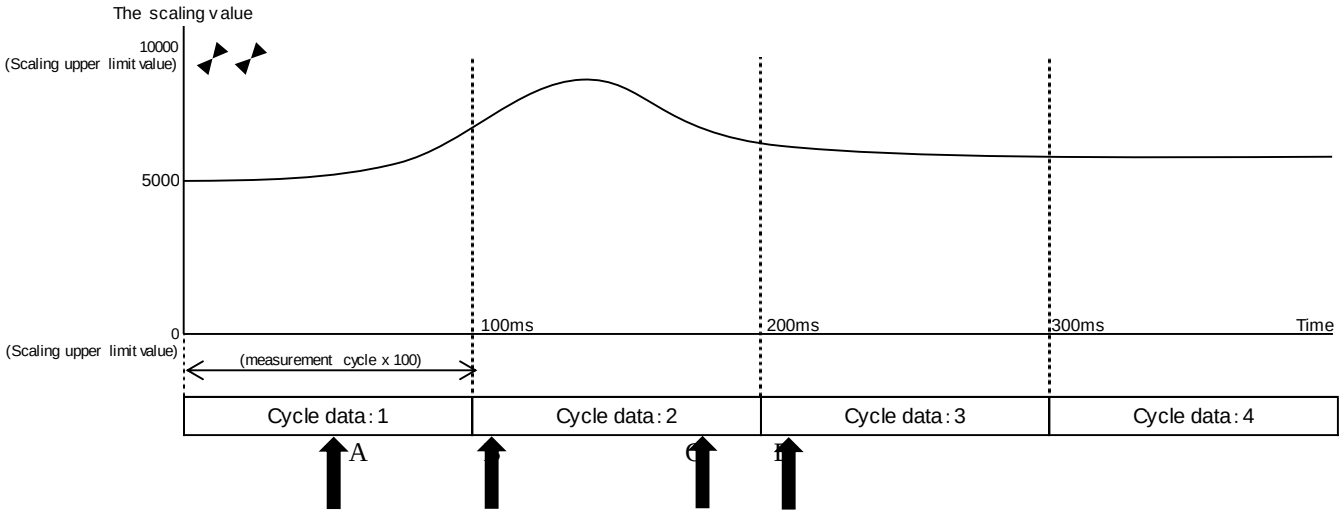

Note1：When monitoring by timing of "A", an A/D conversion is less than 100 times, so 0 replies to cycle data and the scaling value buffer.
Note2：When monitoring by timing of "B", the scaling value between the 0-100ms of "Cycle data 1" replies.
Note3：When monitoring by timing of "C", the scaling value between the 0-100ms of "Cycle data 1" replies.
(The data monitored by timing in the same "Cycle data" of "B" and "C", the same data, It reply.When cycle data is same, it can be judged as the same data. But, when a monitor is late, there is also a possibility that the cycle is doing 1 round.)
Note4：When monitoring by timing of "D", the scaling value between the 101-200ms of "Cycle data 2" replies.