MITSUBISHI ELECTRIC

Mitsubishi Electric AC Servo System

MITSUBISHI ELECTRIC SERVO SYSTEM
MELSERVO-J5

Safety Instructions and Precautions for AC Servos (Safety Sub-Function)

G

Country/Region	Sales office	Tel
USA	Mitsubishi Electric Automation, Inc. 500 Corporate Woods Parkway, Vernon Hills, IL 60061, U.S.A.	Tel : +1-847-478-2100
Germany	Mitsubishi Electric Europe B.V. German Branch Mitsubishi-Electric-Platz 1, 40882 Ratingen, Germany	Tel : +49-2102-486-0
China	Mitsubishi Electric Automation (China) Ltd. Mitsubishi Electric Automation Center, No.1386 Hongqiao Road, Shanghai, China	Tel : +86-21-2322-3030
Korea	Mitsubishi Electric Automation Korea Co., Ltd. 7F to 9F, Gangseo Hangang Xi-tower A, 401, Yangcheon-ro, Gangseo-Gu, Seoul, Korea	Tel : +82-2-6103-9474
Japan	Mitsubishi Electric Corporation Tokyo Building, 2-7-3, Marunouchi, Chiyoda-ku, Tokyo 100-8310, Japan	Tel : +81-3-3218-2111

MITSUBISHI ELECTRIC CORPORATION

HEAD OFFICE: TOKYO BLDG., 2-7-3, MARUNOUCHI, CHIYODA-KU, TOKYO 100-8310, JAPAN

Specifications are subject to change without notice.
Compliance with the indicated global standards and regulations is current as of the release date of this installation guide.
The original instructions for Europe are in English.

IB(NA)-0300516-G(2401)MEE

Copyright©2020 Mitsubishi Electric Corporation All Rights Reserved.

Contents of the package

Packed articles	Quantity
Servo amplifier or drive unit	1
MR-J5 Safety Instructions and Precautions for AC Servos	1
MR-J5 Safety Instructions and Precautions for AC Servos (Safety Sub-Function) (this guide)	1

1. About the manuals

To use the MELSERVO-J5 series safely, read MR-J5 User's Manuals carefully.

1.1 Purpose of this guide

This guide is subject to engineers of machine manufacturers and operators of machines, and explains functional safety of the MR-J5 servo amplifiers/MR-J5D drive units (hereafter "MR-J5"). For detailed information of the products, refer to MR-J5 User's Manual. This guide does not explain how to operate equipment that incorporates an MR-J5.

1.2 Terms related to safety

Item	Detailed explanation
STO (Safe torque off)	Shuts off servo motor drive energy electronically based on an input signal from an external device (secondary-side output shut-off). This corresponds to stop category 0 of IEC/EN 60204-1.
SS1 (Safe stop 1)	Starts deceleration based on an input signal from an external device (EM2). After a specified time to confirm that the motor has stopped, the STO function will be activated (SS1-t). Alternatively, the SS1 function monitors whether the servo motor decelerates according to the deceleration time constant (SS1-r). This corresponds to stop category 1 of IEC/EN 60204-1.
SS2 (Safe stop 2)	Starts deceleration based on an input signal from an external device (EM2). After a specified time to confirm that the motor has stopped, the SOS function will be activated (SS2-t). Alternatively, the SS2 function monitors whether the servo motor decelerates according to the deceleration time constant (SS2-r). This corresponds to stop category 2 of IEC/EN 60204-1.
SOS (Safe operating stop)	This is a function to monitor whether the servo motor stops within the prescribed range for the stop position. The power is supplied to the servo motor.
SLS (Safely-limited speed)	This is a function to observe whether the speed is within a regulated speed limit value. When the speed is over a specified speed, energy will be shut off by STO.
SSM (Safe speed monitor)	Outputs a safety output signal when the servo motor speed is within a regulated speed.
SBC (Safe brake control)	Outputs a safety output signal for an external brake control.
SDI (Safe direction)	Monitors whether the travel direction of the servo motor is as specified. The STO function shuts off the energy if the direction is different from the specified direction.
SLI (Safely-limited increment)	Monitors whether the travel distance of the servo motor is within the specified range. The STO function shuts off the energy if the travel distance exceeds the specified range.
SLT (Safely-limited torque)	Monitors whether the torque exceeds the specified torque. The STO function shuts off the energy if the torque exceeds the specified torque.
Status monitor (SM)	Outputs a signal that indicates the status of the safety sub-function. This is an original function of the MR-J5 and is not defined in IEC/EN 61800-5-2.

2. About safety

This chapter explains safety of users and machine operators. Please read the chapter carefully before mounting the equipment. In this guide, the specific warnings and caution levels are classified as follows.

⚠WARNIN	Indicates that incorrect handling may cause hazardous conditions, resulting in death or severe injury.
⚠CAUTION	Indicates that incorrect handling may cause hazardous conditions, resulting in medium or slight injury.

2.1 Professional engineer

Only professional engineers should mount this to MR-J5.
Here, professional engineers should meet all the conditions below.

(1) Persons who took a proper training of related work of electrical equipment or persons who can avoid risk based on past experience.
(2) Persons who have read and familiarized himself/herself with this installation guide and operating manuals for the protective devices (e.g. light curtain) connected to the safety control system.

2.2 Conditions of use for the product

(1) MR-J5 complies with a safety standard, but this fact does not guarantee that MR-J5 will be free from any malfunction or failure. The user of this product shall comply with any and all applicable safety standard, regulation or law and take appropriate safety measures for the system in which the product is installed or used and shall take the second or third safety measures other than the product. Our company is not liable for damages that could have been prevented by compliance with any applicable safety standard, regulation or law.
(2) Our company prohibits the use of this product in applications involving, and we shall not be liable for a default, a liability for defect warranty, a quality assurance, negligence or other tort and a product liability in these applications.
  (a) Power plants
  (b) Trains, railway systems, airplanes, airline operations, and other transportation systems
  (c) Hospitals, medical care, dialysis and life support facilities or equipment
  (d) Amusement equipment
  (e) Incineration and fuel devices
  (f) Handling of nuclear or hazardous materials or chemicals
  (g) Mining and drilling
  (h) Other applications where the level of risk to human life, health or property are elevated.

2.3 Correct use

⚠CAUTION ●If you need to get close to the moving parts of the machine for inspection or other purposes, ensure safety by confirming the power off, etc. Otherwise, it may cause an accident.

Point
●The safety sub-function complies with the immunity-relating basic specifications required for functional safety, and fulfills requirements for industrial use in the safety sub-function is not for general use.
●Functional safety is not available for MR-J5-_G4-HS(N1) in a default state. To use functional safety, set the functional safety parameters according to the MR-J5 user's manual.

Only professional engineers can use control systems relating to the safety sub-function that are configured with an MR-J5. Additionally, only when a professional engineer installed, performed test operations, and adjusted a machine following the MR-J5 user's Manuals, an operator can use the machine.

2.4 Safety sub-function compatible unit

The safety sub-function is executed by writing parameters and programs to systems configured with the MR-J5 and the safety programmable controllers in the following table. Set the safety sub-function parameters of the MR-J5 correctly for proper operation of the safety sub-function. Protective functions such as the safety sub-function may not work due to an incorrect setting. Refer to the MR-J5 User's Manuals for the parameter setting details.

(1) List of safety sub-function compatible unit

Product name	Model
Servo amplifier/drive unit	MR-J5- G(4)-RJ(N1), MR-J5- G4-HS(N1), MR-J5W - G(-N1), MR-J5D - G (-N1)
Programmable controller *1	R SFCPU

*1 For using the safety sub-function via CC-Link IE TSN

(2) List of safety sub-function compatible units

Servo amplifier/ drive unit	Function achieving method (wiring direction)	Servo motor type *8	Safety sub-function (IEC/EN 61800-5-2) *7										
			STO	SS1		SS2 *3	SOS *3	SBC	SLS *3	SSM *3	SDI *3	SLI *3	SLT
				SS1-t	SS1-r *3	SS2-t, SS2-r							
MR-J5-_G(4) (-N1) MR-J5-_A(4) (-RJ)	DI/O connection (CN8)	FS/RO/LI/DD	Cat. 3 PL e, SIL 3	- *9	-	-	-	-	-	-	-	-	-
MR-J5-_G(4) (-N1) MR-J5-_G(4)-RJ(N1)	DI/O connection (CN8)	FS	Cat. 4 PL e, SIL 3	Cat. 4 PL e, SIL 3	Cat. 4 PL e, SIL 3	Cat. 4 PL e, SIL 3	Cat. 4 PL e, SIL 3	Cat. 4 PL e, SIL 3	Cat. 4 PL e, SIL 3	Cat. 4 PL e, SIL 3	Cat. 4 PL e, SIL 3	Cat. 4 PL e, SIL 2	Cat. 3 PL d, SIL 2
		RO/LI/DD	Cat. 4 PL e, SIL 3	Cat. 4 PL e, SIL 3	Cat. 3 PL d, SIL 2	-	-	Cat. 4 PL e, SIL 3	Cat. 3 PL d, SIL 2	Cat. 3 PL d, SIL 2	Cat. 3 PL d, SIL 2	-	Cat. 3 PL d, SIL 2
MR-J5D1-_G_(-N1) MR-J5D2-_G_(-N1) *10 MR-J5D3-_G_(-N1) *10	Network connection (CN1A/CN1B) *1, *5	FS	Cat. 4 PL e, SIL 3	Cat. 4 PL e, SIL 3	Cat. 4 PL e, SIL 3	Cat. 4 PL e, SIL 3	Cat. 4 PL e, SIL 3	Cat. 4 PL e, SIL 3	Cat. 4 PL e, SIL 3	Cat. 4 PL e, SIL 3	Cat. 4 PL e, SIL 3	Cat. 4 PL e, SIL 2	Cat. 3 PL d, SIL 2
		RO/LI/DD	Cat. 4 PL e, SIL 3	Cat. 4 PL e, SIL 3	Cat. 3 PL d, SIL 2	-	-	Cat. 4 PL e, SIL 3	Cat. 3 PL d, SIL 2	Cat. 3 PL d, SIL 2	Cat. 3 PL d, SIL 2	-	Cat. 3 PL d, SIL 2

*1 Combine the MR-J5 with a programmable controller R_SFCPU with a firmware version 20 or later.
*2 The safety levels in the table apply if the safety sub-function control is performed by a programmable controller, a safety CPU, MR-J5-_G4-HS(N1) or a safety controller that complies with Category 4 PL e, SIL 3.
If the MR-J5 are directly connected with emergency stop switches, safety switches, enabling switches, or other similar devices, the safety level Category 3 PL d, SIL 2 applies.
*3 Fully closed loop control systems do not support SS1-r, SS2, SOS, SLS, SSM, SDI, and SLI.
*4 The safety sub-function is supported by the MR-J5W_-_G manufactured in November 2019 or later. STO can be set separately for each axis.
*5 The safety sub-function via a network connection with CC-Link IE Field Network Basic cannot be used.
*6 For DI/O connection (CN8/CN3), a diagnosis using test pulses is required to satisfy Category 4 PL e, SIL 3.
e.g.: Category 4 if the SBC output test pulse is valid, Category 3 if it is not.
*7 For information on the firmware versions of the MR-J5 with which the safety sub-function can be used, refer to the User's Manual (Introduction).
*8 FS: Servo motor with functional safety, RO: Rotary servo motor, LI: Linear servo motor, DD: Direct drive motor
*9 The servo amplifiers support SS1-t when combined with MR-J3-D05.
*10 STO can be set separately for each axis.

2.5 General cautions for safety protection and protective measures

Point
●Observe the cautions for safety protection and protective measures.
●Observe the items in this section for proper use of the safety sub-function.

(1) When mounting, installing, and using the safety sub-function, always observe the standards and directives applicable in the respective countries.
(2) The manufacturer and owner of machines for which the safety sub-function of MR-J5 is used should be familiarized with all the applicable laws and regulations and should be responsible to observe them.
For Declaration of Conformity (DoC), our company declares that the MR-J5 is in compliance with the necessary requirements and standards (2006/42/EC, 2014/30/EU, 2014/35/EU, 2011/65/EU, and (EU)2015/863). For the copy of Declaration of Conformity, contact your local sales office.
(3) The contents of the MR-J5 User's Manuals must be observed. When using an encoder manufactured by another company that complies with Mitsubishi Electric Serial ENC communication or ABZ-pulse (TTL), also according to the manual for that encoder, estimate the PFH for the whole safety system according to the diagnostic coverage (DC) of the encoder given in specifications under the responsibility of the customer. All the encoder for PDS should comply IEC/EN 61800-5-1 safety and IEC/EN 61800-5-2 including environmental and EMC.
When there is no PFH value of encoder, it should be calculate from based MTBF (acceptable range of failure rate of encoder λd = 50 %, λdu = (1-DC) * λd). And at least PFH < 9E-7 (for SIL2), PFH < 9E-8 (for SIL 3) or less.
(4) Tests should be performed by professional engineers, especially qualified and responsible personnel, and should be recorded/documented for a third party to rebuild and confirm the tests.
(5) An external power supply of equipment should have resistance to instantaneous power failure for 20 ms according to the specifications of IEC/EN 60204-1.

2.6 Disposal

Disposal of unusable or irreparable devices should always occur in accordance with the applicable country-specific waste disposal regulations.

2.7 Risk assessment

To ensure safety, users should decide all the risk assessments and residual risks in the entire machine equipment. A company and/or individual who constructed the safety related system must take full responsibility for installation and commissioning of the system. Additionally, when complying with a European machinery directive, the system must acquire safety standards certification as a whole.
Perform all risk assessments and safe level certification to the machine or the system as a whole. It is recommended that a Certification Body final safety certification of the system be used.
The following shows residual risks concerning the safety sub-function of this product.

2.7.1 Common residual risks in each function
(1) At the shipment to end-users, check the settings of safety related components with programming tools and monitored/displayed contents on display and record and save the setting data concerning the safety sub-function and the programming tools you used. Perform them using a check sheet, etc.
(2) The safety will not be ensured such as in assembling machine until installing, wiring, and adjustment are completed properly. Install, wire, and adjust your system referring to installation guide for each unit.
(3) Only qualified personnel are authorized to install, startup, repair or adjust the machines in which the components are installed. Only trained engineers should install and operate the equipment. (ISO 13849-1:2015 Table F.1 No. 5)
(4) Separate the wiring for the safety sub-function from other signal wirings.
(ISO 13849-1:2015 Table F.1 No. 1)
(5) Protect the cables with appropriate ways (routing them in a cabinet, using a cable guard, etc.).
(6) We recommend using a switch, relay, sensor, etc. which comply with safety standards. When using a switch, relay, sensor, etc. which do not comply with safety standards, perform a safety confirmation.
(7) Keep the required clearance/creepage distance depending on voltage you use.
(8) The time to detect a safety observation error depends on the parameter setting.

2.7.2 Residual risks specific to each function
(1) Speed monitoring (SLS)
  (a) Speed monitoring function guarantees the servo motor speed, but it does not guarantee the actual machine safety speed. Set parameters so that the safe speed of the machine is the same as the safety speed of the specified motor.
  (b) Check if the speed of the monitored servo axis is the same as the actual speed by using a tachometer, etc. considering the speed includes an error caused by the command and encoder resolution.
  (c) The defect of the mechanical section such as slid of shaft and wanting of a timing belt, etc. is not covered. Be sure to eliminate the risk of mechanical section before operation.
  (d) Speed monitoring error detection time is set to 1 ms. Errors in shorter than this time are not detected.
  (e) After speed is over the limit, a safety observation error (shut-off signal (off) does not occur during the speed error detection time set by parameters. Make sure that safety can be ensured during this period.
(2) Safe speed monitor (SSM)
When SSM is used as a restart trigger, perform it according to IEC/EN 60204-1.
(3) Safe brake control (SBC)
This function guarantees only that power to mechanic break is properly supplied and abrasion of the brake cannot be detected. Check this function regularly that the mechanic brake can operate.
(4) Safe stop holding (SOS)
If the motor remains at the same stop position for a long time, move the motor slightly from time to time to prevent a cumulative malfunction.
(5) Safe travel distance limit (SLI)
If the motor shaft (or a coil, if a linear servo motor is used) remains at a stop for a long time after the motor has traveled as specified, switch the function to the SOS function.
(6) Safe rotation direction limit (SDI)
If the motor shaft (or a coil, if a linear servo motor is used) remains at a stop for a long time after the motor has traveled as specified, switch the function to the SOS function.

3. Using safety sub-functions and block diagram

3.1 Using safety sub-functions

The safety sub-functions can be used on the MR-J5-_G(4) -RJ, MR-J5-_G4-HS(N1), MR-J5W -_G(-N1) and MR-J5D -_G_(-N1). Refer to the MR-J5 User's Manuals for applications and setting methods of the functions.

(1) Using safety sub-functions by MR-J5 itself
The safety sub-functions can be used by assigning them (STO, SLS, etc.) to CN8/CN3.
(2) Using safety sub-functions by combining with safety programmable controllers
The MR-J5-_G(4) -RJ, MR-J5-_G4-HS, MR-J5W_-_G and MR-J5D_-_G_ are used to establish a safe communication with safety programmable controllers via CC-Link IE TSN. This enables the electrical wirings (for example STO) to the MR-J5 to be omitted.
(3) Using safety sub-functions by combining with FSoE Master
The MR-J5-_G(4)_-RJN1, MR-J5-_G4-HSN1, MR-J5W_-_G-N1, and MR-J5D_-_G_-N1 are used to establish safe communication with the FSoE Master via FSoE. This enables the electrical wirings (for example STO) to the MR-J5 to be omitted.

3.2 Function block diagrams

This is an example of a combination with the MR-J5-_G-RJ.

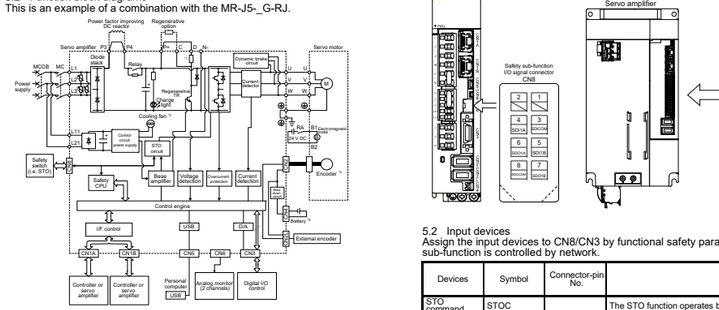

*1 The built-in regenerative resistor is not used for MR-J5-10G_
*2 Servo amplifiers with the rated output symbol of 70 (MR-J5-70G_) or greater have a cooling fan.
*3 To configure an absolute position detection system by using a direct drive motor, the battery is required. To configure the absolute position detection system by using the HK series servo motor, the battery is not required.
*4 Support encoder type are OSBA/OBSA/CBW/CSW, another company encoder that complies with Mitsubishi Electric Serial ENC communication and ABZ-pulse.

4. Technical specifications

4.1 Servo amplifier/drive unit specifications

	Model	MR-J5-_G(4)-RJ(N1)/MR-J5W_-_G(-N1)/ MR-J5D -_G (-N1)	MR-J5-_G4-HS(N1)
Safety performance	Standards *1	EN ISO 13849-1:2015 Category 4 PL e, IEC 61508 SIL 3, EN IEC 62061:2021 maximum SIL 3, EN 61800-5-2	
	Mean time to dangerous failure (MTTFd	MTTFd ≥ 100 [years] (750a)	MTTFd ≥ 100 [years] (300a)
	Diagnostic coverage (DC)	DC = Medium, 96.5 [%]	
	Probability of dangerous Failure per Hour (PFH)	PFH = 3 × 10^{-8} [1/h]	PFH = 7.7 × 10^{-9} [1/h]
	Mission time (Tu) *2	TM = 20 [year]	

*1 For DI/O connection (CN8/CN3), a diagnosis using test pulses is required to satisfy Category 4 PL e, SIL 3.
*2 The performance of special proof tests within the mission time of the product is regarded as not necessary. For example, on IEC 61800-5-2:2016, the diagnostic interval is suggested as at least one test per three months for Category 3 PL e, SIL 3.

4.2 Function specifications

Model			MR-J5-_G(4)-RJ(N1)/ MR-J5W_-_G(-N1)/MR-J5D -_G (-N1)	MR-J5-_G4-HS(N1)
Safety sub-function *1, *2	STO	Shut-off response time (STO input off → energy shut off)	8 ms or less (when an input device is used) 60 ms or less (with CC-Link IE TSN) *3, *4, *7 60 ms or less (with EtherCAT) *4, *7 *8	
	SS1	Deceleration delay time	0 ms to 60000 ms (set by functional safety parameters)	
	SS2	Deceleration delay time	0 ms to 60000 ms (set by functional safety parameters)	
	SOS	Observation position	0 rev to 1000 rev (set by functional safety parameters)	
	SBC	Shut-off response time	8 ms or less (when an input device is used) 60 ms or less (with CC-Link IE TSN) *3, *4, *7 60 ms or less (with EtherCAT) *4, *7 *8	
	SLS1/2/3/4	Observation speed	0 r/min (mm/s) to 10000 r/min (mm/s) (set by functional safety parameters) *5	
	SSM	Observation speed	0 r/min (mm/s) to 10000 r/min (mm/s) (set by functional safety parameters)	
	SDI	Direction monitor delay time	0 ms to 60000 ms (set by functional safety parameters)	
	SLI	Observation position	0 rev to 1000 rev (set by functional safety parameters)	
	SLT	Observation torque	-1000.0 % to 1000.0 % (set by functional safety parameters)	
I/O function	Input device	Number of input points (double wiring)	1 point	3 points
		Mismatched permissible time of redundant input mismatch detection	0 ms to 60000 ms (set by functional safety parameters)	
		Noise eliminating filter	1.000 ms to 32.000 ms (set by functional safety parameters)	
		Test pulse off time *6	Within 1 ms	
		Test pulse interval *6	250 ms to 1000 ms	
	Output device	Number of output points (double wiring)	1 point	3 points
		Test pulse off time	0.500 ms to 2.000 ms (set by functional safety parameters)	
		Test pulse interval	Within 1 s	
	External wiring diagnostic output	Number of output points (double wiring)		1 point
		Test pulse off time		1.000 ms/2.000 ms (set by functional safety parameters)
		Test pulse interval		Within 1 s
Safe communication function		Response time	250 ms (Transmission interval monitor time within 64 ms) (with CC-Link IE TSN) 250 ms (FSoE Watchdog Time within 60 ms) (with EtherCAT)	
		Transmission interval monitor time	16.0 ms to 1000.0 ms (set by functional safety parameters) (with CC-Link IE TSN) *7	
		FSoE Watchdog Time	16.0 ms to 65534.0 ms (set by objects) (with EtherCAT) *7	
		Safe communication delay time	60 ms or less (with CC-Link IE TSN) *3, *4 60 ms or less (with EtherCAT) *7, *8	

*1 Available functions and safety levels differ depending on the combination of the MR-J5 and the servo motors. Refer to 2.4 (2).
*2 For DI/O connection (CN8/CN3), a diagnosis using test pulses is required to satisfy Category 4 PL e, SIL 3.
*3 This value is applicable when the transmission interval monitor time is 32.0 ms or less.
*4 For the MR-J5-_G(4)-RJ, MR-J5-_G4-HS and MR-J5D1-_G_-N1, connect to a network with a communication cycle of 125 µs or longer. For the MR-J5-_G(4)-RJN1, MR-J5-_G4-HSN1 and MR-J5D1-_G_-N1, connect to a network with a communication cycle of 250 µs or longer. For the MR-J5W_-_G(-N1), MR-J5D2-_G_(-N1) and MR-J5D3-_G_(-N1), connect to a network with a communication cycle of 500 µs or longer.
*5 The safety observation speed can be set separately.
*6 A test pulse is a signal which instantaneously turns off a signal to the MR-J5 at a constant period for external circuits to perform self-diagnosis.
*7 The specifications are for using the safety-sub function via a network connection.
*8 This value is applicable when FSoE Watchdog Time is 30.0 ms or less.

4.3 When using the I/O of the CN8/CN3 connector of the MR-J5

This I/O function can be used when the safety sub-function control by network is not used.

4.3.1 I/O signal sequence

An operation sequence with the SLS function achieved by the input wiring CN8-4 and CN8-5 pins is shown as an example.

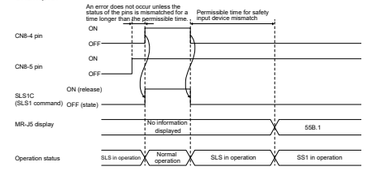

SLS1C (SLS1 command) is off while the states of the CN8-4 pin and the CN8-5 pin do not match. SLS1C (SLS1 command) turns on when the states of both the CN8-4 pin and the CN8-5 pin are on. If a mismatch continues longer than the permissible mismatch time specified by the parameter, [AL. 5SB Safety input device mismatch detection] will occur and the SS1 function will be activated.

4.3.2 Selecting input devices

The input devices can be assigned to CN8/CN3 by functional safety parameters. (Refer to chapter 5)
The safety sub-functions can be activated with axis-A itself by using an input signal, and also can be activated with axis-A, B, and C at the same time.

Input signal
STOC (STO command), SS1C (SS1 command), SS2C (SS2 command), SLS1C (SLS1 command), SDIPC (SDIP command), SDINC (SDIN command), SLIC (SLI command), and SLT1C (SLT1 command)

4.3.3 Output signal sequence

An operation sequence with STOS (STO output) assigned to the input wiring CN8-6 and CN8-7 pins is shown as an example.

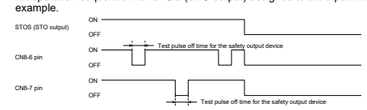

Pulses to turn off the signal will be output periodically to the CN8-6 and CN8-7 pins when STOS (STO output) is turned on. The pulses to turn off the signal will be output from the CN8-6 and CN8-7 pins separately at different timings, and the pulses will not be output at the same time. The length of time for outputting the pulses to turn off the signal can be set in [Pr. PSD30 Output device - Test pulse off time]. Make sure that the time length for the output pulses to turn off the signal will not affect the external devices.

4.3.4 Selecting output devices

The output devices can be assigned to CN8/CN3 by functional safety parameters. (Refer to chapter 5)
If a multi-axis servo amplifier/multi-axis drive unit are used, it is possible to select which axis will output a signal to the output signal. Outputting a signal only from axis-A is possible, and outputting signals from axis-A, B, and C by AND output is also possible.

Output signal
STOS (STO output), SS1S (SS1 output), SS2S (SS2 output), SLS1S (SLS1 output) to SLS4S (SLS4 output), SSMS (SSM output) SOSS (SOS output), SBCS (SBC output), SDIPS (SLIP output), SDINS (SDIN output), SLIS (SLI output), and SLT1S (SLT1 output) to SLT4S (SLT4 output)

5. Signals

5.1 Connector pin assignment of the safety sub-function I/O signals

The following shows connector pin assignments of the MR-J5-10G-RJ and the MR-J5-500G4-HS as a typical example.
Refer to "MR-J5 User's Manual (Hardware)" for precautions for wiring or other operations.

(1) MR-J5-10G-RJ (2) MR-J5-500G4-HS

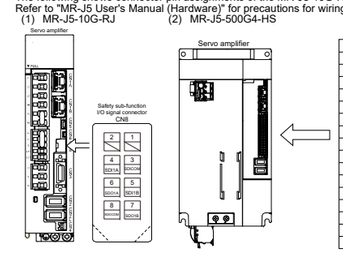

Pin No.	Symbol	Symbol	Pin No.
1A	DICOM	MBR	1B
2A	INP	ALM	2B
3A	DICOM	EM2	3B
4A	TPR1	TPR2	4B
5A	LSP	LSN	5B
6A	DICOM	DOG	6B
7A	-	-	7B
8A	SDI1A	SDI1B	8B
9A	SDICOMA	SDICOMB	9B
10A	SDO24VA	SDO24VB	10B
11A	SDO1A	SDO1B	11B
12A	SDI2A	SDI2B	12B
13A	SDI3A	SDI3B	13B
14A	SDO2A	SDO2B	14B
15A	SDO3PA/PLSPA	SDO3PB/PLSPB	15B
16A	SDO3NA/PLSNA	SDO3NB/PLSNB	16B

5.2 Input devices

Assign the input devices to CN8/CN3 by functional safety parameters. The devices can be input via network if the safety sub-function is controlled by network.

Devices	Symbol	Connector-pin No.	FUNCTION	Input pin states that enable functions
STO command	STOC	CN8-4 CN8-5 CN3-8A CN3-8B CN3-12A CN3-12B CN3-13A CN3-13B	The STO function operates by the STO command.	Open
SS1 command	SS1C		The SS1 function operates by the SS1 command.	Open
SS2 command	SS2C		The SS2/SOS functions operate by the SS2 command.	Open
SLS1 command to SLS4 command	SLS1C to SLS4C		The SLS function 1 to SLS function 4 operates by the SLS1 command to SLS4 command. Four sets of SLS speed and SLS deceleration monitor time can be set with the SLS function.	Open
SDIP command	SDIPC		The SDIP command activates the SDI function for the address increasing direction.	Open
SDIN command	SDINC		The SDIN command activates the SDI function for the address decreasing direction.	Open
SLI command	SLIC		The SLI command activates the SLI function.	Open
SLT1 command to SLT4 command	SLT1C to SLT4C		The SLT function 1 to SLT function 4 operates by the SLT1 command to SLT4 command. Four sets of SLT torque upper limit value and SLT torque lower limit value can be set with the SLT function.	Open

5.3 Output devices

The CN8/CN3 output the status monitor (SM) of the safety sub-function. The output devices can be assigned to CN8/CN3 by functional safety parameters. The status monitor can be output via network if the safety sub-function is controlled by network. In that case, the CN8/CN3 can also be used at the same time.

Devices	Symbol	Connector-pin No.	FUNCTION	Output pin status during operation
SSM output	SSMS	CN8-6 CN8-7 CN3-11A CN3-11B CN3-14A CN3-14B CN3-15A CN3-15B CN3-16A CN3-16B	Indicates that the servo motor speed is equal to or lower than the SSM speed while the speed monitoring by the SSM function is activated.	Close
SBC output	SBCS		Outputs a control signal of the electromagnetic brake.	Open
STO output	STOS		This is a monitor signal meaning that the STO function is operating.	Open
SOS output	SOSS		This is a monitor output signal meaning that the SS2/SOS function monitors the servo motor is in the stop state.	Open
SS1 output	SS1S		This is a monitor signal meaning that the SS1 function is operating.	Open
SS2 output	SS2S		This is a monitor signal meaning that the SS2/SOS function is operating.	Open
SLS1 output to SLS4 output	SLS1S to SLS4S		This is a monitor output signal meaning that the SLS function 1 to SLS function 4 are operating.	Open
SDIP output	SDIPS		This is a monitor output signal indicating that the SDI function has been activated.	Open
SDIN output	SDINS		This is a monitor output signal indicating that the SDI function has been activated.	Open
SLI output	SLIS		This is a monitor output signal indicating that the SLI function has been activated.	Open
SLT1 output to SLT4 output	SLT1S to SLT4S		This is a monitor output signal indicating that the SLT function 1 to SLT function 4 has been activated.	Open

6. Setting method

If using the safety sub-function, follow the procedure in this chapter.

Step	Detailed explanation
Checking the wiring	Check that the CN8/CN3 connector and network have been wired correctly.
Setting functional safety parameters	Refer to information on the settings of the function and set functional safety parameters.
Setting a password	Set a password for the functional safety parameters to prevent them from being changed easily.
Verifying functional safety parameters	Read the functional safety parameters to verify that they have been set correctly.
Ensuring the correct functioning of safety sub-functions	Ensure that the safety sub-functions work correctly.

6.1 Parameter setting

The safety sub-function parameters can be set with MR Configurator2. Settings related to the safety sub-function are configured with this group of parameters. The safety sub-function parameters have a password to prevent unintended changes of the parameters. The password is "000000" at the factory setting.
The following parameters must be set.

Parameter	Name	Detailed explanation
PSA01.0	Safety sub-function activation setting	Set this parameter to "1" only after confirming the settings of the functional set by functional safety parameters.
PSA01.1	Input mode selection	Set the safety sub-function to be controlled either by input device or by network.
PSA02	Functional safety setting	Recommended parameter settings and achievable safety levels differ depending on the system configuration.
PSA03	SS1/SS2 deceleration monitor time	Settings of the parameters for the SS1 function are necessary as the SS1 function is to be used if a problem is found by self-diagnosis.
PSA20	Servo motor encoder resolution	Set the encoder resolution of the servo motor being connected. This parameter does not need to be set if position/speed monitoring is not performed.
PSA23	Servo motor rated speed	The rated speed of the servo motor being connected must be set if speed monitoring is performed.
PSC03	Functional safety - Rotation direction selection/ Movement direction selection	Set the same value in [Pr. PSC03.0] and [Pr. PA14 Rotation direction selection/travel direction selection].
PSL02	Functional safety - Linear motor encoder resolution - Numerator	The observation direction by the SDIP command is the address increasing direction. If POL is set to "1", the observation direction is the address increasing direction (CW or negative direction).
PSL03	Functional safety - Linear motor encoder resolution – Denominator	If position/speed monitoring is performed with a linear servo motor, set this parameter to the same value as [Pr. PL02] and [Pr. PL03].

6.2 Test operation

Test operation can be performed with the safety sub-function temporarily disabled. Set [Pr. PSA01.1 Input mode selection] to "2". Some of the diagnosis functions and the safety sub-functions are disabled in the test operation mode. The test operation can be used for JOG operation, positioning operation, machine analyzer, or other operations if safety devices have not been started up.
To end the test operation, set [Pr. PSA01.1 Input mode selection] to "0" or "1" depending on the system configuration being used.

7. Troubleshooting

Details of main alarms related to the safety sub-function are shown in the following table.

Alarm name	Alarm No.	Cause	Action
STO timing error	063.1	When detection of [AL. 063 STO timing error] is enabled, STO1 was turned off (enabled) under the following speed conditions. • Rotary servo motor speed: 50 r/min or higher • Linear servo motor speed: 50 mm/s or higher • Direct drive motor speed: 5 r/min or higher	After the servo motor stops, turn off (enable) STO1. Review the setting of "STO timing error selection" by using any of the following parameters. {A}: [Pr. PF09.1 STO timing error selection] {G}: [Pr. PF06.1 STO timing error selection]
	063.2	When detection of [AL. 063 STO timing error] is enabled, STO2 was turned off (enabled) under the following speed conditions. • Rotary servo motor speed: 50 r/min or higher • Linear servo motor speed: 50 mm/s or higher • Direct drive motor speed: 5 r/min or higher	After the servo motor stops, turn off (enable) STO2. Review the setting of "STO timing error selection" by using any of the following parameters. {A}: [Pr. PF09.1 STO timing error selection] {G}: [Pr. PF06.1 STO timing error selection]
Encoder initial communication - Receive data error 1 (safety sub-function)	066.1 516.1	There is a problem with the encoder cable.	Check if the encoder cable has been disconnected or has shorted. If there is a problem with the cable, repair or replace the cable.
STO diagnosis error	068.1	STO1 or STO2 is inputted incorrectly.	Check that STO1 and STO2 of the CN8/CN3 connector are wired correctly.
		The input status of STO1 and STO2 are different.	If the on/off status of STO1 and STO2 are different, create the same input status for STO1 and STO2.
		The setting of [Pr. PF18 STO diagnosis error detection time] is incorrect.	Set a longer time in the servo parameter setting, and then check the repeatability. If the error does not repeat, review the value of the servo parameter.
		The STO circuit has malfunctioned.	Replace the MR-J5.
Network communication error	086.1	A network cable has been disconnected.	Check if the network cable is connected correctly.
STO function error	168.1	An MR-J5 that is not compatible with the STO function does not have a short-circuit connector connected to its CN8/CN3 connector.	Install