MITSUBISHI
ELECTRIC

General-Purpose AC Servo

MELSERVO-J3 Series

Built-in Positioning Function

MODEL

MR-J3-□T

SERVO AMPLIFIER
INSTRUCTION MANUAL
(CC-Link)

H

● Safety Instructions ●

Always read these instructions before using the equipment.

To use the equipment correctly, do not attempt to install, operate, maintain or inspect the servo amplifier and servo motor until you have read through this Instruction Manual, Installation guide, Servo motor Instruction Manual (Vol.2) and appended documents carefully and can use the equipment correctly. Do not use the servo amplifier and servo motor until you have a full knowledge of the equipment, safety information and instructions.

In this Instruction Manual, the safety instruction levels are classified into "WARNING" and "CAUTION".

⚠ WARNING	Indicates that incorrect handling may cause hazardous conditions, resulting in death or severe injury.
⚠ CAUTION	Indicates that incorrect handling may cause hazardous conditions, resulting in medium or slight injury to personnel or may cause physical damage.

Note that the CAUTION level may lead to a serious consequence according to conditions. Please follow the instructions of both levels because they are important to personnel safety.

What must not be done and what must be done are indicated by the following diagrammatic symbols.

⊘: Indicates what must not be done. For example, "No Fire" is indicated by 🚫 .

●: Indicates what must be done. For example, grounding is indicated by ⏚ .

In this Instruction Manual, instructions at a lower level than the above, instructions for other functions, and so on are classified into "POINT".

After reading this installation guide, always keep it accessible to the operator.

1. To prevent electric shock, note the following

⚠ WARNING

- Before wiring or inspection, turn off the power and wait for 15 minutes or more until the charge lamp turns off. Then, confirm that the voltage between P(＋) and N(－) is safe with a voltage tester and others. Otherwise, an electric shock may occur. In addition, always confirm from the front of the servo amplifier, whether the charge lamp is off or not.
- Connect the servo amplifier and servo motor to ground.
- Any person who is involved in wiring and inspection should be fully competent to do the work.
- Do not attempt to wire the servo amplifier and servo motor until they have been installed. Otherwise, you may get an electric shock.
- Operate the switches with dry hand to prevent an electric shock.
- The cables should not be damaged, stressed, loaded, or pinched. Otherwise, you may get an electric shock.
- During power-on or operation, do not open the front cover of the servo amplifier. You may get an electric shock.
- Do not operate the servo amplifier with the front cover removed. High-voltage terminals and charging area are exposed and you may get an electric shock.
- Except for wiring or periodic inspection, do not remove the front cover even of the servo amplifier if the power is off. The servo amplifier is charged and you may get an electric shock.
- To prevent an electric shock, always connect the protective earth (PE) terminal (marked ⏚) of the servo amplifier to the protective earth (PE) of the control box.
- When using an earth-leakage current breaker (RCD), select type B.
- To avoid an electric shock, insulate the connections of the power supply terminals.

2. To prevent fire, note the following

⚠ CAUTION

- Install the servo amplifier, servo motor and regenerative resistor on incombustible material. Installing them directly or close to combustibles will lead to smoke or a fire.
- Always connect a magnetic contactor between the power supply and the power supply (L_1, L_2, and L_3) of the servo amplifier, and configure the wiring to be able to shut down the power supply on the side of the servo amplifier’s power supply. If a magnetic contactor is not connected, continuous flow of a large current may cause smoke or a fire when the servo amplifier malfunctions.
- When a regenerative resistor is used, use an alarm signal to switch main power off. Otherwise, a regenerative transistor fault or the like may overheat the regenerative resistor, causing smoke or a fire.
- In order to configure a circuit that shuts down the power supply on the side of the servo amplifier’s power supply, always connect one molded-case circuit breaker or fuse per one servo amplifier between the power supply and the main circuit power supply (L_1, L_2, and L_3) of a servo amplifier. If a molded-case circuit breaker or fuse is not connected, continuous flow of a large current may cause smoke or a fire when the servo amplifier malfunctions.
- Provide adequate protection to prevent screws and other conductive matter, oil and other combustible matter from entering the servo amplifier and servo motor.

3. To prevent injury, note the follow

⚠ CAUTION

- Only the voltage specified in the Instruction Manual should be applied to each terminal, Otherwise, a burst, damage, etc. may occur.
- Connect the terminals correctly to prevent a burst, damage, etc.
- Ensure that polarity (＋, －) is correct. Otherwise, a burst, damage, etc. may occur.
- Take safety measures, e.g. provide covers, to prevent accidental contact of hands and parts (cables, etc.) with the servo amplifier heat sink, regenerative resistor, servo motor, etc. since they may be hot while power is on or for some time after power-off. Their temperatures may be high and you may get burnt or parts may be damaged.
- During operation, never touch the rotating parts of the servo motor. Doing so can cause injury.

4. Additional instructions

The following instructions should also be fully noted. Incorrect handling may cause a fault, injury, electric shock, fire, etc.

(1) Transportation and installation

⚠ CAUTION

- Transport the products correctly according to their mass.
- Stacking in excess of the specified number of products is not allowed.
- Do not carry the servo motor by the cables, shaft or encoder.
- Do not hold the front cover to transport the servo amplifier. The servo amplifier may drop.
- Install the servo amplifier and the servo motor in a load-bearing place in accordance with the Instruction Manual.
- Do not climb or stand on servo equipment. Do not put heavy objects on equipment.
- The servo amplifier and servo motor must be installed in the specified direction.
- Leave specified clearances between the servo amplifier and control enclosure walls or other equipment.
- Do not install or operate the servo amplifier and servo motor which has been damaged or has any parts missing.
- Do not block intake and exhaust areas of the servo amplifier and the servo motor with a cooling fan. Otherwise, it may cause a malfunction.
- Do not drop or strike the servo amplifier and servo motor. Isolate them from all impact loads.
- Securely attach the servo motor to the machine. If attach insecurely, the servo motor may come off during operation.
- The geared servo motor must be installed in the specified direction to prevent oil leakage.
- Take safety measures, e.g. provide covers, to prevent accidental access to the rotor of the servo motor during operation.
- Never hit the servo motor or shaft, especially when coupling the servo motor to the machine. Otherwise, the encoder may malfunction.
- Do not subject the servo motor shaft to more than the permissible load. Otherwise, the shaft may break.
- When the equipment has been stored for an extended period of time, contact your local sales office.
- When handling the servo amplifier, be careful about the edged parts such as corners of the servo amplifier.

⚠ CAUTION

- When you keep or use the equipment, please fulfill the following environmental conditions.

Item			Environment		
			Servo amplifier	Servo motor	
Ambient temperature	In operation	[°C]	0 to +55 (non-freezing)	0 to +40 (non-freezing)	
		[°F]	32 to 131 (non-freezing)	32 to 104 (non-freezing)	
	In storage	[°C]	－20 to +65 (non-freezing)	－15 to +70 (non-freezing)	
		[°F]	－4 to 149 (non-freezing)	5 to 158 (non-freezing)	
Ambient humidity	In operation		90%RH or less (non-condensing)	80%RH or less (non-condensing)	
	In storage			90%RH or less (non-condensing)	
Ambience			Indoors (no direct sunlight) Free from corrosive gas, flammable gas, oil mist, dust and dirt		
Altitude			Max. 1000m (3280 ft) above sea level		
(Note) Vibration resistance	[m/s^2]		5.9 m/s^2, 10 to 55Hz (directions of X, Y and Z axes)	HF-MP series HF-KP series	X・Y: 49
				HF-SP51・81 HF-SP52 to 152 HF-SP524 to 1524 HC-RP Series HC-UP72・152 HF-JP53 to 503・11K1M・15K1M HF-JP534 to 5034・11K1M4・15K1M4	X・Y: 24.5
				HF-SP121・201 HF-SP202・352 HF-SP2024・3524 HC-UP202 to 502	X: 24.5 Y: 49
				HF-SP301・421 HF-SP502・702 HF-SP5024・7024 HF-JP703・903 HF-JP7034・9034	X: 24.5 Y: 29.4
				HC-LP52 to 152	X: 9.8 Y: 24.5
				HC-LP202 to 302	X: 19.6 Y: 49
				HA-LP601 to 12K1 HA-LP701M to 15K1M HA-LP502 to 22K2 HA-LP6014・12K14 HA-LP701M4・15K1M4 HA-LP11K24 to 22K24	X: 11.7 Y: 29.4
				HA-LP15K1 to 25K1 HA-LP22K1M HA-LP15K14・20K14 HA-LP22K1M4	X・Y: 9.8

Note. Except the servo motor with a reduction gear.

- The servo amplifier must be installed in a metal control box.
- When fumigants that contain halogen materials, such as fluorine, chlorine, bromine, and iodine, are used for disinfecting and protecting wooden packaging from insects, they cause malfunction when entering our products. Please take necessary precautions to ensure that remaining materials from fumigant do not enter our products, or treat packaging with methods other than fumigation, such as heat treatment. Additionally, disinfect and protect wood from insects before packing the products.

(2) Wiring

⚠ CAUTION

- Wire the equipment correctly and securely. Otherwise, the servo motor may operate unexpectedly.
- Do not install a power capacitor, surge killer or radio noise filter (FR-BIF-(H) option) between the servo motor and servo amplifier.
- To avoid a malfunction, connect the wires to the correct phase terminals (U, V, and W) of the servo amplifier and servo motor.
- Connect the servo amplifier power outputs (U, V, and W) to the servo motor power inputs (U, V, and W) directly. Do not let a magnetic contactor, etc. intervene. Otherwise, a malfunction or fault may occur.

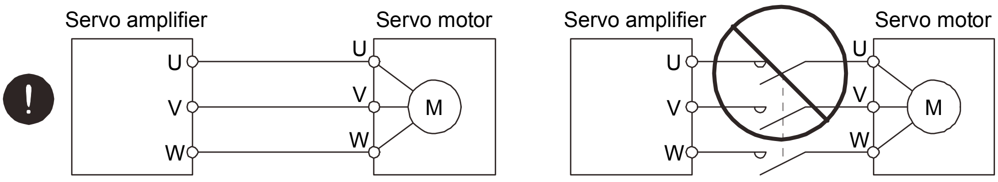

- Do not connect AC power directly to the servo motor. Otherwise, a fault may occur.
- The connection diagrams in this Instruction Manual are shown for sink interfaces, unless stated otherwise.
- The surge absorbing diode installed on the DC output signal relay of the servo amplifier must be wired in the specified direction. Otherwise, the servo amplifier will malfunction and will not output signals, disabling the emergency stop and other protective circuits.

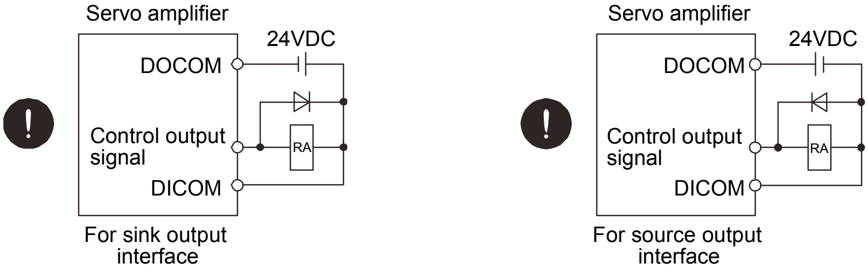

- When the cable is not tightened enough to the terminal block (connector), the cable or terminal block (connector) may generate heat because of the poor contact. Be sure to tighten the cable with specified torque.

(3) Test run adjustment

⚠ CAUTION

- Before operation, check the parameter settings. Improper settings may cause some machines to perform unexpected operation.
- The parameter settings must not be changed excessively. Operation will be unstable.

(4) Usage

⚠ CAUTION

- Provide an external emergency stop circuit to ensure that operation can be stopped and power switched off immediately.
- Any person who is involved in disassembly and repair should be fully competent to do the work.
- Before resetting an alarm, make sure that the run signal of the servo amplifier is off to prevent an accident. A sudden restart is made if an alarm is reset with the run signal on.
- Do not modify the equipment.
- Use a noise filter, etc. to minimize the influence of electromagnetic interference, which may be caused by electronic equipment used near the servo amplifier.
- Burning or breaking a servo amplifier may cause a toxic gas. Do not burn or break a servo amplifier.
- Use the servo amplifier with the specified servo motor.
- The electromagnetic brake on the servo motor is designed to hold the motor shaft and should not be used for ordinary braking.
- For such reasons as service life and mechanical structure (e.g. where a ball screw and the servo motor are coupled via a timing belt), the electromagnetic brake may not hold the motor shaft. To ensure safety, install a stopper on the machine side.

(5) Corrective actions

⚠ CAUTION

- When it is assumed that a hazardous condition may occur due to a power failure or product malfunction, use a servo motor with an electromagnetic brake or an external brake to prevent the condition.
- Configure an electromagnetic brake circuit so that it is activated also by an external emergency stop switch.

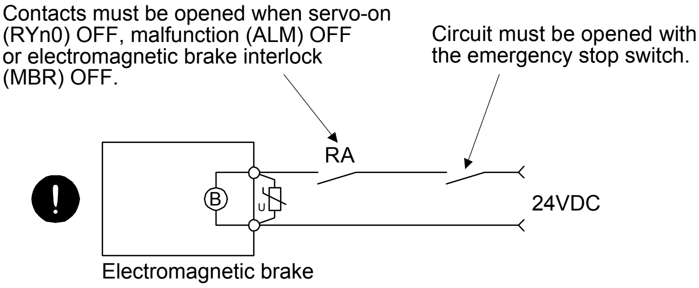

- When any alarm has occurred, eliminate its cause, ensure safety, and deactivate the alarm before restarting operation.
- Provide an adequate protection to prevent unexpected restart after an instantaneous power failure.

(6) Maintenance, inspection and parts replacement

⚠ CAUTION

- With age, the electrolytic capacitor of the servo amplifier will deteriorate. To prevent a secondary accident due to a fault, it is recommended to replace the electrolytic capacitor every 10 years when used in general environment. Please consult our sales representative.
- When using the servo amplifier that has not been energized for an extended period of time, contact your local sales office.

(7) General instruction

- To illustrate details, the equipment in the diagrams of this Specifications and Instruction Manual may have been drawn without covers and safety guards. When the equipment is operated, the covers and safety guards must be installed as specified. Operation must be performed in accordance with this Specifications and Instruction Manual.

● About processing of waste ●

When you discard servo amplifier, a battery (primary battery), and other option articles, please follow the law of each country (area).

⚠ EEP-ROM life

The number of write times to the EEP-ROM, which stores parameter settings, etc., is limited to 100,000. If the total number of the following operations exceeds 100,000, the servo amplifier and/or converter unit may fail when the EEP-ROM reaches the end of its useful life.

- Write to the EEP-ROM due to parameter setting changes
- Home position setting in the absolute position detection system
- Write to the EEP-ROM due to device changes
- Write to the EEP-ROM due to point table changes

COMPLIANCE WITH CE MARKING

Refer to appendix 10 for the compliance with CE marking.

COMPLIANCE WITH UL/cUL STANDARD

Refer to appendix 11 for the compliance with UL/cUL standard.

<<About the manuals>>

This Instruction Manual and the MELSERVO Servo Motor Instruction Manual (Vol.2) are required if you use the General-Purpose AC servo MR-J3-T for the first time. Always purchase them and use the MR-J3-T safely.

Relevant manuals

Manual name	Manual No.
MELSERVO-J3 Series Instructions and Cautions for Safe Use of AC Servos	IB(NA)0300077
MELSERVO Servo Motor Instruction Manual (Vol.2)	SH(NA)030041
EMC Installation Guidelines	IB(NA)67310

<<About the wires used for wiring>>

Wiring wires mentioned in this instruction manual are selected based on the ambient temperature of 40℃ (104℉).

CONTENTS

1. FUNCTIONS AND CONFIGURATION 1 - 1 to 1 -36

2. INSTALLATION 2 - 1 to 2 - 6

3. CC-LINK COMMUNICATION FUNCTIONS 3 - 1 to 3 -60

4. SIGNALS AND WIRING 4 - 1 to 4 -58

5. OPERATION 5 - 1 to 5 -62

6. PARAMETERS 6 - 1 to 6 -42

7. MR Configurator 7 - 1 to 7 -26

8. PARAMETER UNIT (MR-PRU03) 8 - 1 to 8 -20

9. GENERAL GAIN ADJUSTMENT 9 - 1 to 9 -12

10. SPECIAL ADJUSTMENT FUNCTIONS 10- 1 to 10-16

11. TROUBLESHOOTING 11- 1 to 11-28

12. OUTLINE DRAWINGS 12- 1 to 12-12

13. CHARACTERISTICS 13- 1 to 13-12

14. OPTIONS AND AUXILIARY EQUIPMENT 14- 1 to 14-100

15. COMMUNICATION FUNCTION 15- 1 to 15-46

16. INDEXER POSITIONING OPERATION 16- 1 to 16-130

APPENDIX App.- 1 to App.-38

MEMO

1. FUNCTIONS AND CONFIGURATION

1.1 Introduction

The MR-J3-□T CC-Link compatible servo amplifier can support the CC-Link communication functions. Up to 42 axes of servo amplifiers can be controlled/monitored from the programmable controller side.
As the servo, it has the function to perform positioning operation by merely setting the position data (target positions), servo motor speeds, acceleration and deceleration time constants, etc. to point tables as if setting them in parameters. The servo amplifier is the most appropriate to configure a program-free, simple positioning system or to simplify a system, for example.
There are 31 points of point tables to be used when 1 station is occupied and 255 points when 2 stations are occupied.
All servo motors are equipped with an absolute position encoder as standard. An absolute position detection system can be configured by merely adding a battery to the servo amplifier. Once the home position has been set, home position return is not required at power on, alarm occurrence, etc.
The MR-J3-T is made easier to use and higher in function by using it with the MR Configurator.

1.1.1 Features of CC-Link communication functions

(1) Fast communication
Fast communication can be made by cyclic transmission of not only bit data but also word data.

(a) The highest communication speed is 10Mbps.

(b) The broadcast polling system ensures as high as 3.9ms to 6.7ms even at the maximum link scan (10Mbps).

(2) Variable communication speed/distance system
Selection of speed/distance allows use in a wide range of areas from a system requiring high speed to a system requiring long distance.

(3) System fault prevention (station separating function)
Because of connection in the bus system, any remote or local station that has become faulty due to power-off or the like does not affect communications with normal remote and local stations.
In addition, use of the two-piece terminal block allows the unit to be changed during data link.

(4) Factory Automation compatible
As the remote device stations of CC-Link, the servo amplifiers share a link system and can be controlled/monitored with programmable controller user programs.
From the programmable controller side, the running speed, acceleration/deceleration time constant and other settings of servo motors can be changed/checked and the servo motors started and stopped.

1.1.2 Function block diagram

The function block diagram of this servo is shown below.

(1) MR-J3-350T or less・MR-J3-200T4 or less

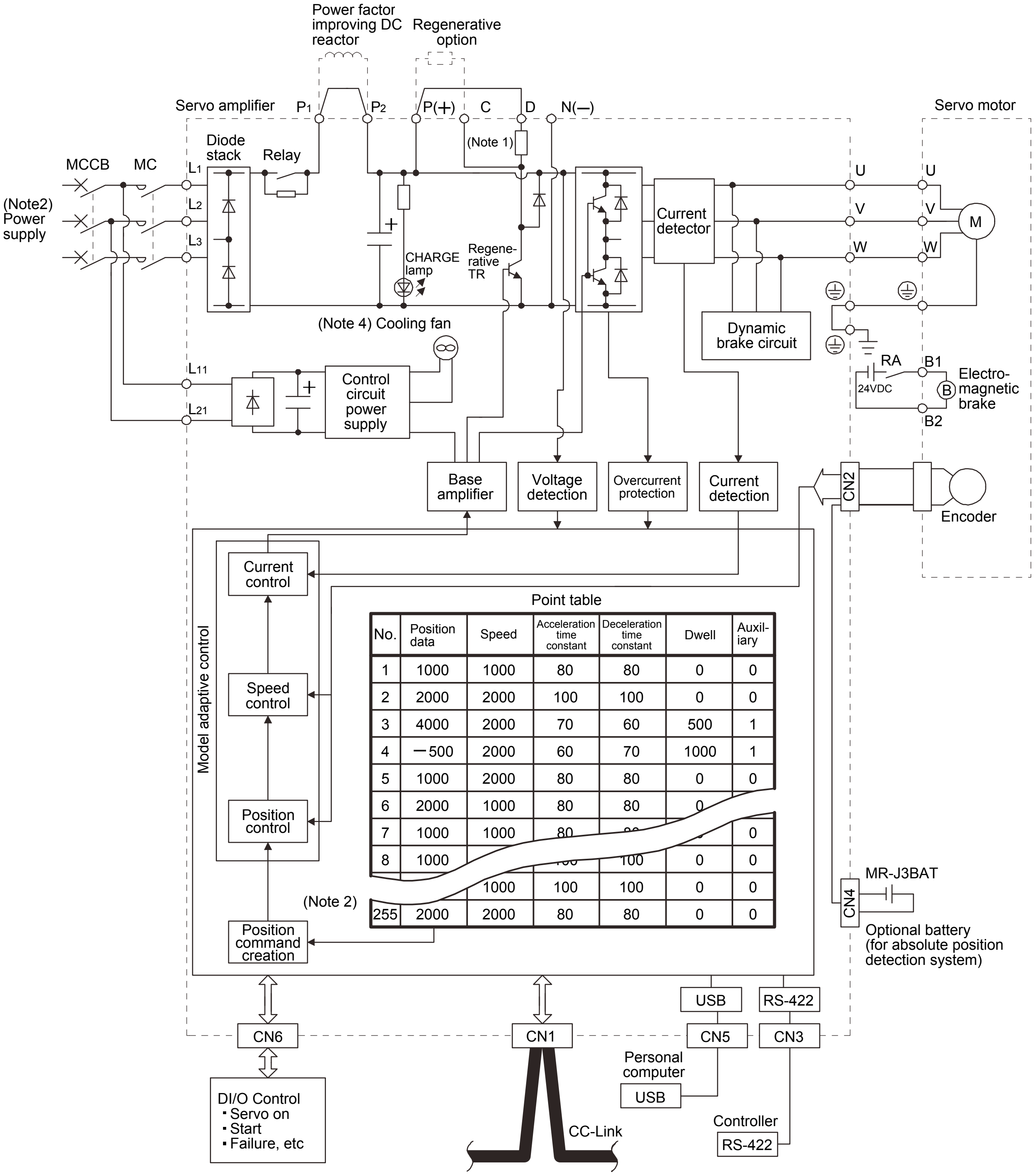

Point table

No.	Position data	Speed	Acceleration time constant	Deceleration time constant	Dwell	Auxil-iary
1	1000	1000	80	80	0	0
2	2000	2000	100	100	0	0
3	4000	2000	70	60	500	1
4	−500	2000	60	70	1000	1
5	1000	2000	80	80	0	0
6	2000	1000	80	80	0	
7	1000	1000	80			0
8	1000			100	0	0
		1000	100	100	0	0
255	2000	2000	80	80	0	0

Note 1. The built-in regenerative resistor is not provided for the MR-J3-10T (1).

2. For 1-phase 200 to 230VAC, connect the power supply to L_1, L_2 and leave L_3 open.
   There is no L_3 for 1-phase 100 to 120VAC power supply. Refer to section 1.2 for the power supply specification.

3. For the case when 2 stations are occupied. When 1 station is occupied, the point table ends at No.31.

4. Servo amplifiers MR-J3-70T or greater have a cooling fan.

(2) MR-J3-350T4 · MR-J3-500T(4) · MR-J3-700T(4)

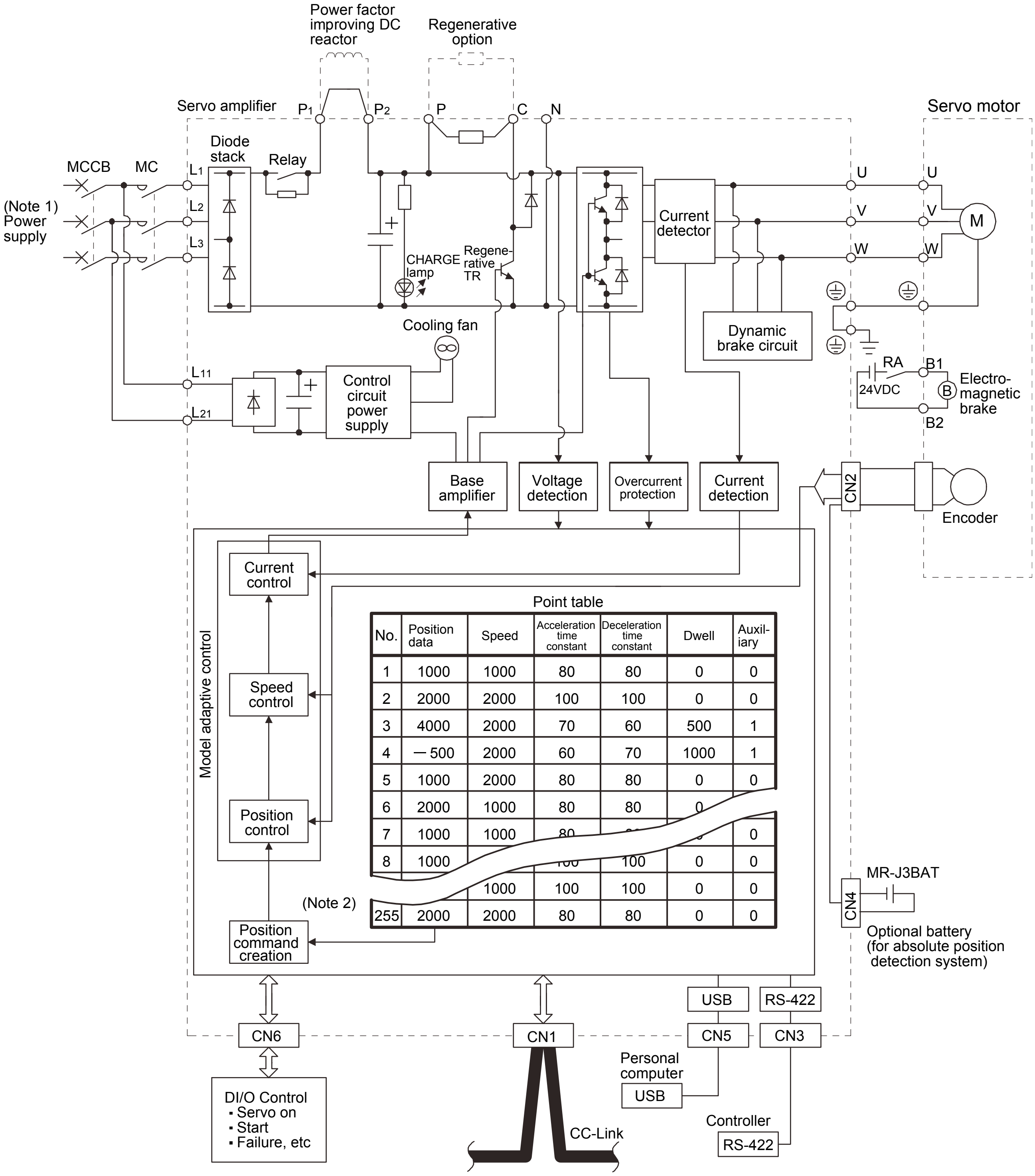

Point table

No.	Position data	Speed	Acceleration time constant	Deceleration time constant	Dwell	Auxil- iary
1	1000	1000	80	80	0	0
2	2000	2000	100	100	0	0
3	4000	2000	70	60	500	1
4	−500	2000	60	70	1000	1
5	1000	2000	80	80	0	0
6	2000	1000	80	80	0	
7	1000	1000	80			0
8	1000		100	100	0	0
		1000	100	100	0	0
255	2000	2000	80	80	0	0

Note 1. Refer to section 1.2 for the power supply specification.

2. For the case when 2 stations are occupied. When 1 station is occupied, the point table ends at No.31.

(3) MR-J3-11KT(4) to 22KT(4)

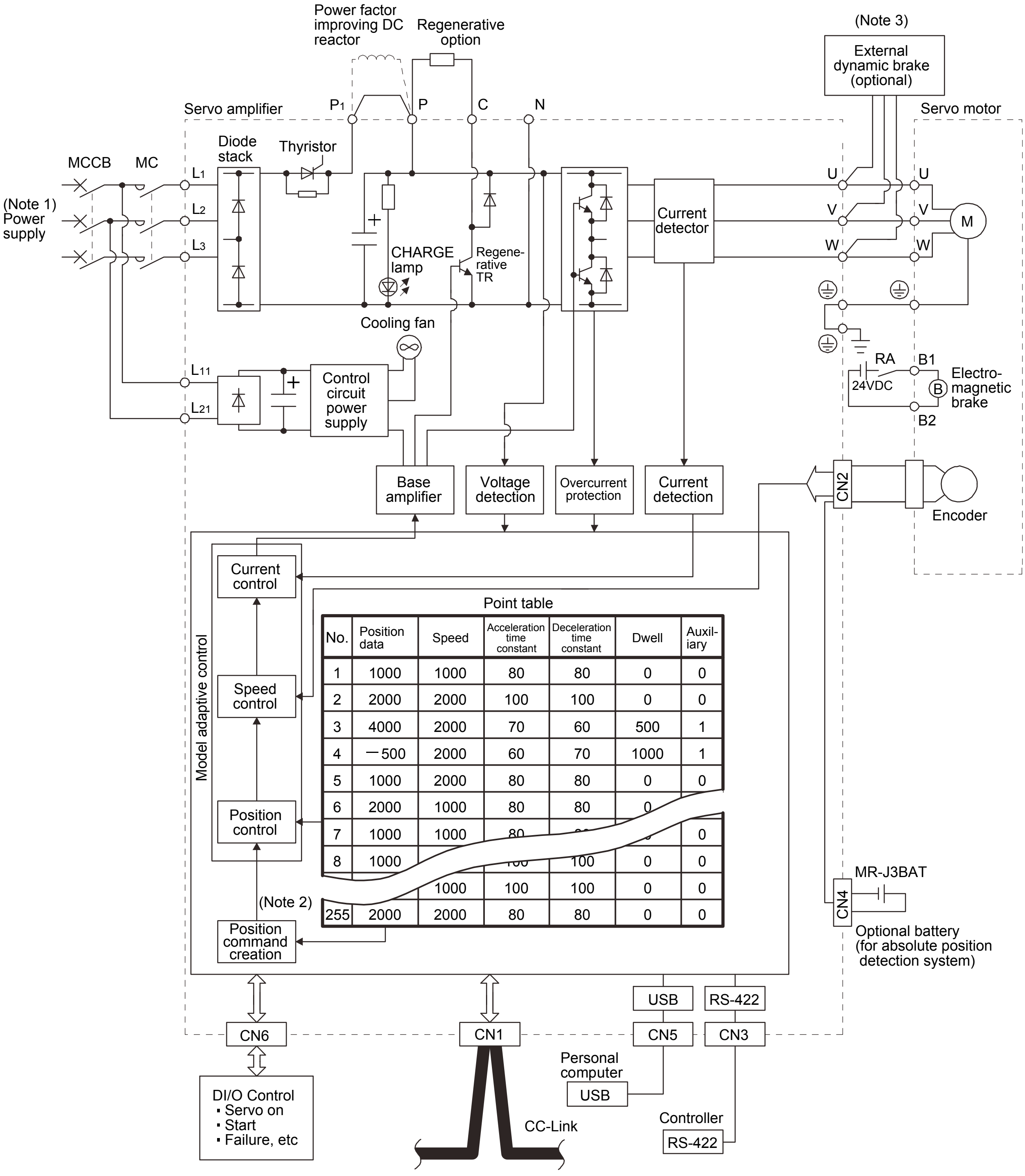

Point table

No.	Position data	Speed	Acceleration time constant	Deceleration time constant	Dwell	Auxil-iary
1	1000	1000	80	80	0	0
2	2000	2000	100	100	0	0
3	4000	2000	70	60	500	1
4	−500	2000	60	70	1000	1
5	1000	2000	80	80	0	0
6	2000	1000	80	80	0	
7	1000	1000	80			0
8	1000		100	100	0	0
		1000	100	100	0	0
255	2000	2000	80	80	0	0

Note 1. Refer to section 1.2 for the power supply specification.

2. For the case when 2 stations are occupied. When 1 station is occupied, the point table ends at No.31.

3. Use an external dynamic brake for this servo amplifier. Failure to do so will cause an accident because the servo motor does not stop immediately but coasts at emergency stop. Ensure the safety in the entire equipment.

1.1.3 System configuration

This section provides operations using this servo.
Use of CC-Link enables you to freely configure any system from a single-axis system to an up to 42-axis system.
Set the following values to the point table.

Name	Setting range	Unit
Position data	−999999 to 999999	×0.001[mm] × 0.01[mm] × 0.1[mm] × 1[mm]
Servo motor speed	0 to max. speed	[r/min]
Acceleration time constant	0 to 20000	[ms]
Deceleration time constant	0 to 20000	[ms]
Dwell	0 to 20000	[ms]
Auxiliary function	0 to 3 (Refer to section 4.2)	

There are 31 points of point tables to be used when 1 station is occupied and 255 points when 2 stations are occupied.

(1) Operation using CC-Link communication functions

(a) Operation

All devices can be controlled by CC-Link communication. Also, each point table setting, point table selection, parameter value change, setting, monitor, servo motor operation and others can be performed.

(b) Configuration

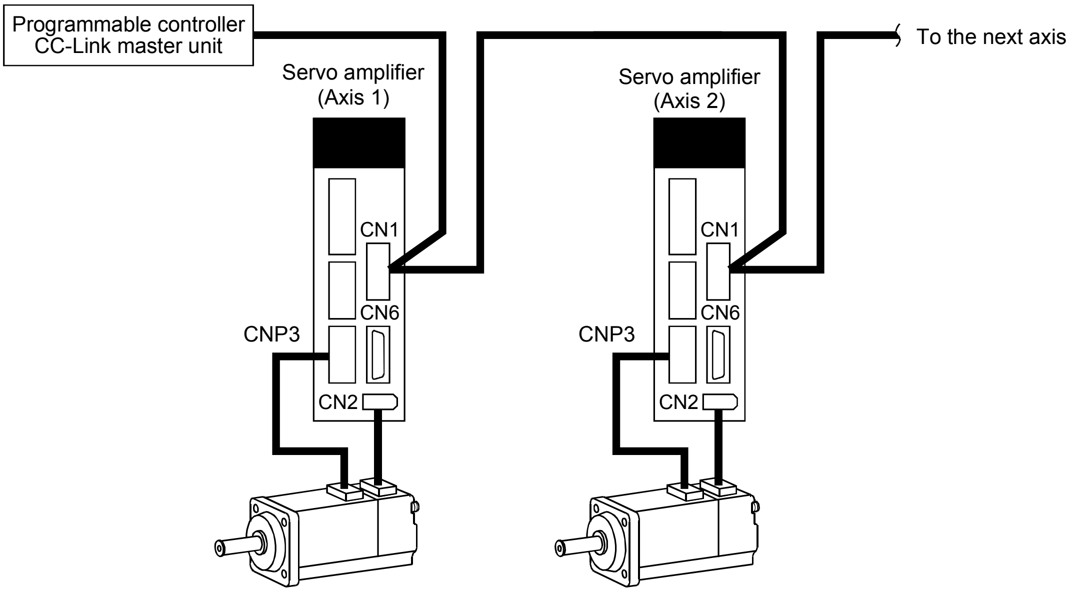

(2) Operation using CC-Link communication functions and external input signals

(a) Operation

Using parameter No.PD06 to PD08 and parameter No.PD12, PD14, input devices can be assigned to the external input devices of CN1A and CN1B. The signals assigned to the external input signals cannot be used with the CC-Link communication functions. Output devices can be used with the CN6 connectors and CC-Link communication functions simultaneously.

(b) Configuration

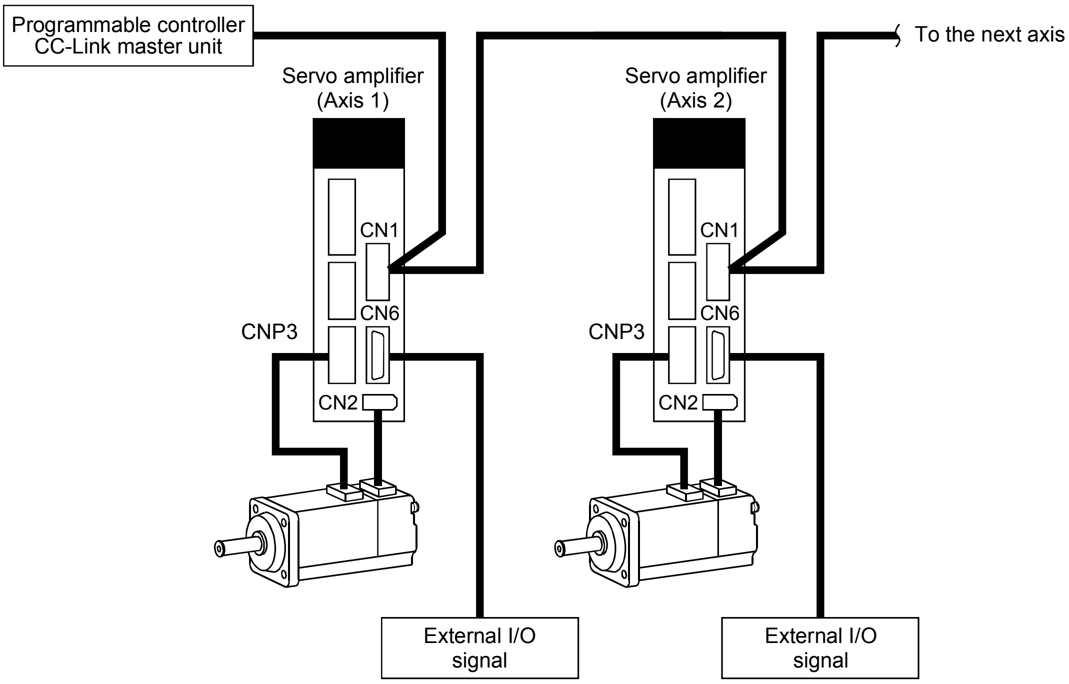

1.2 Servo amplifier standard specifications

(1) 200V class, 100V class

Item		Servo amplifier MR-J3-□	10T	20T	40T	60T	70T	100T	200TN	350T	500T	700T	11KT	15KT	22KT	10T1	20T1	40T1
Output		Rated voltage	3-phase 170VAC															
Output		Rated current [A]	1.1	1.5	2.8	3.2	5.8	6.0	11.0	17.0	28.0	37.0	68.0	87.0	126.0	1.1	1.5	2.8
Main circuit Power supply input	Voltage/frequency		3-phase or 1-phase 200 to 230VAC, 50/60Hz					3-phase 200 to 230VAC, 50/60Hz								1-phase 100V to 120VAC, 50/60Hz		
Main circuit Power supply input	Rated current [A]		0.9	1.5	2.6	(Note 4) 3.2	3.8	5.0	10.5	16.0	21.7	28.9	46.0	64.0	95.0	3.0	5.0	9.0
Main circuit Power supply input	Permissible voltage fluctuation		3-phase or 1-phase 200 to 230VAC: 170 to 253VAC					3-phase 170 to 253VAC								1-phase 85 to 132VAC		
Main circuit Power supply input	Permissible frequency fluctuation		Within ±5%															
Main circuit Power supply input	Power supply capacity		Refer to section 13.2															
Main circuit Power supply input	Inrush current		Refer to section 13.5															
Control circuit power supply input		Voltage, frequency	1-phase 200 to 230VAC, 50/60Hz													1-phase 100 to 120VAC, 50/60Hz		
Control circuit power supply input		Rated current [A]	0.2								0.3					0.4		
Control circuit power supply input		Permissible voltage fluctuation	1-phase 170 to 253VAC													1-phase 85 to 132VAC		
Control circuit power supply input		Permissible frequency fluctuation	Within ±5%															
Control circuit power supply input		Power consumption [W]	30								45					30		
Control circuit power supply input		Inrush current	Refer to section 13.5															
Interface power supply		Voltage	24VDC±10%															
Interface power supply		Power supply capacity [A]	(Note 1) 0.15															
Control System			Sine-wave PWM control, current control system															
Dynamic brake			Built-in								(Note 3) External option					Built-in		
Protective functions			Overcurrent shut-off, regenerative overvoltage shut-off, overload shut-off (electronic thermal relay), servo motor overheat protection, encoder error protection, regenerative brake error protection, undervoltage, instantaneous power failure protection, overspeed protection, excessive error protection															
Command system	Point table number input	Operational specifications	Positioning by specifying the point table No. (255 points)															
Command system	Point table number input	Position command input	Set in point table. 1-point feed length setting range: ±1[μm] to ±999.999[mm]															
Command system	Point table number input	Speed command input	Set in point table. Acceleration/deceleration time is set in point table. S-pattern acceleration/deceleration time constant is set in parameter No.PC13.															
Command system	Point table number input	System	Signed absolute value command system, incremental value command system, signed absolute value command/incremental value command specifying system															
Command system	Position command data input (when 2 stations are occupied)	Operational specifications	Remote register setting is used for positioning.															
Command system	Position command data input (when 2 stations are occupied)	Position command input	Remote register is used to set position command data. Feed length input setting range: ±1μm to ±999.999m															
Command system	Position command data input (when 2 stations are occupied)	Speed command input	Remote register is used to make selection from point table. Remote register is used to set speed command data (speed). S-pattern acceleration/deceleration time constant is set in parameter No.PC13.															
Command system	Position command data input (when 2 stations are occupied)	System	Signed absolute value command system, incremental value command system, signed absolute value command/incremental value command specifying system															
Operation mode	Automatic operation mode	Point table	Point table number input, position data input system Positioning operation is performed once in accordance with the position and speed commands.															
Operation mode	Automatic operation mode	Automatic continuous operation	Varied speed operation (2 to 255 speeds), automatic continuous positioning operation (2 to 255 points)															
Operation mode	Manual operation mode	Jog	Jog operation is performed in accordance with the parameter-set speed command by contact input or through CC-Link communication function.															
Operation mode	Manual operation mode	Manual pulse generator	Manual feed is made by manual pulse generator. Command pulse multiplication: ×1, ×10 or ×100 is selected using parameter.															

Item		Servo amplifier MR-J3-□	10T	20T	40T	60T	70T	100T	200TN	350T	500T	700T	11KT	15KT	22KT	10T1	20T1	40T1
Operation mode	Home position return mode	Dog type	Home position return is made starting with Z-phase pulse after passage of proximity dog. Home position address may be set. Home position shift distance may be set. Home position return direction may be selected. Automatic retract on dog back to home position/automatic stroke retract function.															
		Count type	Home position return is made by counting encoder pulses after contact with proximity dog. Home position address may be set. Home position shift value may be set. Home position return direction may be set. Automatic retract on dog back to home position/automatic stroke retract function.															
		Data setting type	Home position return is made without dog. Home position may be set at any position by manual operation, etc. Home position address may be set.															
		Stopper type	Home position return is made by pressing machine part against stroke end. Home position address may be set. Home position return direction may be set.															
		Home position ignorance (Servo-on position as home position)	Position where servo-on (RYn0) is switched on is defined as home position. Home position address may be set.															
		Dog type rear end reference	Home position return is made with respect to the rear end of a proximity dog. Home position address may be set. Home position shift value may be set. Home position return direction may be set. Automatic retract on dog back to home position/automatic stroke retract function.															
		Count type front end reference	Home position return is made with respect to the front end of a proximity dog. Home position address may be set. Home position shift value may be set. Home position return direction may be set. Automatic retract on dog back to home position/automatic stroke retract function.															
		Dog cradle type	Home position return is made with respect to the front end of a proximity dog by the first Z-phase pulse. Home position address may be set. Home position shift value may be set. Home position return direction may be set. Automatic retract on dog back to home position/automatic stroke retract function.															
		Dog type last Z-phase reference	Home position return is made with respect to the front end of a proximity dog by the last Z-phase pulse. Home position address may be set. Home position shift value may be set. Home position return direction may be set. Automatic retract on dog back to home position/automatic stroke retract function.															
		Dog type front end reference	Home position return is made to the dog front end with respect to the front end of a proximity dog. Home position address may be set. Home position shift value may be set. Home position return direction may be set. Automatic retract on dog back to home position/automatic stroke retract function.															
		Dogless Z-phase reference	Home position return is made with respect to the first Z-phase to the Z-phase. Home position address may be set. Home position shift value may be set. Home position return direction may be set.															
	Automatic positioning to home position		High-speed automatic return to a defined home position.															
Other functions			Absolute position detection, backlash function Overtravel prevention using external limit switch Software stroke limit															
Close mounting (Note 2)			○													○		
Structure			Natural-cooling, open (IP rating: IP00)				Force-cooling, open (IP rating: IP00)									Natural-cooling, Open (IP rating: IP00)		

Item			Servo amplifier MR-J3-□	10T	20T	40T	60T	70T	100T	200TN	350T	500T	700T	11KT	15KT	22KT	10T1	20T1	40T1
Environment	Ambient temperature	In operation	[℃]	0 to +55 (non-freezing)															
			[°F]	32 to +131 (non-freezing)															
		In storage	[℃]	－20 to +65 (non-freezing)															
			[°F]	－4 to +149 (non-freezing)															
	Ambient humidity	In operation		90%RH or less (non-condensing)															
		In storage																	
	Ambient			Indoors (no direct sunlight) Free from corrosive gas, flammable gas, oil mist, dust and dirt															
	Altitude			Max. 1000m above sea level															
	Vibration resistance			5.9m/s^2, 10 to 55Hz (directions of X, Y and Z axes)															
Mass			[kg]	0.8	0.8	1.0	1.0	1.4	1.4	2.1	2.3	4.6	6.2	18	18	19	0.8	0.8	1.0
			[lb]	1.76	1.76	2.21	2.21	3.09	3.09	4.63	5.07	10.1	13.7	39.7	39.7	41.9	1.76	1.76	2.21

Note 1. 0.15A is the value applicable when all I/O signals are used. The current capacity can be decreased by reducing the number of I/O points.

2. Operate them at the ambient temperatures of 0 to 45°C (32 to 113°F) or at 75% or smaller effective load ratio.

3. Use an external dynamic brake for this servo amplifier. Failure to do so will cause an accident because the servo motor does not stop immediately but coasts at emergency stop. Ensure the safety in the entire equipment.

4. When a UL/cUL- compliant servo motor is used in combination, the value is 2.9A.

(2) 400V class

<table>
<tr><td colspan="3">Servo amplifier MR-J3-□
Item</td><td>60T4</td><td>100T4</td><td>200T4</td><td>350T4</td><td>500T4</td><td>700T4</td><td>11KT4</td><td>15KT4</td><td>22KT4</td></tr>
<tr><td colspan="2" rowspan="2">Output</td><td>Rated voltage</td><td colspan="9">3-phase 323VAC</td></tr>
<tr><td>Rated current [A]</td><td>1.5</td><td>2.8</td><td>5.4</td><td>8.6</td><td>14.0</td><td>17.0</td><td>32.0</td><td>41.0</td><td>63.0</td></tr>
<tr><td rowspan="6">Main circuit Power supply Input</td><td colspan="2">Voltage/frequency</td><td colspan="9">3-phase 380 to 480VAC, 50/60Hz</td></tr>
<tr><td colspan="2">Rated current [A]</td><td>1.4</td><td>2.5</td><td>5.1</td><td>7.9</td><td>10.8</td><td>14.4</td><td>23.1</td><td>31.8</td><td>47.6</td></tr>
<tr><td colspan="2">Permissible voltage fluctuation</td><td colspan="9">3-phase 323 to 528VAC</td></tr>
<tr><td colspan="2">Permissible frequency fluctuation</td><td colspan="9">Within ±5%</td></tr>
<tr><td colspan="2">Power supply capacity</td><td colspan="9">Refer to section 13.2</td></tr>
<tr><td colspan="2">Inrush current</td><td colspan="9">Refer to section 13.5</td></tr>
<tr><td colspan="2" rowspan="6">Control circuit power supply Input</td><td>Voltage, frequency</td><td colspan="9">1-phase 380 to 480VAC, 50/60Hz</td></tr>
<tr><td>Rated current [A]</td><td colspan="3">0.1</td><td colspan="6">0.2</td></tr>
<tr><td>Permissible voltage fluctuation</td><td colspan="9">1-phase 323 to 528VAC</td></tr>
<tr><td>Permissible frequency fluctuation</td><td colspan="9">Within ±5%</td></tr>
<tr><td>Power Consumption [W]</td><td colspan="3">30</td><td colspan="6">45</td></tr>
<tr><td>Inrush current</td><td colspan="9">Refer to section 13.5</td></tr>
<tr><td colspan="2" rowspan="2">Interface power supply</td><td>Voltage</td><td colspan="9">24VDC ±10%</td></tr>
<tr><td>Power supply capacity [A]</td><td colspan="9">(Note 1) 0.15</td></tr>
<tr><td colspan="3">Control System</td><td colspan="9">Sine-wave PWM control, current control system</td></tr>
<tr><td colspan="3">Dynamic brake</td><td colspan="6">Built-in</td><td colspan="3">(Note 2) External option</td></tr>
<tr><td colspan="3">Protective functions</td><td colspan="9">Overcurrent shut-off, regenerative overvoltage shut-off, overload shut-off (electronic thermal relay), servo motor overheat protection, encoder error protection, regenerative brake error protection, undervoltage, instantaneous power failure protection, overspeed protection, excessive error protection</td></tr>
<tr><td rowspan="8">Command system</td><td rowspan="4">Point table number input</td><td>Operational specifications</td><td colspan="9">Positioning by specifying the point table No. (255 points)</td></tr>
<tr><td>Position command input</td><td colspan="9">Set in point table. 1-point feed length setting range: ±1[μm] to ±999.999[mm]</td></tr>
<tr><td>Speed command input</td><td colspan="9">Set in point table. Acceleration/deceleration time is set in point table.
S-pattern acceleration/deceleration time constant is set in parameter No.PC13.</td></tr>
<tr><td>System</td><td colspan="9">Signed absolute value command system, incremental value command system, signed absolute value command/incremental value command specifying system</td></tr>
<tr><td rowspan="4">Position command data input (when 2 stations are occupied)</td><td>Operational specifications</td><td colspan="9">Remote register setting is used for positioning.</td></tr>
<tr><td>Position command input</td><td colspan="9">Remote register is used to set position command data.
Feed length input setting range: ±1μm to ±999.999m</td></tr>
<tr><td>Speed command input</td><td colspan="9">Remote register is used to make selection from point table.
Remote register is used to set speed command data (speed).
S-pattern acceleration/deceleration time constant is set in parameter No.PC13.</td></tr>
<tr><td>System</td><td colspan="9">Signed absolute value command system, incremental value command system, signed absolute value command/incremental value command specifying system</td></tr>
<tr><td rowspan="4">Operation mode</td><td rowspan="2">Automatic operation mode</td><td>Point table</td><td colspan="9">Point table number input, position data input system
Positioning operation is performed once in accordance with the position and speed commands.</td></tr>
<tr><td>Automatic continuous operation</td><td colspan="9">Varied speed operation (2 to 255 speeds), automatic continuous positioning operation (2 to 255 points)</td></tr>
<tr><td rowspan="2">Manual operation mode</td><td>Jog</td><td colspan="9">Jog operation is performed in accordance with the parameter-set speed command by contact input or through CC-Link communication function.</td></tr>
<tr><td>Manual pulse generator</td><td colspan="9">Manual feed is made by manual pulse generator.
Command pulse multiplication: ×1, ×10 or ×100 is selected using parameter.</td></tr>
</table>

Item		Servo amplifier MR-J3-□	60T4	100T4	200T4	350T4	500T4	700T4	11KT4	15KT4	22KT4
Operation mode	Home position return mode	Dog type	Home position return is made starting with Z-phase pulse after passage of proximity dog. Home position address may be set. Home position shift distance may be set. Home position return direction may be selected. Automatic retract on dog back to home position automatic stroke retract function.								
		Count type	Home position return is made by counting encoder pulses after contact with proximity dog. Home position address may be set. Home position shift value may be set. Home position return direction may be set. Automatic retract on dog back to home position automatic stroke retract function.								
		Data setting type	Home position return is made without dog. Home position may be set at any position by manual operation, etc. Home position address may be set.								
		Stopper type	Home position return is made by pressing machine part against stroke end. Home position address may be set. Home position return direction may be set.								
		Home position ignorance (Servo-on position as home position)	Position where servo-on (RYn0) is switched on is defined as home position. Home position address may be set.								
		Dog type rear end reference	Home position return is made with respect to the rear end of a proximity dog. Home position address may be set. Home position shift value may be set. Home position return direction may be set. Automatic retract on dog back to home position automatic stroke retract function.								
		Count type front end reference	Home position return is made with respect to the front end of a proximity dog. Home position address may be set. Home position shift value may be set. Home position return direction may be set. Automatic retract on dog back to home position automatic stroke retract function.								
		Dog cradle type	Home position return is made with respect to the front end of a proximity dog by the first Z-phase pulse. Home position address may be set. Home position shift value may be set. Home position return direction may be set. Automatic retract on dog back to home position automatic stroke retract function.								
		Dog type last Z-phase reference	Home position return is made with respect to the front end of a proximity dog by the last Z-phase pulse. Home position address may be set. Home position shift value may be set. Home position return direction may be set. Automatic retract on dog back to home position automatic stroke retract function.								
		Dog type front end reference	Home position return is made to the dog front end with respect to the front end of a proximity dog. Home position address may be set. Home position shift value may be set. Home position return direction may be set. Automatic retract on dog back to home position automatic stroke retract function.								
		Dogless Z-phase reference	Home position return is made with respect to the first Z-phase to the Z-phase. Home position address may be set. Home position shift value may be set. Home position return direction may be set.								
	Automatic positioning to home position		High-speed automatic return to a defined home position.								
Other functions			Absolute position detection, backlash function Overtravel prevention using external limit switch Software stroke limit								
Structure			Natural-cooling, Open (IP rating: IP00)		Force-cooling, open (IP rating: IP00)						

Item			Servo amplifier MR-J3-□	60T4	100T4	200T4	350T4	500T4	700T4	11KT4	15KT4	22KT4
Environment	Ambient temperature	In operation	[℃]	0 to +55 (non-freezing)								
			[°F]	32 to +131 (non-freezing)								
		In storage	[℃]	－20 to +65 (non-freezing)								
			[°F]	－4 to +149 (non-freezing)								
	Ambient humidity	In operation		90%RH or less (non-condensing)								
		In storage										
	Ambient			Indoors (no direct sunlight) Free from corrosive gas, flammable gas, oil mist, dust and dirt								
	Altitude			Max. 1000m above sea level								
	Vibration resistance			5.9 m/s^2, 10to 55Hz (directions of X, Y and Z axes)								
Mass			[kg]	1.7	1.7	2.1	4.6	4.6	6.2	18	18	19

Note 1. 0.15A is the value applicable when all I/O signals are used. The current capacity can be decreased by reducing the number of I/O points.

2. Use an external dynamic brake for this servo amplifier. Failure to do so will cause an accident because the servo motor does not stop immediately but coasts at emergency stop. Ensure the safety in the entire equipment.

1.3 Function list

The following table lists the functions of this servo. For details of the functions, refer to the reference field.

Function	Description	Reference
Positioning by automatic operation	Select the required ones from among 31 preset point tables and perform operation in accordance with the set values. Use the external input signal or communication function to choose the point tables.	Section 5.4
Varied speed operation	Servo motor speed can be varied continuously until the preset moving distance is reached. (Max. set speeds: 255 speeds)	Section 5.4.2 (4)(b)
Automatic continuous positioning operation	By merely choosing one point table and starting operation, positioning can be executed continuously in accordance with several point tables.	Section 5.4.2 (4)
Home position return	Dog type, count type, data setting type, stopper type, home position ignorance, dog type rear end reference, count type front end reference, dog cradle type	Section 5.6
High-resolution encoder	High-resolution encoder of 262144 pulses/rev is used as a servo motor encoder.	
Absolute position detection system	By merely setting the home position once, home position return need not be done at each power on.	Section 5.7
Gain switching function	You can switch between gains during rotation and gains during stop or use an input device to change gains during operation.	Section 10.6
Advanced vibration suppression control	This function suppresses vibration at the arm end or residual vibration.	Section 10.4
Adaptive filter Ⅱ	Servo amplifier detects mechanical resonance and sets filter characteristics automatically to suppress mechanical vibration.	Section 10.2
Low-pass filter	Suppresses high-frequency resonance which occurs as servo system response is increased.	Section 10.5
Machine analyzer function	Analyzes the frequency characteristic of the mechanical system by simply connecting a MR Configurator installed personal computer and servo amplifier. MR Configurator is necessary for this function.	
Machine simulation	Can simulate machine motions on a personal computer screen on the basis of the machine analyzer results. MR Configurator is necessary for this function.	
Gain search function	An MR Configurator installed personal computer changes gains automatically and searches for overshoot-free gains in a short time. MR Configurator is necessary for this function.	
Robust disturbance compensation	For roll feed axis, etc. of which a response level cannot be increased because of the large load to motor inertia ratio, this function improves a disturbance response. MR Configurator is necessary for this function.	
Advanced gain search	Advanced gain search automatically searches for the optimum parameter for settle time to be short. The gain can be adjusted by setting sequentially in accordance with wizard screens. MR Configurator is necessary for this function.	
Slight vibration suppression control	Suppresses vibration of ±1 pulse produced at a servo motor stop.	Parameters No. PB24
Electronic gear	The electronic gear is used to make adjustment so that the servo amplifier setting matches the machine moving distance. Also, changing the electronic gear value allows the machine to be moved at any multiplication ratio to the moving distance using the servo amplifier.	Parameter No. PA06, PA07
Auto tuning	Automatically adjusts the gain to optimum value if load applied to the servo motor shaft varies.	Section 9.2
S-pattern acceleration/deceleration time constant	Acceleration/deceleration can be made smoothly.	Parameters No. PC13
Regenerative option	Used when the built-in regenerative resistor of the servo amplifier does not have sufficient regenerative capability for the regenerative power generated.	Section 14.2
Brake unit	Used when the regenerative option cannot provide enough regenerative power. Can be used with the servo amplifier of 5kW or more.	Section 14.3
Regeneration converter	Used when the regenerative option cannot provide enough regenerative power. Can be used with the servo amplifier of 5kW or more.	Section 14.4
Alarm history clear	Alarm history is cleared.	Parameter No. PC18

Function	Description	Reference
Input signal selection (Device setting)	The input devices including Servo-on (SON) can be assigned to certain pins of the CN6 connector.	Parameter No. PD06 to PD08 PD12 ・ PD14
Output signal selection (device settings)	The output devices including Malfunction (ALM) and Dynamic brake interlock (DB) can be assigned to certain pins of the CN6 connector.	Parameter No. PD09 to PD011
Torque limit	Servo motor-torque is limited.	Section 4.6.3 Section 6.1.11
Output signal (DO) forced output	Output signal can be forced on/off independently of the servo status. Use this function for output signal wiring check, etc.	Section 7.7.4 Section 8.5.7(4)
Test operation mode	JOG operation ・ positioning operation ・ DO forced output ・ single - step feed. MR Configurator is necessary for this function.	Section 7.7 Section 8.5.7
Limit switch	The servo motor travel region can be limited using the forward rotation stroke end (LSP)/reverse rotation stroke end (LSN).	
Software limit	The travel region is limited using parameters in terms of address. The function similar to that of a limit switch is limited by parameter.	Section 6.3.6

1.4 Model code definition

(1) Rating plate

The following shows an example of rating plate for explanation of each item.

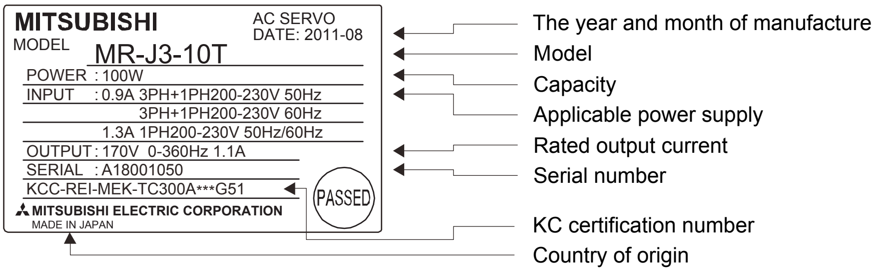

(2) Model

The following describes what each block of a model name indicates. Not all combinations of the symbols are available.

MR－J3－□T□□

Series

Rated output

Symbol	Rated output [kW]
10	0.1
20	0.2
40	0.4
60	0.6
70	0.75
100	1
200	2
350	3.5
500	5
700	7
11K	11
15K	15
22K	22

Built-in positioning function

Power supply

Symbol	Power supply
None	3-phase or 1-phase 200 to 230VAC
1	1-phase 100 to 120VAC
4	3-phase 380 to 480VAC

Special specification

Symbol	Special specification	Supplied regenerative resistor
-PX	11k to 22kW servo amplifiers (Excluding the servo amplifiers designed for HF-JP series servo motors of 11k/15kW)	None
-LR	Servo amplifiers designed for HF-JP series servo motors of 11k/15kW	accessory
-LW		None

1.5 Combination with servo motor

The following table lists combinations of servo amplifiers and servo motors. The same combinations apply to the servo motors with an electromagnetic brakes and the servo motors with a reduction gear.

Servo amplifier	Servo motors						
	HF-MP□	HF-KP□	HF-SP□		HC-RP□	HC-UP□	HC-LP□
			1000r/min	2000r/min			
MR-J3-10T (1)	053・13	053・13					
MR-J3-20T (1)	23	23					
MR-J3-40T (1)	43	43					
MR-J3-60T			51	52			52
MR-J3-70T	73	73				72	
MR-J3-100T			81	102			102
MR-J3-200TN			121・201	152・202	103・153	152	152
MR-J3-350T			301	352	203	202	202
MR-J3-500T			421	502	353・503	352・502	302
MR-J3-700T				702			

Servo amplifier	Servo motors				
	HA-LP□			HF-JP□	
	1000r/min	1500r/min	2000r/min	1500r/min	3000r/min
MR-J3-60T					53
MR-J3-70T					73
MR-J3-100T					103
MR-J3-200TN					153・203
MR-J3-350T					353
MR-J3-500T			502		503
MR-J3-700T	601	701M	702	11K1M (Note)	703
MR-J3-11KT	801・12K1	11K1M	11K2	15K1M (Note)	903
MR-J3-15KT	15K1	15K1M	15K2		
MR-J3-22KT	20K1・25K1	22K1M	22K2		

Servo amplifier	Servo motors					
	HF-SP□	HA-LP□			HF-JP□	
		1000r/min	1500r/min	2000r/min	1500r/min	3000r/min
MR-J3-60T4	524					534
MR-J3-100T4	1024					734・1034
MR-J3-200T4	1524・2024					1534・2034
MR-J3-350T4	3524					3534
MR-J3-500T4	5024					5034
MR-J3-700T4	7024	6014	701M4			7034
MR-J3-11KT4		8014・12K14	11K1M4	11K24	11K1M4 (Note)	9034
MR-J3-15KT4		15K14	15K1M4	15K24	15K1M4 (Note)	
MR-J3-22KT4		20K14	22K1M4	22K24		

Note. The servo amplifiers, which support these servo motors, have "-LR" at the end of their model names.

Servo amplifiers supporting the 400% maximum torque setting	Servo motors (Note)
	HF-JP□
MR-J3-100T	53
MR-J3-200TN	73
	103
MR-J3-350T	153
	203
MR-J3-500T	353
MR-J3-700T	503

Servo amplifiers supporting the 400% maximum torque setting	Servo motors (Note)
	HF-JP□
MR-J3-100T4	534
MR-J3-200T4	734
	1034
MR-J3-350T4	1534
	2034
MR-J3-500T4	3534
MR-J3-700T4	5034

Note. The 400% maximum torque can be supported by combining servo amplifier manufactured in April 2010 or later (software version A8 or later) with HF-JP servo motor manufactured in April 2010 or later.

1.6 Structure

1.6.1 Parts identification

(1) MR-J3-100T or less

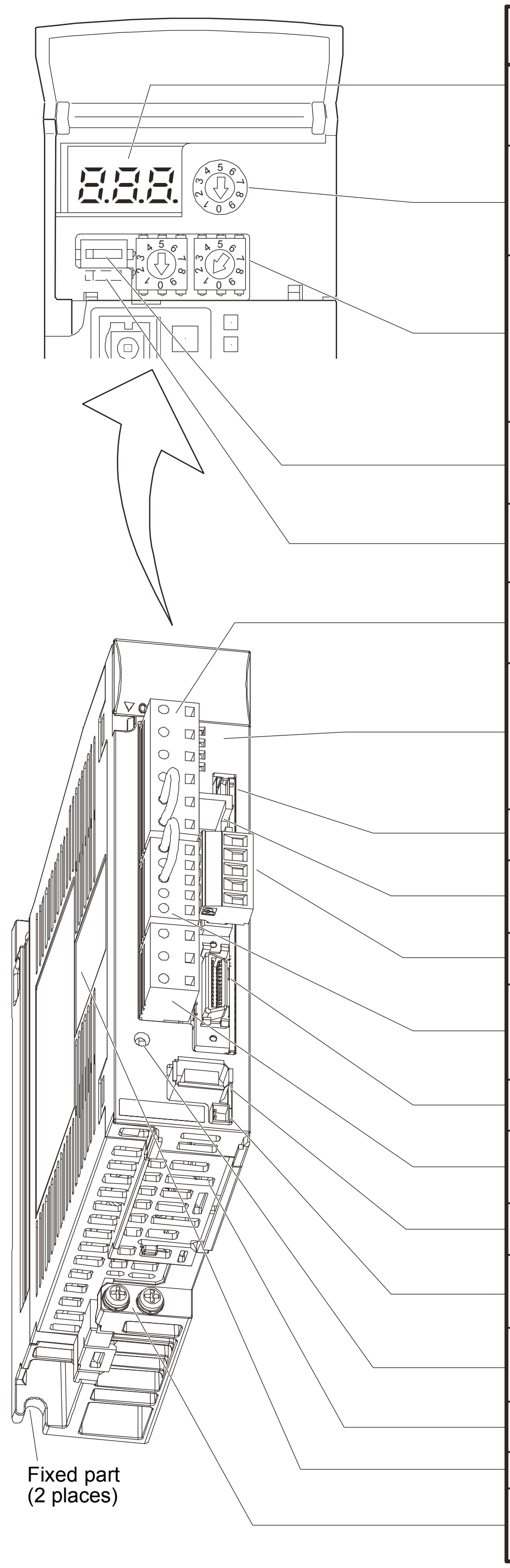

Name/Application	Detailed explanation
Display The 3-digit, seven-segment LED shows the servo status and alarm number.	Section 5.3 Chapter 11
Baud rate switch (MODE) 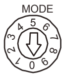 Select the CC-Link communication baud rate.	Section 3.2.4
Station number switches (STATION NO.) Set the station number of the servo amplifier. 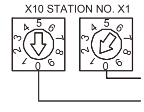 Set the one place. Set the ten place.	Section 3.2.3
Occupied station count switch (SW1) SW1 Set the number of occupied stations.	Section 3.2.5
Switch for manufacturer setting (SW2) SW2 Do not change the default setting (left).	
Main circuit power supply connector (CNP1) Used to connect the input power supply.	Section 4.1 Section 4.3 Section 12.1
Communication alarm display section Indicates alarms in CC-Link communication. ■ L.RUN ■ SD ■ RD ■ L.ERR	Section 11.3
USB communication connector (CN5) Used to connect the personal computer.	Chapter 7
RS-422 communication connector (CN3) Used to connect the MR-PRU03 parameter unit or personal computer.	Chapter 7 Chapter 8 Chapter 15
CC-Link connector (CN1) Wire the CC-Link cable.	Section 3.2.2
Control circuit connector (CNP2) Used to connect the control circuit power supply/ regenerative option.	Section 4.1 Section 4.3 Section 12.1 Section 14.2
I/O signal connector (CN6) Used to connect digital I/O signals.	Section 4.2 Section 4.4
Servo motor power output connector (CNP3) Used to connect the servo motor.	Section 4.1 Section 4.3 Section 12.1
Encoder connector (CN2) Used to connect the servo motor encoder.	Section 4.10 Section 14.1
Battery connector (CN4) Used to connect the battery for absolute position data backup.	Section 5.8 Section 14.7
Charge lamp Lit to indicate that the main circuit is charged. While this lamp is lit, do not reconnect the cables.	
Battery holder Contains the battery for absolute position data backup.	Section 5.8
Rating plate	Section 1.4
Protective earth (PE) terminal (⏚) Grounding terminal.	Section 4.1 Section 4.3 Section 12.1

(2) MR-J3-200TN ・MR-J3-200T4 or less

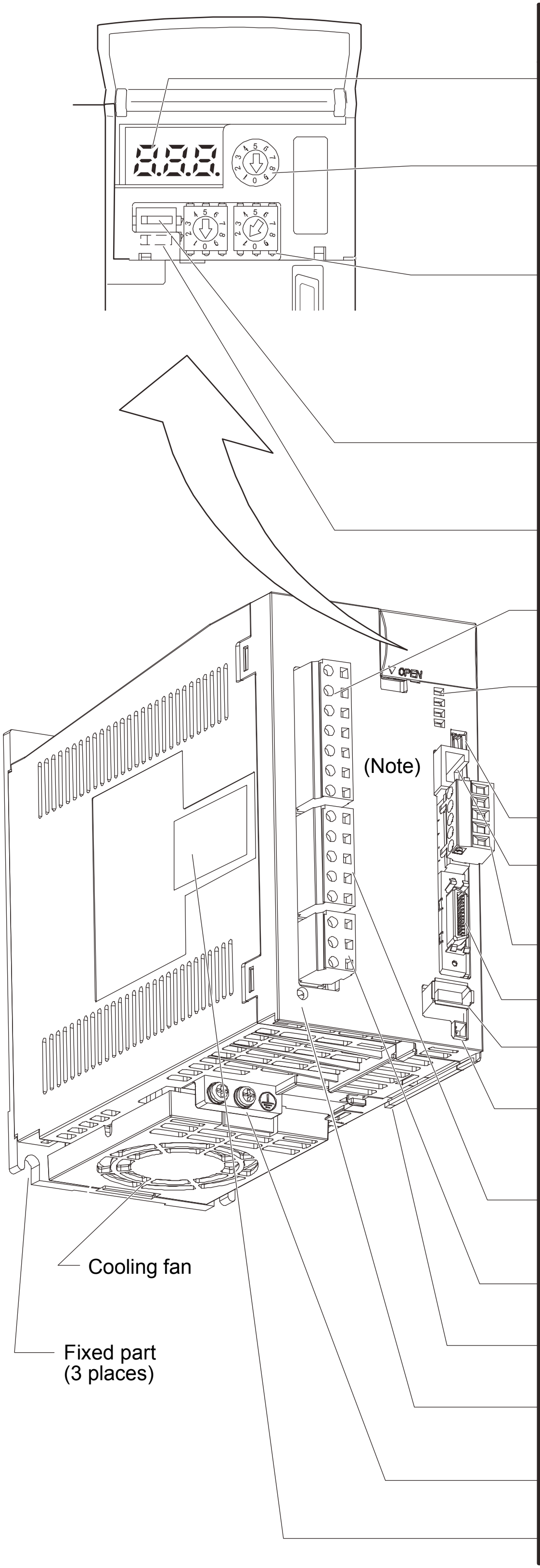

Name/Application	Detailed explanation
Display The 3-digit, seven-segment LED shows the servo status and alarm number.	Section 5.3 Chapter 11
Baud rate switch (MODE) 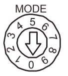 Select the CC-Link communication baud rate.	Section 3.2.4
Station number switches (STATION NO.) Set the station number of the servo amplifier. 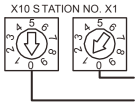 Set the one place. Set the ten place.	Section 3.2.3
Occupied station count switch (SW1) 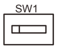 Set the number of occupied stations.	Section 3.2.5
Switch for manufacturer setting (SW2) 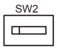 Do not change the default setting (left).	
Main circuit power supply connector (CNP1) Used to connect the input power supply.	Section 4.1 Section 4.3 Section 12.1
Communication alarm display section Indicates alarms in CC-Link communication. ■ L.RUN ■ SD ■ RD ■ L.ERR	Section 11.3
USB communication connector (CN5) Used to connect the personal computer.	Chapter 7
RS-422 communication connector (CN3) Used to connect the MR-PRU03 parameter unit or personal computer.	Chapter 7 Chapter 8 Chapter 15
CC-Link connector (CN1) Wire the CC-Link cable.	Section 3.2.2
I/O signal connector (CN6) Used to connect digital I/O signals.	Section 4.2 Section 4.4
Encoder connector (CN2) Used to connect the servo motor encoder.	Section 4.10 Section 14.1
Battery connector (CN4) Used to connect the battery for absolute position data backup.	Section 5.8 Section 14.7
Control circuit connector (CNP2) Used to connect the control circuit power supply/ regenerative option.	Section 4.1 Section 4.3 Section 12.1 Section 14.2
Servo motor power output connector (CNP3) Used to connect the servo motor.	Section 4.1 Section 4.3 Section 12.1
Battery holder Contains the battery for absolute position data backup.	Section 5.8
Charge lamp Lit to indicate that the main circuit is charged. While this lamp is lit, do not reconnect the cables.	
Protective earth (PE) terminal (⏚) Grounding terminal.	Section 4.1 Section 4.3 Section 12.1
Rating plate	Section 1.4

Note. Connectors (CNP1, CNP2, and CNP3) and appearance of MR-J3-200T servo amplifier have been changed from January 2008 production. Model name of the existing servo amplifier is changed to MR-J3-200T-RT. For MR-J3-200T-RT, refer to appendix 5.

(3) MR-J3-350T

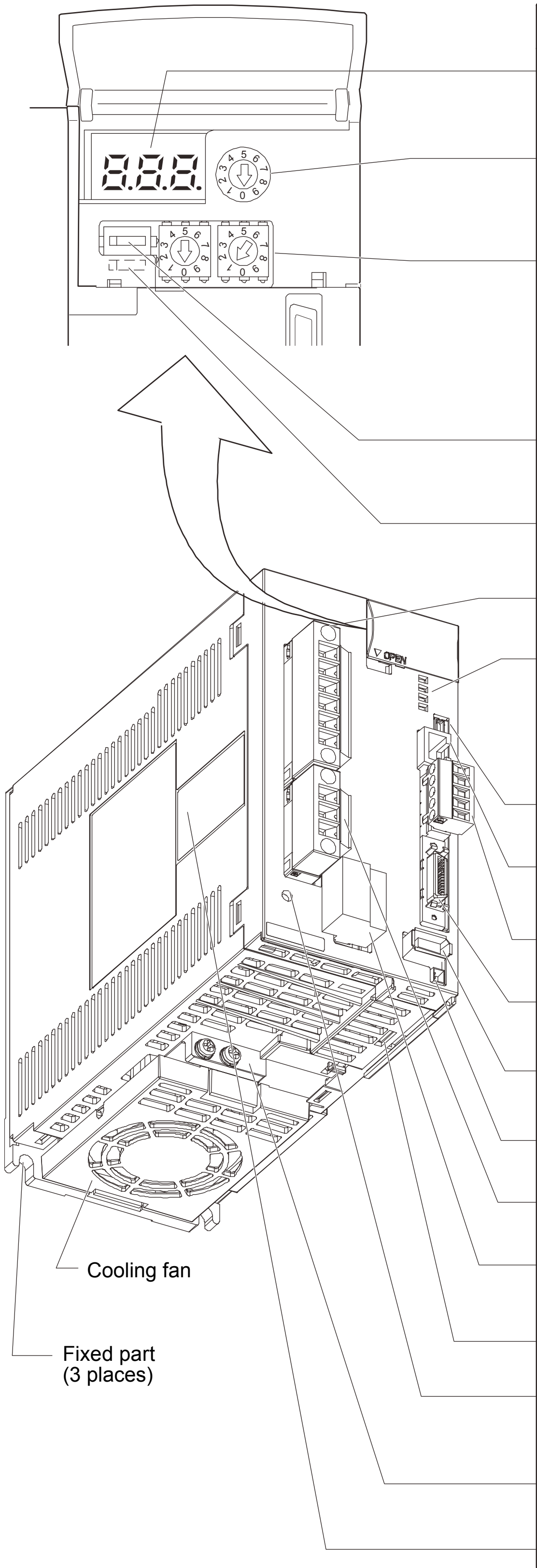

Name/Application	Detailed explanation
Display The 3-digit, seven-segment LED shows the servo status and alarm number.	Section 5.3 Chapter 11
Baud rate switch (MODE) 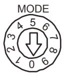 Select the CC-Link communication baud rate.	Section 3.2.4
Station number switches (STATION NO.) Set the station number of the servo amplifier. 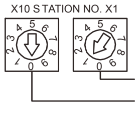 Set the one place. Set the ten place.	Section 3.2.3
Occupied station count switch (SW1) 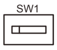 Set the number of occupied stations.	Section 3.2.5
Switch for manufacturer setting (SW2) 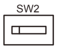 Do not change the default setting (left).	
Main circuit power supply connector (CNP1) Used to connect the input power supply.	Section 4.1 Section 4.3 Section 12.1
Communication alarm display section Indicates alarms in CC-Link communication. ■ L.RUN ■ SD ■ RD ■ L.ERR	Section 11.3
USB communication connector (CN5) Used to connect the personal computer.	Chapter 7
RS-422 communication connector (CN3) Used to connect the MR-PRU03 parameter unit or personal computer.	Chapter 7 Chapter 8 Chapter 15
CC-Link connector (CN1) Wire the CC-Link cable.	Section 3.2.2
I/O signal connector (CN6) Used to connect digital I/O signals.	Section 4.2 Section 4.4
Encoder connector (CN2) Used to connect the servo motor encoder.	Section 4.10 Section 14.1
Battery connector (CN4) Used to connect the battery for absolute position data backup.	Section 5.8 Section 14.7
Servo motor power output connector (CNP3) Used to connect the servo motor.	Section 4.1 Section 4.3 Section 12.1
Control circuit connector (CNP2) Used to connect the control circuit power supply/ regenerative option.	Section 4.1 Section 4.3 Section 12.1 Section 14.2
Battery holder Contains the battery for absolute position data backup.	Section 5.8
Charge lamp Lit to indicate that the main circuit is charged. While this lamp is lit, do not reconnect the cables.	
Protective earth (PE) terminal (⏚) Grounding terminal.	Section 4.1 Section 4.3 Section 12.1
Rating plate	Section 1.4

(4) MR-J3-350T4 · MR-J3-500T(4)

POINT

- The servo amplifier is shown without the front cover. For removal of the front cover, refer to section 1.6.2.

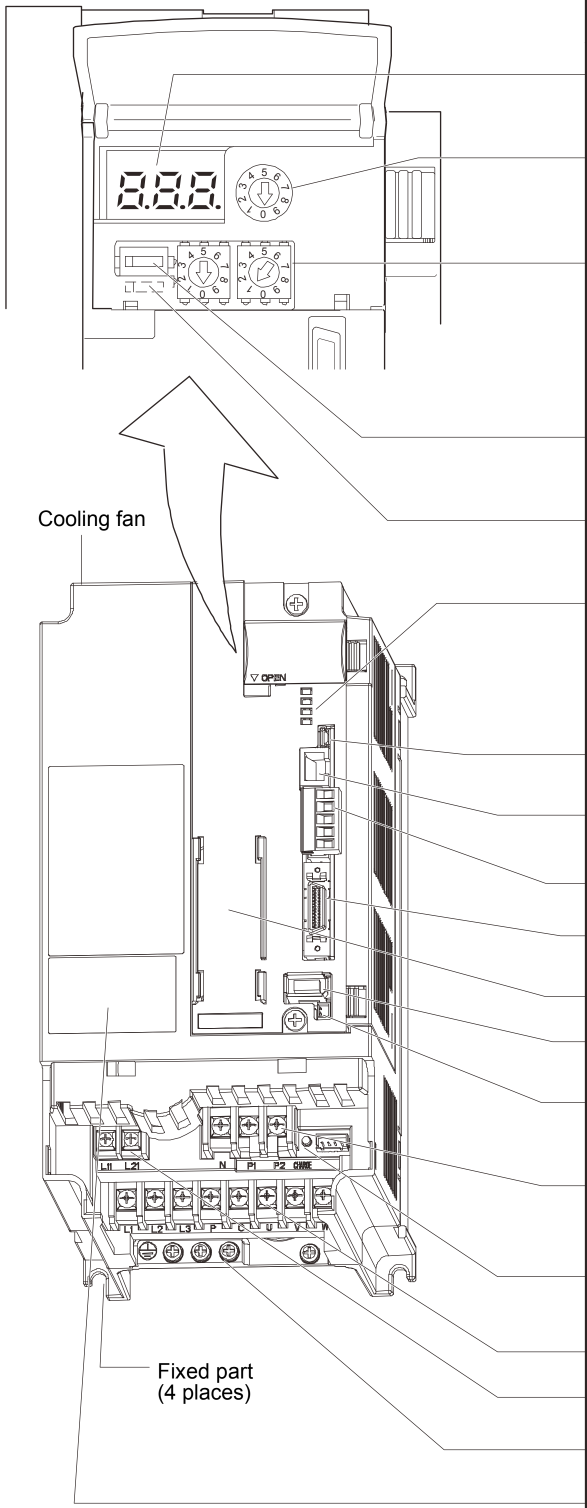

Name/Application	Detailed explanation
Display The 3-digit, seven-segment LED shows the servo status and alarm number.	Section 5.3 Chapter 11
Baud rate switch (MODE) 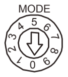 Select the CC-Link communication baud rate.	Section 3.2.4
Station number switches (STATION NO.) Set the station number of the servo amplifier. 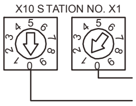 Set the one place. Set the ten place.	Section 3.2.3
Occupied station count switch (SW1) 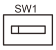 Set the number of occupied stations.	Section 3.2.5
Switch for manufacturer setting (SW2) 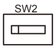 Do not change the default setting (left).	
Communication alarm display section Indicates alarms in CC-Link communication. ■ L.RUN ■ SD ■ RD ■ L.ERR	Section 11.3
USB communication connector (CN5) Used to connect the personal computer.	Chapter 7
RS-422 communication connector (CN3) Used to connect the MR-PRU03 parameter unit or personal computer.	Chapter 7 Chapter 8 Chapter 15
CC-Link connector (CN1) Wire the CC-Link cable.	Section 3.2.2
I/O signal connector (CN6) Used to connect digital I/O signals.	Section 4.2 Section 4.4
Battery holder Contains the battery for absolute position data backup.	Section 5.8
Encoder connector (CN2) Used to connect the servo motor encoder.	Section 4.10 Section 14.1
Battery connector (CN4) Used to connect the battery for absolute position data backup.	Section 5.8 Section 14.7
Power factor improving DC reactor terminal block (TE3) Used to connect the power factor improving DC reactor.	Section 4.1 Section 4.3 Section 12.1 Section 14.11
Charge lamp Lit to indicate that the main circuit is charged. While this lamp is lit, do not reconnect the cables.	
Main circuit terminal block (TE1) Used to connect the input power supply and servo motor.	Section 4.1 Section 4.3 Section 12.1
Control circuit terminal block (TE2) Used to connect the control circuit power supply.	
Protective earth (PE) terminal (⏚) Grounding terminal.	
Rating plate	Section 1.4

(5) MR-J3-700T(4)

POINT

- The servo amplifier is shown without the front cover. For removal of the front cover, refer to section 1.6.2.

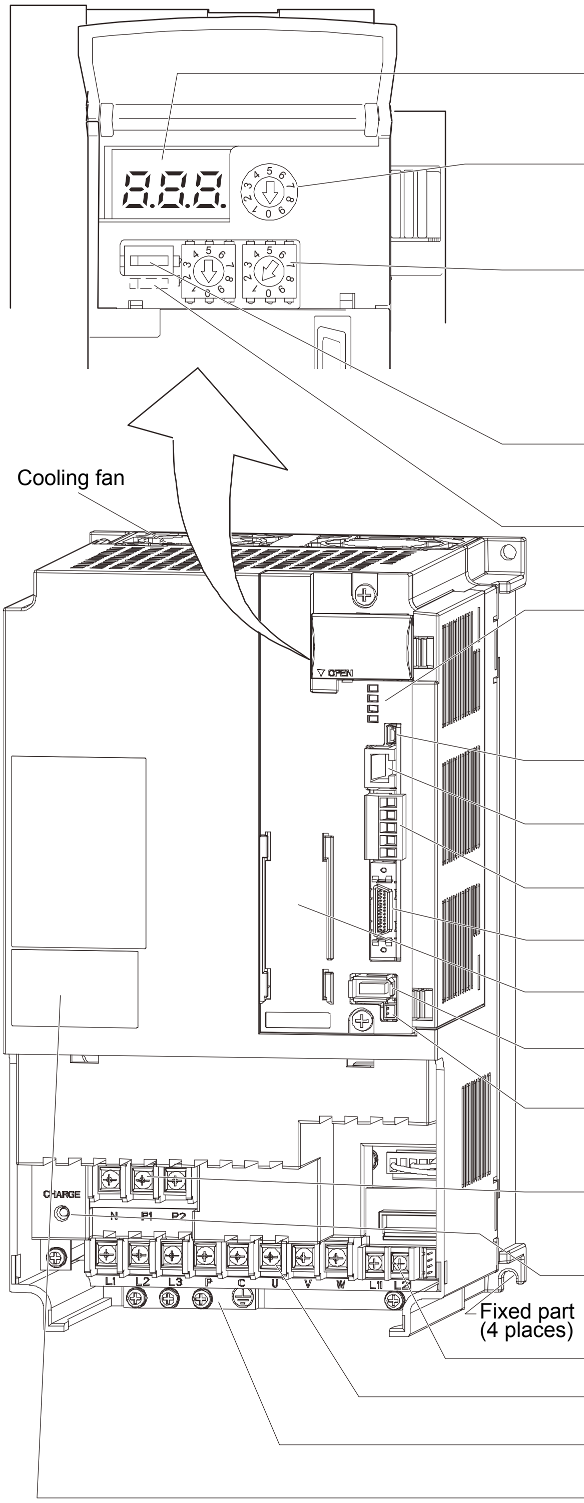

Name/Application	Detailed explanation
Display The 3-digit, seven-segment LED shows the servo status and alarm number.	Section 5.3 Chapter 11
Baud rate switch (MODE) 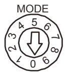 Select the CC-Link communication baud rate.	Section 3.2.4
Station number switches (STATION NO.) Set the station number of the servo amplifier. 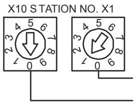 Set the one place. Set the ten place.	Section 3.2.3
Occupied station count switch (SW1) 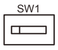 Set the number of occupied stations.	Section 3.2.5
Switch for manufacturer setting (SW2) 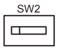 Do not change the default setting (left).	
Communication alarm display section Indicates alarms in CC-Link communication. ■ L.RUN ■ SD ■ RD ■ L.ERR	Section 11.3
USB communication connector (CN5) Used to connect the personal computer.	Chapter 7
RS-422 communication connector (CN3) Used to connect the MR-PRU03 parameter unit or personal computer.	Chapter 7 Chapter 8 Chapter 15
CC-Link connector (CN1) Wire the CC-Link cable.	Section 3.2.2
I/O signal connector (CN6) Used to connect digital I/O signals.	Section 4.2 Section 4.4
Battery holder Contains the battery for absolute position data backup.	Section 5.8
Encoder connector (CN2) Used to connect the servo motor encoder.	Section 4.10 Section 14.1
Battery connector (CN4) Used to connect the battery for absolute position data backup.	Section 5.8 Section 14.7
Power factor improving DC reactor terminal block (TE3) Used to connect the power factor improving DC reactor.	Section 4.1 Section 4.3 Section 12.1 Section 14.11
Charge lamp Lit to indicate that the main circuit is charged. While this lamp is lit, do not reconnect the cables.	
Control circuit terminal block (TE2) Used to connect the control circuit power supply.	Section 4.1 Section 4.3 Section 12.1
Main circuit terminal block (TE1) Used to connect the input power supply and servo motor.	
Protective earth (PE) terminal (⏚) Grounding terminal.	
Rating plate	Section 1.4

(6) MR-J3-11KT(4) to MR-J3-22KT(4)

> **POINT**
>
> - The servo amplifier is shown without the front cover. For removal of the front cover, refer to section 1.6.2.

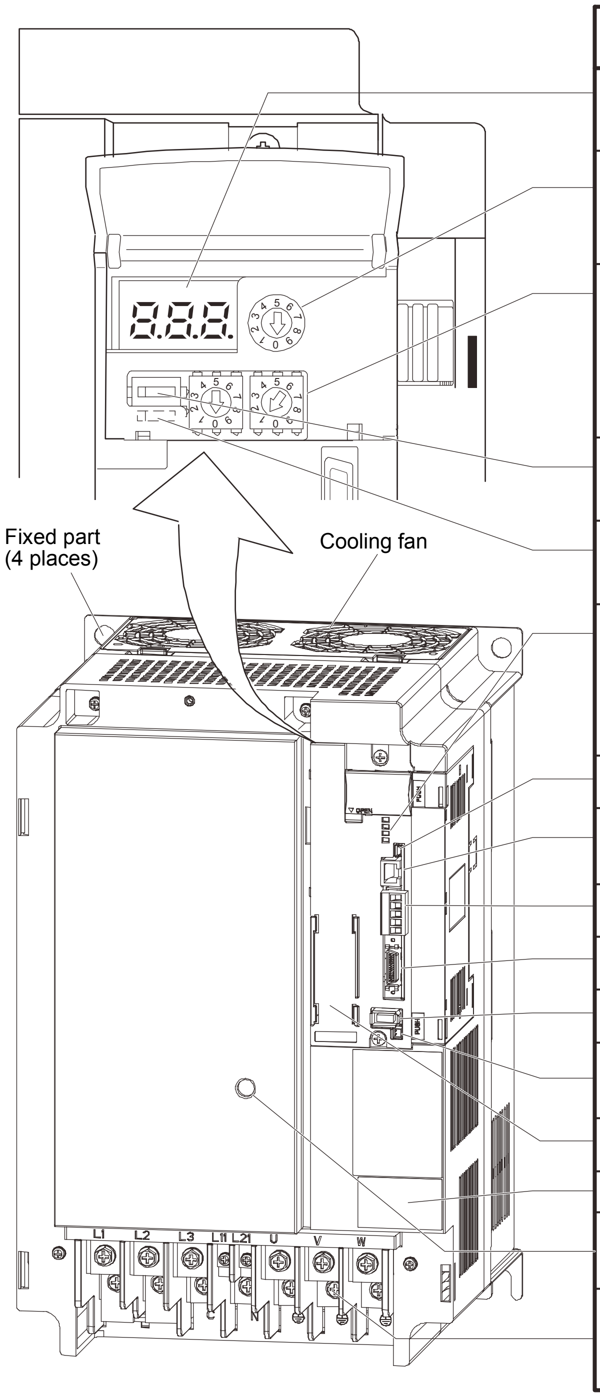

Name/Application	Detailed explanation
Display The 3-digit, seven-segment LED shows the servo status and alarm number.	Section 5.3 Chapter 11
Baud rate switch (MODE) MODE Select the CC-Link communication baud rate.	Section 3.2.4
Station number switches (STATION NO.) Set the station number of the servo amplifier. X10 STATION NO. X1 Set the one place. Set the ten place.	Section 3.2.3
Occupied station count switch (SW1) SW1 Set the number of occupied stations.	Section 3.2.5
Switch for manufacturer setting (SW2) SW2 Do not change the default setting (left).	
Communication alarm display section Indicates alarms in CC-Link communication. ■ L.RUN ■ SD ■ RD ■ L.ERR	Section 11.3
USB communication connector (CN5) Used to connect the personal computer.	Chapter 7
RS-422 communication connector (CN3) Used to connect the MR-PRU03 parameter unit or personal computer.	Chapter 7 Chapter 8 Chapter 15
CC-Link connector (CN1) Wire the CC-Link cable.	Section 3.2.2
I/O signal connector (CN6) Used to connect digital I/O signals.	Section 4.2 Section 4.4
Encoder connector (CN2) Used to connect the servo motor encoder.	Section 4.10 Section 14.1
Battery connector (CN4) Used to connect the battery for absolute position data backup.	Section 5.8 Section 14.7
Battery holder Contains the battery for absolute position data backup.	Section 5.8
Rating plate	Section 1.4
Charge lamp Lit to indicate that the main circuit is charged. While this lamp is lit, do not reconnect the cables.	
Main circuit terminal block and Control circuit and Protective earth (TE) Used to connect the input power supply and servo motor and regenerative option and ground.	Section 4.1 Section 4.3 Section 12.1 Section 14.11

1.6.2 Removal and reinstallation of the front cover

⚠WARNING	· Before removing or installing the front cover, turn off the power and wait for 15 minutes or more until the charge lamp turns off. Then, confirm that the voltage between P(＋) and N(－) is safe with a voltage tester and others. Otherwise, an electric shock may occur. In addition, always confirm from the front of the servo amplifier whether the charge lamp is off or not.

(1) For MR-J3-350T4 · MR-J3-500T(4) · MR-J3-700T(4)

Removal of the front cover

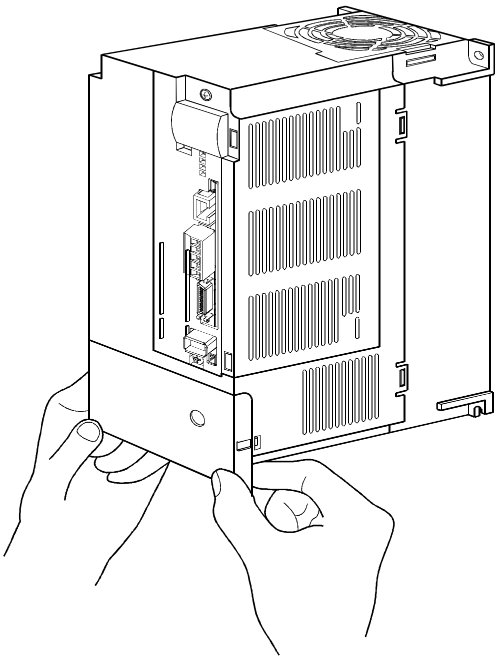

Hold the ends of lower side of the front cover with both hands.

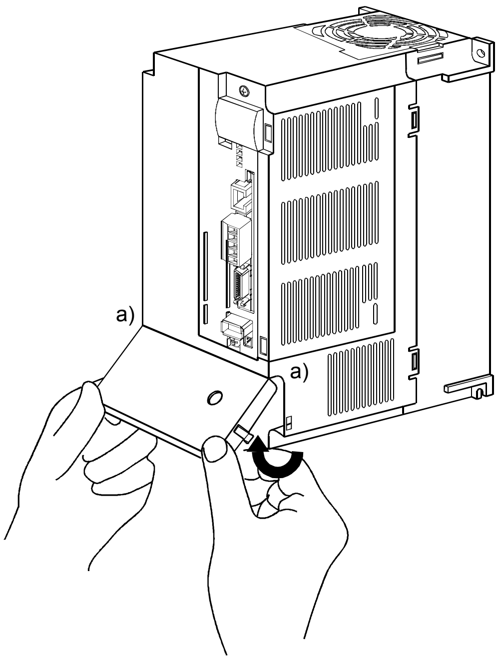

Pull up the cover, supporting at point a).

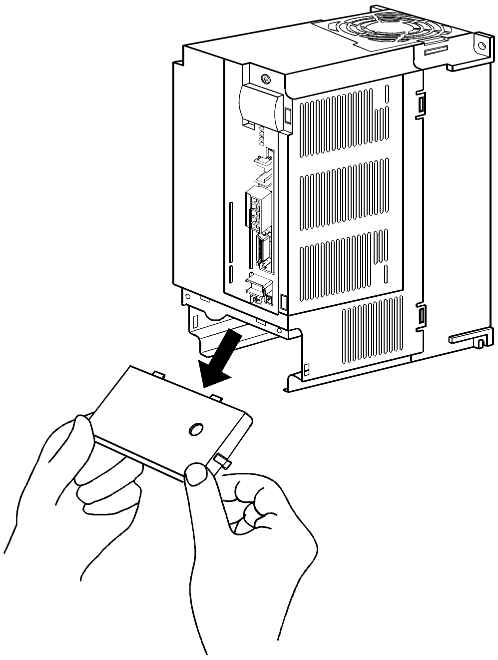

Pull out the front cover to remove.

Reinstallation of the front cover

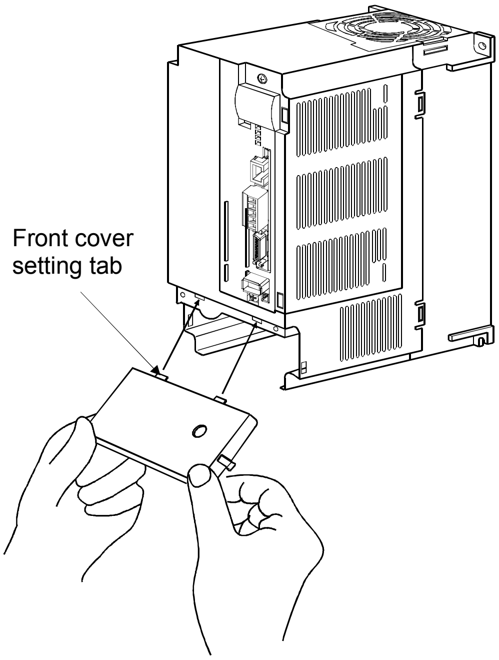

Insert the front cover setting tabs into the sockets of servo amplifier (2 places).

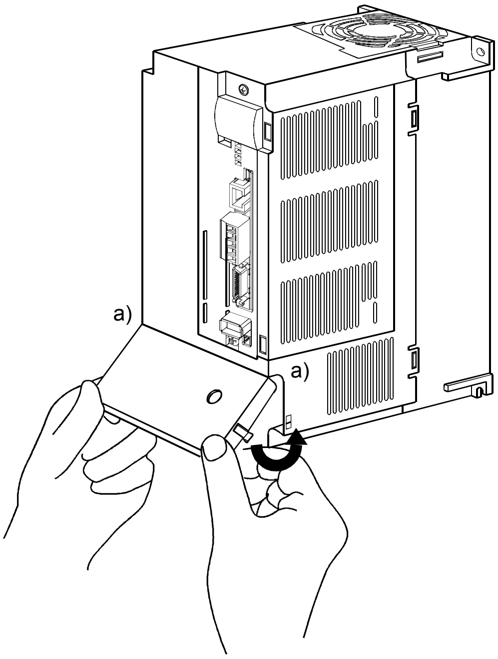

Pull up the front cover, supporting at point a).

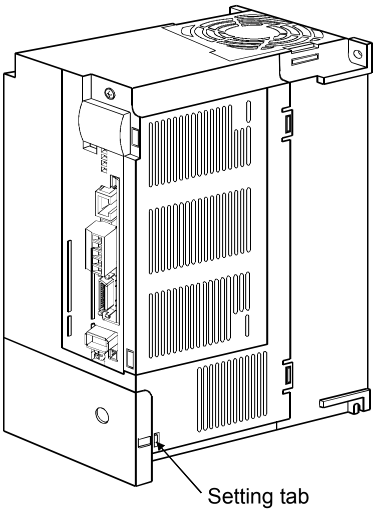

Push the setting tabs until they click.

(2) For MR-J3-11KT(4) to MR-J3-22KT(4)

Removal of the front cover

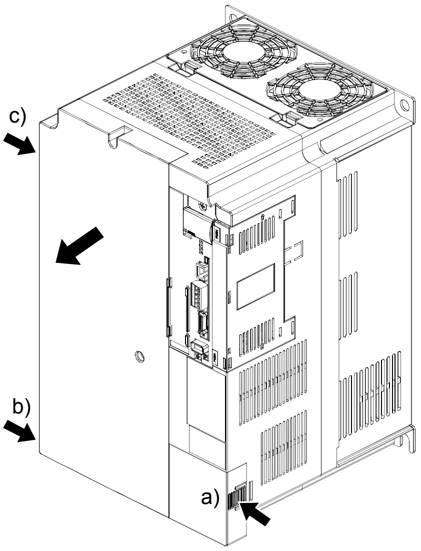

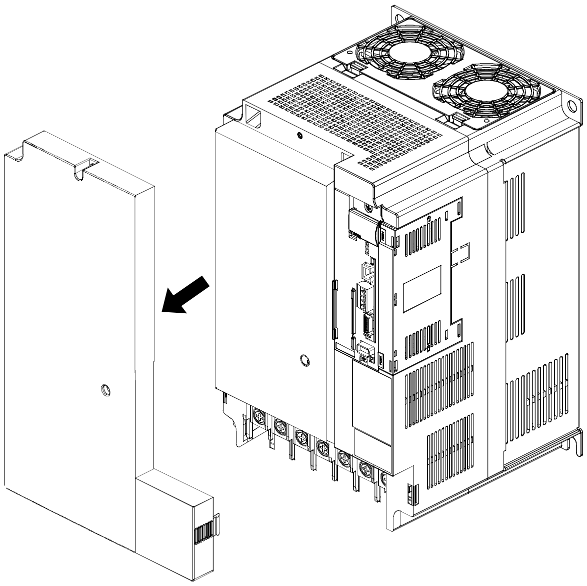

1) Press the removing knob on the lower side of the front cover (a) and b)) and release the installation hook.
2) Press the removing knob of c) and release the external hook.
3) Pull it to remove the front cover.

Reinstallation of the front cover

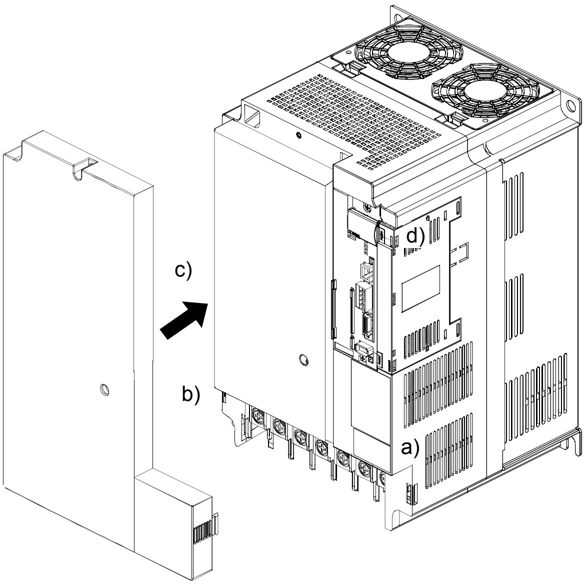

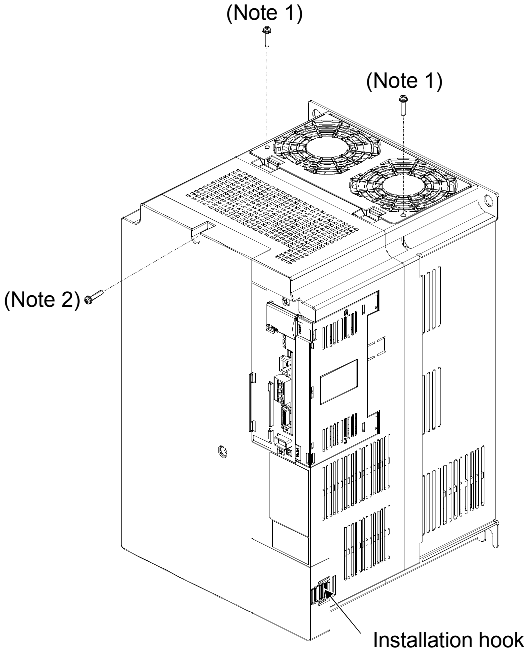

1) Fit the front cover installation hooks on the sockets of body cover (a) to d)) to reinstall it.
2) Push the front cover until you hear the clicking noise of the installation hook.

Note 1. The cooling fan cover can be locked with enclosed screws (M4 × 40).
2. By drilling approximately ϕ4 of a hole on the front cover, the front cover can be locked on the body with an enclosed screw (M4 × 14).

1.7 Configuration including auxiliary equipment

> **POINT**
>
> - Equipment other than the servo amplifier and servo motor are optional or recommended products.

(1) MR-J3-100T or less

(a) For 3-phase or 1-phase 200V to 230VAC

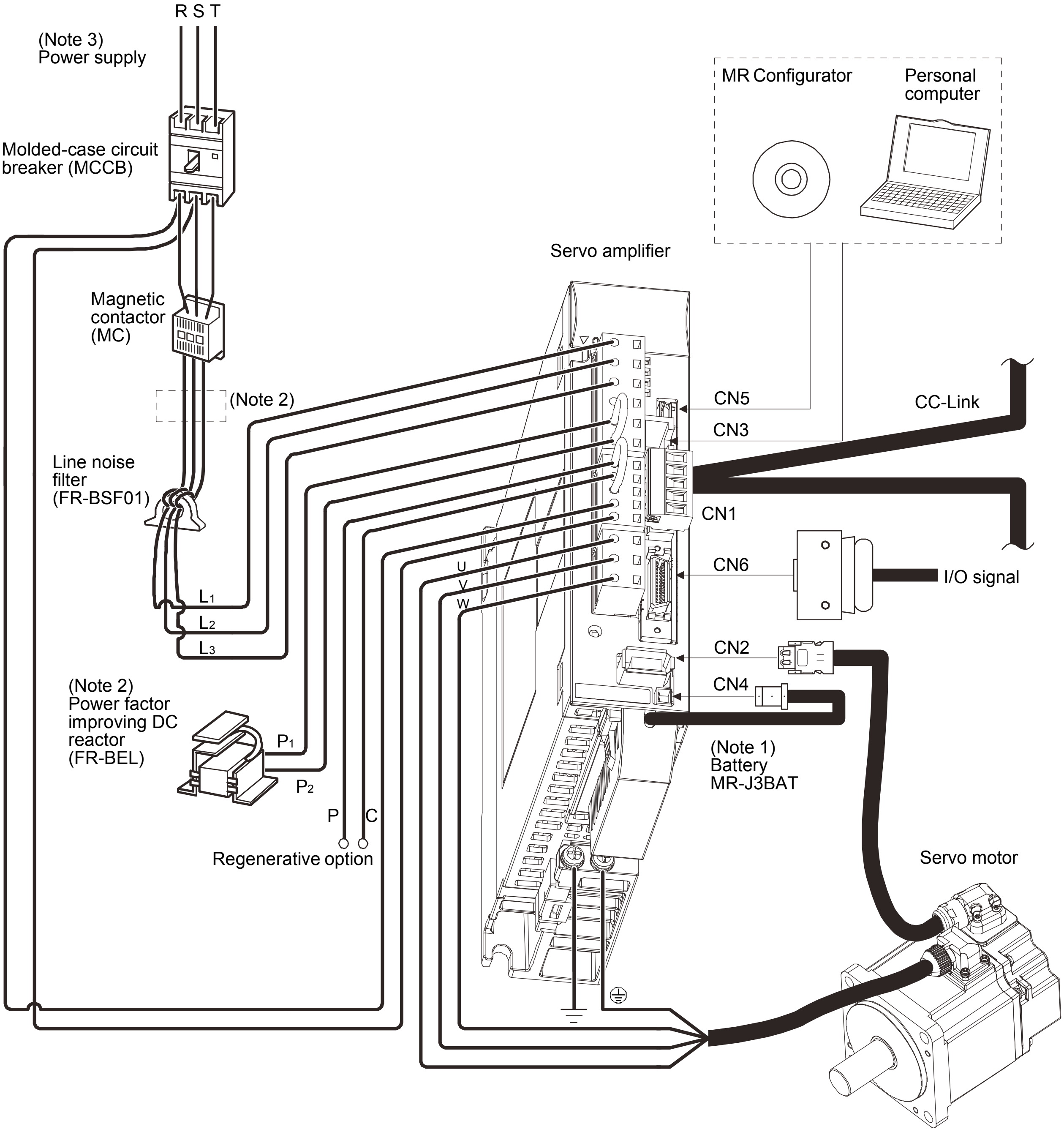

Note 1. The battery (option) is used for the absolute position detection system in the position control mode.

2. The power factor improving AC reactor can also be used. In this case, the power factor improving DC reactor cannot be used. When not using power factor improving DC reactor, short P_1 and P_2.

3. 1-phase 200V to 230VAC power supply may be used with the servo amplifier of MR-J3-70T or less. For 1-phase 200V to 230VAC, connect the power supply to L_1 ・ L_2 and leave L_3 open. Refer to section 1.2 for the power supply specification.

(b) For 1-phase 100V to 120VAC

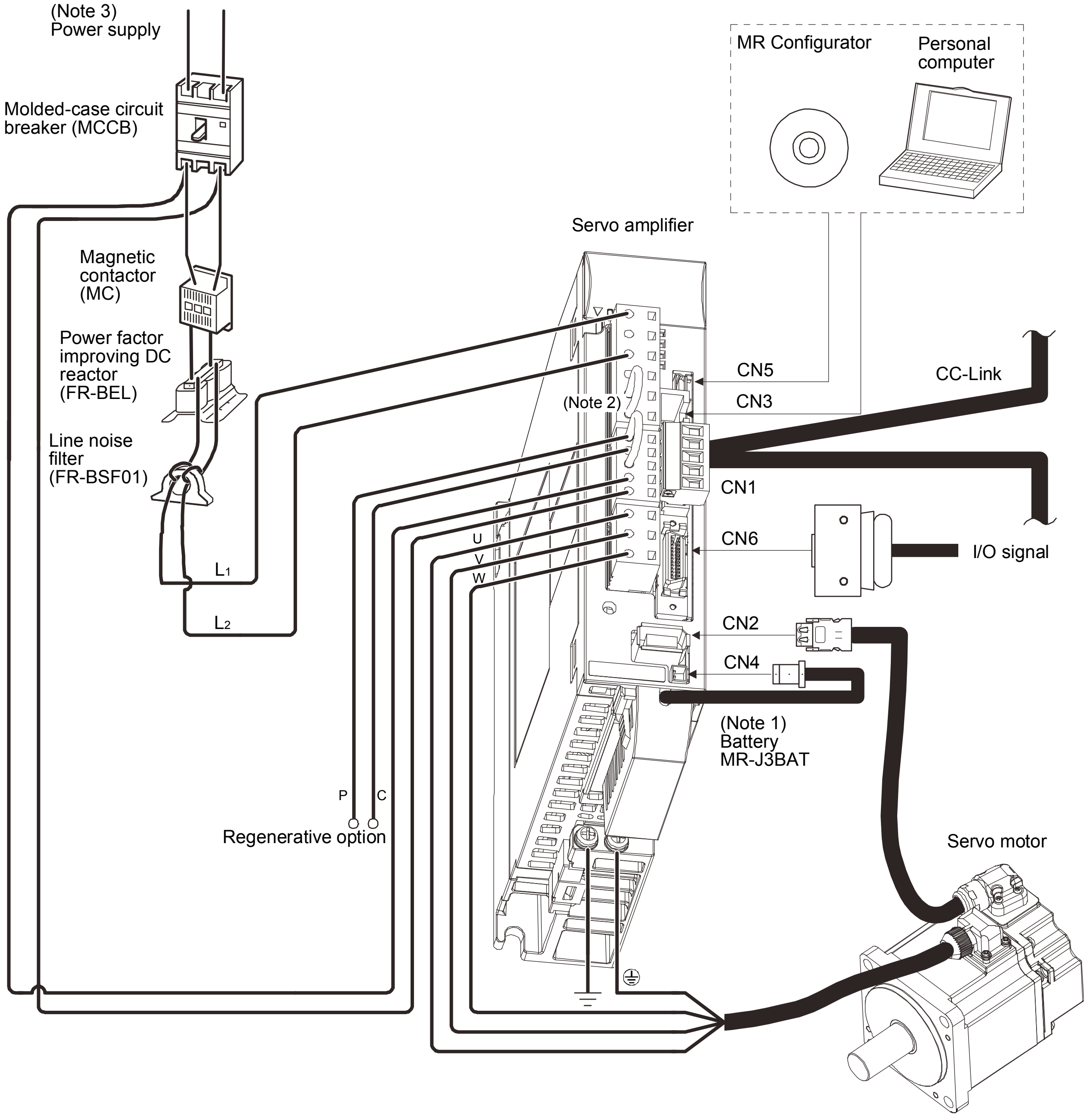

Note 1. The battery (option) is used for the absolute position detection system in the position control mode.

2. The power factor improving DC reactor cannot be used.

3. Refer to section 1.2 for the power supply specification.

(2) MR-J3-60T4・MR-J3-100T4

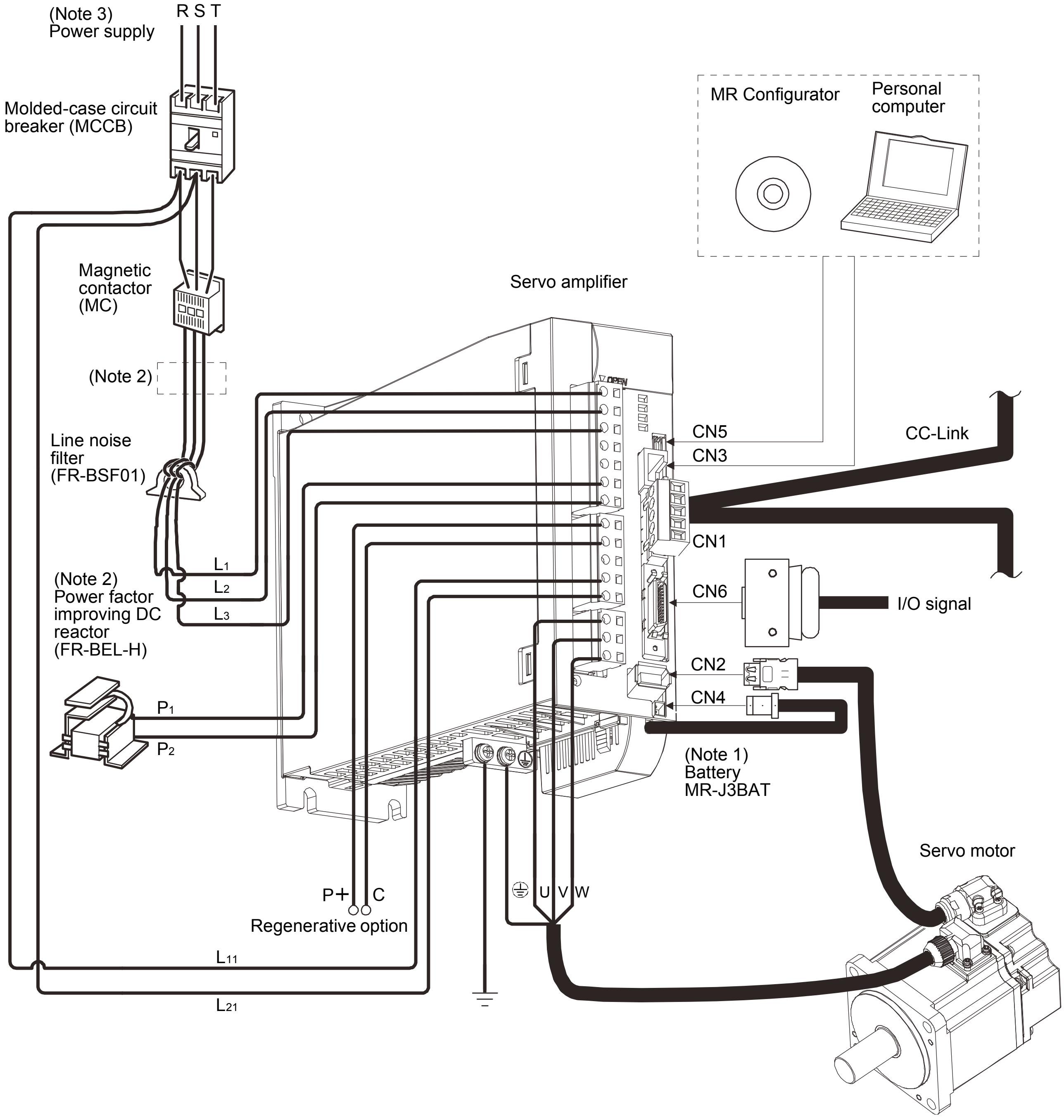

Note 1. The battery (option) is used for the absolute position detection system in the position control mode.
2. The power factor improving AC reactor can also be used. In this case, the power factor improving DC reactor cannot be used. When not using power factor improving DC reactor, short P_1 and P_2.
3. Refer to section 1.2 for the power supply specification.

(3) MR-J3-200TN・MR-J3-200T4

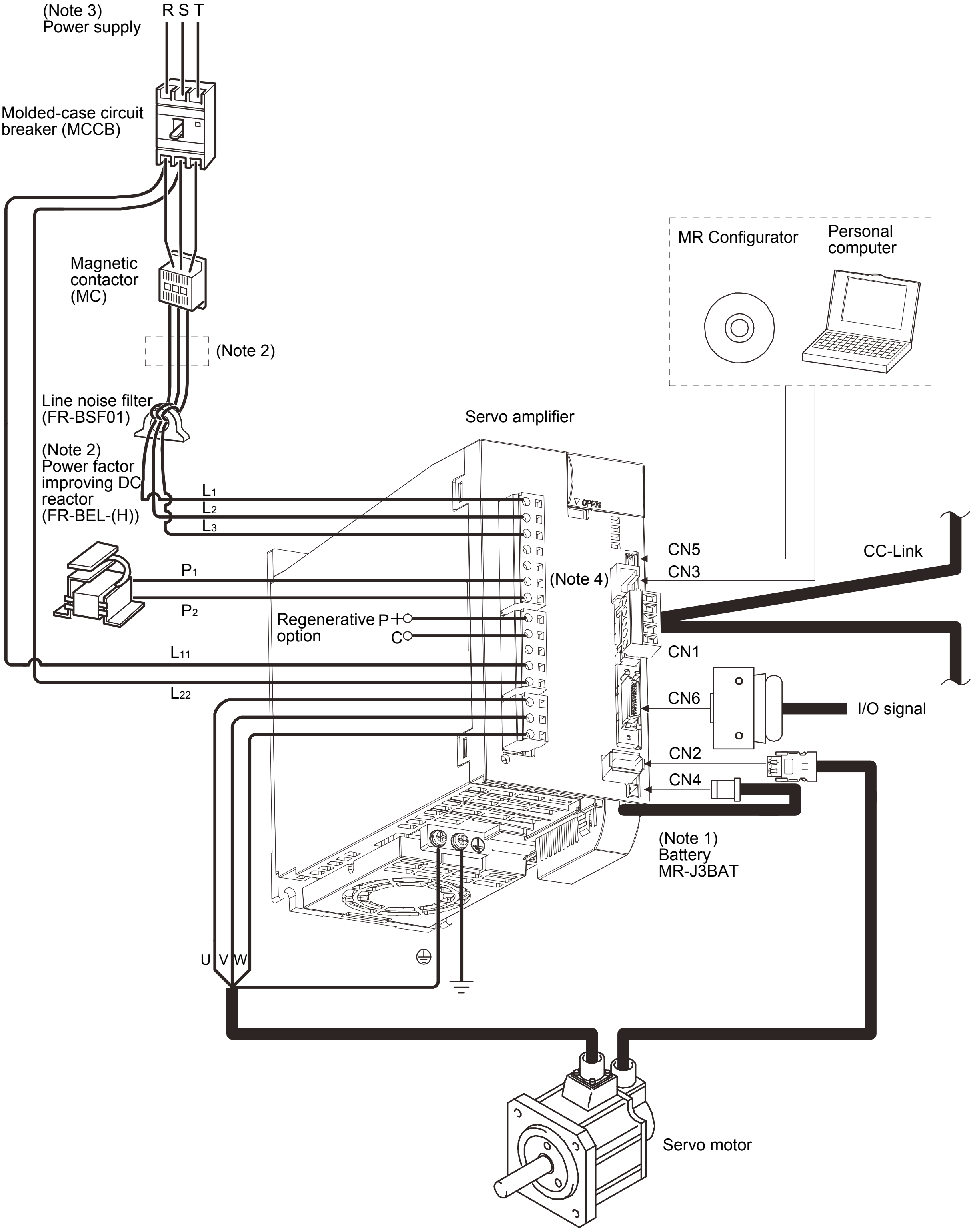

Note 1. The battery (option) is used for the absolute position detection system in the position control mode.

2. The power factor improving AC reactor can also be used. In this case, the power factor improving DC reactor cannot be used. When not using power factor improving DC reactor, short P_1 and P_2.

3. Refer to section 1.2 for the power supply specification.

4. Connectors (CNP1, CNP2, and CNP3) and appearance of MR-J3-200T servo amplifier have been changed from January 2008 production. Model name of the existing servo amplifier is changed to MR-J3-200T-RT. For MR-J3-200T-RT, refer to appendix 5.

(4) MR-J3-350T

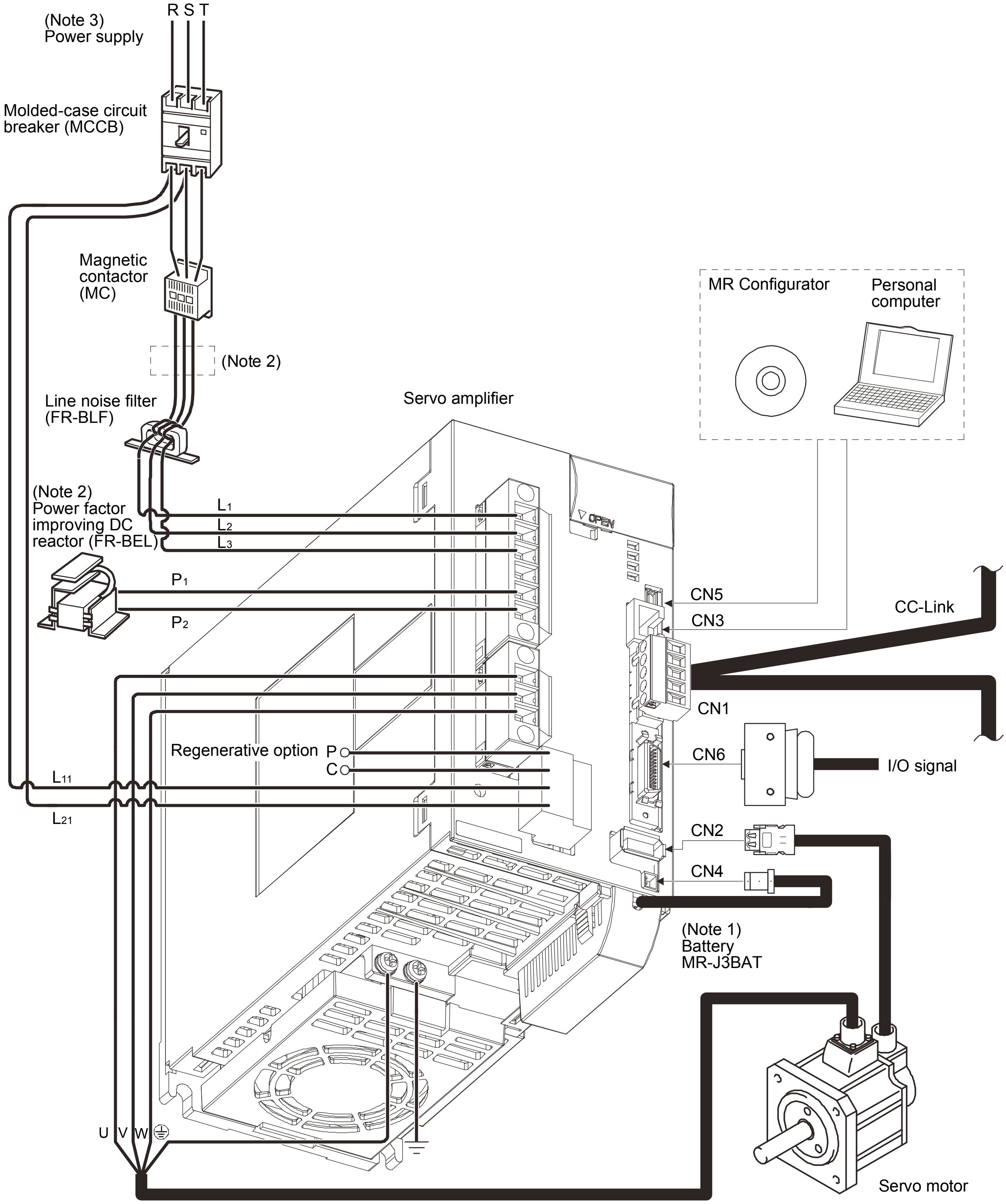

Note 1. The battery (option) is used for the absolute position detection system in the position control mode.

2. The power factor improving AC reactor can also be used. In this case, the power factor improving DC reactor cannot be used. When not using power factor improving DC reactor, short P_1 and P_2.

3. Refer to section 1.2 for the power supply specification.

(5) MR-J3-350T4 · MR-J3-500T(4)

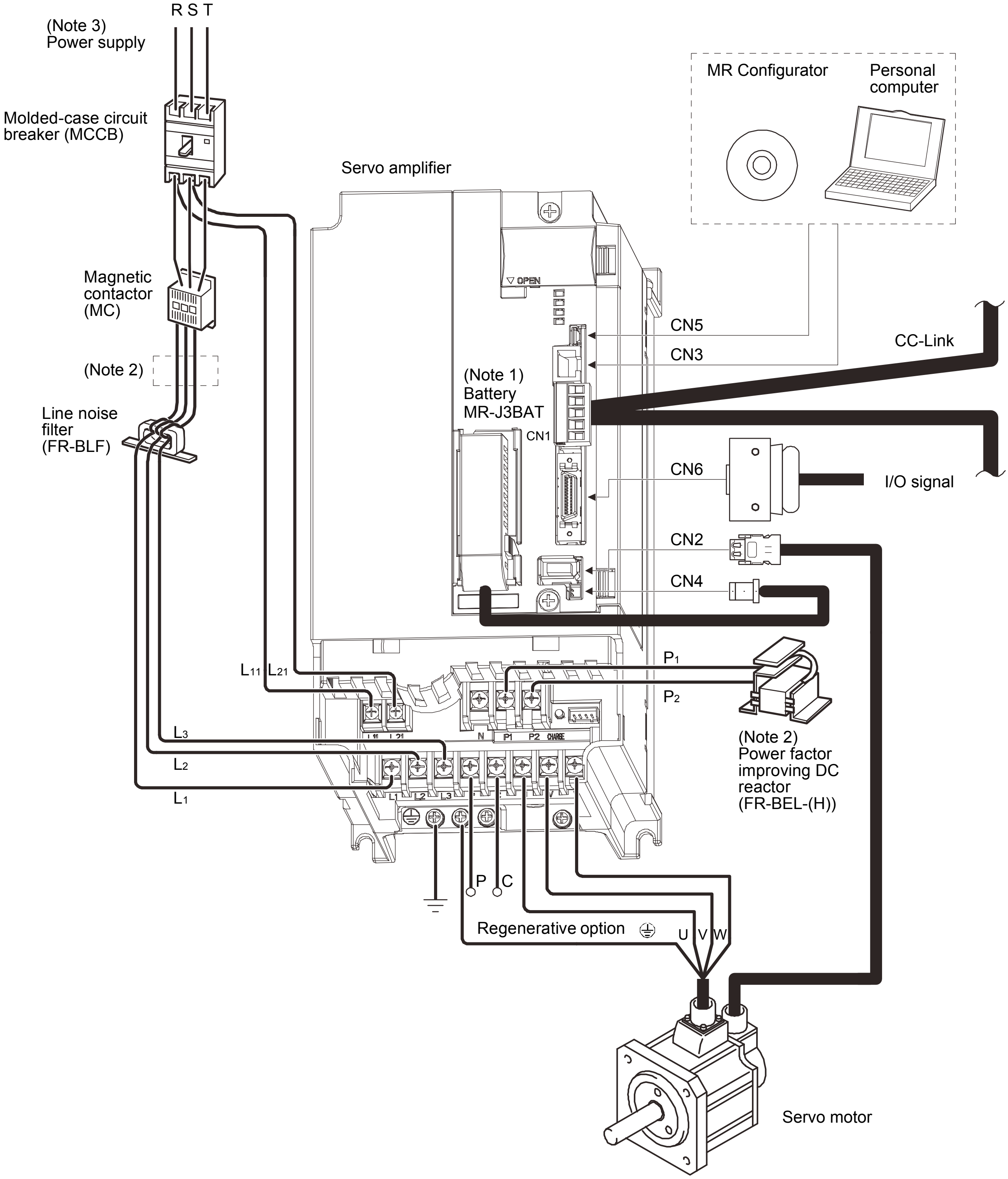

Note 1. The battery (option) is used for the absolute position detection system in the position control mode.

2. The power factor improving AC reactor can also be used. In this case, the power factor improving DC reactor cannot be used. When not using power factor improving DC reactor, short P_1 and P_2.

3. Refer to section 1.2 for the power supply specification.

(6) MR-J3-700T(4)

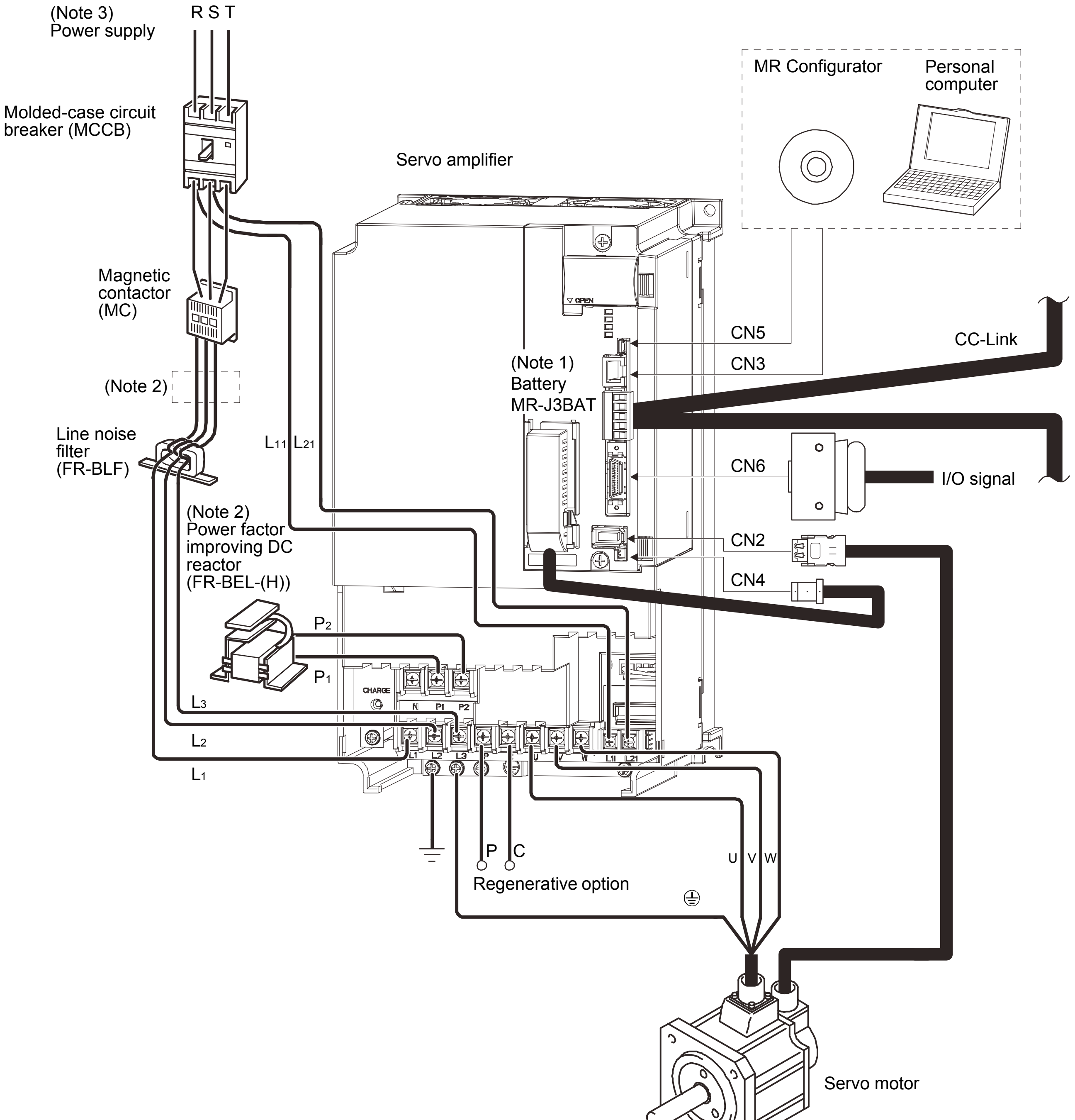

Note 1. The battery (option) is used for the absolute position detection system in the position control mode.

2. The power factor improving AC reactor can also be used. In this case, the power factor improving DC reactor cannot be used. When not using power factor improving DC reactor, short P_1 and P_2.

3. Refer to section 1.2 for the power supply specification.

(7) MR-J3-11KT(4) to MR-J3-22KT(4)

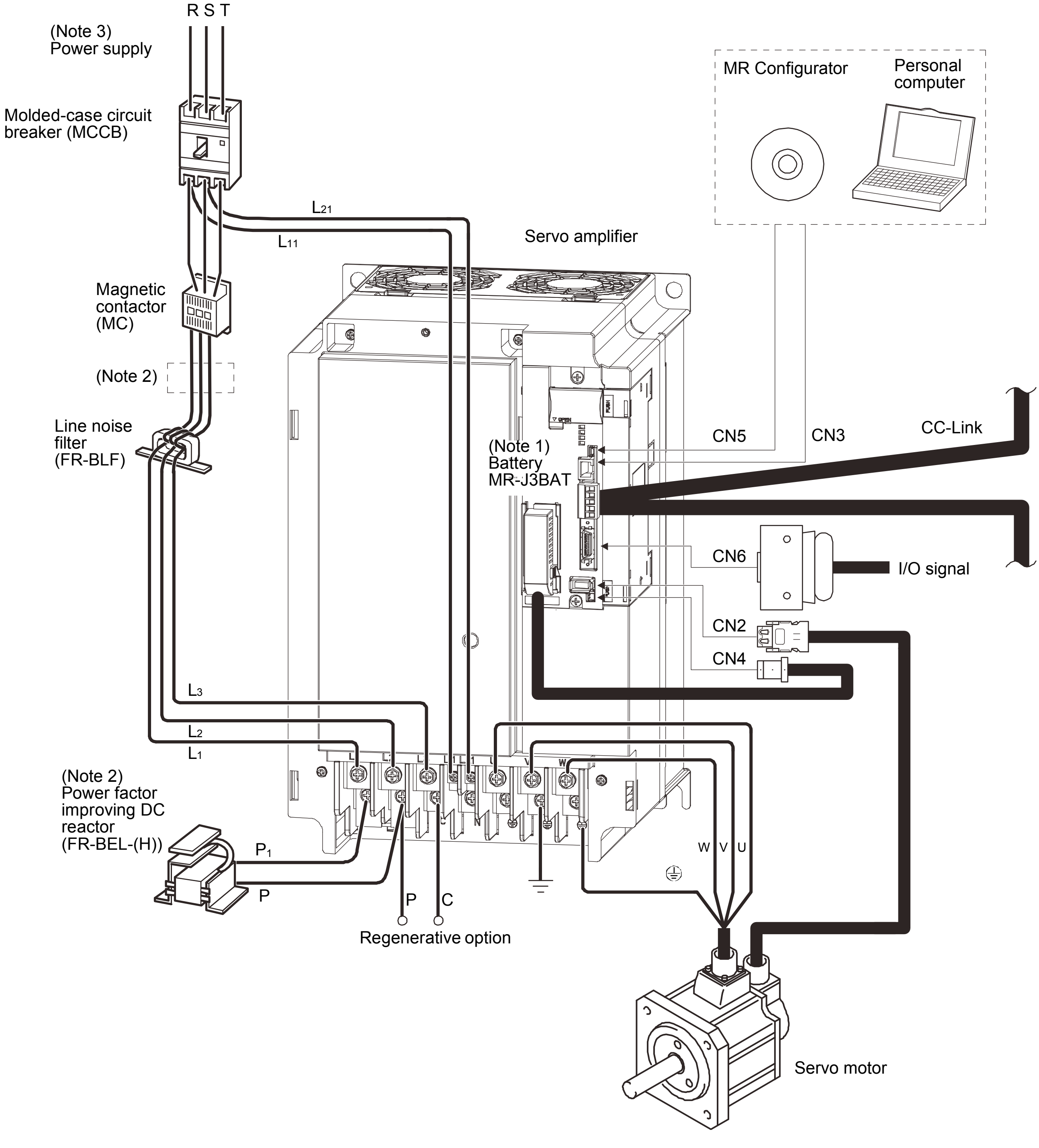

Note 1. The battery (option) is used for the absolute position detection system in the position control mode.

2. The power factor improving AC reactor can also be used. In this case, the power factor improving DC reactor cannot be used. When not using power factor improving DC reactor, short P_1 and P_2.

3. Refer to section 1.2 for the power supply specification.

1.8 Selection of operation method

Using the CC-Link communication functions, this servo enables a wide variety of operation methods. The operation method changes depending on the input device, parameter and point table setting.
The flow of the operation method that changes depending on the device and parameter setting status is shown in the chart for your reference.

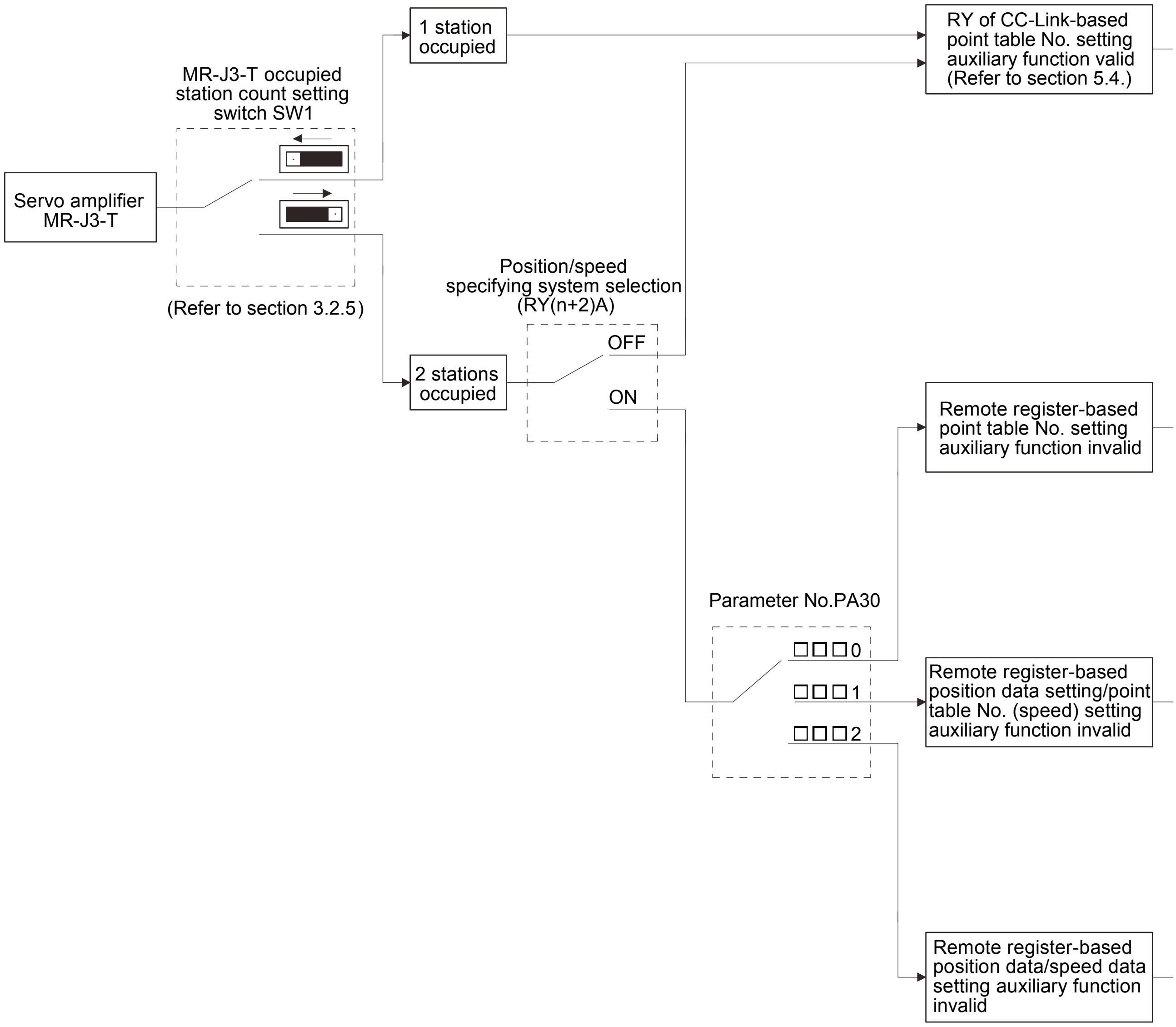

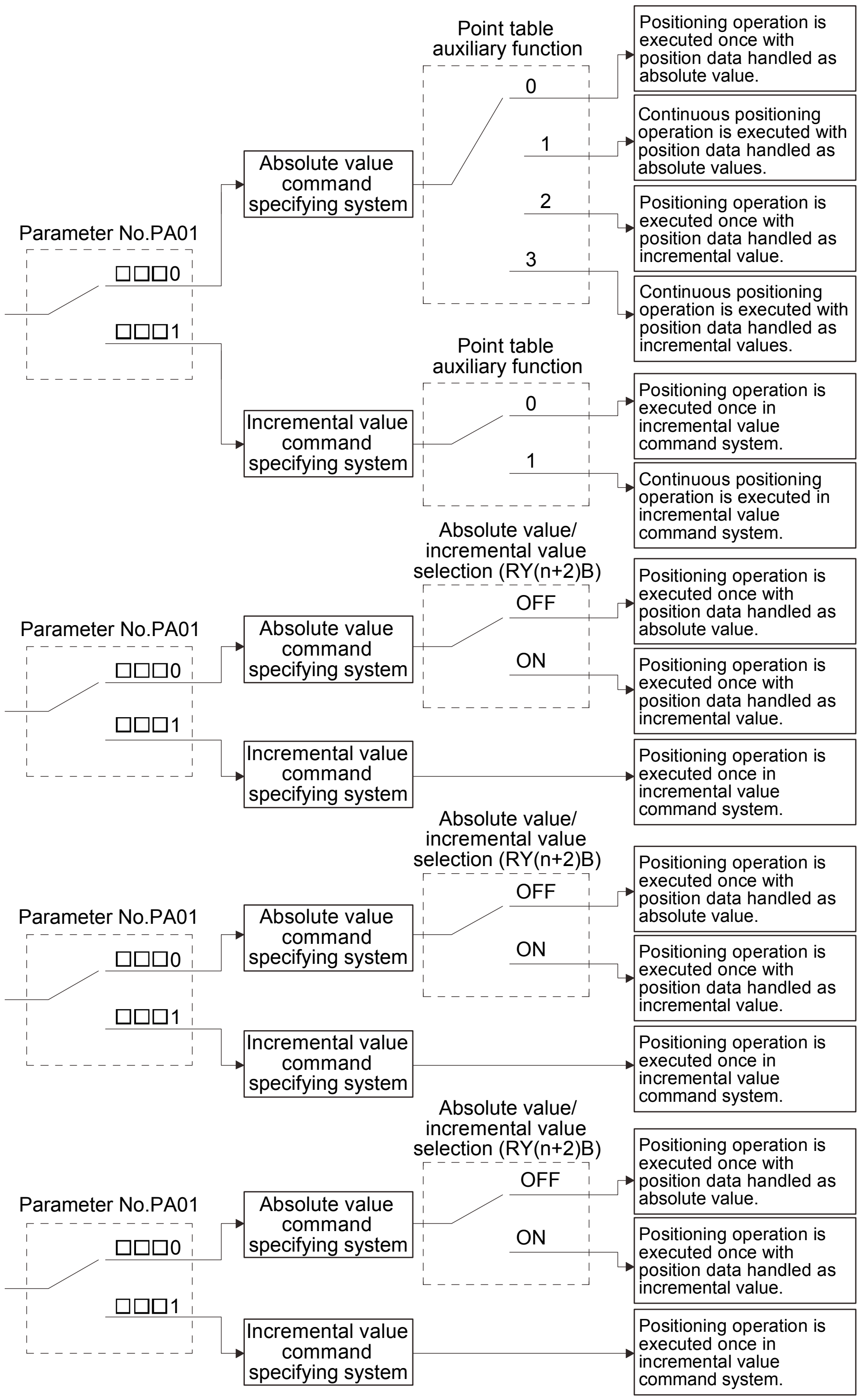

Reference	Main description
Section 3.8.2 Section 5.4.2 (1)	Positioning is started by making the start signal valid after selection of the point table with the CC-Link RY. Using the auxiliary function, automatic continuous operation can be performed with multiple point tables.
Section 3.8.2 Section 5.4.2 (4) (b) 1)	
Section 3.8.2 Section 5.4.2 (2)	
Section 3.8.2 Section 5.4.2 (4) (b) 1)	
Section 3.8.2 Section 5.4.2 (1)	
Section 3.8.2 Section 5.2.2 (4) (b) 2)	
Section 3.6.3 (1) Section 3.7.6 (3)	Positioning is started by making the start signal valid after selection of the point table with the remote register. The auxiliary function cannot be used.
Section 3.6.3 (2)	Set the position data directly with the remote register, and use the settings of the point table selected with the remote register as the servo motor speed and acceleration/deceleration time constants. Positioning is started by making the start signal valid. The auxiliary function cannot be used.
Section 3.6.3 (3) Section 3.8.4 Section 5.4.3 (1)	Set the position data and servo motor speed directly with the remote register. Use the settings of the point table No.1 as the acceleration/deceleration time constants. Positioning is started by making the start signal valid. The auxiliary function cannot be used.
Section 3.6.3 (3) Section 5.4.3 (2)	
Section 3.6.3 (3) Section 3.7.6 (2) Section 5.4.3 (3)	

MEMO

2. INSTALLATION

⚠ CAUTION	Stacking in excess of the limited number of products is not allowed. • Install the equipment on incombustible material. Installing them directly or close to combustibles will lead to a fire. • Install the servo amplifier and the servo motor in a load-bearing place in accordance with the Instruction Manual. • Do not get on or put heavy load on the equipment to prevent injury. • Use the equipment within the specified environmental condition range. (For the environmental conditions, refer to section 1.2.) • Provide an adequate protection to prevent screws, metallic detritus and other conductive matter or oil and other combustible matter from entering the servo amplifier. • Do not block the intake/exhaust ports of the servo amplifier and the servo motor with a cooling fan. Otherwise, a fault may occur. • Do not subject the servo amplifier to drop impact or shock loads as they are precision equipment. • Do not install or operate a faulty servo amplifier. • When the product has been stored for an extended period of time, consult Mitsubishi. • When handling the servo amplifier, be careful about the edged parts such as the corners of the servo amplifier. • The servo amplifier must be installed in a metal cabinet. • When fumigants that contain halogen materials, such as fluorine, chlorine, bromine, and iodine, are used for disinfecting and protecting wooden packaging from insects, they cause malfunction when entering our products. Please take necessary precautions to ensure that remaining materials from fumigant do not enter our products, or treat packaging with methods other than fumigation, (such as heat treatment.) Additionally, disinfect and protect wood from insects before packing the products.

2.1 Installation direction and clearances

⚠ CAUTION	• The equipment must be installed in the specified direction. Otherwise, a fault may occur. • Leave specified clearances between the servo amplifier and control box inside walls or other equipment.

(1) 7kW or less

(a) Installation of one servo amplifier

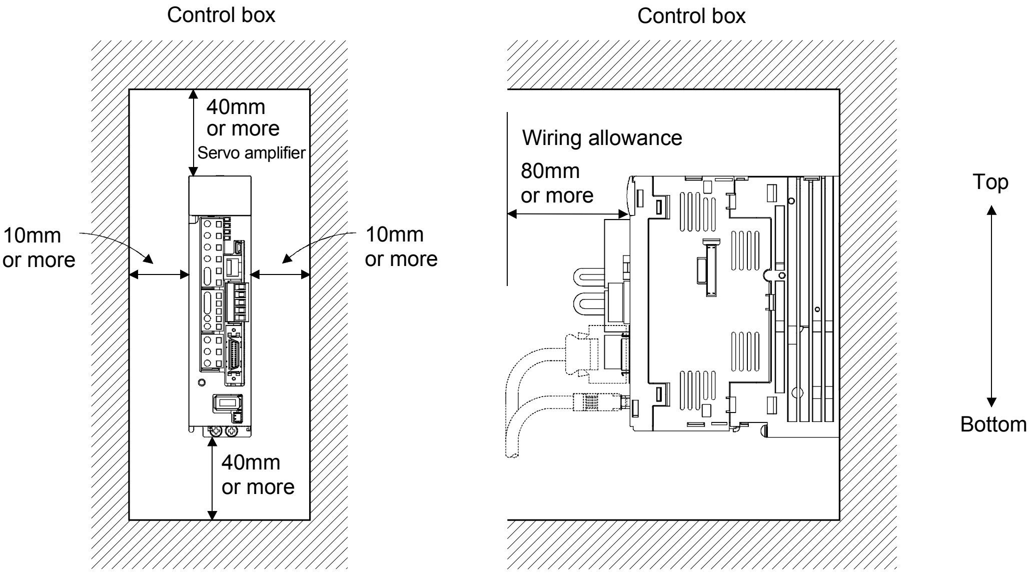

(b) Installation of two or more servo amplifiers

POINT
・Close mounting is available for the servo amplifier of under 3.5kW for 200V class and 400W for 100V class.

Leave a large clearance between the top of the servo amplifier and the internal surface of the control box, and install a cooling fan to prevent the internal temperature of the control box from exceeding the environmental conditions.

When installing the servo amplifiers closely, leave a clearance of 1mm between the adjacent servo amplifiers in consideration of mounting tolerances.

In this case, bring the ambient temperature within 0 to 45°C (32 to 113°F), or use it at 75% or a smaller effective load ratio.

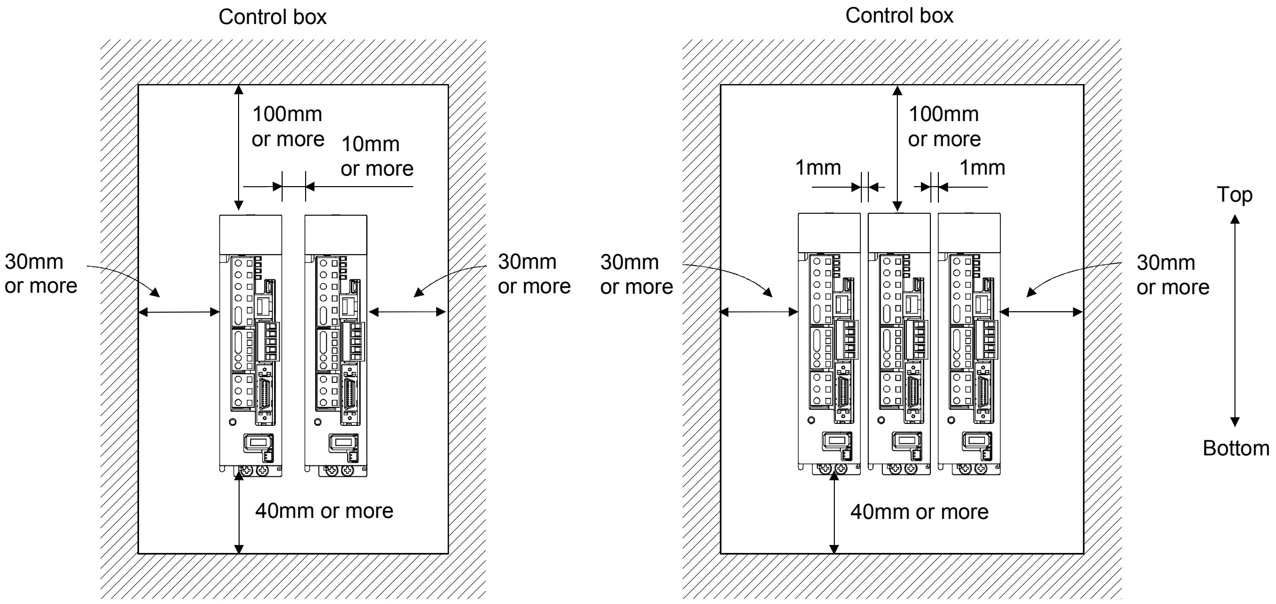

Leaving clearance   Mounting closely

(2) 11k to 22kW

(a) Installation of one servo amplifier

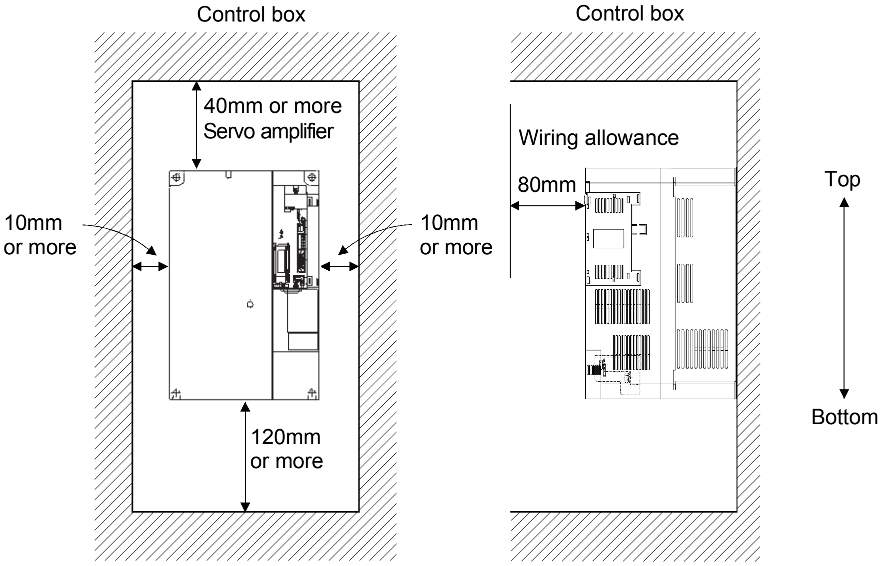

(b) Installation of two or more servo amplifiers

Leave a large clearance between the top of the servo amplifier and the internal surface of the control box, and install a cooling fan to prevent the internal temperature of the control box from exceeding the environmental conditions.

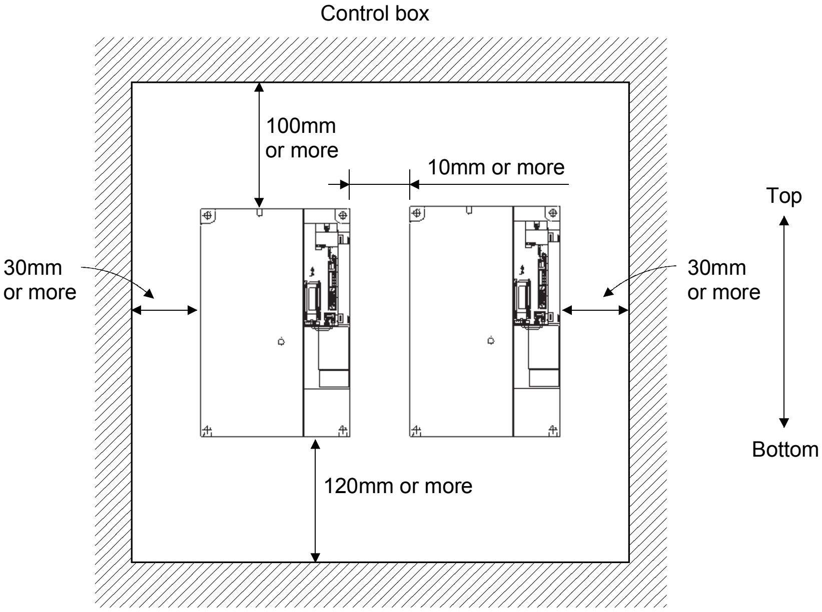

(3) Others

When using heat generating equipment such as the regenerative option, install them with full consideration of heat generation so that the servo amplifier is not affected.
Install the servo amplifier on a perpendicular wall in the correct vertical direction.

2.2 Keep out foreign materials

(1) When installing the unit in a control box, prevent drill chips and wire fragments from entering the servo amplifier.

(2) Prevent oil, water, metallic dust, etc. from entering the servo amplifier through openings in the control box or a cooling fan installed on the ceiling.

(3) When installing the control box in a place where there are much toxic gas, dirt and dust, conduct an air purge (force clean air into the control box from outside to make the internal pressure higher than the external pressure) to prevent such materials from entering the control box.

2.3 Cable stress

(1) The way of clamping the cable must be fully examined so that flexing stress and cable's own weight stress are not applied to the cable connection.

(2) For use in any application where the servo motor moves, fix the cables (encoder, power supply, brake) with having some slack from the connector connection part of the servo motor to avoid putting stress on the connector connection part. Use the optional encoder cable within the flexing life range. Use the power supply and brake wiring cables within the flexing life of the cables.

(3) Avoid any probability that the cable sheath might be cut by sharp chips, rubbed by a machine corner or stamped by workers or vehicles.

(4) For installation on a machine where the servo motor will move, the flexing radius should be made as large as possible. Refer to section 10.4 for the flexing life.

2.4 Inspection items

⚠WARNING	・Before starting maintenance and/or inspection, turn off the power and wait for 15 minutes or more until the charge lamp turns off. Then, confirm that the voltage between P(+) and N(−) is safe with a voltage tester and others. Otherwise, an electric shock may occur. In addition, always confirm from the front of the servo amplifier whether the charge lamp is off or not. ・To avoid an electric shock, only qualified personnel should attempt inspections. For repair and parts replacement, contact your local sales office.

⚠ CAUTION	・ Do not perform an insulation resistance test (megger test) on the servo amplifier. Doing so may cause a malfunction. ・ Do not disassemble and/or repair the equipment on customer side.

It is recommended that the following points periodically be checked.

(1) Check for loose terminal block screws. Retighten any loose screws.

(2) Check the cables and wires for scratches and cracks. Perform periodic inspection according to operating conditions.

(3) Check that the connector is securely connected to the servo amplifier.

(4) Check that the wires are not coming out from the connector.

(5) Check for dust accumulation on the servo amplifier.

(6) Check for unusual noise generated from the servo amplifier.

2.5 Parts having service lives

The following parts must be changed periodically as listed below. If any part is found faulty, it must be changed immediately even when it has not yet reached the end of its life, which depends on the operating method and environmental conditions. For parts replacement, please contact your sales representative.

Part name		Life guideline
Servo amplifier	Smoothing capacitor	10 years
	Relay	Number of power-on and number of emergency stop times : 100,000 times
	Cooling fan	10,000 to 30,000hours (2 to 3 years)
	Absolute position battery	Refer to section 5.8

(1) Smoothing capacitor

Affected by ripple currents, etc. and deteriorates in characteristic. The life of the capacitor greatly depends on ambient temperature and operating conditions. The capacitor will reach the end of its life in 10 years of continuous operation in normal air-conditioned environment.

(2) Relays

Their contacts will wear due to switching currents and contact faults occur. Relays reach the end of their life when the cumulative number of power-on and emergency stop times is 100,000, which depends on the power supply capacity.

(3) Servo amplifier cooling fan

The cooling fan bearings reach the end of their life in 10,000 to 30,000 hours. Normally, therefore, the cooling fan must be changed in a few years of continuous operation as a guideline.

It must also be changed if unusual noise or vibration is found during inspection.

MEMO

3. CC-LINK COMMUNICATION FUNCTIONS

3.1 Communication specifications

POINT

- This servo is equivalent to a remote device station.

For details of the programmable controller side specifications, refer to the CC-Link system master unit manual.

<table>
<tr><th colspan="3">Item</th><th colspan="5">Specifications</th></tr>
<tr><td colspan="3">Power supply</td><td colspan="5">5VDC supplied from servo amplifier</td></tr>
<tr><td rowspan="13">CC-Link</td><td colspan="2">Applicable CC-Link version</td><td colspan="5">Ver.1.10</td></tr>
<tr><td colspan="2">Communication speed</td><td colspan="5">10M/5M/2.5M/625k/156kbps</td></tr>
<tr><td colspan="2">Communication system</td><td colspan="5">Broadcast polling system</td></tr>
<tr><td colspan="2">Synchronization system</td><td colspan="5">Frame synchronization system</td></tr>
<tr><td colspan="2">Encoding system</td><td colspan="5">MRZI</td></tr>
<tr><td colspan="2">Transmission path format</td><td colspan="5">Bus format (conforming to EIA RS485)</td></tr>
<tr><td colspan="2">Error control system</td><td colspan="5">CRC ($X^{16}+X^{12}+X^5+1$)</td></tr>
<tr><td colspan="2">Connection cable</td><td colspan="5">CC-Link Ver.1.10-compliant cable (Shielded 3-core twisted pair cable)</td></tr>
<tr><td colspan="2">Transmission format</td><td colspan="5">Conforming to HDLC</td></tr>
<tr><td colspan="2">Remote station number</td><td colspan="5">1 to 64</td></tr>
<tr><td rowspan="3">(Note) Cable length</td><td>Communication speed</td><td>156Kbps</td><td>625Kbps</td><td>2.5Mbps</td><td>5Mbps</td><td>10Mbps</td></tr>
<tr><td>Maximum overall cable length</td><td>1200m</td><td>900m</td><td>400m</td><td>160m</td><td>100m</td></tr>
<tr><td>Inter-station cable length</td><td colspan="5">0.2m or more</td></tr>
<tr><td colspan="3">Number of servo amplifiers connected</td><td colspan="5">Max. 42 (when 1 station is occupied by 1 servo amplifier), (max. 32 when 2 stations are occupied by 1 servo amplifier), when there are only remote device stations. Can be used with other equipment.</td></tr>
</table>

Note. If the system comprises of both CC-Link Ver.1.00- and Ver.1.10-compliant cables, Ver.1.00 specifications are applied to the overall cable length and the cable length between stations. For more information, refer to the CC-Link system master/local unit user's manual.

3.2 System configuration

3.2.1 Configuration example

(1) Programmable controller side

Fit "Type QJ61BT11N", "Type A1SJ61BT11" or "Type A1SJ61QBT11" "Control & Communication Link system master/local module" to the main or extension base unit which is loaded with the programmable controller CPU used as the master station.

(2) Wiring

Connect the programmable controller CC-Link unit master station and the servo amplifier by a twisted pair cable (3-wire type).

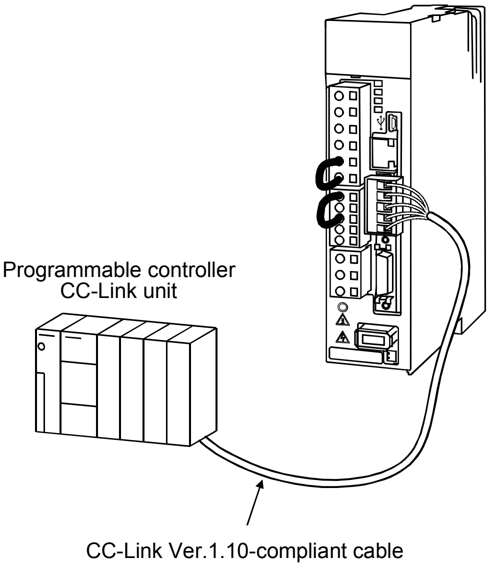

3.2.2 Wiring method

(1) Communication connector

The pin layout of the communication connector CN10 on the servo amplifier unit is shown below.

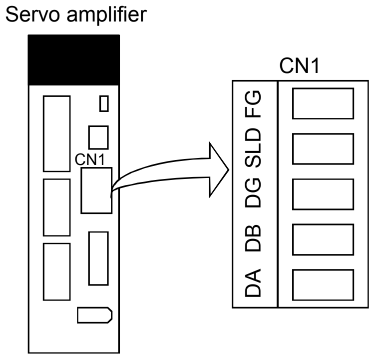

(2) Connection example

The servo amplifier and programmable controller CC-Link master unit are wired as shown below. Refer to section 14.9 (3) for the CC-Link Ver.1.10-compliant cable used for connection.

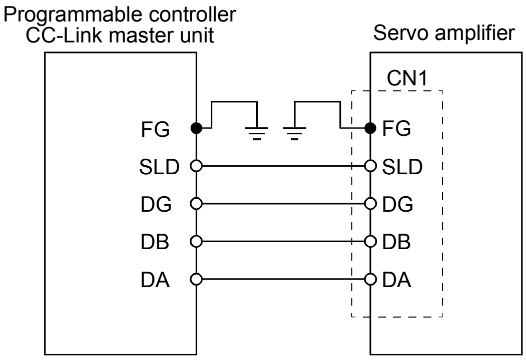

(3) Example of connecting multiple servo units

As the remote I/O stations of CC-Link, servo amplifiers share the link system and can be controlled/monitored using programmable controller user programs.

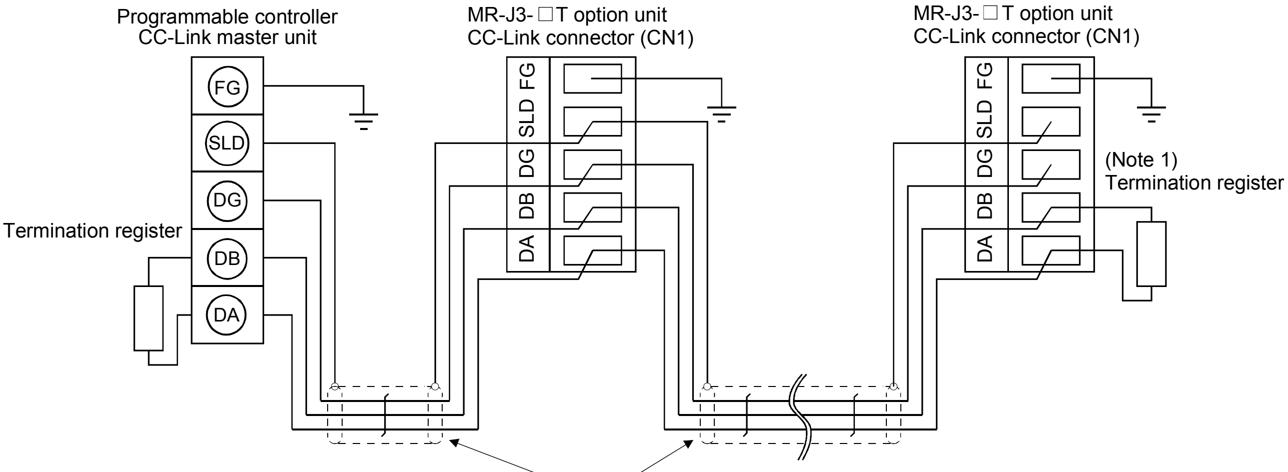

(Note 2) CC-Link Ver.1.10-compliant cable

Note 1. Use the termination resistor supplied with the programmable controller. The resistance of the termination resistor depends on the cable used. For details, refer to the open field network CC-Link catalog (L(NA)74108143).

2. Refer to (4) in this section.

(4) How to wire the CC-Link connector (CN1)

(a) Strip the sheath of the cable and separate the internal wires and braided shield.

(b) Strip the sheaths of the braided shield and internal wires and twist the cores.

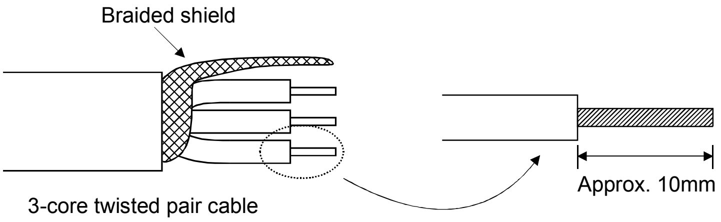

(c) Match and twist the wires and braided shield of the cable connected to the preceding axis or programmable controller and the corresponding wires and braided shield of the cable connected to the subsequent axis.

(d) For the last axis, work the termination resistor supplied to the CC-Link master unit as shown below.

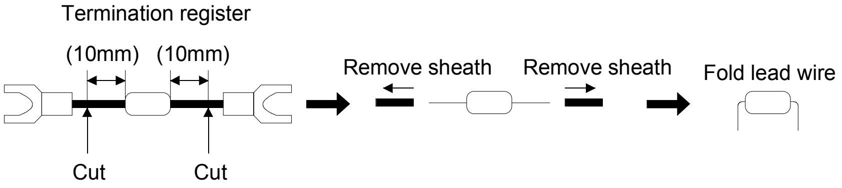

(e) Insert the core of the cable into the opening and tighten it with a flat-blade screwdriver so that it will not come off. (Tightening torque: 0.3 to 0.4N・m) When inserting the wire into the opening, make sure that the terminal screw is fully loose.

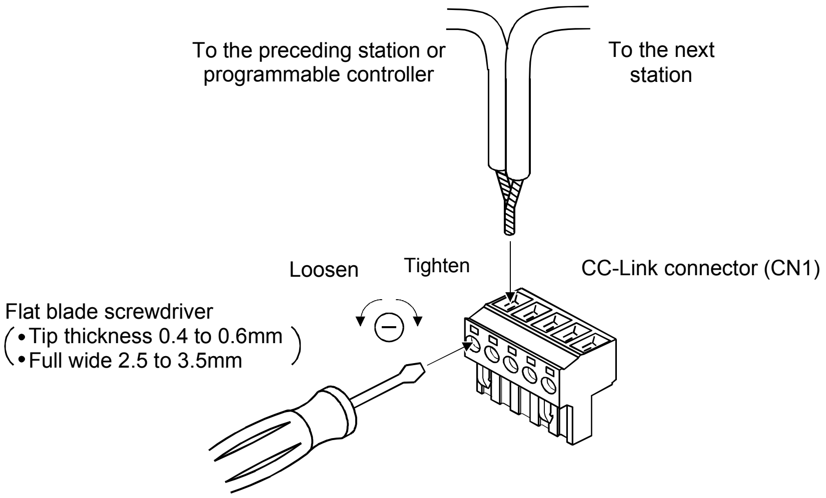

POINT

- Do not solder the cores as it may cause a contact fault.

Use of a flat-blade torque screwdriver is recommended to manage the screw tightening torque. The following table indicates the recommended products of the torque screwdriver for tightening torque management and the flat-blade bit for torque screwdriver. When managing torque with a Phillips bit, please contact your local sales office.

Product	Model	Manufacturer/Representative
Torque screwdriver	N6L TDK	Nakamura Seisakusho
Bit for torque screwdriver	B-30, flat-blade, H3.5 X 73L	Shiro Sangyo

3.2.3 Station number setting

POINT

- Be sure to set the station numbers within the range of 1 to 64. Do not set the other values.

(1) How to number the stations

Set the servo station numbers before powering on the servo amplifiers. Note the following points when setting the station numbers.

(a) Station numbers may be set within the range 1 to 64.

(b) One servo amplifier occupies 1 or 2 stations. (One station of programmable controller remote device station)

(c) Max. number of connected units: 42

Note that the following conditions must be satisfied.

$\{(1\times a) + (2\times b) + (3\times c) + (4\times d)\} \leq 64$

a: Number of 1-station occupying units

b: Number of 2-station occupying units

c: Number of 3-station occupying units (not available for MR-J3-T)

d: Number of 4-station occupying units (not available for MR-J3-T)

$\{(16\times A) + (54\times B) + (88\times C)\} \leq 2304$

A: Number of remote I/O stations ≤ 64

B: Number of remote device stations ≤ 42

C: Number of local stations ≤ 26

(d) When the number of units connected is 4, station numbers can be set as shown below.

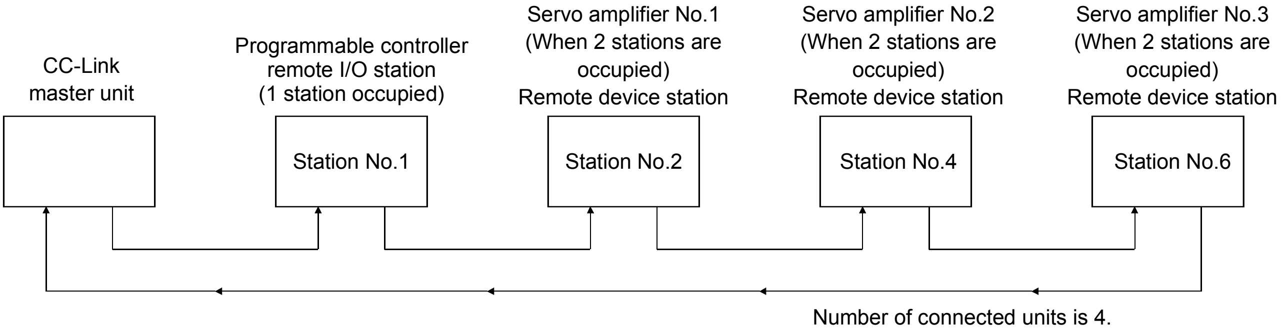

(2) Station number setting method

Set the station number with the station number switches (STATION NO.) on the servo amplifier front. The station number that may be set is any of 1 to 64 in decimal. In the initial status, the station number is set to station 1.

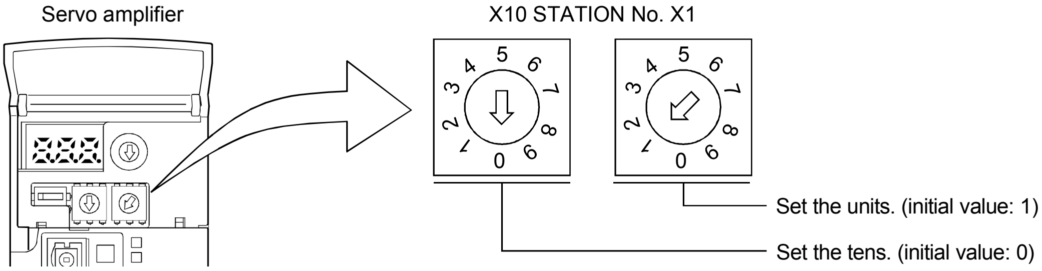

3.2.4 Communication baud rate setting

Set the transfer baud rate of CC-Link with the transfer baud rate switch (MODE) on the servo amplifier front. The initial value is set to 156kbps.

The overall distance of the system changes with the transfer speed setting. For details, refer to the CC-Link system master/local unit user's manual.

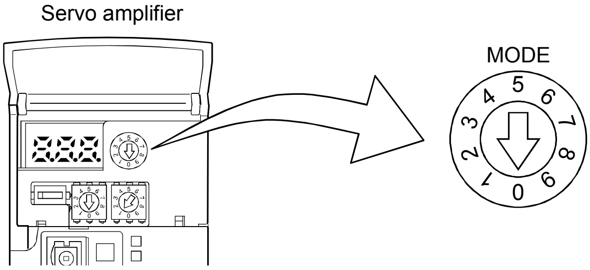

No.	Baud rate
0 (initial value)	156kbps
1	625kbps
2	2.5Mbps
3	5Mbps
4	10Mbps
5 to 9	Not used

3.2.5 Occupied station count setting

CAUTION

- To prevent a malfunction, do not change the factory setting (left) of the manufacturer setting switch (SW2).

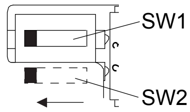

(Factory setting)

Set the number of occupied stations with the occupied station count switch (SW1) on the servo amplifier front. The usable I/O device and the number of connectable units change with the set number of occupied stations. Refer to section 3.2.3. In the initial status, the number of stations occupied is set to 1.

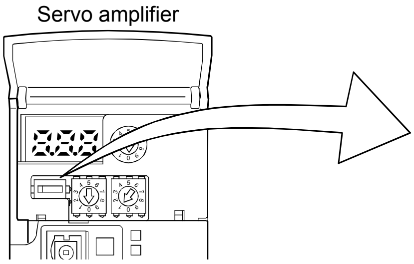

SW1 setting	Number of occupied stations
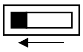 Initial value	1 station occupied
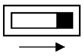	2 stations occupied

3.3 Functions

3.3.1 Function block diagram

This section explains the transfer of I/O data to/from the servo amplifier in CC-Link, using function blocks.

(1) Between the master station and servo amplifier in the CC-Link system, link refresh is normally performed at intervals of 3.5 to 18ms (512 points). The link scan time of link refresh changes with the communication speed. For details, refer to the CC-Link system master/local unit user's manual.

(2) The I/O refresh and master station sequence program are executed asynchronously. Some programmable controllers allow link scans to be synchronized with programmable controller scans.

(3) The FROM instruction from the buffer memory of the CC-Link system master/local unit is used to read data from the servo amplifier, and the TO instruction is used to write data. Some programmable controllers allow automatic refresh to be set to omit the FROM and TO instructions.

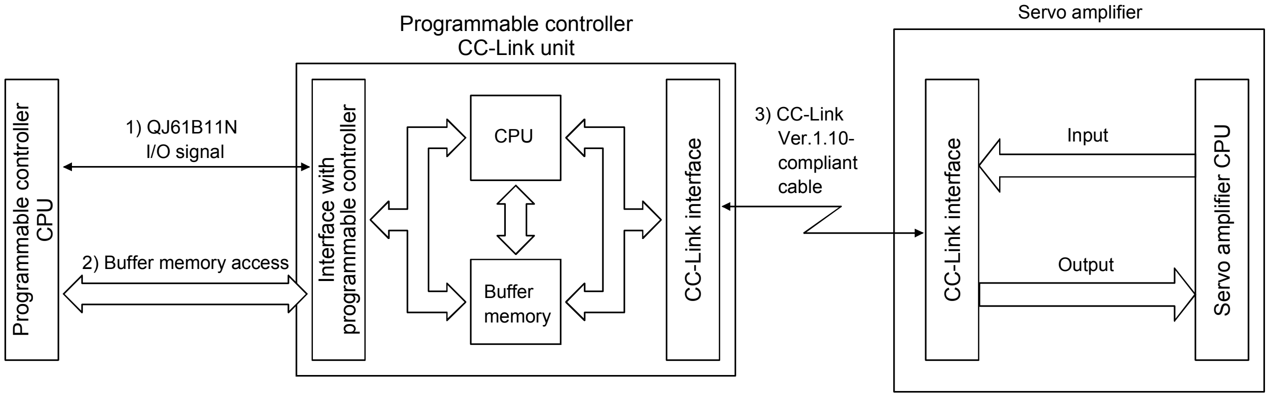

3.3.2 Functions

The following table lists the functions that may be performed from the programmable controller in the CC-Link system in the CC-Link operation mode or test operation mode.

Item	Operation mode	
	CC-Link operation mode	Test operation mode
Monitor	○	○
Operation	○	
Parameter write	○	○
Parameter read	○	○
Point table data write	○	○
Point table data read	○	○

3.4 Servo amplifier setting

(1) Servo amplifier side operation modes

This servo amplifier has the following operation modes.

Operation mode	Description
Test operation mode	Parameter unit or personal computer in which MR Configurator is installed is used to run the servo motor.
CC-Link operation mode	CC-Link communication functions are used to operate the servo with the programmable controller programs.

(2) Operation mode changing

(a) Operation mode changing conditions

Change the operation mode after making sure that.

1) The servo motor is at a stop.

2) The forward rotation start (RYn1) or reverse rotation start (RYn2) is OFF.

(b) Operation mode changing method

When changing from test operation to CC-Link operation, deselect test operation by switching power OFF/ON.

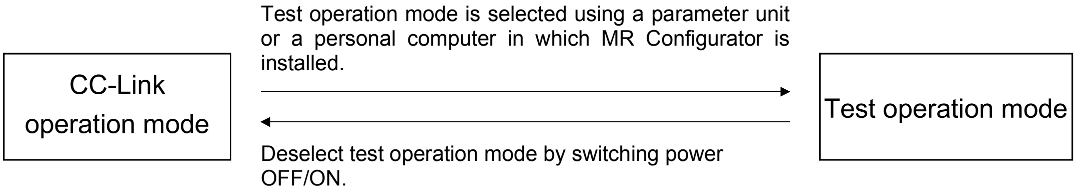

3.5 I/O signals (I/O devices) transferred to/from the programmable controller CPU

3.5.1 I/O signals (I/O devices)

The input signals (input devices) may be used as either the CC-Link or CN6 external input signals. Make selection in parameter No.PD06 to PD11, PD12 and PD14. The output signals (output devices) can be used as both the CC-Link・CN6 external output signals.

> **POINT**
>
> - In the factory-shipped status, the forward rotation stroke end (LSP), reverse rotation stroke end (LSN) and proximity dog (DOG) are valid as the CN6 external input signals.

(1) When 1 station is occupied
RYn/RXn: 32 points each, RWrn/RWwn: 4 points each

Programmable controller → Servo amplifier (RYn)			
(Note) Device No.	Signal name	Signal abbreviation	CN6 connector pin No.
RYn0	Servo-on	SON	
RYn1	Forward rotation start	ST1	
RYn2	Reverse rotation start	ST2	
RYn3	Proximity dog	DOG	2
RYn4	Forward rotation stroke end	LSP	3
RYn5	Reverse rotation stroke end	LSN	4
RYn6	Automatic/manual selection	MDO	
RYn7	Temporary stop/Restart	TSTP	
RYn8	Monitor output execution demand	MOR	
RYn9	Instruction code execution demand	COR	
RYnA	Point table No. selection 1	DI0	
RYnB	Point table No. selection 2	DI1	
RYnC	Point table No. selection 3	DI2	
RYnD	Point table No. selection 4	DI3	
RYnE	Point table No. selection 5	DI4	
RYnF	Clear	CR	
RY(n＋1)0 to RY(n＋1)9	Reserved		
RY(n＋1)A	Reset	RES	
RY(n＋1)B to RY(n＋1)F	Reserved		

Servo amplifier → Programmable controller (RXn)			
(Note) Device No.	Signal name	Signal abbreviation	CN6 connector pin No.
RXn0	Ready	RD	14
RXn1	In position	INP	
RXn2	Rough match	CPO	
RXn3	Home position return completion	ZP	16
RXn4	Limiting torque	TLC	
RXn5	Reserved		
RXn6	Electromagnetic brake interlock	MBR	
RXn7	Temporary stop	PUS	
RXn8	Monitoring	MOF	
RXn9	Instruction code execution completion	COF	
RXnA	Warning	WNG	
RXnB	Battery warning	BWNG	
RXnC	Movement completion	MEND	
RXnD	Dynamic brake interlock	DB	
RXnE	Position range output	POT	
RXnF	Reserved		
RX(n＋1)0 to RX(n＋1)9	Reserved		
RX(n＋1)A	Trouble	ALM	15
RX(n＋1)B	Remote station communication ready	CRD	
RX(n＋1)C to RX(n＋1)F	Reserved		

Programmable controller → Servo amplifier (RWwn)	
Address No.	Signal name
RWwn	Monitor 1
RWwn＋1	Monitor 2
RWwn＋2	Instruction code
RWwn＋3	Writing data

Servo amplifier → Programmable controller (RWrn)	
Address No.	Signal name
RWrn	Monitor 1 data
RWrn＋1	Monitor 2 data
RWrn＋2	Respond code
RWrn＋3	Reading data

Note. "n" depends on the station number setting.

(2) When 2 stations are occupied

RXn/RYn: 64 points each, RWrn/RWwn: 8 points each

Programmable controller → Servo amplifier (RYn)			
(Note 1) Device No.	Signal name	Signal abbreviation	CN6 connector pin No.
RYn0	Servo-on	SON	
RYn1	Forward rotation start	ST1	
RYn2	Reverse rotation start	ST2	
RYn3	Proximity dog	DOG	2
RYn4	Forward rotation stroke end	LSP	3
RYn5	Reverse rotation stroke end	LSN	4
RYn6	Automatic/manual selection	MDO	
RYn7	Temporary stop/Restart	TSTP	
RYn8	Monitor output execution demand	MOR	
RYn9	Instruction code execution demand	COR	
RYnA	Point table No. selection 1	DI0	
RYnB	Point table No. selection 2	DI1	
RYnC	Point table No. selection 3	DI2	
RYnD	Point table No. selection 4	DI3	
RYnE	Point table No. selection 5	DI4	
RYnF	Clear	CR	
RY(n＋1)0 to RY(n＋1)F	Reserved		
RY(n＋2)0	Position command execution demand (Note)		
RY(n＋2)1	Speed command execution demand (Note)		
RY(n＋2)2	Reserved		
RY(n＋2)3	Point table No. selection 6	DI5	
RY(n＋2)4	Point table No. selection 7	DI6	
RY(n＋2)5	Point table No. selection 8	DI7	
RY(n＋2)6	Internal torque limit selection	TL1	
RY(n＋2)7	Proportion control	PC	
RY(n＋2)8	Gain switching	CDP	
RY(n＋2)9	Reserved		
RY(n＋2)A	Position/speed specifying system selection		
RY(n＋2)B	Absolute value/incremental value selection		
RY(n＋2)C to RY(n＋2)F	Reserved		
RY(n＋3)0 to RY(n＋3)9	Reserved		
RY(n＋3)A	Reset	RES	
RY(n＋3)B to RY(n＋3)F	Reserved		

Servo amplifier → Programmable controller (RXn)			
(Note 1) Device No.	Signal name	Signal abbreviation	CN6 connector pin No.
RXn0	Ready	RD	14
RXn1	In position	INP	
RXn2	Rough match	CPO	
RXn3	Home position return completion	ZP	16
RXn4	Limiting torque	TLC	
RXn5	Reserved		
RXn6	Electromagnetic brake interlock	MBR	
RXn7	Temporary stop	PUS	
RXn8	Monitoring	MOF	
RXn9	Instruction code execution completion	COF	
RXnA	Warning	WNG	
RXnB	Battery warning	BWNG	
RXnC	Movement completion	MEND	
RXnD	Dynamic brake interlock	DB	
RXnE	Position range output	POT	
RXnF to RX(n＋1)F	Reserved		
RX(n＋2)0	Position command execution completion		
RX(n＋2)1	Speed command execution completion		
RX(n＋2)2	Point table No. output 1	PT0	
RX(n＋2)3	Point table No. output 2	PT1	
RX(n＋2)4	Point table No. output 3	PT2	
RX(n＋2)5	Point table No. output 4	PT3	
RX(n＋2)6	Point table No. output 5	PT4	
RX(n＋2)7	Point table No. output 6	PT5	
RX(n＋2)8	Point table No. output 7	PT6	
RX(n＋2)9	Point table No. output 8	PT7	
RX(n＋2)A to RX(n＋2)F	Reserved		
RX(n＋3)0 to RX(n＋3)9	Reserved		
RX(n＋3)A	Trouble	ALM	15
RX(n＋3)B	Remote station communication ready	CRD	
RX(n＋3)C to RX(n＋3)F	Reserved		

Note. "n" depends on the station number setting.

Programmable controller → Servo amplifier (RWwn)	
(Note 1) Address No.	Signal name
RWwn	(Note 2) Monitor 1
RWwn＋1	(Note 2) Monitor 2
RWwn＋2	Instruction code
RWwn＋3	Writing data
RWwn＋4	(Note 3) Position command data lower 16 bit/Point table No.
RWwn＋5	Position command data upper 16 bit
RWwn＋6	(Note 4) Speed command data/Point table No.
RWwn＋7	Reserved

Servo amplifier → Programmable controller (RWrn)	
(Note 1) Address No.	Signal name
RWrn	Monitor 1 data lower 16 bit
RWwn＋1	Monitor 1 data upper 16 bit
RWwn＋2	Respond code
RWwn＋3	Reading data
RWwn＋4	Reserved
RWwn＋5	Monitor 2 data lower 16 bit
RWwn＋6	Monitor 2 data upper 16 bit
RWwn＋7	Reserved

Note 1. "n" depends on the station number setting.

2. Specify the code of the lower 16 bit as the monitor code of 32-bit data.
3. When the parameter No.PC30 setting is "□□□0", specify the point table No. in RWwn＋4. When the parameter No.PC30 setting is "□□□1" or "□□□2", specify the position data in RWwn＋4/RWwn＋5 and turn ON Position command execution demand (RY(n＋2)0).
4. When the parameter No.PC30 setting is "□□□1", specify the point table No. in RWwn＋6. When the parameter No.PC30 setting is "□□□2", specify the speed data in RWwn＋6, and turn ON Speed command execution demand (RY(n＋2)1). When setting the parameter No.PC30 to "□□□2", always set the acceleration/deceleration time constant in the point table No.1. When the parameter No.PC30 setting is "□□□0", the RWwn＋6 value is not used.

3.5.2 Detailed explanation of I/O signals

(1) Input signals (Input devices)

The remarks in the table indicate the following:

∗1: Can be used as external input signals of CN6 connector by setting parameters No.PD06 to PD08 and parameter No.PD12 PD14.

∗2: Can be automatic turned ON internally by setting parameters No.PD01 PD04.

∗3: Can be automatically turned ON internally by setting parameter No.PD03.

The device whose Device No. field has an oblique line cannot be used in CC-Link.

Signal name (Device name)	Description	Device No.		Remarks
		1 station occupied	2 stations occupied	
Servo-on	Turning RYn0 ON powers on the base circuit, making operation ready to start. (Servo on status) Turning it OFF powers off the base circuit, coasting the servo motor. (Servo off status)	RYn0	RYn0	∗1 ∗2
Forward rotation start	1. In absolute value command system Turning RYn1 ON for automatic operation executes positioning once on the basis of the position data set to the point table. Turning RYn1 ON for a home position return immediately starts a home position return. Keeping RYn1 ON for JOG operation performs rotation in the forward rotation direction. Forward rotation indicates the address increasing direction. 2. In incremental value command system Turning RYn1 ON for automatic operation executes positioning once in the forward rotation direction on the basis of the position data set to the point table. Turning RYn1 ON for a home position return immediately starts a home position return. Keeping RYn1 ON for JOG operation performs rotation in the forward rotation direction. Forward rotation indicates the address increasing direction.	RYn1	RYn1	∗1
Reverse rotation start	Use this device in the incremental value command system. Turning RYn2 ON for automatic operation executes positioning once in the reverse rotation direction on the basis of the position data set to the point table. Keeping RYn2 ON for JOG operation performs rotation in the reverse rotation direction. Reverse rotation indicates the address decreasing direction. Reverse rotation start (RYn2) is also used as the start signal of the high-speed automatic positioning function to the home position.	RYn2	RYn2	∗1

<table>
<tr><th rowspan="2">Signal name</th><th rowspan="2">Description</th><th colspan="2">Device No.</th><th rowspan="2">Remarks</th></tr>
<tr><th>1 station occupied</th><th>2 stations occupied</th></tr>
<tr><td>Proximity dog</td><td>In the shipment status, the proximity dog external input signal (CN6-2) is valid. For use in CC-Link, make it usable in parameter No.PD14. When RYn3 is turned OFF, the proximity dog is detected. The polarity of dog detection can be changed using parameter No.PD16.
<table><tr><th>Parameter No.PD16</th><th>Proximity dog (RYn3) detection polarity</th></tr><tr><td>□0□□ (initial value)</td><td>OFF</td></tr><tr><td>□1□□</td><td>ON</td></tr></table></td><td>RYn3</td><td>RYn3</td><td>＊1</td></tr>
<tr><td>Forward rotation stroke end</td><td rowspan="2">In the factory-shipped status, the forward rotation stroke end is valid as the external input signal (CN6-3) and the reverse rotation stroke end is valid as the external input signal (CN6-4). Before operation, short between CN6-3 and DOCOM, and between CN6-4 and DOCOM. Opening them causes a sudden stop, resulting in servo lock.
For use in CC-Link, make it usable in parameter No.PD12.
When starting operation, turn RYn4/RYn5 to ON. Turning it to OFF causes a sudden stop, resulting in servo lock. A stopping method can be changed in parameter No.PD20.
When not using the forward/reverse rotation stroke end, set "Automatic ON" in parameter No.PD01.
<table><tr><th colspan="2">(Note) RY of CC-Link</th><th colspan="2">Operation</th></tr><tr><th>RYn4</th><th>RYn5</th><th>CCW direction</th><th>CW direction</th></tr><tr><td>1</td><td>1</td><td>○</td><td>○</td></tr><tr><td>0</td><td>1</td><td></td><td>○</td></tr><tr><td>1</td><td>0</td><td>○</td><td></td></tr><tr><td>0</td><td>0</td><td></td><td></td></tr></table>Note. 0: OFF 1: ON</td><td>RYn4</td><td>RYn4</td><td>＊1
＊2</td></tr>
<tr><td>Reverse rotation stroke end</td><td>RYn5</td><td>RYn5</td><td>＊1
＊2</td></tr>
<tr><td>Automatic/manual selection</td><td>Turning RYn6 ON selects the automatic operation mode, and turning it OFF selects the manual operation mode.</td><td>RYn6</td><td>RYn6</td><td>＊1
＊3</td></tr>
<tr><td>Temporary stop/Restart</td><td>Turning RYn7 ON during automatic operation makes a temporary stop.
Turning RYn7 ON again makes a restart.
Forward rotation start (RYn1) or Reverse rotation start (RYn2) is ignored if it is turned ON during a temporary stop.
When the automatic operation mode is changed to the manual operation mode during a temporary stop, the movement remaining distance is erased.
During a home position return or during JOG operation, Temporary stop/Restart input is ignored.</td><td>RYn7</td><td>RYn7</td><td></td></tr>
</table>

<table>
<tr><th rowspan="2">Signal name</th><th rowspan="2">Description</th><th colspan="2">Device No.</th><th rowspan="2">Remarks</th></tr>
<tr><th>1 station occupied</th><th>2 stations occupied</th></tr>
<tr><td>Monitor output execution demand</td><td>When RYn8 is turned ON, the following data and signals are set. At the same time, RXn8 turns ON. While RYn8 is ON, the monitor values are kept updated.
1) When 1 station is occupied
Remote register RWrn: Data demanded by Monitor 1 (RWwn)
Remote register RWrn＋1: Data demanded by Monitor 2 (RWwn+1)
Remote register RWrn＋2: Respond code indicating normal or error
2) When 2 stations are occupied
Remote register RWrn: Lower 16 bits of data demanded by Monitor 1 (RWwn)
Remote register RWrn＋1: Upper 16 bits of data demanded by Monitor 1 (RWwn)
Remote register RWrn＋5: Lower 16 bits of data demanded by Monitor 2 (RWwn+2)
Remote register RWrn＋6: Upper 16 bits of data demanded by Monitor 2 (RWwn+2)
Remote register RWrn＋2: Respond code indicating normal or error</td><td>RYn8</td><td>RYn8</td><td></td></tr>
<tr><td>Instruction code execution demand</td><td>Turning RYn9 ON executes the processing corresponding to the instruction code stored in remote register RWwn＋2.
After completion of instruction code execution, the respond code indicating normal or error is set to RWrn＋2. At the same time, RXn9 turns ON.
Refer to section 16.2.4 for details.</td><td>RYn9</td><td>RYn9</td><td></td></tr>
<tr><td>Point table No. selection 1</td><td rowspan="8">The point table No. and the home position return are selected by RYnA to RY(n＋2)5.
<table>
<tr><th rowspan="2">Point table No.</th><th colspan="8">(Note 1) RY of CC-Link</th></tr>
<tr><th>RY (n+2)5</th><th>RY (n+2)4</th><th>RY (n+2)3</th><th>RYnE</th><th>RYnD</th><th>RYnC</th><th>RYnB</th><th>RYnA</th></tr>
<tr><td>(Note 2)</td><td>0</td><td>0</td><td>0</td><td>0</td><td>0</td><td>0</td><td>0</td><td>0</td></tr>
<tr><td>1</td><td>0</td><td>0</td><td>0</td><td>0</td><td>0</td><td>0</td><td>0</td><td>1</td></tr>
<tr><td>2</td><td>0</td><td>0</td><td>0</td><td>0</td><td>0</td><td>0</td><td>1</td><td>0</td></tr>
<tr><td>3</td><td>0</td><td>0</td><td>0</td><td>0</td><td>0</td><td>0</td><td>1</td><td>1</td></tr>
<tr><td>4</td><td>0</td><td>0</td><td>0</td><td>0</td><td>0</td><td>1</td><td>0</td><td>0</td></tr>
<tr><td>⋮</td><td>⋮</td><td>⋮</td><td>⋮</td><td>⋮</td><td>⋮</td><td>⋮</td><td>⋮</td><td>⋮</td></tr>
<tr><td>254</td><td>1</td><td>1</td><td>1</td><td>1</td><td>1</td><td>1</td><td>1</td><td>0</td></tr>
<tr><td>255</td><td>1</td><td>1</td><td>1</td><td>1</td><td>1</td><td>1</td><td>1</td><td>1</td></tr>
</table>
Note 1. 0: OFF 1: ON
2. Home position return is a setting</td><td>RYnA</td><td>RYnA</td><td rowspan="8">＊1
＊2</td></tr>
<tr><td>Point table No. selection 2</td><td>RYnB</td><td>RYnB</td></tr>
<tr><td>Point table No. selection 3</td><td>RYnC</td><td>RYnC</td></tr>
<tr><td>Point table No. selection 4</td><td>RYnD</td><td>RYnD</td></tr>
<tr><td>Point table No. selection 5</td><td>RYnE</td><td>RYnE</td></tr>
<tr><td>Point table No. selection 6</td><td></td><td>RY(n＋2)3</td></tr>
<tr><td>Point table No. selection 7</td><td></td><td>RY(n＋2)4</td></tr>
<tr><td>Point table No. selection 8</td><td></td><td>RY(n＋2)5</td></tr>
<tr><td>Clear</td><td>When the parameter No.PD22 setting is "□□□1", the position control counter droop pulses is cleared at the leading edge of RYnF. The pulse width should be 10ms or more.
When the parameter No.PD22 setting is "□□□2", the pulses are always cleared while RYnF is on.</td><td>RYnF</td><td>RYnF</td><td>＊1
＊2</td></tr>
</table>

Signal name	Description	Device No.		Remarks
		1 station occupied	2 stations occupied	
Position command execution demand	When RY(n＋2)0 is turned ON, the point table No. or position command data set to remote register RWwn＋4/RWwn＋5 is set. When it is set to the servo amplifier, the respond code indicating normal or error is set to RWrn＋2. At the same time, Position command execution completion RX(n＋2)0 turns ON. Refer to section 3.6.3 for details.		RY(n＋2)0	
Speed command execution demand	When RY(n＋2)1 is turned ON, the point table No. or Speed command data set to remote register RWwn＋6 is set. When it is set to the servo amplifier, the respond code indicating normal or error is set to RWrn＋2. At the same time, Speed command execution completion RX(n＋2)1 turns ON. Refer to section 3.6.3 for details.		RY(n＋2)1	
Internal torque limit selection	Turning RY(n＋2)6 OFF makes the torque limit value of parameter No.PA11 (forward rotation torque limit) ･ parameter No.PA12 (reverse rotation torque limit) valid, and turning it ON makes that of parameter No.PC35 (internal torque limit). (Refer to section 4.6.3)		RY(n＋2)6	＊1
Proportion control	When RY(n＋2)7 is turned ON, the speed amplifier is switched from the proportional integral type to the proportional type. If the servo motor at a stop is rotated even one pulse by an external factor, it develops torque in an attempt to compensate for a position shift. When the shaft is locked mechanically after Movement completion (RXnC) is turned OFF, for example, turning Proportion control (RY(n＋2)7) ON as soon as Movement completion (RXnC) turns OFF allows control of unnecessary torque developed in an attempt to compensate for a position shift. When the shaft is to be locked for an extended period of time, turn Internal torque limit selection (RY(n＋2)6) ON simultaneously with Proportion control (RY(n＋2)7) to make the torque not more than the rated torque using Internal torque limit (parameter No.PC35).		RY(n＋2)7	＊1 ＊2
Gain switching	When RY(n＋2)8 is turned ON, the load inertia moment ratio and the corresponding gain values change to the values of parameter No.PB29 to PB34. To change the gain using RY(n＋2)8, make the auto tuning invalid.		RY(n+2)8	＊1
Position/speed specifying system selection	Select how to give a position command/Speed command. (Refer to section 3.6.3.) OFF: RY of CC-Link-based position/speed specifying system Specifying the point table No. with Point table No. selection (RYnA to RYnE) gives a position command/Speed command. ON : Remote register-based position/speed specifying system Setting the instruction code to the remote register (RWwn＋4 to RWwn＋6) gives a position command/Speed command. Set the parameter No.PC30 (direct specification selection) to "□□□2".		RY(n＋2)A	

Signal name	Description	Device No.		Remarks
		1 station occupied	2 stations occupied	
Absolute value/incremental value selection	RY(n＋2)B is made valid when the remote register-based position/speed specifying system is selected with Position/speed specifying system selection (RY(n＋2)A) and the absolute value command system is selected in parameter No.PA01. Turn RY(n＋2)B OFF or ON to select whether the set position data is in the absolute value command system or incremental value command system. OFF: Position data is handled as an absolute value. ON : Position data is handled as an incremental value.		RY(n＋2)B	
Reset	Keeping RY(n＋1)A or RY(n＋3)A ON for 50ms or longer allows an alarm to be deactivated. Some alarms cannot be deactivated by Reset RY(n＋1)A or RY(n＋3)A. (Refer to section 11.4.1.) If RY(n＋1)A or RY(n＋3)A is turned ON with no alarm occurring, the base circuit will not be shut off. When "□□1□" is set in parameter No.PD20 (function selection D-1), the base circuit is shut off. This device is not designed to make a stop. Do not turn it ON during operation.	RY(n＋1)A	RY(n＋3)A	＊1
Forced stop	This device is exclusively used as a CN6 external input signal. It cannot be used for CC-Link. Turning EMG off brings the motor to a forced stop state. At this time, the status is servo-off and the dynamic brake is operated to bring the motor to a sudden stop. Turn EMG on in the forced stop state to reset that state.			

(2) Output signals (Output device)

POINT

- The output devices can be used for both the RX of CC-Link and the external output signals of CN6 connector.

The signal whose Device No. field has an oblique line cannot be used in CC-Link.

Signal name	Description	Device No.	
		1 station occupied	2 stations occupied
Ready	In the factory-shipped status, a ready is assigned to the CN6-14 pin as an external output signal. RXn0 turns ON when the servo amplifier is ready to operate after servo-on.	RXn0	RXn0
In position	RXn1 turns ON when the droop pulse value is within the preset in-position range. The in-position range can be changed using parameter No.PA10. Increasing the in-position range may result in a continuous conduction status during low-speed rotation. RXn1 turns ON at servo-on.	RXn1	RXn1
Rough match	RXn2 turns ON when the command remaining distance becomes less than the rough match output range set in the parameter. This is not outputted during base circuit shut-off. RXn2 turns ON at servo-on.	RXn2	RXn2
Home position return completion	In the factory-shipped status, the home position return completion is assigned to the CN6-16 pin as an external output signal. RXn3 turns ON when a home position return is completed. RXn3 turns ON at completion of a home position return. In an absolute position detection system, RXn3 turns ON when operation is ready to start, but turns OFF in any of the following cases. 1) Servo-on (RYn0) is turned OFF. 2) Forced stop (EMG) is turned OFF. 3) Reset (RY(n＋1)A or RY(n＋3)A) is turned ON. 4) Alarm occurs. 5) Forward rotation stroke end (RYn4) or Reverse rotation stroke end (RYn5) is turned OFF. 6) Home position return has not been made after product purchase. 7) Home position return has not been made after occurrence of Absolute position erase (A25) or Absolute position counter warning (AE3). 8) Home position return has not been made after electronic gear change. 9) Home position return has not been made after the absolute position detection system was changed from invalid to valid. 10) Parameter No.PA14 (Rotation direction selection) has been changed. 11) Software limit is valid. 12) While a home position return is being made. When any of 1) to 12) has not occurred and a home position return is already completed at least once, Home position return completion (RXn3) turns to the same output status as Ready (RXn0).	RXn3	RXn3
Limiting torque	RXn4 turns ON when the torque is reached at the time of torque generation.	RXn4	RXn4
Electromagnetic brake interlock	RXn6 turns OFF at servo-off or alarm occurrence. At alarm occurrence, it turns OFF independently of the base circuit status.	RXn6	RXn6
Temporary stop	RXn7 turns ON when deceleration is started to make a stop by Temporary stop/Restart (RYn7). When Temporary stop/Restart (RYn7) is made valid again to resume operation, RXn7 turns OFF.	RXn7	RXn7
Monitoring	Refer to Monitor output execution demand (RYn8).	RXn8	RXn8

<table>
<tr><th rowspan="2">Signal name</th><th rowspan="2">Description</th><th colspan="2">Device No.</th></tr>
<tr><th>1 station occupied</th><th>2 stations occupied</th></tr>
<tr><td>Instruction code execution completion</td><td>Refer to Instruction code execution demand (RYn9).</td><td>RXn9</td><td>RXn9</td></tr>
<tr><td>Warning</td><td>RXnA turns ON when a warning occurs.
When no warning has occurred, RXnA turns OFF within about 1s after power-on.</td><td>RXnA</td><td>RXnA</td></tr>
<tr><td>Battery warning</td><td>RXnB turns ON when Open battery cable warning (A92) or Battery warning (A9F) occurs. When no battery warning has occurred, RXnB turns OFF within about 1s after power-on.</td><td>RXnB</td><td>RXnB</td></tr>
<tr><td>Movement completion</td><td>RXnC turns ON when In position (RXn1) turns ON and the command remaining distance is "0".
RXnC turns ON at servo-on.</td><td>RXnC</td><td>RXnC</td></tr>
<tr><td>Dynamic brake interlock</td><td>RXnD turns ON when the dynamic brake needs to operate. When using the external dynamic brake on the servo amplifier of 11 kW or more, this device is required. (Refer to section 14.6.) For the servo amplifier of 7kw or less, it is not necessary to use this device.</td><td>RXnD</td><td>RXnD</td></tr>
<tr><td>Position range</td><td>RXnE turns ON when the actual current position falls within the range set in the parameter.
It is OFF when a home position return is not yet completed or while the base circuit is off.</td><td>RXnE</td><td>RXnE</td></tr>
<tr><td>Position command execution completion</td><td>Refer to Speed command execution demand (RY(n+2)0).</td><td></td><td>RX(n+2)0</td></tr>
<tr><td>Speed command execution completion</td><td>Refer to Position command execution demand (RY(n+2)1). This device is required when using the external dynamic brake with a servo amplifier of 11kW or more. (Refer to section 14.6.)
This is not required with servo amplifiers of 7kW or less.</td><td></td><td>RX(n+2)1</td></tr>
<tr><td>Point table No. output 1</td><td rowspan="8">As soon as Movement completion (RXnC) turns ON, the point table No. is output in 8-bit code.
<table>
<tr><th rowspan="2">Point table No.</th><th colspan="8">(Note) RX of CC-Link</th></tr>
<tr><th>RX (n+2)9</th><th>RX (n+2)8</th><th>RX (n+2)7</th><th>RX (n+2)6</th><th>RX (n+2)5</th><th>RX (n+2)4</th><th>RX (n+2)3</th><th>RX (n+2)2</th></tr>
<tr><td>1</td><td>0</td><td>0</td><td>0</td><td>0</td><td>0</td><td>0</td><td>0</td><td>1</td></tr>
<tr><td>2</td><td>0</td><td>0</td><td>0</td><td>0</td><td>0</td><td>0</td><td>1</td><td>0</td></tr>
<tr><td>3</td><td>0</td><td>0</td><td>0</td><td>0</td><td>0</td><td>0</td><td>1</td><td>1</td></tr>
<tr><td>4</td><td>0</td><td>0</td><td>0</td><td>0</td><td>0</td><td>1</td><td>0</td><td>0</td></tr>
<tr><td>·
·
·</td><td>·
·
·</td><td>·
·
·</td><td>·
·
·</td><td>·
·
·</td><td>·
·
·</td><td>·
·
·</td><td>·
·
·</td><td>·
·
·</td></tr>
<tr><td>254</td><td>1</td><td>1</td><td>1</td><td>1</td><td>1</td><td>1</td><td>1</td><td>0</td></tr>
<tr><td>255</td><td>1</td><td>1</td><td>1</td><td>1</td><td>1</td><td>1</td><td>1</td><td>1</td></tr>
</table>
Note. 0: OFF 1: ON

RX(n+2)2 to RX(n+2)9 turn OFF in any of the following statuses.
・Power on
・Servo off
・During home position return
・Home position return completion
In any of the following statuses, RX(n+2)2 to RX(n+2)9 maintain their pre-change status (ON/OFF).
・When operation mode is changed
・When Automatic/manual selection (RYn6) is turned from OFF to ON or from ON to OFF to change the operation mode.
・During manual operation
・During execution of automatic positioning to home position</td><td rowspan="8"></td><td>RX(n+2)2</td></tr>
<tr><td>Point table No. output 2</td><td>RX(n+2)3</td></tr>
<tr><td>Point table No. output 3</td><td>RX(n+2)4</td></tr>
<tr><td>Point table No. output 4</td><td>RX(n+2)5</td></tr>
<tr><td>Point table No. output 5</td><td>RX(n+2)6</td></tr>
<tr><td>Point table No. output 6</td><td>RX(n+2)7</td></tr>
<tr><td>Point table No. output 7</td><td>RX(n+2)8</td></tr>
<tr><td>Point table No. output 8</td><td>RX(n+2)9</td></tr>
</table>

Signal name	Description	Device No.	
		1 station occupied	2 stations occupied
Trouble	A trouble is assigned to the CN6-15 pin as an external output signal. RX(n+1)A or RX(n+3)A turns ON when the protective circuit is activated to shut off the base circuit. When no alarm has occurred, RX(n+1)A or RX(n+3)A turns OFF within about 1.5s after power is switched ON.	RX(n+1)A	RX(n+3)A
Remote station communication ready	This signal turns ON at power-on and turns off at a trouble occurrence or in the reset (RY(n+1)A or RY(n+3)A) ON status.	RX(n+1)B	RX(n+3)B

(3) Remote registers

The signal whose Remote Register field has an oblique line cannot be used.

(a) Input (Programmable controller → Servo amplifier)

Remote register		Signal name	Description	Setting range
1 station occupied	2 stations occupied			
RWwn	RWwn	Monitor 1	Demands the status indication data of the servo amplifier. 1) When 1 station is occupied Setting the monitor code of the status indication item to be monitored to RWwn and turning RYn8 to ON sets data to RWrn. RXn8 turns on at the same time. 2) When 2 stations are occupied Setting the monitor code of the status indication item to be monitored to RWwn and turning RYn8 to ON sets data to RWrn. RXn8 turns on at the same time. When demanding 32-bit data, specifying the lower 16-bit code No. and turning RYn8 to ON sets the lower 16-bit data to RWwn and the upper 16-bit data to RWrn+1. Data is stored in the RYn8. RXn8 turns on at the same time. Refer to section 3.5.3 for the item of the monitor code of the status indication.	Refer to section 3.5.3.
RWwn+1	RWwn+1	Monitor 2	Demands the status indication data of the servo amplifier. 1) When 1 station is occupied Setting the monitor code of the status indication item to be monitored to RWwn+1 and turning RYn8 to ON sets data to RWrn+1. RXn8 turns on at the same time. 2) When 2 stations are occupied Setting the monitor code of the status indication item to be monitored to RWwn+1 and turning RYn8 to ON sets data to RWrn+5. RXn8 turns on at the same time. When demanding 32-bit data, specifying the lower 16-bit code No. and turning RYn8 to ON set the lower 16-bit data to RWwn+5 and the upper 16-bit data to RWrn+6. Data is stored in the RYn8. RXn8 turns on at the same time. Refer to section 3.5.3 for the item of the monitor code of the status indication.	Refer to section 3.5.3.

Remote register		Signal name	Description	Setting range
1 station occupied	2 stations occupied			
RWwn+2	RWwn+2	Instruction code	Sets the instruction code used to perform parameter or point table data read and write, alarm reference or the like. Setting the instruction code No. to RWwn+2 and turning RYn9 to ON execute the instruction. RXn9 turns to ON upon completion of instruction execution. Refer to section 3.5.4 (1) for instruction code No. definitions.	Refer to section 3.5.4 (1).
RWwn+3	RWwn+3	Writing data	Sets the written data used to perform parameter or point table data write, alarm history clear or the like. Setting the written data to RWwn+3 and turning RYn9 to ON write the data to the servo amplifier. RXn9 turns to ON upon completion of write. Refer to section 3.5.4 (2) for written data definitions.	Refer to section 3.5.4 (2).
	RWwn+4	Point table No./Position command data lower 16 bit	Set the point table No. to be executed in the automatic operation mode when 2 stations are occupied. When the point table No. is set to RWwn+4 and RY(n+2)0 is turned ON, the point table No. is set to the servo amplifier. On completion of setting, RX(n+2)0 turns ON. When the point table is not used, set the position command data. When the lower 16 bits are set to RWwn+4 and the upper 16 bits to RWwn+5, and RY(n+2)0 is turned ON, the position command data in the upper and lower 16 bits are written. On complete of write, RX(n+2)0 turns ON. Use parameter No.PC30 to select whether point table No. setting or position command data setting will be made. Refer to section 3.6.3 for details of Point table No./Position command data.	Point table No.: 0 to 255 Absolute value command: Position command data: －999999 to 999999 Incremental value command: Position command data: 0 to 999999
	RWwn+5	Position command data upper 16 bit		
	RWwn+6	Point table No./Speed command data	When the point table is not used, set the point table No. to be executed or the Speed command data (servo motor speed [r/min]). When the point table No. is set to RWwn+6 and RY(n+2)1 is turned ON, the point table No. or Speed command data is set to the servo amplifier. On completion of setting, RX(n+2)1 turns ON. Use parameter No.PC30 to select whether point table No. setting or Speed command data setting will be made. Refer to section 3.6.3 for details of Point table No./Speed command data. When setting the servo motor speed in this remote register, always set the acceleration/deceleration time constant in the point table No.1.	Point table No.: 0 to 255 Speed command data: 0 to permissible speed

(b) Output (Servo amplifier → Programmable controller)

Note that the data set to RWrn and RWrn+1 depends on whether 1 station or 2 stations are occupied.

If you set inappropriate code No. or data to the remote register input, the error code is set to respond code (RWrn+2). Refer to section 3.5.5 for the error code.

When 1 station is occupied

Remote register	Signal name	Description
RWrn	Monitor 1 data	The data of the monitor code set to RWwn is set.
RWrn+1	Monitor 2 data	The data of the monitor code set to RWwn+1 is set.
RWrn+2	Respond code	"0000" is set when the codes set to RWwn to RWwn+3 are executed normally.
RWrn+3	Reading data	Data corresponding to the read code set to RWwn+2 is set.

When 2 stations are occupied

Remote register	Signal name	Description
RWrn	Monitor 1 data lower 16bit	The lower 16 bits of the data of the monitor code set to RWwn are set.
RWrn+1	Monitor 1 data upper 16bit	The upper 16 bits of the data of the monitor code set to RWwn are set. A sign is set if there are no data in the upper 16 bits.
RWrn+2	Respond code	"0000" is set when the codes set to RWwn to RWwn+6 are executed normally.
RWrn+3	Reading data	Data corresponding to the read code set to RWwn+2 is set.
RWrn+4		
RWrn+5	Monitor 2 data lower 16bit	The lower 16 bits of the data of the monitor code set to RWwn+1 are set.
RWrn+6	Monitor 2 data upper 16bit	The upper 16 bits of the data of the monitor code set to RWwn+1 are set. A sign is set if there are no data in the upper 16 bits.
RWrn+7		

3.5.3 Monitor codes

To demand 32-bit data when 2 stations are occupied, specify the lower 16-bit code No. Use any of the instruction codes 0101 to 011C to read the decimal point position (multiplying factor) of the status indication.
Setting any code No. that is not given in this section will set the error code (□□1□) to respond code (RWrn+2). At this time, "0000" is set to RWrn, RWrn+1, RWrn+5 and RWrn+6.
For monitor data, refer to section 8.5.3 (2).

Code No.		Monitored item	Answer data (Servo amplifier → Programmable controller)	
1 station occupied	2 stations occupied		Data length	Unit
0000h	0000h			
0001h	0001h	Current position lower 16bit	16bit	×10^{STM}[mm] or ×10^{STM}[inch]
0002h		Current position upper 16bit	16bit	
0003h	0003h	Command position lower 16bit	16bit	
0004h		Command position upper 16bit	16bit	
0005h	0005h	Command remaining distance lower 16bit	16bit	
0006h		Command remaining distance upper 16bit	16bit	
0007h	0007h			
0008h	0008h	Point table No.	16bit	[No.]
0009h				
000Ah	000Ah	Feedback pulse value lower 16bit	16bit	[pulse]
000Bh		Feedback pulse value upper 16bit	16bit	[pulse]
000Ch				
000Dh				
000Eh	000Eh	Droop pulse value lower 16bit	16bit	[pulse]
000Fh		Droop pulse value upper 16bit	16bit	[pulse]
0010h	0010h			
0011h	0011h	Regenerative load factor	16bit	[%]
0012h	0012h	Effective load factor	16bit	[%]
0013h	0013h	Peak load factor	16bit	[%]
0014h		Instantaneously occurring torque	16bit	[%]
0015h	0015h	ABS counter	16bit	[rev]
0016h	0016h	Motor speed lower 16bit	16bit	×0.1[r/min]
0017h		Motor speed upper 16bit	16bit	×0.1[r/min]
0018h	0018h	Bus voltage	16bit	[V]
0019h	0019h	ABS position lower 16bit	16bit	[pulse]
001Ah		ABS position middle 16bit	16bit	[pulse]
001Bh	001Bh	ABS position upper 16bit	16bit	[pulse]
001Ch	001Ch	Within one-revolution position lower 16bit	16bit	[pulse]
001Dh		Within one-revolution position upper 16bit	16bit	[pulse]

3.5.4 Instruction codes (RWwn+2 ･ RWwn+3)

Refer to section 3.6.2 for the instruction code timing charts.

(1) Read instruction codes

The data read with the instruction code 0000h to 0AFFh is stored in Read code (RWrn+3).

Set the command code No. corresponding to the item to RWrn+2. The codes and answer data are all 4-digit hexadecimal numbers.

Setting any instruction code No. that is not given in this section will set the error code (□□1□) to respond code (RWrn+2). At this time, "0000" is set to Reading data (RWrn+3).

Code No.	Item/Function	Reading data (RWrn+3) contents (Servo amplifier → Programmable controller)
0000h	Operation mode Reads the current operation mode.	0000: CC-Link operation mode 0001: Test operation mode
0002h	Travel multiplying factor Reads the multiplying factor of the position data in the point table set in parameter No. PA05.	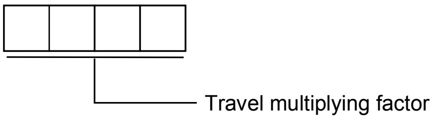 0300: ×1000 0200: ×100 0100: ×10 0000: ×1
0010h	Current alarm (warning) reading Reads the alarm No. or warning No. occurring currently.	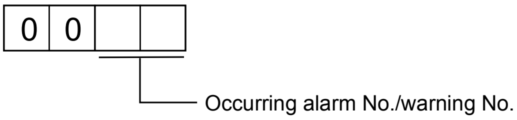
0020h	Alarm number in alarm history (most recent alarm)	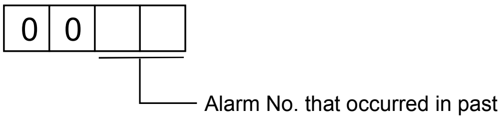
0021h	Alarm number in alarm history (first recent alarm)	
0022h	Alarm number in alarm history (second recent alarm)	
0023h	Alarm number in alarm history (third recent alarm)	
0024h	Alarm number in alarm history (fourth recent alarm)	
0025h	Alarm number in alarm history (fifth recent alarm)	
0030h	Alarm occurrence time in alarm history (most recent alarm)	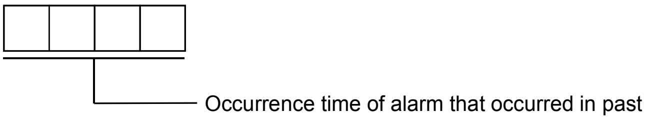
0031h	Alarm occurrence time in alarm history (first recent alarm)	
0032h	Alarm occurrence time in alarm history (second recent alarm)	
0033h	Alarm occurrence time in alarm history (third recent alarm)	
0034h	Alarm occurrence time in alarm history (fourth recent alarm)	
0035h	Alarm occurrence time in alarm history (fifth recent alarm)	

Code No.	Item/Function	Reading data (RWrn+3) contents (Servo amplifier → Programmable controller)
0040h	Input device status 0 Reads the statuses (OFF/ON) of the input devices.	Bit 0 to bit F indicate the OFF/ON statuses of the corresponding input devices. Refer to section 3.5.1 for the meanings of the abbreviations. bitF bit0 When 2 stations are occupied, DI0, DI1 and DI2 do not function and therefore they are always "0". bit0: SON bit4: LSP bit8: MOR bitC: DI2 bit1: ST1 bit5: LSN bit9: COR bitD: DI3 bit2: ST2 bit6: MDO bitA: DI0 bitE: DI4 bit3: DOG bit7: TSTP bitB: DI1 bitF: ―――
0041h	Input device status 1 Reads the statuses (OFF/ON) of the input devices.	Bit 0 to bit F indicate the OFF/ON statuses of the corresponding input devices. Refer to section 3.5.1 for the meanings of the abbreviations. bitF bit0 bit0: PSR bit4: DI6 bit8: CDP bitC: ――― bit1: SPR bit5: DI7 bit9: ――― bitD: ――― bit2: ――― bit6: TL1 bitA: CSL bitE: ――― bit3: DI5 bit7: PC bitB: INC bitF: ―――
0042h	Input device status 2 Reads the statuses (OFF/ON) of the input devices.	Bit 0 to bit F indicate the OFF/ON statuses of the corresponding input devices. Refer to section 3.5.1 for the meanings of the abbreviations. bitF bit0 bit0: ――― bit4: ――― bit8: ――― bitC: ――― bit1: ――― bit5: ――― bit9: ――― bitD: ――― bit2: ――― bit6: ――― bitA: RES bitE: ――― bit3: ――― bit7: ――― bitB: ――― bitF: ―――
0050h	Output device status 0 Reads the statuses (OFF/ON) of the Output devices.	Bit 0 to bit F indicate the OFF/ON statuses of the corresponding output devices. Refer to section 3.5.1 for the meanings of the abbreviations. bitF bit0 bit0: RD bit4: TLC bit8: MOF bitC: MEND bit1: INP bit5: ――― bit9: COF bitD: DB bit2: CPO bit6: MBR bitA: WNG bitE: POT bit3: ZP bit7: PUS bitB: BWNG bitF: ―――
0051h	Output device status 1 Reads the statuses (OFF/ON) of the Output devices.	Bit 0 to bit F indicate the OFF/ON statuses of the corresponding output devices. Refer to section 3.5.1 for the meanings of the abbreviations. bitF bit0 bit0: PSF bit4: PT2 bit8: PT6 bitC: ――― bit1: SPF bit5: PT3 bit9: PT7 bitD: ――― bit2: PT0 bit6: PT4 bitA: ――― bitE: ――― bit3: PT1 bit7: PT5 bitB: ――― bitF: ―――

Code No.	Item/Function	Reading data (RWrn+3) contents (Servo amplifier → Programmable controller)
0052h	Output device status 2 Reads the statuses (OFF/ON) of the Output devices.	Bit 0 to bit F indicate the OFF/ON statuses of the corresponding output devices. Refer to section 3.5.1 for the meanings of the abbreviations. 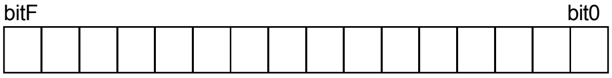 bit0: ――― bit4: ――― bit8: ――― bitC: ――― bit1: ――― bit5: ――― bit9: ――― bitD: ――― bit2: ――― bit6: ――― bitA: ALM bitE: ――― bit3: ――― bit7: ――― bitB: CRD bitF: ―――
0081h	Energization time Reads the energization time from shipment.	Returns the energization time [h]. 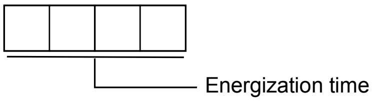
0082h	Power ON frequency Reads the number of power-on times from shipment.	Returns the number of power-on times. 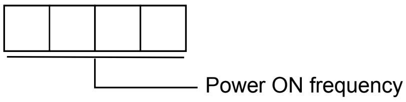
00A0h	Ratio of load inertia moment Reads the estimated ratio of load inertia moment to servo motor shaft inertia moment.	Return unit [times]. 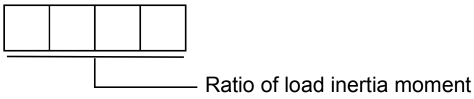
00B0h	Home position within-1-revolution position lower 16bit (CYC0) Reads the lower 16 bits of the cycle counter value of the absolute home position.	Return unit [pulses]. 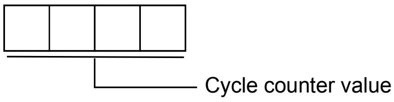
00B1h	Home position within-1-revolution position upper 16bit (CYC0) Reads the upper 16 bits of the cycle counter value of the absolute home position.	Return unit [pulses]. 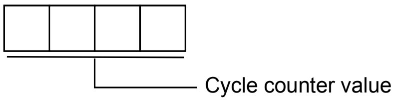
00B2h	Home position Multi-revolution data (ABS0) Multi-revolution counter value of absolute home position reading.	Return unit [rev]. 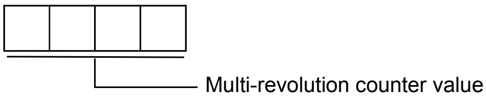
00C0h	Error parameter No./Point data No. reading Reads the parameter No./point table No. in error.	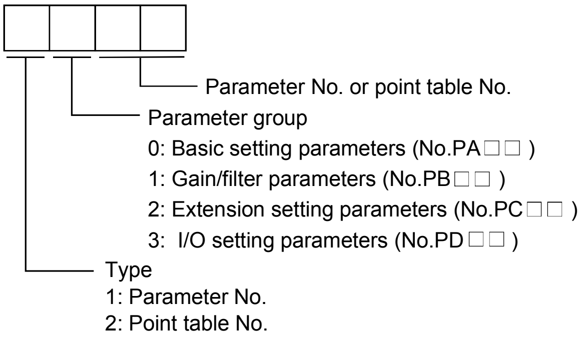

Code No.	Item/Function	Reading data (RWrn+3) contents (Servo amplifier → Programmable controller)
0100h to 011Dh	Monitor multiplying factor Reads the multiplying factor of the data to be read with the monitor code. The instruction codes 0100 to 011D correspond to the monitor codes 0000 to 001D. 0000 applies to the instruction code that does not correspond to the monitor code.	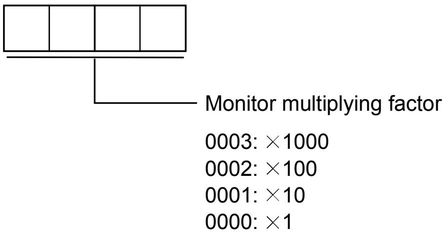 Monitor multiplying factor 0003: ×1000 0002: ×100 0001: ×10 0000: ×1
0200h	Parameter group reading Reads the parameter group to be read with code No.8200h to be written.	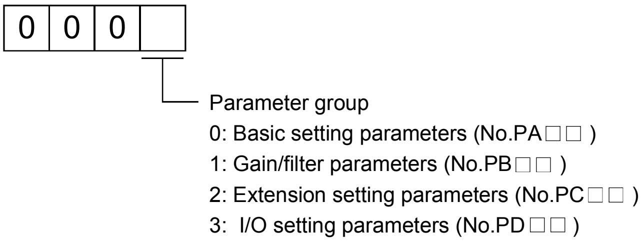 0 0 0 Parameter group 0: Basic setting parameters (No.PA□□) 1: Gain/filter parameters (No.PB□□) 2: Extension setting parameters (No.PC□□) 3: I/O setting parameters (No.PD□□)
0201h to 02FFh	Parameter data reading Reads the set value of each No. of the parameter group read with code No.0200h. The decimal value converted from the 2 lower digits of the code No. corresponds to the parameter No. .	The value set in the parameter No. corresponding to the requested group name is stored.
0301h to 03FFh	Data form of parameter Reads the data format of each No. of the parameter group read with code No.0200h. The decimal value converted from the 2 lower digits of the code No. corresponds to the parameter No. If the instruction code is set outside the range set in parameter No.PA19, an error code is returned and the data cannot be read.	The value set in the parameter No. corresponding to the requested group name is stored. 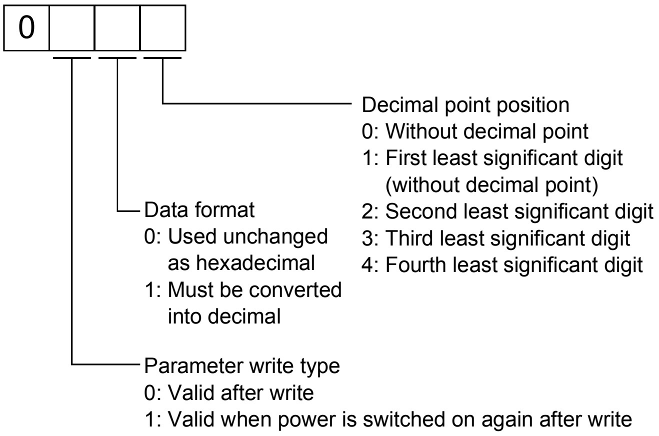 0 Decimal point position 0: Without decimal point 1: First least significant digit (without decimal point) 2: Second least significant digit 3: Third least significant digit 4: Fourth least significant digit Data format 0: Used unchanged as hexadecimal 1: Must be converted into decimal Parameter write type 0: Valid after write 1: Valid when power is switched on again after write
0401h to 04FFh 0501h to 05FFh	Position data of point table No.1 to 255 Reads the point table data of point table No.1 to 255. 0400 to 04FF: Position data in lower 16 bits of point table No.1 to 255 0500 to 05FF: Position data in upper 16 bits of point table No.1 to 255 Example Instruction code 0413: Lower 16 bits of point table No.19 Instruction code 0513: Upper 16 bits of point table No.19	The position data (upper 16 bits or lower 16 bits) set in the requested point table No. is returned.

Code No.	Item/Function	Reading data (RWrn+3) contents (Servo amplifier → Programmable controller)
0601h to 06FFh	Servo motor speed of point table No.1 to 255 The decimal value converted from the 2 lower digits of the code No. corresponds to the point table No.	The servo motor speed set to the requested point table No. is returned. 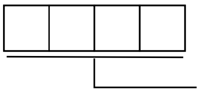
0701h to 07FFh	Acceleration time constant of point table No.1 to 255 The decimal value converted from the 2 lower digits of the code No. corresponds to the point table No.	The acceleration time constant set to the requested point table No. is returned.
0801h to 08FFh	Deceleration time constant of point table No.1 to 255 The decimal value converted from the 2 lower digits of the code No. corresponds to the point table No.	The deceleration time constant set to the requested point table No. is returned.
0901h to 09FFh	Dwell of point table No.1 to 255 The decimal value converted from the 2 lower digits of the code No. corresponds to the point table No.	The dwell set to the requested point table No. is returned.
0A01h to 0AFFh	Auxiliary function of point table No.1 to 255 The decimal value converted from the 2 lower digits of the code No. corresponds to the point table No.	The Auxiliary function set to the requested point table No. is returned.

(2) Write instruction codes

Set the data, which was requested to be written with the instruction code 8010h to 91FFh.

Set the instruction code No. corresponding to the item to Instruction code (RWwn+2) and the written data to Writing data (RWwn+3). The codes and answer data are all 4-digit hexadecimal numbers.

When the instruction code which has not been described in this section is set, the error code (□□1□) is stored in respond code (RWrn+2).

Code No.	Item	Writing data (RWwn+3) contents (Programmable controller → Servo amplifier)
8010h	Alarm reset command Deactivates the alarm that occurred.	1EA5
8101h	Feedback pulse value display data is clear Resets the display data of the status indication "feedback pulse value" to 0.	1EA5
8200h	Parameter group write command Writes the group of parameters that are written to with codes No.8201h to 82FFh and 8301h to 83FFh. Writes the group of parameters that are read with codes No.0201h to 02FFh and 0301h to 03FFh.	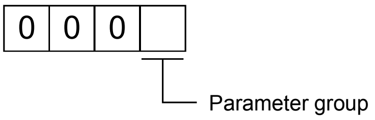 0: Basic setting parameters (No.PA□□) 1: Gain/filter parameters (No.PB□□) 2: Extension setting parameters (No.PC□□) 3: I/O setting parameters (No.PD□□)

Code No.	Item	Writing data (RWwn+3) contents (Programmable controller → Servo amplifier)
8201h to 82FFh	Data RAM instruction of parameter Writes the set value of each No. of the parameter group written by code No.8200h to RAM. These values are cleared when power is switched off. The decimal value converted from the 2 lower digits of the code No. corresponds to the parameter No. An error code is returned if an instruction code outside the range set in parameter No. PA19 or a value outside the setting range of the corresponding parameter is written.	Convert the decimal values into hexadecimal before setting.
8301h to 83FFh	Data EEP-ROM instruction of parameter Writes the set value of each No. of the parameter group written with code No.8200h to EEP-ROM. Written to EEP-ROM, these values are held if power is switched off. The decimal value converted from the 2 lower digits of the code No. corresponds to the parameter No. An error code is returned if an instruction code outside the range set in parameter No. PA19 or a value outside the setting range of the corresponding parameter is written.	Convert the decimal values into hexadecimal before setting.
8401h to 84FFh 8501h to 85FFh	Position data RAM command of point table Writes the position data of point table No. 1 to 255 to RAM. These values are cleared when power is switched off. **Point** ・A set of the upper and lower bits makes position data. When changing the data, always set the data of both lower and upper bits in order of lower 16-bit data and upper 16-bit data. 8400h to 84FFh: Position data in lower 16 bits of point table No.1 to 255 8500h to 85FFh: Position data in upper 16 bits of point table No.1 to 255 Example Instruction code 8413h: Lower 16 bits of point table No.19 Instruction code 8513h: Upper 16 bits of point table No.19	Convert the values into hexadecimal before setting.
8601h to 86FFh	Motor speed of point table Writes the motor speeds of point table No.1 to 255 to RAM. These values are cleared when power is switched off. The decimal value converted from the 2 lower digits of the code No. corresponds to the point table No.	Convert the values into hexadecimal before setting.
8701h to 87FFh	Acceleration time constant data RAM command of point table Writes the acceleration time constants of point table No.1 to 255 to RAM. These values are cleared when power is switched off. The decimal value converted from the 2 lower digits of the code No. corresponds to the point table No.	Convert the values into hexadecimal before setting.

Code No.	Item	Writing data (RWwn+3) contents (Programmable controller → Servo amplifier)
8801h to 88FFh	Deceleration time constant data RAM command of point table Writes the deceleration time constants of point table No.1 to 255 to RAM. These values are cleared when power is switched off. The decimal value converted from the 2 lower digits of the code No. corresponds to the point table No.	Convert the values into hexadecimal before setting.
8901h to 89FFh	Dwell data RAM command of point table Writes the dwell data of point table No.0 to 255 to RAM. These values are cleared when power is switched off. The decimal value converted from the 2 lower digits of the code No. corresponds to the point table No.	Convert the values into hexadecimal before setting.
8A01h to 8AFFh	Auxiliary function data RAM command of point table Writes the auxiliary function data of point table No.0 to 31 to RAM. These values are cleared when power is switched off. The decimal value converted from the 2 lower digits of the code No. corresponds to the point table No.	Convert the values into hexadecimal before setting.
8B01h to 8BFFh 8C01h to 8CFFh	Position data EEP-ROM command of point table Writes the position data of point table No.1 to 255 to EEP-ROM. Written to EEP-ROM, these values are held if power is switched off. Point ・A set of the upper and lower bits makes position data. When changing the data, always set the data of both lower and upper bits in order of lower 16-bit data and upper 16-bit data. 8B01h to 8BFFh: Position data in lower 16 bits of point table No.1 to 255 8C01h to 8CFFh: Position data in upper 16 bits of point table No.1 to 255 Example Instruction code 8B13h: Lower 16 bits of point table No.19 Instruction code 8C13h: Upper 16 bits of point table No.19	Convert the values into hexadecimal before setting.
8D01h to 8DFFh	Servo motor speed data EEP-ROM command of point table Writes the servo motor speeds of point table No.1 to 255 to EEP-ROM. Written to EEP-ROM, these values are held if power is switched off. The decimal value converted from the 2 lower digits of the code No. corresponds to the point table No.	Convert the values into hexadecimal before setting.

Code No.	Item	Writing data (RWwn+3) contents (Programmable controller → Servo amplifier)
8E01h to 8EFFh	Acceleration time constant data EEP-ROM command of point table Writes the acceleration time constants of point table No.1 to 255 to EEP-ROM. Written to EEP-ROM, these values are held if power is switched off. The decimal value converted from the 2 lower digits of the code No. corresponds to the point table No.	Convert the values into hexadecimal before setting.
8F01h to 8FFFh	Deceleration time constant data EEP-ROM command of point table Writes the deceleration time constants of point table No.1 to 255 to EEP-ROM. Written to EEP-ROM, these values are held if power is switched off. The decimal value converted from the 2 lower digits of the code No. corresponds to the point table No.	Convert the values into hexadecimal before setting.
9001h to 90FFh	Dwell data EEP-ROM command of point table Writes the dwell data of point table No.1 to 255 to EEP-ROM. Written to EEP-ROM, these values are held if power is switched off. The decimal value converted from the 2 lower digits of the code No. corresponds to the point table No.	Convert the values into hexadecimal before setting.
9101h to 91FFh	Auxiliary function data EEP-ROM command of point table Writes the auxiliary function data of point table No.1 to 255 to EEP-ROM. Written to EEP-ROM, these values are held if power is switched off. The decimal value converted from the 2 lower digits of the code No. corresponds to the point table No.	Convert the values into hexadecimal before setting.

3.5.5 Respond codes (RWrn+2)

If any of the monitor codes, instruction codes, position command data/point table Nos., point table Nos./speed command data set to the remote register is outside the setting range, the corresponding error code is set to respond code (RWrn＋2). "0000" is set if they are normal.

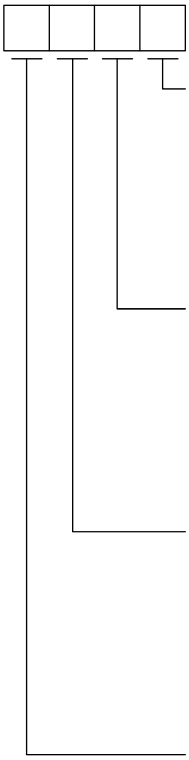

Error related to monitor code 1/monitor code 2

Code No.	Error detail	Details
0	Normal answer	Successfully executed.
1	Code error	An incorrect code No. is specified.
2		
3		

Error related to instruction code/writing code

Code No.	Error detail	Details
0	Normal answer	Successfully executed.
1	Code error	An incorrect code No. is specified.
2	Parameter selection error	Unavailable parameter No. is specified.
3	Out of writing data range	A value out of the setting range is set.

Error related to position command data/point table No.

Code No.	Error detail	Details
0	Normal answer	Successfully executed.
1		
2		
3	Out of writing data range	A value out of the setting range is set.

Error related to point table No./speed command data

Code No.	Error detail	Details
0	Normal answer	Successfully executed.
1		
2		
3	Out of writing data range	A value out of the setting range is set.

3.5.6 Setting the CN6 external input signals

Using parameter No.PD06 to PD08, PD12 and PD14, you can assign the input devices as the CN6 external input signals. The signals assigned as the CN6 external input devices cannot be used in CC-Link. Refer to section 4.5.1 for the pins to which signals can be assigned.

In the initial status, the forward rotation stroke end, reverse rotation stroke end and proximity dog are preset to be usable as the CN6 external input signals.

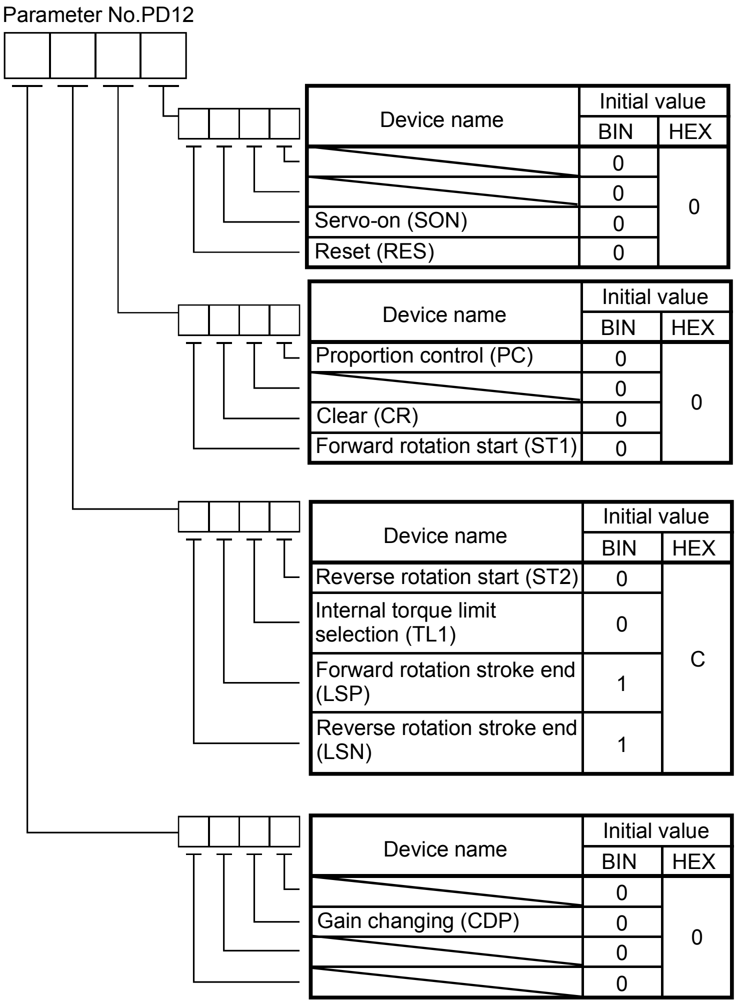

Device name	Initial value	
	BIN	HEX
	0	0
	0	
Servo-on (SON)	0	
Reset (RES)	0	

Device name	Initial value	
	BIN	HEX
Proportion control (PC)	0	0
	0	
Clear (CR)	0	
Forward rotation start (ST1)	0	

Device name	Initial value	
	BIN	HEX
Reverse rotation start (ST2)	0	C
Internal torque limit selection (TL1)	0	
Forward rotation stroke end (LSP)	1	
Reverse rotation stroke end (LSN)	1	

Device name	Initial value	
	BIN	HEX
	0	0
Gain changing (CDP)	0	
	0	
	0	

BIN 0: Used in CC-Link
BIN 1: Used as CN6 external input signal

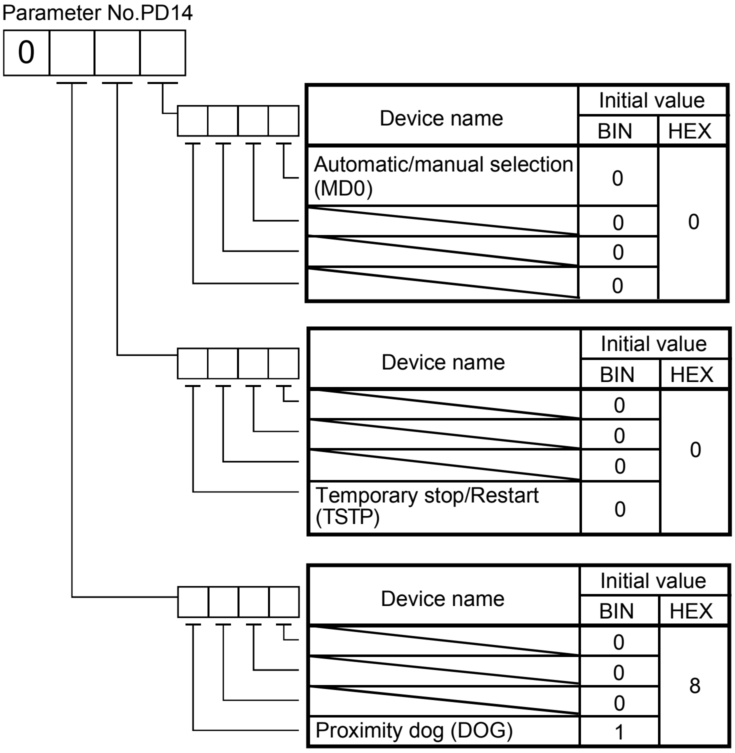

Device name	Initial value	
	BIN	HEX
Automatic/manual selection (MD0)	0	0
	0	
	0	
	0	

Device name	Initial value	
	BIN	HEX
	0	0
	0	
	0	
Temporary stop/Restart (TSTP)	0	

Device name	Initial value	
	BIN	HEX
	0	8
	0	
	0	
Proximity dog (DOG)	1	

BIN 0: Used in CC-Link
BIN 1: Used as CN6 external input signal

3.6 Data communication timing charts

3.6.1 Monitor codes

(1) When 1 station is occupied

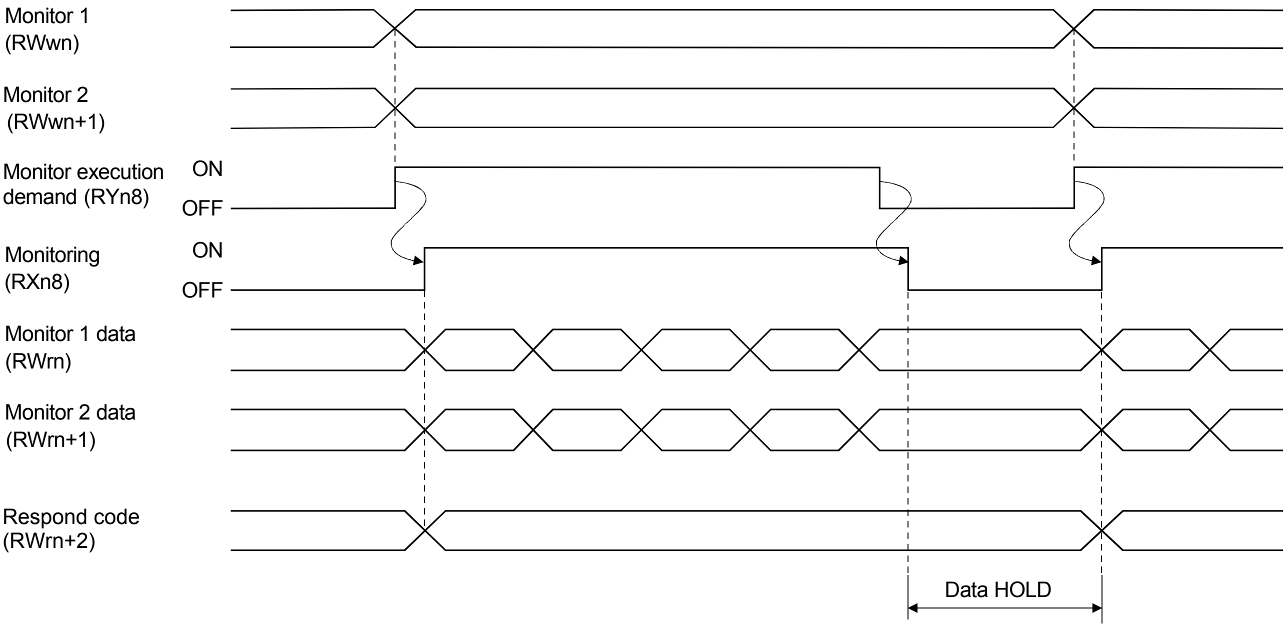

Set the monitor codes (refer to section 3.5.3) to Monitor 1 (RWwn) and Monitor 2 (RWwn+1) and turn Monitor output execution demand (RYn8) to ON. Turning Monitor execution demand (RYn8) to ON sets the next data. Data are all hexadecimal numbers. At this time, Monitoring (RXn8) turns to ON at the same time.

Monitor data 1 (RWrn): Data demanded by Monitor 1 (RWwn)
Monitor data 2 (RWrn+1): Data demanded by Monitor 2 (RWwn+1)

For 32-bit data, set the lower 16 bits of the monitor code to Monitor 1 (RWwn) and the upper 16 bits to Monitor 2 (RWwn+1) and read them simultaneously.
The monitor data set to the remote register are always updated while Monitor execution demand (RYn8) is ON. When Monitoring (RXn8) turns to OFF, the data set to Monitor data RWrn, RWrn+1 are held. If the monitor code not in the specifications is set to either Monitor 1 (RWwn) or Monitor 2 (RWwn+1), the corresponding error code (□□□1) is set to respond code.

(2) When 2 stations are occupied

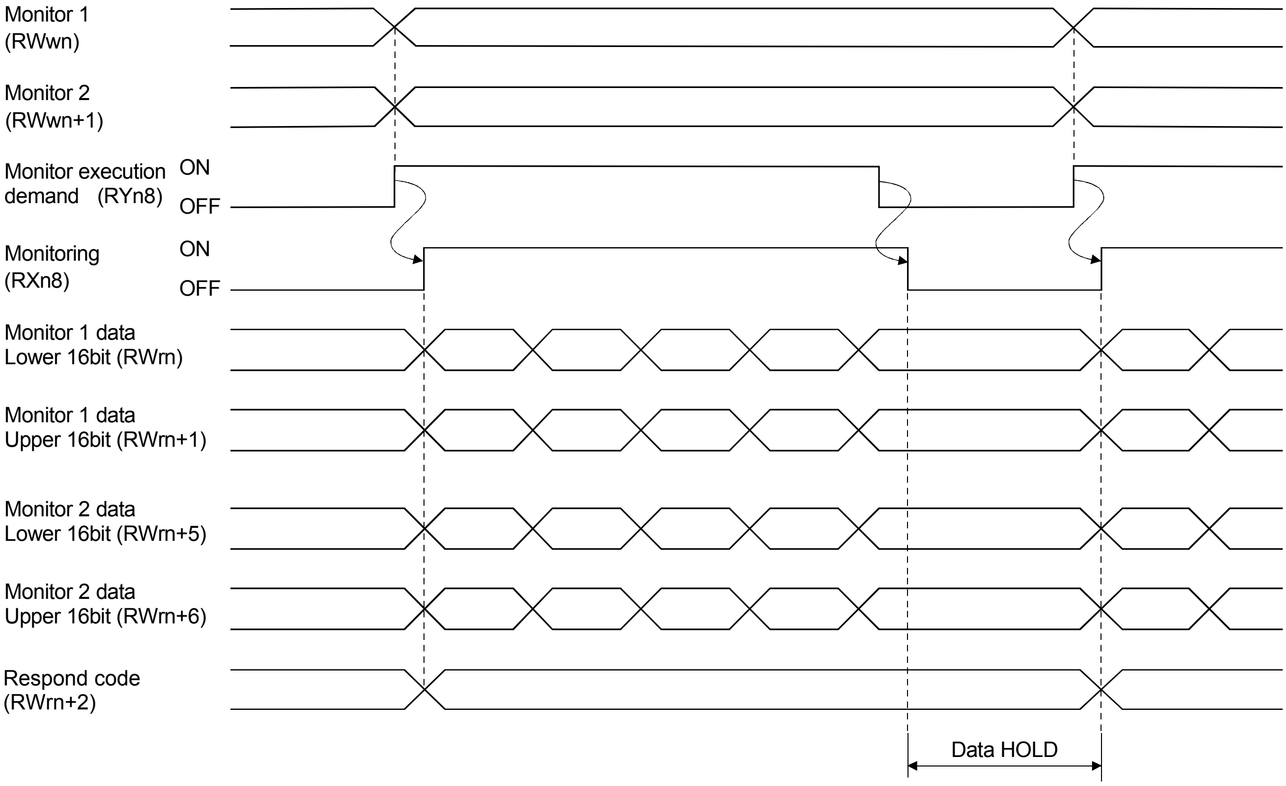

Set the monitor codes (refer to section 3.5.3) to Monitor 1 (RWwn) and Monitor 2 (RWwn+1) and turn Monitor output execution demand (RYn8) to ON. Turning Monitor execution demand (RYn8) to ON sets the next data. 32-bit data are all divided into the upper 16 bits and lower 16 bits, and set to the remote register. Data are all hexadecimal numbers. At this time, Monitoring (RXn8) turns to ON at the same time.

Monitor data 1 lower 16 bit (RWrn): Lower 16 bits of data demanded by Monitor 1 (RWwn)
Monitor data 1 upper 16 bit (RWrn+1): Upper 16 bits of data demanded by Monitor 1 (RWwn)
Monitor data 2 lower 16 bit (RWrn+5): Lower 16 bits of data demanded by Monitor 2 (RWwn+1)
Monitor data 2 upper 16 bit (RWrn+6): Upper 16 bits of data demanded by Monitor 2 (RWwn+1)

A sign is set if data does not exist in RWrn+1 ▪ RWrn+6. A "+" sign is indicated by "0000", and "—" by "FFFF".
The monitor data set to the remote register are always updated while Monitoring (RXn8) is ON.
When Monitoring (RXn8) turns to OFF, the data set to Monitor data RWrn, RWrn+1, RWrn+5, RWrn+6 are held.
If the monitor code not in the specifications is set to either Monitor 1 (RWwn) or Monitor 2 (RWwn+1), the corresponding error code (□□□1) is set to respond code.

3.6.2 Instruction codes

(1) Read instruction codes (0000h to 0A1Fh)

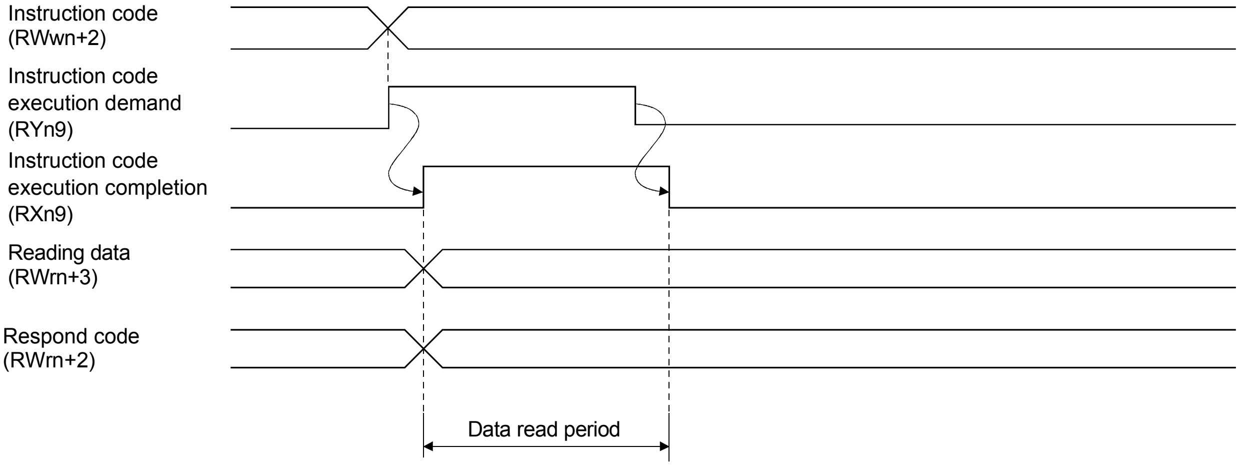

Set the read instruction code (refer to section 3.5.4 (1)) to Instruction code (RWwn+2) and turn Instruction code execution demand (RYn9) to ON. Turning Instruction code execution demand (RYn9) to ON sets the data corresponding to the preset read code to Reading data (RWrn+3). Data are all hexadecimal numbers. At this time, Instruction code execution completion (RXn9) turns to ON at the same time.

Read the read data set to Reading data (RWrn+3) while Instruction code execution completion (RXn9) is ON. The data set to Reading data (RWrn+3) is held until the next read instruction code is set and Instruction code execution demand (RYn9) is turned to ON.

If the instruction code not in the specifications is set to Instruction code (RWwn+2), the corresponding error code (□□1□) is set to respond code. If any unusable parameter, point table is read, the corresponding error code (□□2□) is set.

Turn Instruction code execution demand (RYn9) to OFF after completion of data read.

(2) Write instruction codes (8000h to 911Fh)

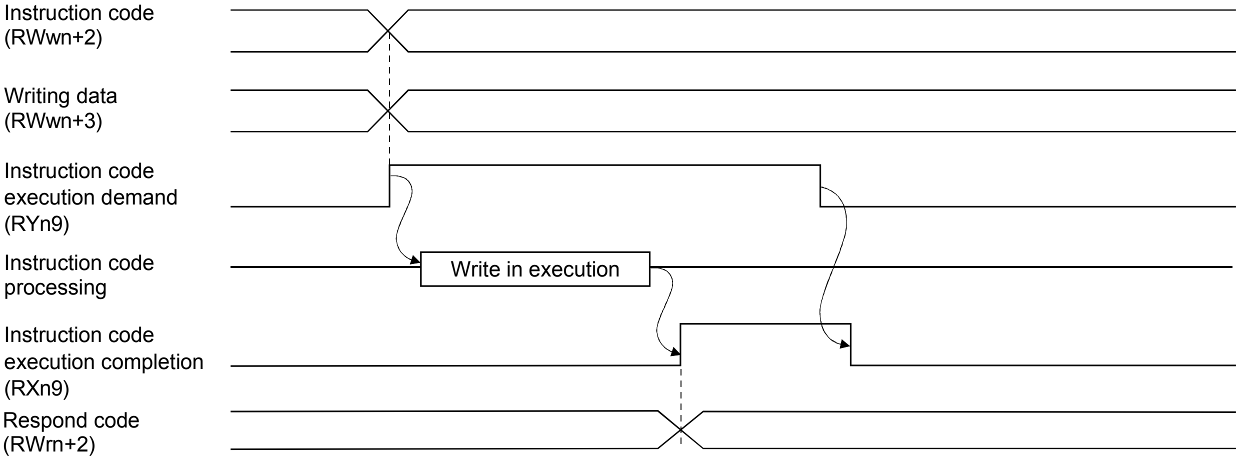

Set the write instruction code (refer to section 3.5.4 (2)) to Instruction code (RWwn+2) and the data to be written (data to be executed) to Writing data (RWwn+3) in hexadecimal, and turn Instruction code execution demand (RYn9) to ON.

Turning instruction code execution completion to ON sets the data set in Wiring data (RWwn+3) to the item corresponding to the write instruction code. When write is executed, Instruction code execution completion (RXn9) turns to ON.

If the instruction code not in the specifications is set to Instruction code (RWwn+2), the corresponding error code (□□1□) is set to respond code.

Turn Instruction code execution demand (RYn9) to OFF after Instruction code execution completion (RXn9) has turned to ON.

3.6.3 Remote register-based position/speed setting

The functions in this section are usable when Position/speed specifying system selection (RY(n+2)A) is ON (remote register-based position/speed specifying system is selected) with 2 stations occupied.
The position command/Speed command necessary for positioning can be selected by parameter No.PC30 setting as indicated below.

Parameter No.PC30

Set value	Position command	Speed command
0	Specify the point table No.	
1	Set the position data.	Specify the point table No.
2		Set the servo motor speed.

(1) When setting the point table No.
Specify the point table No. stored in the servo amplifier and execute positioning.
Preset "□□□0" (initial value) in parameter No.PC30 to enable point table No.-setting operation.

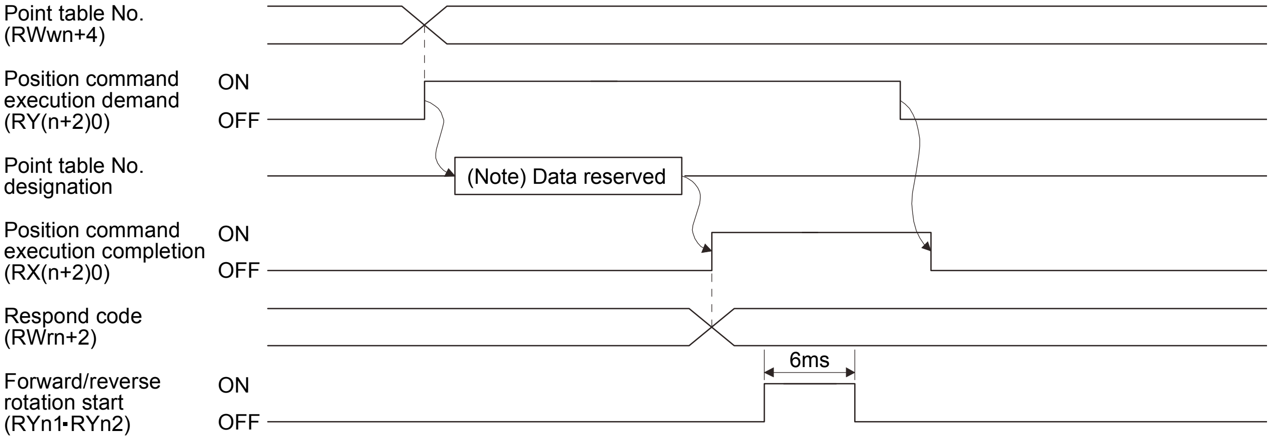

Note. This data is stored into RAM of the servo amplifier. Hence, the data is cleared when power is switched off.

Set the point table No. to point table No. (RWwn+4) and turn Position command execution demand (RY(n+2)0) to ON.
Turning RY(n+2)0 to ON stores the position block No. into RAM of the servo amplifier.
When the data is stored, Position command execution completion (RX(n+2)0) turns to ON.
If data outside the setting range is set to Position block No. (RWwn+4), the error code (refer to section 3.5.5) is set to respond code.
Turn Forward rotation start (RYn1)/Reverse rotation start (RYn2) to ON after Position command execution completion (RX(n+2)0) has turned to ON.

(2) When setting the position command data/point table No. (Speed command)

Specify the position address with the remote register, and specify the Speed command data by specifying the point table No. to use the preset servo motor speed, acceleration time constant and deceleration time constant the Speed command data, and execute positioning.

Preset "□□□1" in parameter No.PC30 to enable position command data-set and point table No. (Speed command)-setting operation.

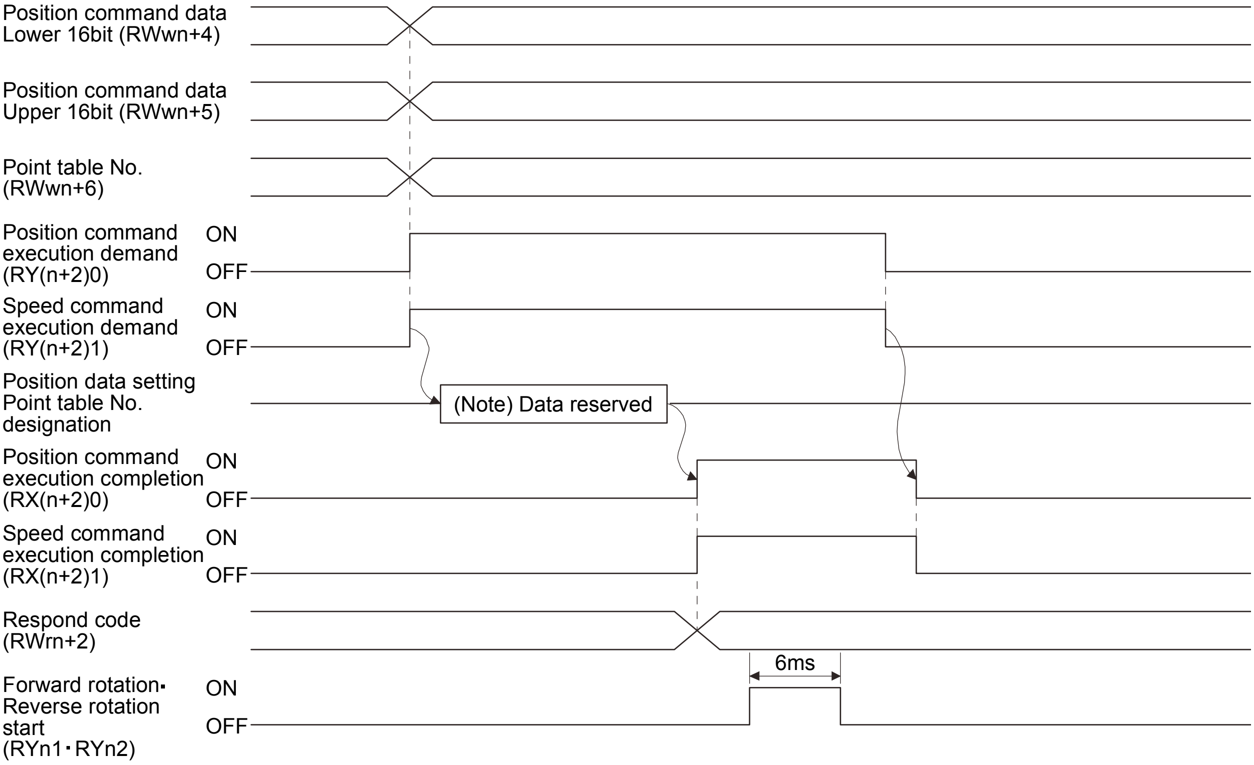

Note. This data is stored into RAM of the servo amplifier. Hence, the data is cleared when power is switched off.

Set the lower 16 bits of the Position command data to Position command data lower 16 bit (RWwn+4), the upper 16 bits of the Position command data to Position command data upper 16 bit (RWwn+5), and point table for Speed command No. to point table No. (RWwn+6), and turn Position command execution demand (RY(n+2)0) and Speed command execution demand (RY(n+2)1) to ON.

Turning RY(n+2)0 and RY(n+2)1 to ON stores the position command data and point table No. into RAM of the servo amplifier.

When the data are stored, Position command execution completion (RX(n+2)0) and Speed command execution completion (RX(n+2)1) turn to ON.

If data outside the setting range is set to any of Position command data lower 16 bit (RWwn+4), Position command data upper 16 bit (RWwn+5) and Speed command data (RWwn+6), the error code (refer to section 3.5.5) is set to respond code.

Turn Forward rotation start (RYn1) ・ Reverse rotation start (RYn2) to ON after Position command execution completion (RX(n+2)0) and Speed command execution completion (RX(n+2)1) have turned to ON.

(3) When setting the position command data and Speed command data

Specify the position address and servo motor speed with the remote register, and execute positioning. At this time, use the acceleration time constant and deceleration time constant set in point table No.1.

Preset "□□□2" in parameter No.PC30 to enable position command data- and Speed command data-set operation.

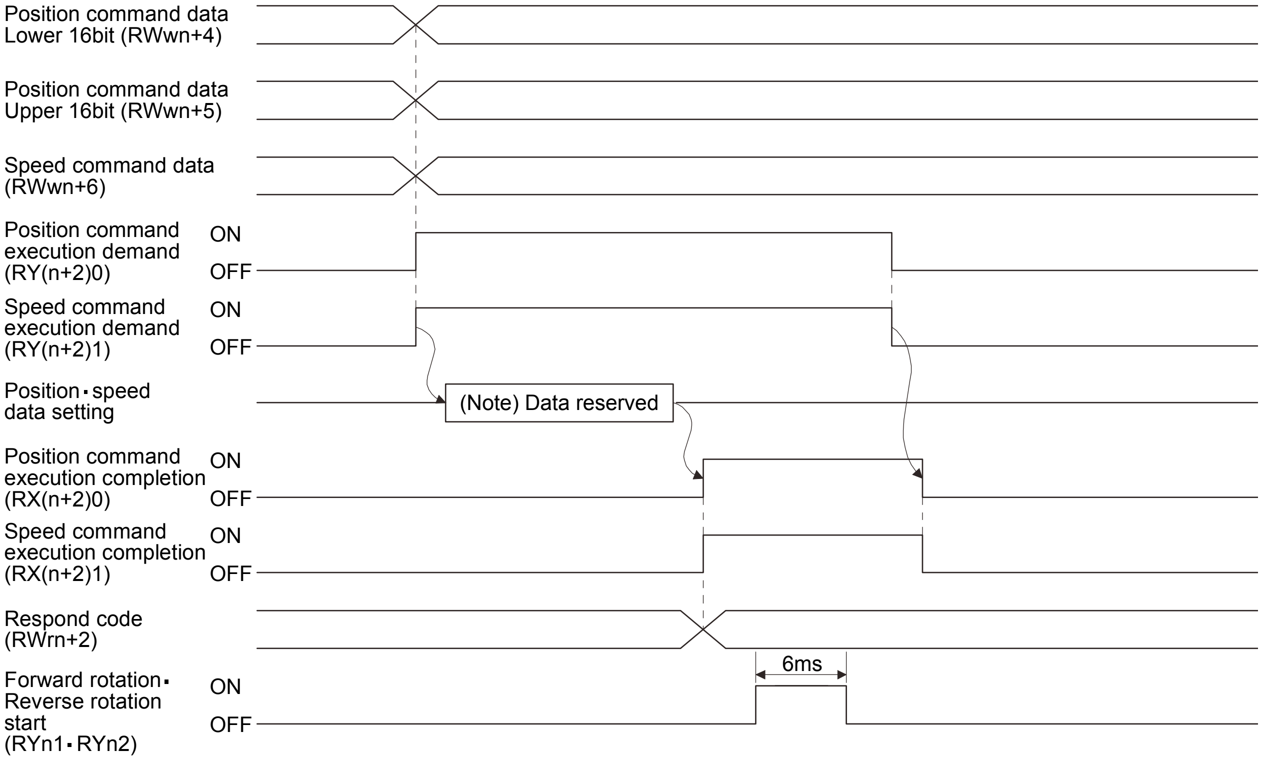

Note. This data is stored into RAM of the servo amplifier. Hence, the data is cleared when power is switched off.

Set the lower 16 bits of the Position command data to Position command data lower 16 bit (RWwn+4), the upper 16 bits of the Position command data to Position command data upper 16 bit (RWwn+5), and Speed command data to Speed command data (RWwn+6), and turn Position command execution demand (RY(n+2)0) and Speed command execution demand (RY(n+2)1) to ON.

Turning RY(n+2)0 and RY(n+2)1 to ON stores the position command data and Speed command data into RAM of the servo amplifier.

When the data are stored, Position command execution completion (RX(n+2)0) and Speed command execution completion (RX(n+2)1) turn to ON.

If data outside the setting range is set to any of Position command data lower 16 bit (RWwn+4), Position command data upper 16 bit (RWwn+5) and Speed command data (RWwn+6), the error code (refer to section 3.5.5) is set to respond code.

Turn Forward rotation start (RYn1) ・ Reverse rotation start (RYn2) to ON after Position command execution completion (RX(n+2)0) and Speed command execution completion (RX(n+2)1) have turned to ON.

3.7 Function-by-function programming examples

This section explains specific programming examples for servo operation, monitor, parameter read and write, and others on the basis of the equipment makeup shown in section 3.7.1.

3.7.1 System configuration example

As shown below, the CC-Link system master・local unit is loaded to run two servo amplifiers (1 station occupied / 2 stations occupied).

(1) System configuration

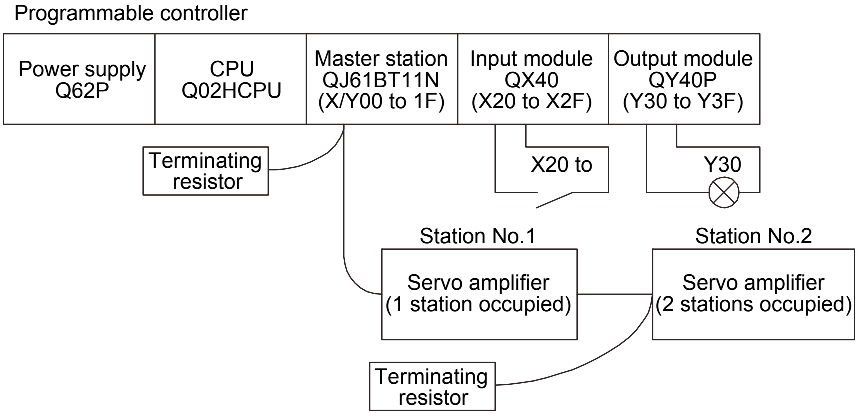

(2) Master station network parameter setting

In the programming examples, network parameters are set as below.

Item		Setting condition
Start I/O No.		0000
Operational setting	Data link disorder station settings	Clear (No check on "Hold input data")
	Case of CPU STOP setting	Refresh
Type		Master station
Mode		Remote net (Ver.1 mode)
All connect count		2
Remote input (RX) Refresh device		X1000
Remote output (RY) Refresh device		Y1000

Item	Setting condition
Remote register (RWr) Refresh device	W0
Remote register (RWw) Refresh device	W100
Special relay (SB) Refresh device	SB0
Special relay (SW) Refresh device	SW0
Retry count	3
Automatic reconnection station count	1
CPU down select	Stop
Scan mode setting	Asynchronous

(3) Relationship of remote I/O (RX, RY)

The following shows a relationship between the devices of the programmable controller CPU and the remote I/Os (RX, RY) of the remote device stations.

Shaded area shows the devices actually used.

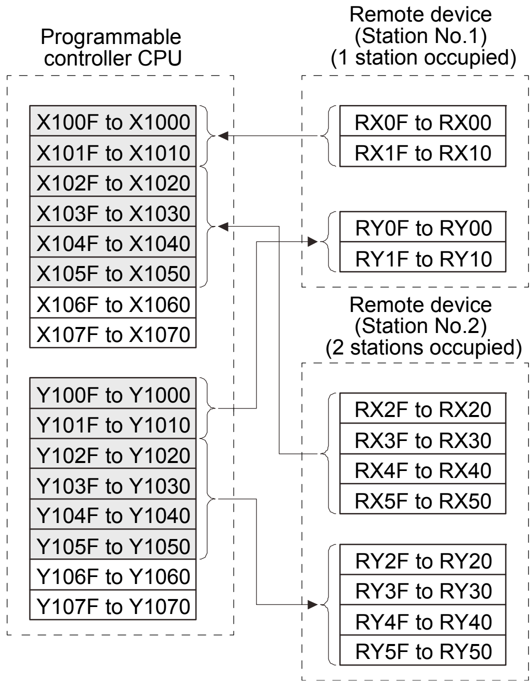

(4) Relationship of remote register (RWw, RWr)

The following shows a relationship between the devices of the programmable controller CPU and the remote registers (RWw, RWr) of the remote device stations.

Shaded area shows the devices actually used.

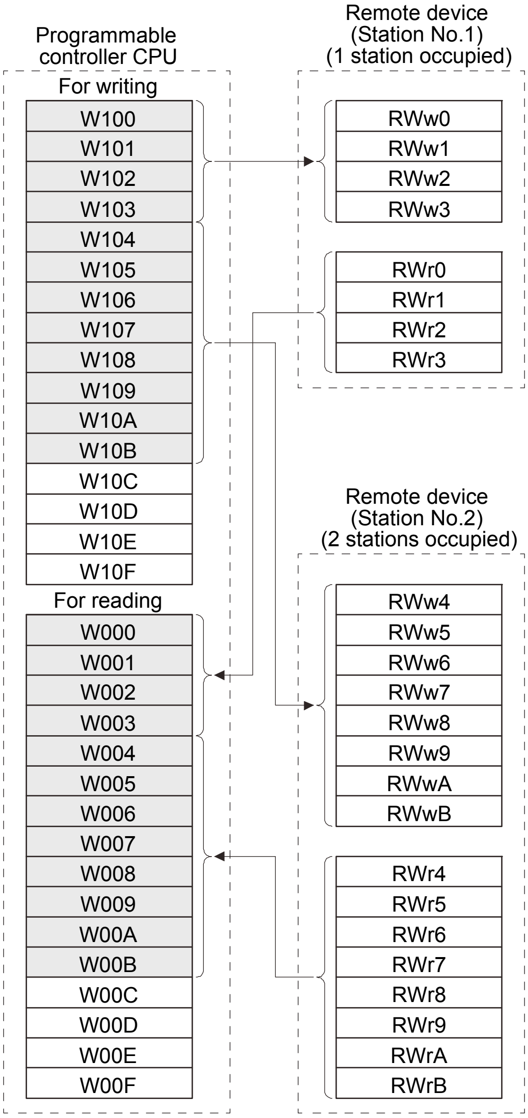

3.7.2 Reading the servo amplifier status

When the servo amplifier on station number 1 becomes ready for the remote station communication, Y30 of the output module turns on.

The program is for turning on Y30 when CC-Link communication is normal.

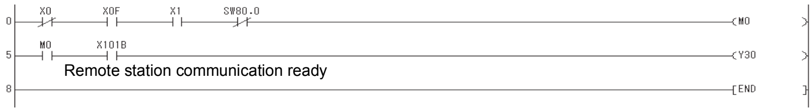

Checks data link status of station No.1.

Turns on output module (Y30).

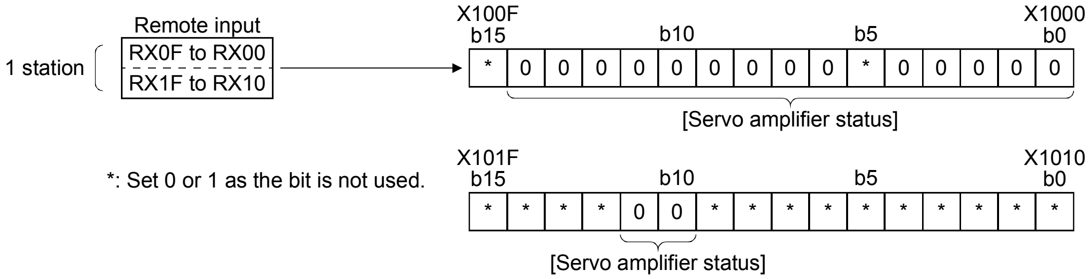

*: Set 0 or 1 as the bit is not used.

Servo amplifier status (1 station occupied)

X1000: Ready (RD)
X1001: In position (INP)
X1002: Rough match (CPO)
X1003: Home position return completion (ZP)
X1004: Limiting torque (TLC)
X1005: ―――
X1006: Electromagnetic brake interlock (MBR)
X1007: Temporary stop (PUS)

X1008: Monitoring (MOF)
X1009: Instruction code execution completion (COF)
X100A: Warning (WNG)
X100B: Battery warning (BWNG)
X100C: Movement completion (MEND)
X100D: Dynamic brake interlock (DB)
X100E: Position range (POT)
X100F: ―――

X1010: ―――
X1011: ―――
X1012: ―――
X1013: ―――
X1014: ―――
X1015: ―――
X1016: ―――
X1017: ―――

X1018: ―――
X1019: ―――
X101A: Trouble (ALM)
X101B: Remote station communication ready (CRD)
X101C: ―――
X101D: ―――
X101E: ―――
X101F: ―――

3.7.3 Writing the operation commands

Perform positioning operation of point table No.2 for the servo amplifier of station 2.
Start the operation by turning on X20.

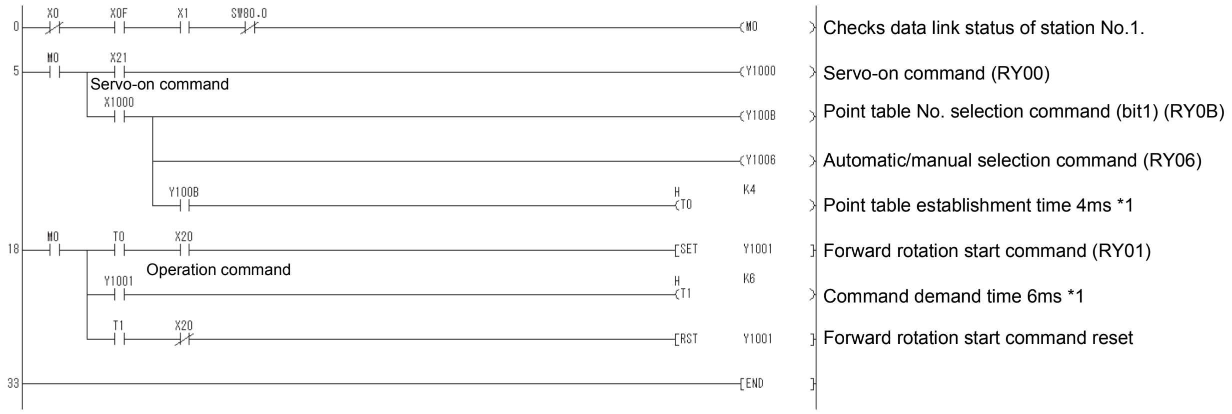

*1: This is when the high-speed timer limit is set to 1ms.
Setting time for the timer should be larger than the command processing time or twice the link scan time whichever larger. When the setting time is short, the command cannot be received properly.

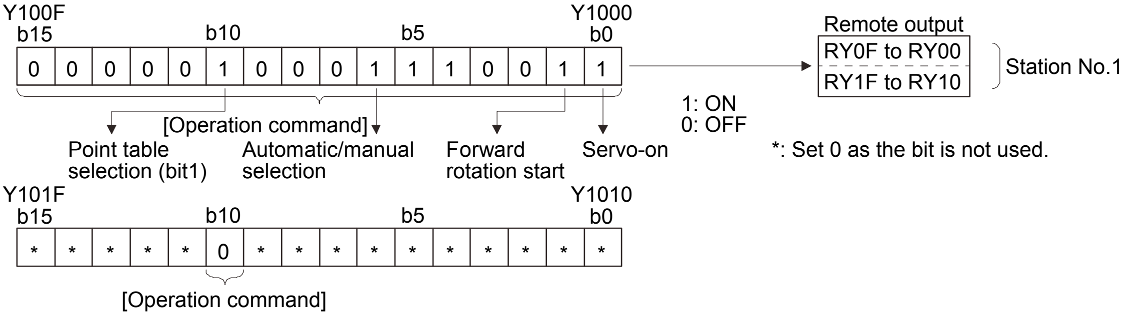

Operation commands
(1 station occupied)
Y1000: Servo-on (SON)
Y1001: Forward rotation start (ST1)
Y1002: Reverse rotation start (ST2)
Y1003: Proximity dog (DOG)
Y1004: Forward rotation stroke end (LSP)
Y1005: Reverse rotation stroke end (LSN)
Y1006: Automatic/manual selection (MDO)
Y1007: Temporary stop/Restart (TSTP)
Y1008: Monitor output execution demand (MOR)
Y1009: Instruction code execution demand (COR)
Y100A: Point table No. selection 1 (DI0)
Y100B: Point table No. selection 2 (DI1)
Y100C: Point table No. selection 3 (DI2)
Y100D: Point table No. selection 4 (DI3)
Y100E: Point table No. selection 5 (DI4)
Y100F: Clear (CR)
Y1010: ―――
Y1011: ―――
Y1012: ―――
Y1013: ―――
Y1014: ―――
Y1015: ―――
Y1016: ―――
Y1017: ―――
Y1018: ―――
Y1019: ―――
Y101A: Reset (RES)
Y101B: ―――
Y101C: ―――
Y101D: ―――
Y101E: ―――
Y101F: ―――

3.7.4 Reading the data

Read various data of the servo amplifier.

(1) Reading the monitor value

Read the (feedback pulse value) of the servo amplifier of station 2 to D1.

Data No.	Description
H000A	Cumulative feedback pulse data (hexadecimal)

Read the cumulative feedback pulse monitor by turning on X20.

Checks data link status of station No.2.

Sets monitor code (H000A) of feedback pulse in RWw4.

Turns on Monitor output execution demand (RY28).

Reads feedback pulse (RWr4, RWr5) to D10 and D11 when monitoring (RX28) turns on.

(2) Reading the parameter

Read parameter No.PA04 "Function selection A-1" of the servo amplifier of station 2 to D1.

Data No.	Description
H8200	Parameter group selection
H2024	Parameter No.PA04 setting (hexadecimal)

Read the parameter No.PA04 by turning on X20.

The respond code at instruction code execution is set to D2.

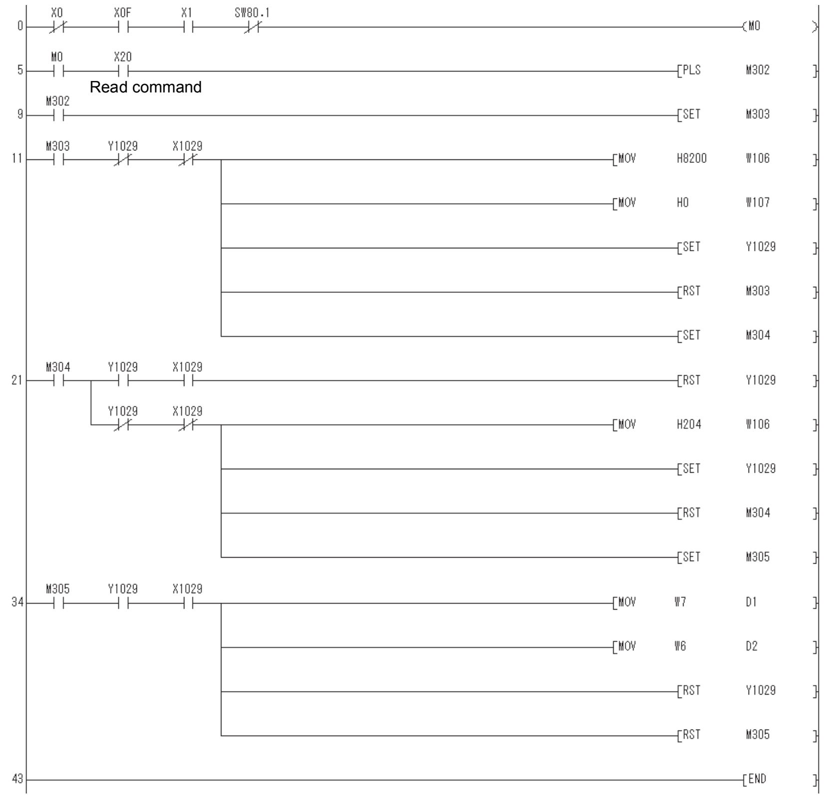

Checks data link status of station No.2.

Writes parameter group No. write (H8200) to RWw6 and parameter group PA (H0000) to RWw7.

Turns on instruction code execution demand (RY29).

Turns off instruction code execution demand (RY29) when instruction code execution completion (RX29) turns on.

Writes parameter No.PA04 read (H0204) to RWw6.

Turns on instruction code execution demand (RY29).

Reads function selection A-1 (RWr7) and respond code (RWr6) to D1 and D2 when instruction code execution demand (RX29) turns on.

Turns off instruction code execution demand (RY29).

(3) Reading the alarm definition

Read the alarm definition of the servo amplifier of station 2 to D1.

Data No.	Description
H0010	Occurring alarm/warning No. (hexadecimal)

Read current alarms by turning on X20.

The respond code at instruction code execution is set to D2.

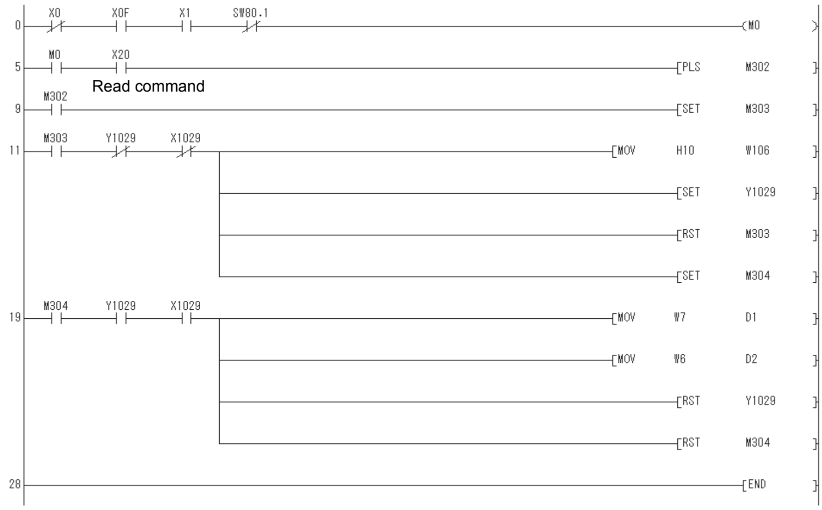

Checks data link status of station No.2.

Writes current alarm read (H0010) to RWw6.

Turns on instruction code execution demand (RY29).

Reads current alarm (RWr7) and respond code (RWr6) to D1 and D2 when instruction code execution demand (RX29) turns on.

Turns off instruction code execution demand (RY29).

3.7.5 Writing the data

This section explains the programs for writing various data to the servo amplifier.

(1) Writing the servo motor speed data of point table

Change the servo motor speed data in the point table No.1 of the servo amplifier of station 2 to "100".

The following shows a program example for writing data to the servo amplifier when two stations are occupied. Writing in this procedure is disabled for the servo amplifier when one station is occupied.

Code No.	Description
H8D01	Write of servo motor speed data of point table No.1 (hexadecimal)

Set data	Description
K100	Servo motor speed data of point table No.1 (decimal)

Write the data to the servo motor speed data of point table No.1 by turning on X20.

The respond code at instruction code execution is set to D2.

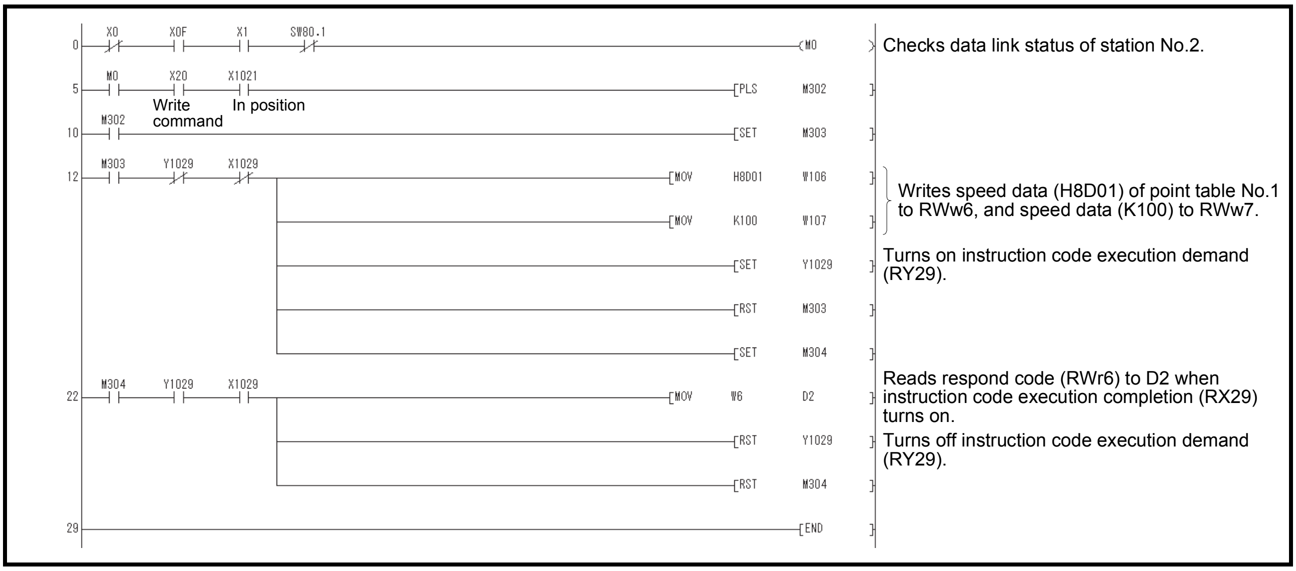

Checks data link status of station No.2.

Writes speed data (H8D01) of point table No.1 to RWw6, and speed data (K100) to RWw7.

Turns on instruction code execution demand (RY29).

Reads respond code (RWr6) to D2 when instruction code execution completion (RX29) turns on.

Turns off instruction code execution demand (RY29).

(2) Writing the parameter

The following shows a program example when two stations are occupied.

Change parameter No.PC12 (JOG speed) of the servo amplifier of station 2 to "100".

The parameter group PC is specified as follows.

Code No.	Description
8200h	Parameter group selection

Set data	Description
H0002	Set data (hexadecimal)

The parameter No.12 is changed to "100" as follows.

Code No.	Description
H820C	Parameter No.PC12 write (hexadecimal)

Set data	Description
K100	Set data (decimal)

Write the data to the parameter No.PC12 by turning on X20.

The respond code at instruction code execution is set to D2.

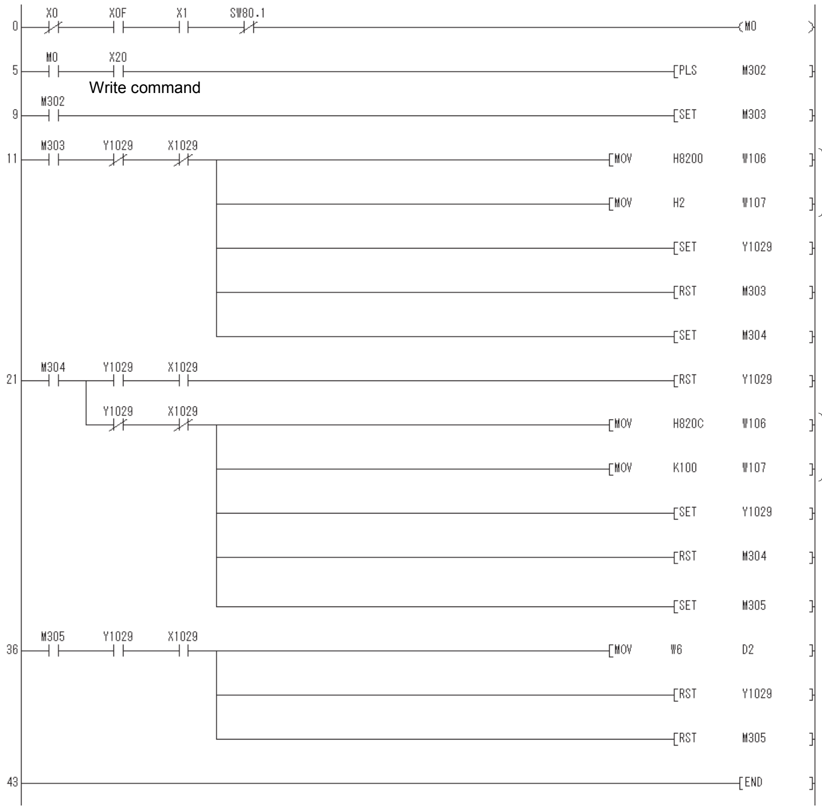

Checks data link status of station No.2.

Writes parameter group No. write (H8200) to RWw6 and parameter group PC (H0002) to RWw7.

Turns on instruction code execution demand (RY29).

Turns off instruction code execution demand (RY29) when instruction code execution completion (RX29) turns on.

Writes parameter No.PC12 write (H820C) to RWw6 and data (K100) to RWw7.

Turns on instruction code execution demand (RY29).

Reads RWw6 to D2 when instruction code execution completion (RX29) turns on.

Turns off instruction code execution demand (RY29).

(3) Servo amplifier alarm resetting program examples

(a) Deactivate the alarm of the servo amplifier of station 2 by issuing a command from the programmable controller.

Reset the servo amplifier on the occurrence of a servo alarm by turning on X20.

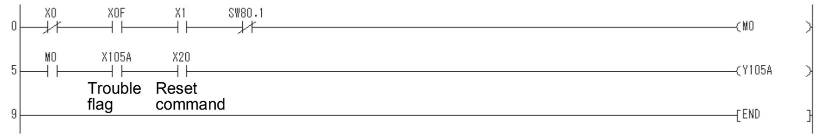

Checks data link status of station No.2.

Turns on reset command (RY5A).
Turns off reset command (RY5A) when trouble flag (RX5A) turns off.

(b) Deactivate the alarm of the servo amplifier of station 2 using the instruction code.

Code No.	Description
H8010	Alarm reset command (hexadecimal)

Set data	Description
H1EA5	Execution data (hexadecimal)

Reset the servo amplifier by turning on X20.

The respond code at instruction code execution is set to D2.

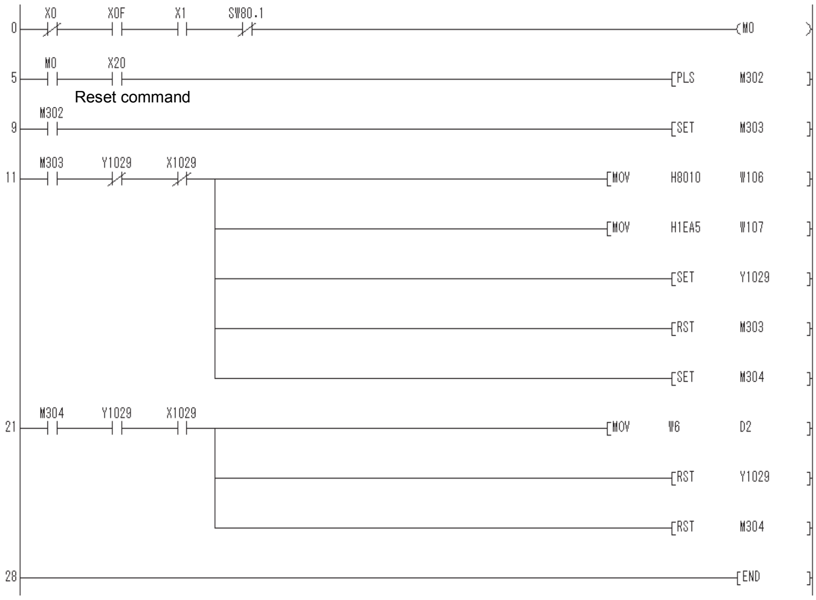

Checks data link status of station No.2.

Writes alarm reset command (H8010) to RWw6 and execution data (H1EA5) to RWw7.

Turns on instruction code execution demand (RY29).

Reads respond code (RWr6) to D2 when instruction code execution completion (RX29) turns on.

Turns off instruction code execution demand (RY29).

3.7.6 Operation

This section explains the operation programs of the servo amplifier.

(1) JOG operation

Perform JOG operation of the servo amplifier of station 1 and read the "current position" data.

Code No.	Description
H0001	Lower 16-bit data of current position (hexadecimal)
H0002	Upper 16-bit data of current position (hexadecimal)

Start the forward rotation JOG operation by turning on X22.
Start the reverse rotation JOG operation by turning on X23.

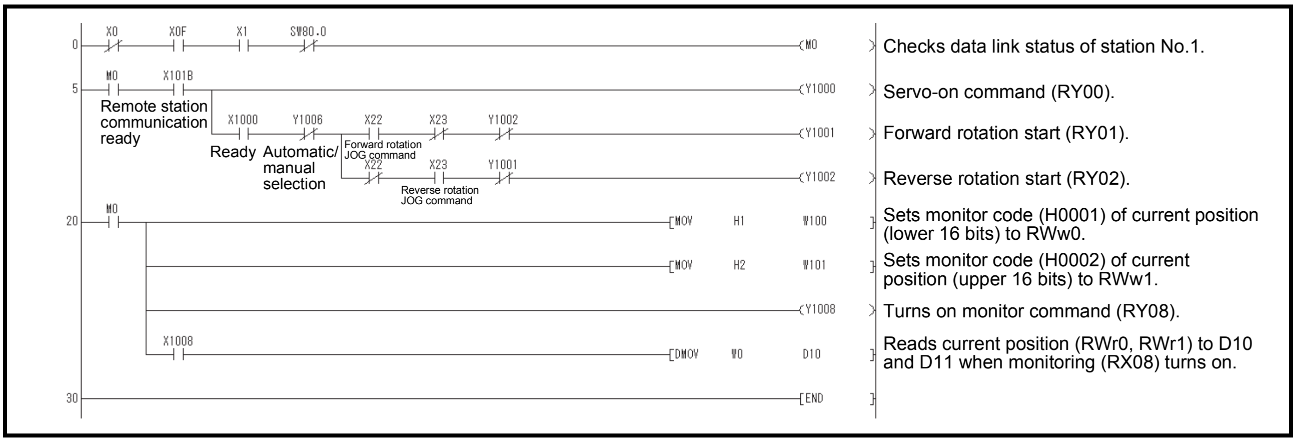

Checks data link status of station No.1.

Servo-on command (RY00).

Forward rotation start (RY01).

Reverse rotation start (RY02).

Sets monitor code (H0001) of current position (lower 16 bits) to RWw0.

Sets monitor code (H0002) of current position (upper 16 bits) to RWw1.

Turns on monitor command (RY08).

Reads current position (RWr0, RWr1) to D10 and D11 when monitoring (RX08) turns on.

(2) Remote register-based position data/speed data setting

The following program example is only applicable when two stations are occupied.

Operate the servo amplifier of station 2 after specifying the position data as "100000" and the speed data as "1000" in the direct specification mode.

Preset "□□□2" in parameter No.PC30.

Set data	Description
K100000	Position command data (decimal)
K1000	Speed command data (decimal)

Execute positioning operation with position and speed settings specified in the remote register by turning on X20.

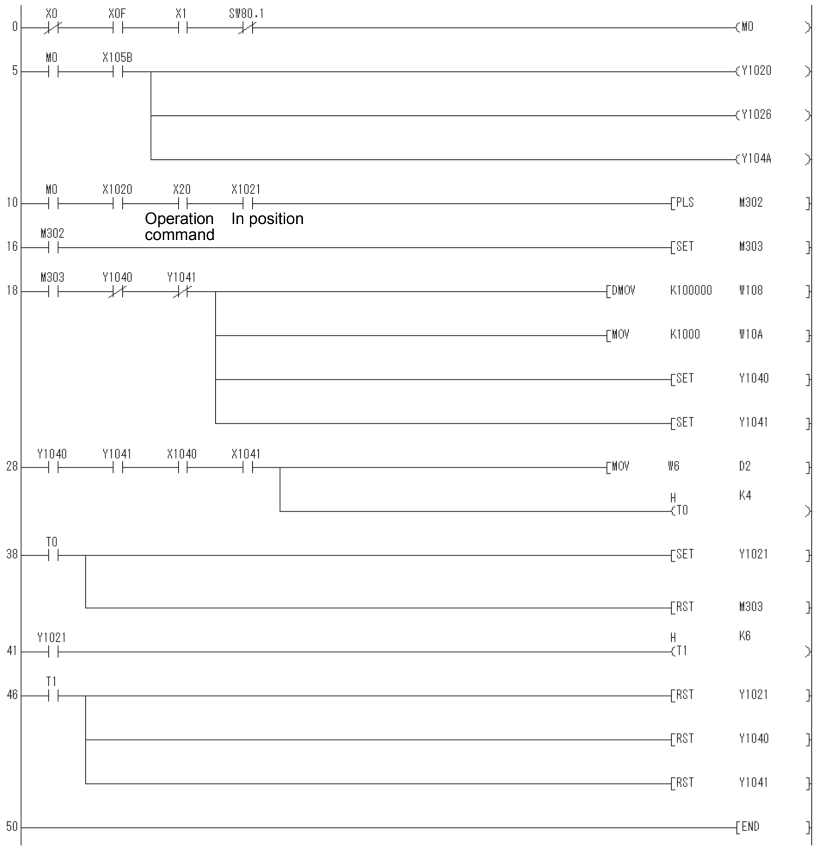

Checks data link status of station No.2.

Servo-on command (RY20)

Automatic operation mode selection (RY26)

Position/speed specifying system selection (RY4A)

Writes position command data (K100000) to RWw8, RWw9, and speed data (K1000) to RWwA.

Turns on position instruction demand (RY40).

Turns on speed instruction demand (RY41).

Reads respond code (RWr6) to D2 when Position command execution completion (RX40) and Speed command execution completion (RX41) turn on.

Position and speed data establishment time 4ms *1

Turns on forward rotation start command (RY21).

Command request time 6ms *1

Turns off forward rotation start command (RY21).

Turns off position instruction demand (RY40).

Turns off speed instruction demand (RY41).

*1: This is when the high-speed timer limit is set to 1ms.
Setting time for the timer should be larger than the command processing time or twice the link scan time whichever larger. When the setting time is short, the command cannot be received properly.

(3) Remote register-based point table No. setting (incremental value command system)

The following program example is only applicable when two stations are occupied.

Operate the servo amplifier of station 2 with incremental values after specifying the point table No.5 in the direct specification mode.

Preset "□□□0" in parameter No.PA01 and "□□□0" in parameter No.PA30.

Set data	Description
K5	Point table No. (decimal)

Execute positioning operation to the point table No.5 by turning on X20.

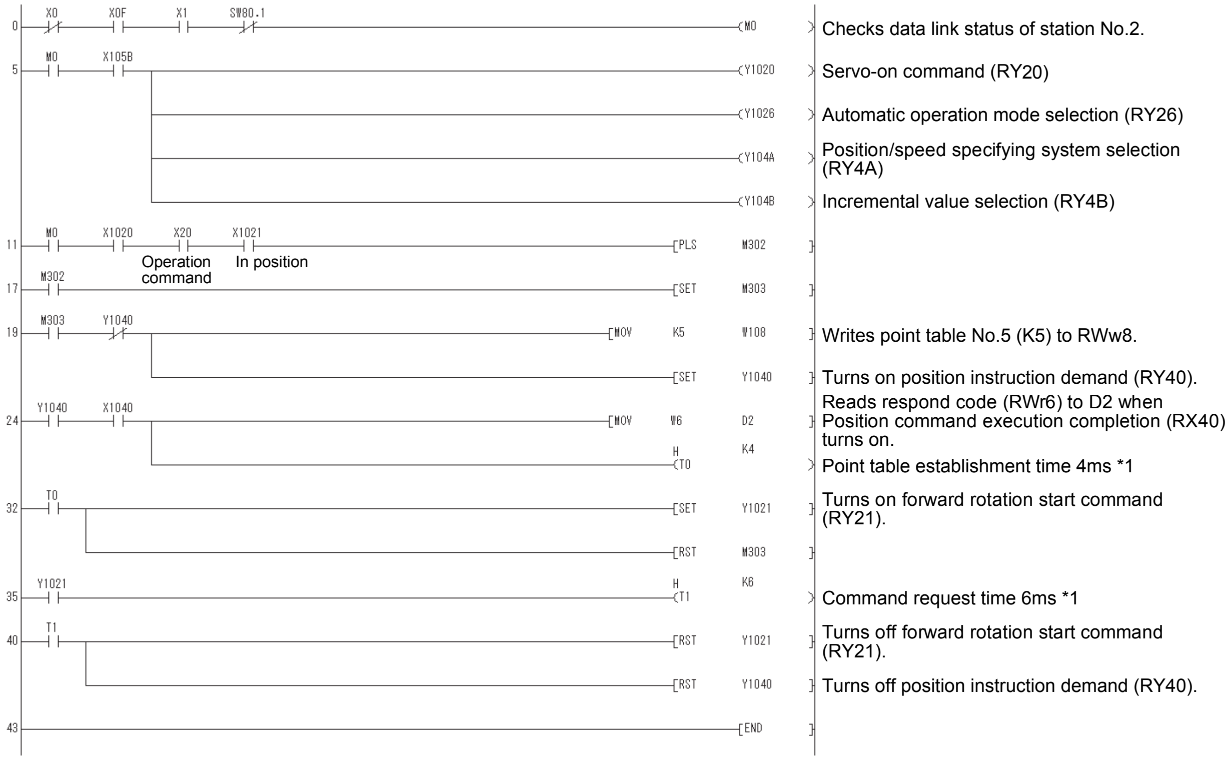

*1: This is when the high-speed timer limit is set to 1ms.
Setting time for the timer should be larger than the command processing time or twice the link scan time whichever larger. When the setting time is short, the command cannot be received properly.

3.8 Continuous operation program example

This section shows a program example which includes a series of CC-Link communication from a servo start. The program will be described on the basis of the equipment makeup shown in section 3.8.1, 3.8.3.

3.8.1 System configuration example when 1 station is occupied

As shown below, the CC-Link system master・local unit is loaded to run one servo amplifier (1 station occupied).

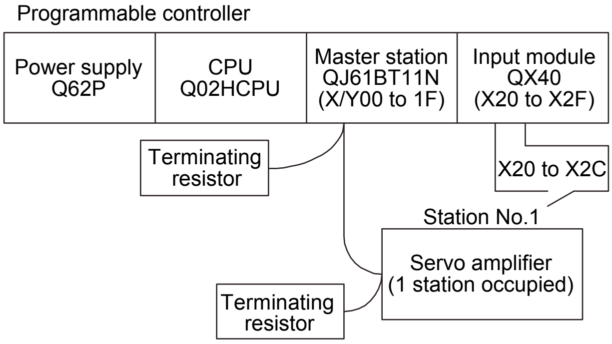

Input signal assignment

Input signal	Signal name	Description when the input is on
X20	Reset command	Resets the servo amplifier on an occurrence of a servo alarm.
X21	Servo-on command	Turns on the servo motor. (Servo-on status)
X22	Forward rotation JOG command	Executes a forward JOG operation in the manual operation mode.
X23	Reverse rotation JOG command	Executes a reverse JOG operation in the manual operation mode.
X24	Automatic/manual selection	OFF: Manual operation mode ON: Automatic operation mode
X25	Home position return command	Executes a dog type home position return when home position return is incomplete in the automatic operation mode.
X26	Proximity dog command	OFF: Proximity dog is on. (Note) ON: Proximity dog is off.
X27	Positioning start command	Executes a positioning operation to the point table number specified by X28 to X2C when home position return is incomplete in the automatic operation mode.
X28	No. selection 1	Specifies the position for the point table No. selection 1
X29	No. selection 2	Specifies the position for the point table No. selection 2
X2A	No. selection 3	Specifies the position for the point table No. selection 3
X2B	No. selection 4	Specifies the position for the point table No. selection 4
X2C	No. selection 5	Specifies the position for the point table No. selection 5

Note. This is when the parameter No.PD16 is set to "☐☐☐0 (initial value)" (detects the dog at off).

3.8.2 Program example when 1 station is occupied

POINT

- To execute a dog type home position return with the CC-Link communication functions, set "□0□□" in parameter No.PD14 and use Proximity dog (DOG) with RY03 in this example.

Operate the servo amplifier of station 1 in the positioning mode and read the "current position" data.

Operation: Alarm reset, dog type home position return, JOG operation, automatic operation under point table command

Code No.	Description
H0001	Lower 16-bit data of current position (hexadecimal)
H0002	Upper 16-bit data of current position (hexadecimal)

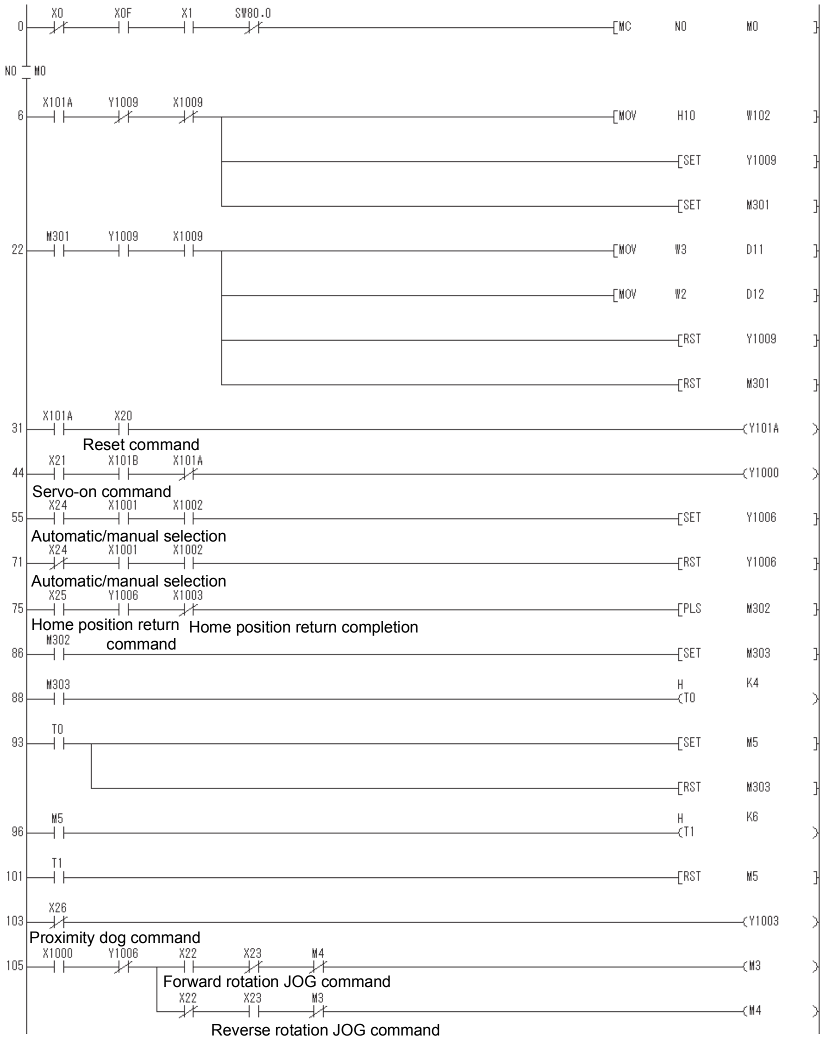

Checks data link status of station No.1.

Writes current alarm read (H0010) to RWw2 at trouble (RY1A) occurrence.

Turns on instruction code execution demand (RY09).

Reads current alarm (RWr3) and respond code (RWr2) to D11 and D12 when instruction code execution completion (RX09) turns on.

Turns off instruction code execution demand (RY09).

Alarm reset command (RY1A)

Servo-on command (RY00)

Automatic operation mode selection (RY06)

Manual operation mode selection (RY06)

Home position return request

Point table establishment time 4ms *1

Forward rotation start request

Command request time 6ms *1

Forward rotation start request reset

Proximity dog command (RY03)

Forward rotation start request

Reverse rotation start request

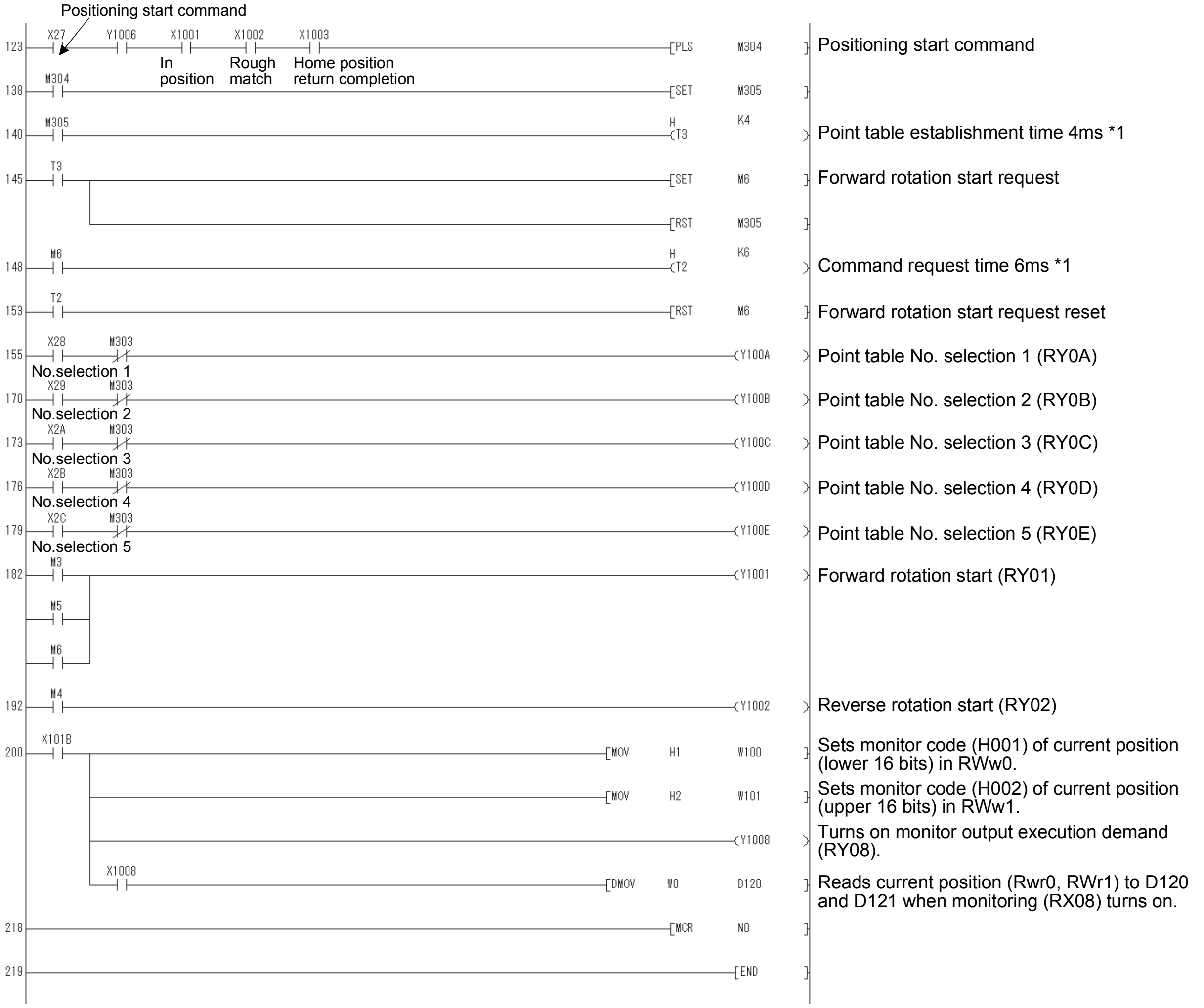

*1: This is when the high-speed timer limit is set to 1ms.
Setting time for the timer should be larger than the command processing time or twice the link scan time whichever larger. When the setting time is short, the command cannot be received properly.

3.8.3 System configuration example when 2 stations are occupied

As shown below, the CC-Link system master・local unit is loaded to run one servo amplifiers (2 stations occupied).

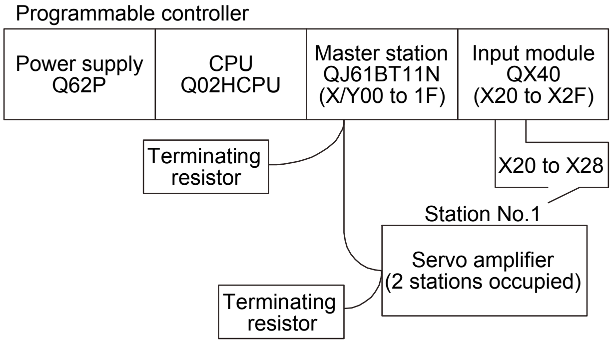

Input signal assignment

Input signal	Signal name	Description when the input is on
X20	Reset command	Resets the servo amplifier on an occurrence of a servo alarm.
X21	Servo-on command	Turns on the servo motor. (Servo-on status)
X22	Forward rotation JOG command	Executes a forward JOG operation in the manual operation mode.
X23	Reverse rotation JOG command	Executes a reverse JOG operation in the manual operation mode.
X24	Automatic/manual selection	OFF: Manual operation mode ON: Automatic operation mode
X25	Home position return command	Executes a dog type home position return when home position return is incomplete in the automatic operation mode.
X26	Proximity dog command	OFF: Proximity dog is on. (Note) ON: Proximity dog is off.
X27	Positioning start command	Executes a positioning operation with position and speed settings specified in the remote register when home position return is completed in the automatic operation mode.
X28	Position/speed setting system changing command	Changes to position/speed specification by the remote register.

Note. This is when the parameter No.PD16 is set to "□□□0 (initial value)" (detects the dog at off).

3.8.4 Program example when 2 stations are occupied

POINT

- To execute a dog type home position return with the CC-Link communication functions, set "□0□□" in parameter No.PD14 and use Proximity dog (DOG) with RY03 in this example.

Operate the servo amplifier of station 1 in the positioning mode and read the "motor speed" data.
Preset the parameter No.PC30 to "□□□2".
Operation: Alarm reset, dog type home position return, JOG operation, automatic operation under point table command

Code No.	Description
H0016	32-bit data of motor speed (hexadecimal)

Code No.	Description
K50000	Position command data (decimal)
K100	Speed command data (decimal)

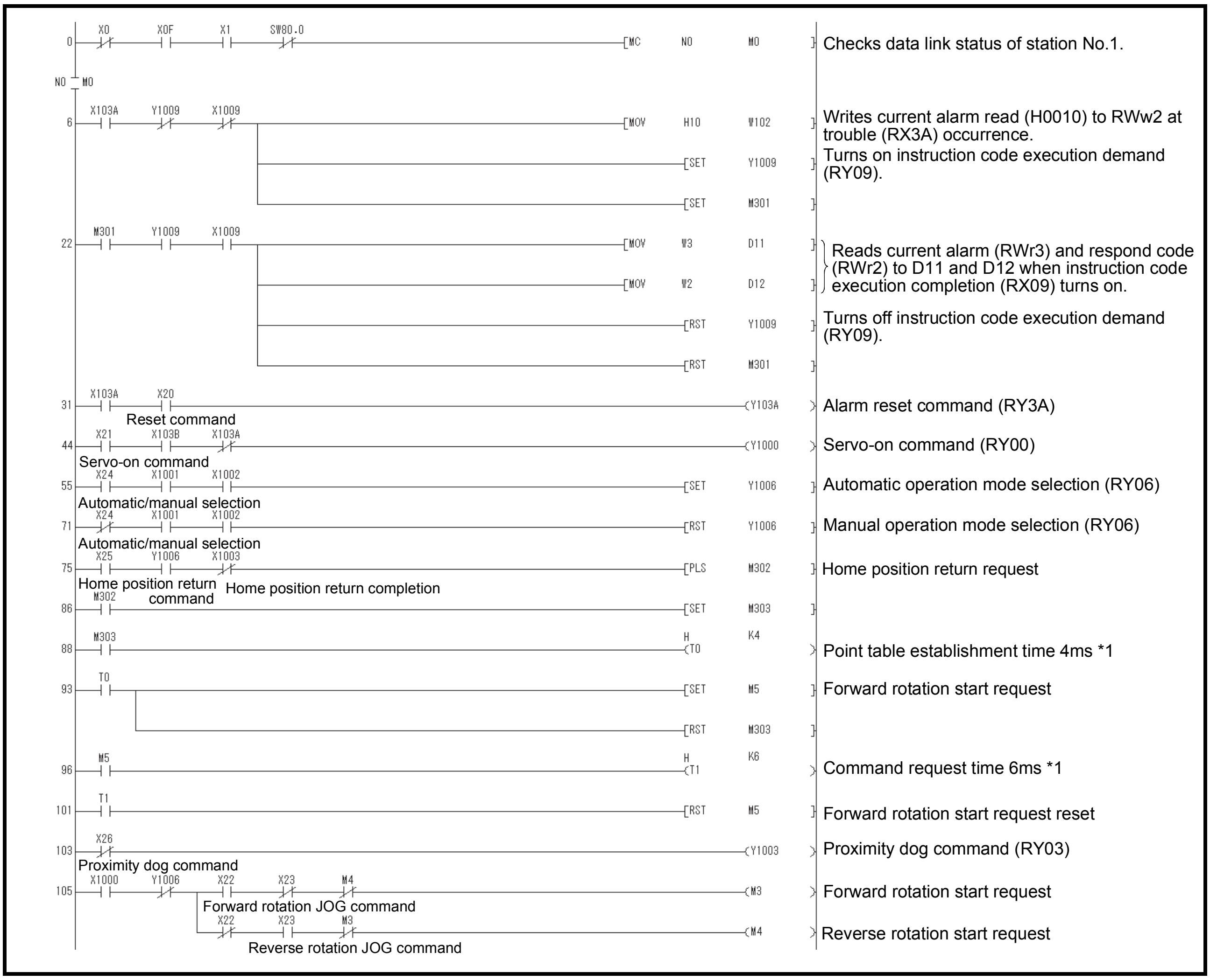

Checks data link status of station No.1.

Writes current alarm read (H0010) to RWw2 at trouble (RX3A) occurrence.

Turns on instruction code execution demand (RY09).

Reads current alarm (RWr3) and respond code (RWr2) to D11 and D12 when instruction code execution completion (RX09) turns on.

Turns off instruction code execution demand (RY09).

Alarm reset command (RY3A)

Servo-on command (RY00)

Automatic operation mode selection (RY06)

Manual operation mode selection (RY06)

Home position return request

Point table establishment time 4ms *1

Forward rotation start request

Command request time 6ms *1

Forward rotation start request reset

Proximity dog command (RY03)

Forward rotation start request

Reverse rotation start request

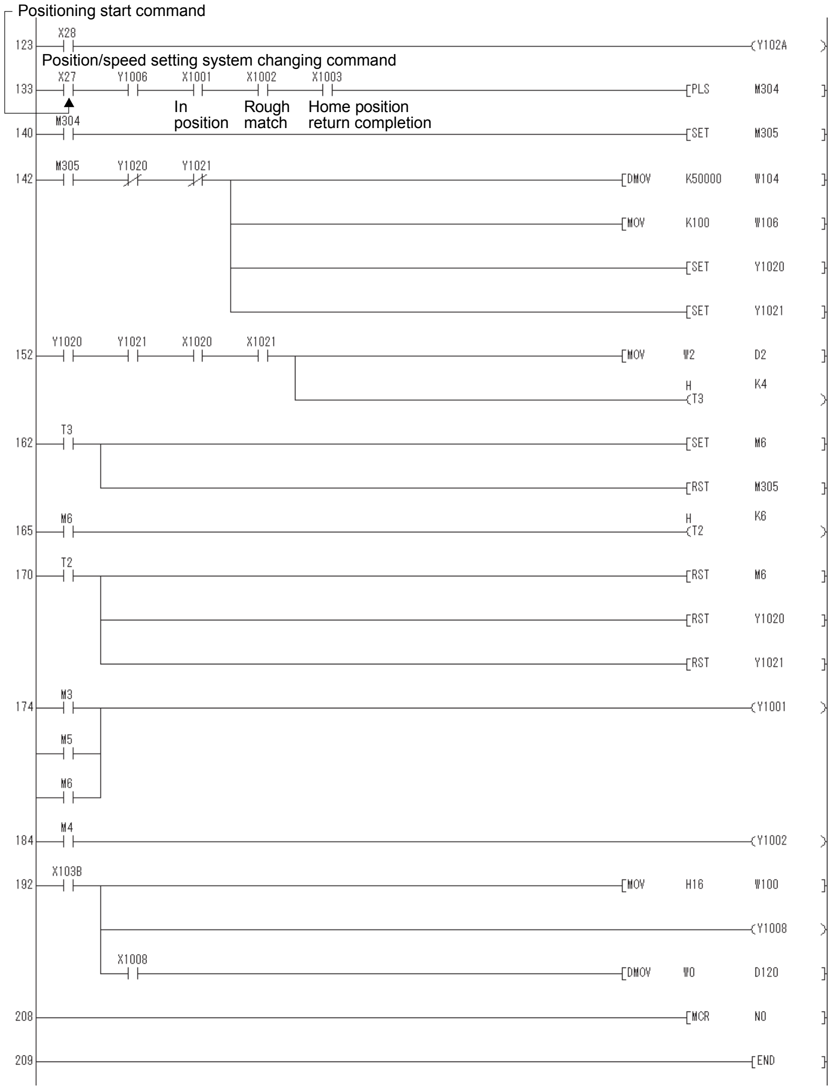

Position/speed specifying system selection (RY2A)

Writes position command data (K50000) to RWw4, RWw5, and speed data (K100) to RWw6.

Turns on position instruction demand (RY20).

Turns on speed instruction demand (RY21).

Reads respond code (RWr2) to D2 when Position command execution completion (RX20) and Speed command execution completion (RX21) turn on.

Position and speed data establishment time 4ms *1

Positioning start command

Command request time 6ms *1

Positioning start command reset

Turns off position instruction demand (RY20).

Turns off speed instruction demand (RY21).

Forward rotation start (RY01)

Reverse rotation start (RY02)

Sets monitor code (H0016) of motor speed to RWw0.

Turns on monitor output execution demand (RY08).

Reads motor speed (RWr0, RWr1) to D120 and D121 when monitoring (RX08) turns on.

*1: This is when the high-speed timer limit is set to 1ms.
Setting time for the timer should be larger than the command processing time or twice the link scan time whichever larger. When the setting time is short, the command cannot be received properly.

4. SIGNALS AND WIRING

⚠WARNING	▪ Any person who is involved in wiring should be fully competent to do the work. ▪ Before wiring, turn off the power and wait for 15 minutes or more until the charge lamp turns off. Then, confirm that the voltage between P(+) and N(−) is safe with a voltage tester and others. Otherwise, an electric shock may occur. In addition, always confirm from the front of the servo amplifier whether the charge lamp is off or not. ▪ Ground the servo amplifier and the servo motor securely. ▪ Do not attempt to wire the servo amplifier and servo motor until they have been installed. Otherwise, you may get an electric shock. ▪ The cables should not be damaged, stressed excessively, loaded heavily, or pinched. Otherwise, you may get an electric shock. ▪ To avoid an electric shock, insulate the connections of the power supply terminals.

⚠CAUTION

- Wire the equipment correctly and securely. Otherwise, the servo motor may operate unexpectedly, resulting in injury.
- Connect cables to correct terminals to prevent a burst, fault, etc.
- Ensure that polarity (+, −) is correct. Otherwise, a burst, damage, etc. may occur.
- The surge absorbing diode installed to the DC relay designed for control output should be fitted in the specified direction. Otherwise, the signal is not output due to a fault, disabling the emergency stop and other protective circuits.

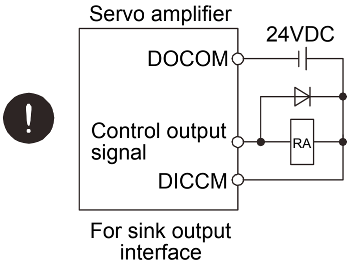

For sink output interface

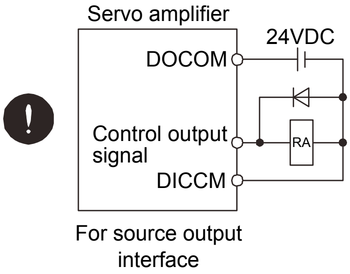

For source output interface

- Use a noise filter, etc. to minimize the influence of electromagnetic interference, which may be given to electronic equipment used near the servo amplifier.
- Do not install a power capacitor, surge suppressor or radio noise filter (FR-BIF-(H) option) with the power line of the servo motor.
- When using the regenerative resistor, switch power off with the alarm signal. Otherwise, a transistor fault or the like may overheat the regenerative resistor, causing a fire.
- Do not modify the equipment.

⚠ CAUTION

- Connect the servo amplifier power output (U, V and W) to the servo motor power input (U, V and W) directly. Do not let a magnetic contactor, etc. intervene. Otherwise, a malfunction or fault may occur.

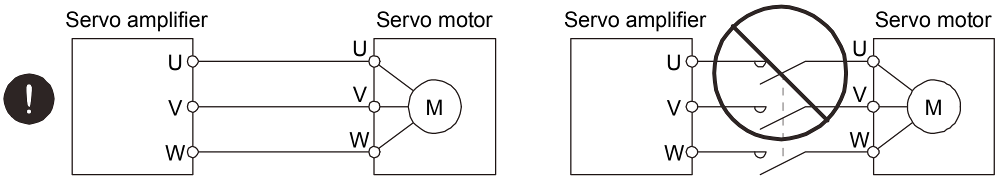

4.1 Input power supply circuit

⚠ CAUTION

- Always connect a magnetic contactor between the power supply and the power supply (L_1·L_2 and L_3) of the servo amplifier, in order to configure a circuit that shuts down the power supply on the side of the servo amplifier's power supply. If a magnetic contactor is not connected, continuous flow of a large current may cause a fire when the servo amplifier malfunctions.
- Use the malfunction (ALM) to switch power off. Otherwise, a regenerative transistor fault or the like may overheat the regenerative resistor, causing a fire.
- N (-) terminal is not a neutral point of the power supply. Incorrect wiring will cause a burst, damage, etc.
- Check the servo amplifier model, and then input proper voltage to the servo amplifier power supply. If input voltage exceeds the upper limit of the specification, the servo amplifier will break down.

Wire the power supply and main circuit as shown below so that the servo-on (RYn0) turns off as soon as alarm occurrence is detected and power is shut off.

A no-fuse breaker (MCCB) must be used with the input cables of the power supply.

(1) For 3-phase 200 to 230VAC power supply to MR-J3-10T to MR-J3-350T

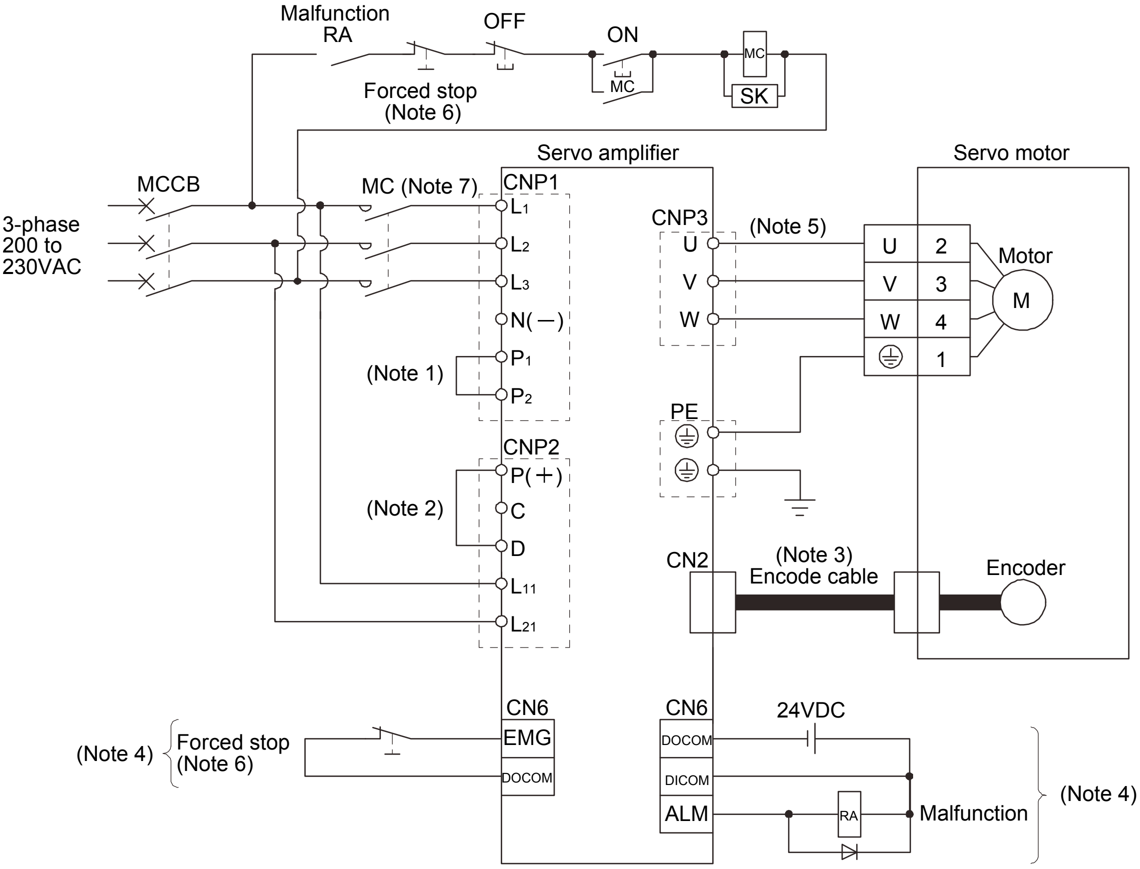

Note 1. Always connect P_1 and P_2. (Factory-wired.) When using the power factor improving DC reactor, refer to section 14.11.

2. Always connect P(＋) and D. (Factory-wired.) When using the regenerative option, refer to section 14.2.
3. For encoder cable, use of the option cable is recommended. Refer to section 14.1 for selection of the cable.
4. For the sink I/O interface. For the source I/O interface, refer to section 4.8.3.
5. Refer to section 4.10.
6. Configure the circuit which shuts off main circuit power with external sequence at forced stop (EMG) off.
7. Use a magnetic contactor with an operation delay time (interval between current being applied to the coil until closure of contacts) of 80ms or less.

(2) For 1-phase 200 to 230VAC power supply to MR-J3-10T to MR-J3-70T

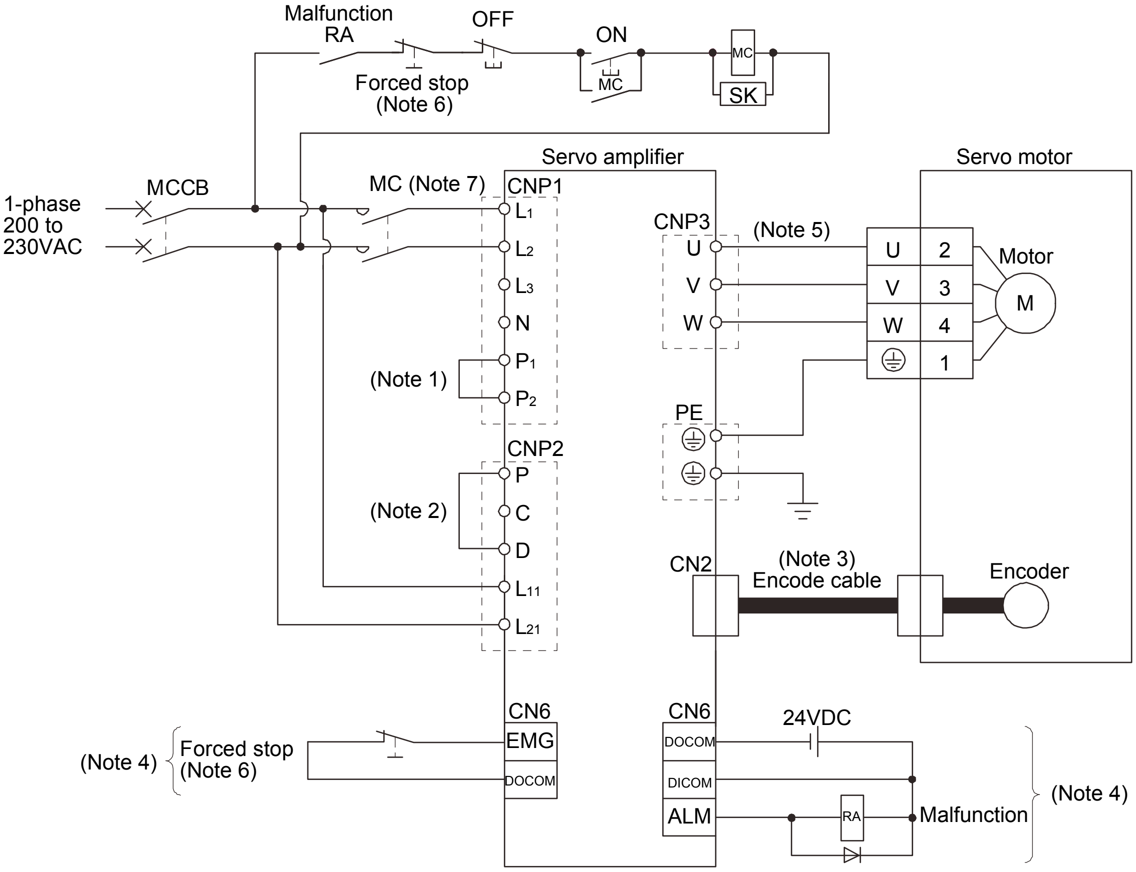

Note 1. Always connect P_1 and P_2. (Factory-wired.) When using the power factor improving DC reactor, refer to section 14.11.
2. Always connect P and D. (Factory-wired.) When using the regenerative option, refer to section 14.2.
3. For encoder cable, use of the option cable is recommended. Refer to section 14.1 for selection of the cable.
4. For the sink I/O interface. For the source I/O interface, refer to section 4.8.3.
5. Refer to section 4.10.
6. Configure the circuit which shuts off main circuit power with external sequence at forced stop (EMG) off.
7. Use a magnetic contactor with an operation delay time (interval between current being applied to the coil until closure of contacts) of 80ms or less.

(3) MR-J3-10T1 to MR-J3-40T1

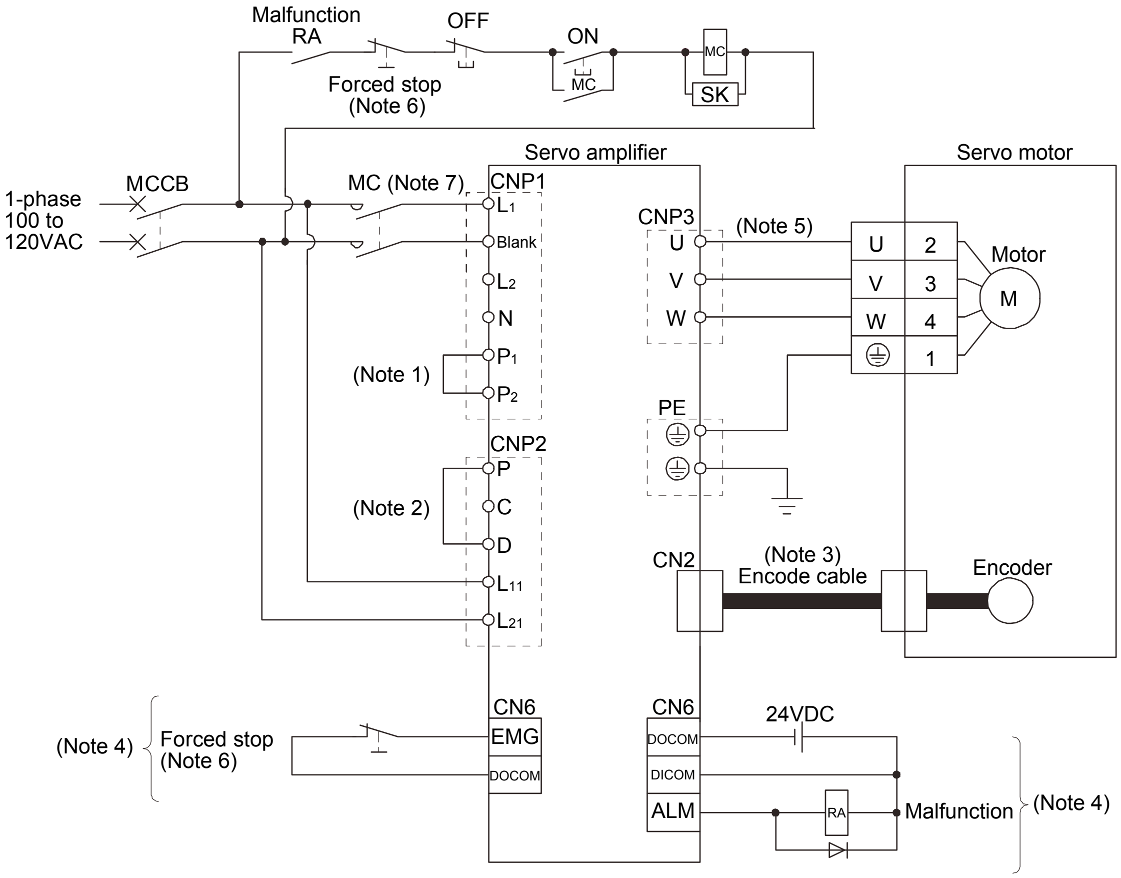

Note 1. Always connect P1 and P2. (Factory-wired.) The power factor improving DC reactor cannot be used.

2. Always connect P and D. (Factory-wired.) When using the regenerative option, refer to section 14.2.

3. For encoder cable, use of the option cable is recommended. Refer to section 14.1 for selection of the cable.

4. For the sink I/O interface. For the source I/O interface, refer to section 4.8.3.

5. Refer to section 4.10.

6. Configure the circuit which shuts off main circuit power with external sequence at forced stop (EMG) off.

7. Use a magnetic contactor with an operation delay time (interval between current being applied to the coil until closure of contacts) of 80ms or less.

(4) MR-J3-60T4 to MR-J3-200T4

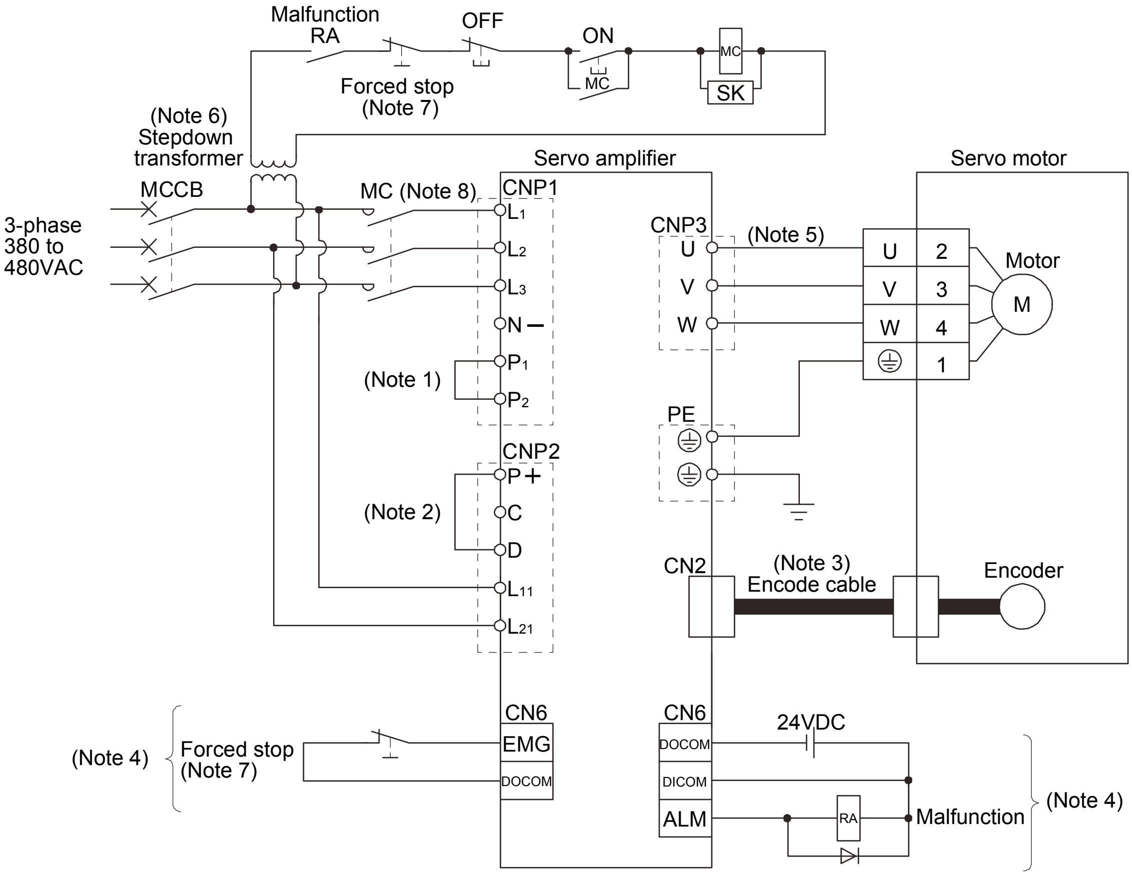

Note 1. Always connect P1 and P2. (Factory-wired.) When using the power factor improving DC reactor, refer to section 14.11.

2. Always connect P and D. (Factory-wired.) When using the regenerative option, refer to section 14.2.
3. For encoder cable, use of the option cable is recommended. Refer to section 14.1 for selection of the cable.
4. For the sink I/O interface. For the source I/O interface, refer to section 4.8.3.
5. Refer to section 4.10.
6. Stepdown transformer is required for coil voltage of magnetic contactor more than 200V class.
7. Configure the circuit which shuts off main circuit power with external sequence at forced stop (EMG) off.
8. Use a magnetic contactor with an operation delay time (interval between current being applied to the coil until closure of contacts) of 80ms or less.

(5) MR-J3-500T · MR-J3-700T

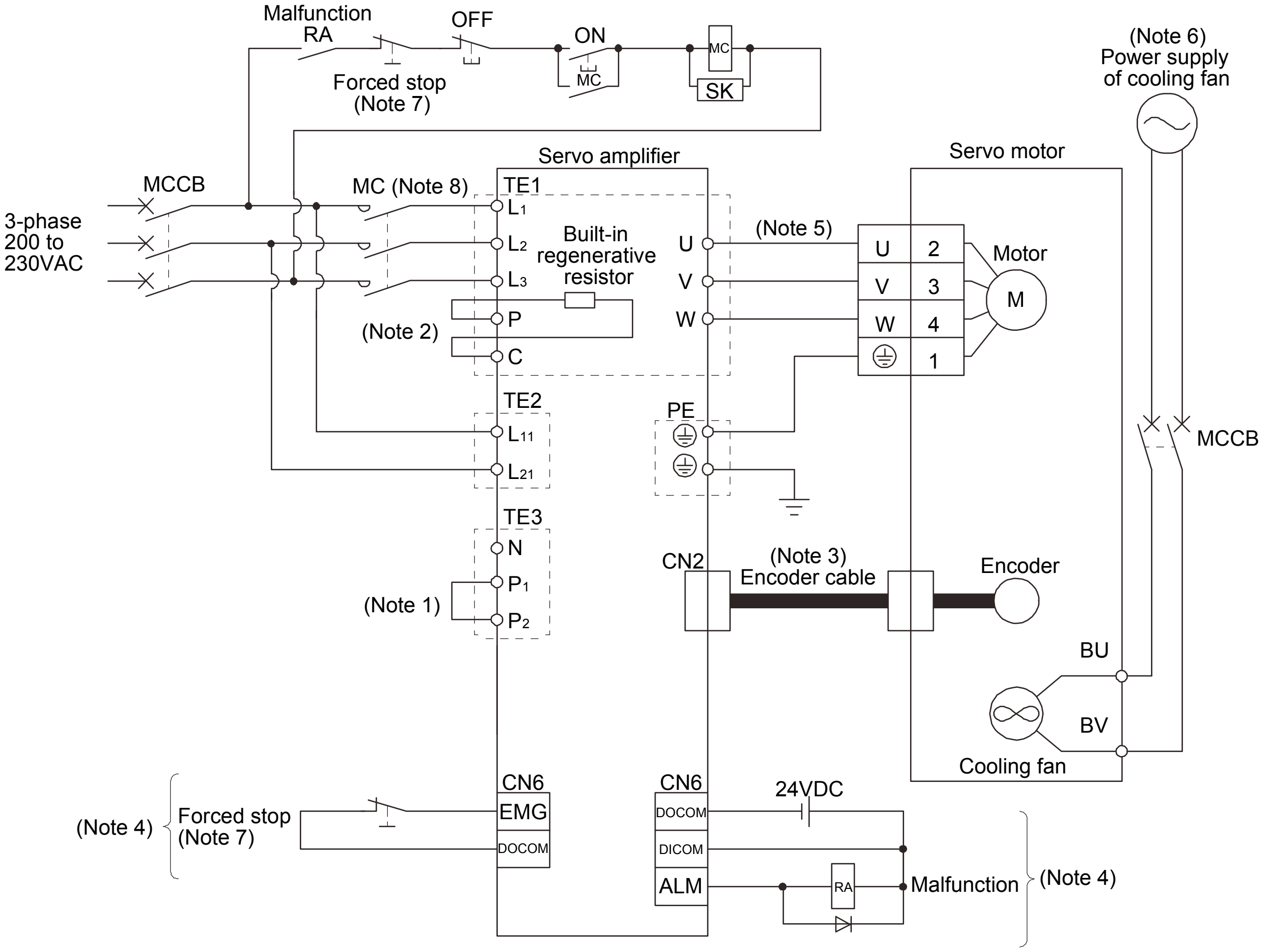

Note 1. Always connect P1 and P2. (Factory-wired.) When using the power factor improving DC reactor, refer to section 14.11.

2. Always connect P and D. (Factory-wired.) When using the regenerative option, refer to section 14.2.
3. For encoder cable, use of the option cable is recommended. Refer to section 14.1 for selection of the cable.
4. For the sink I/O interface. For the source I/O interface, refer to section 4.8.3.
5. Refer to section 4.10.
6. A cooling fan is attached to the HA-LP601 and the HA-LP701M servo motors. For power supply specification of the cooling fan, refer to section 4.10.2 (3) (b).
7. Configure the circuit which shuts off main circuit power with external sequence at forced stop (EMG) off.
8. Use a magnetic contactor with an operation delay time (interval between current being applied to the coil until closure of contacts) of 80ms or less.

(6) MR-J3-350T4 to MR-J3-700T4

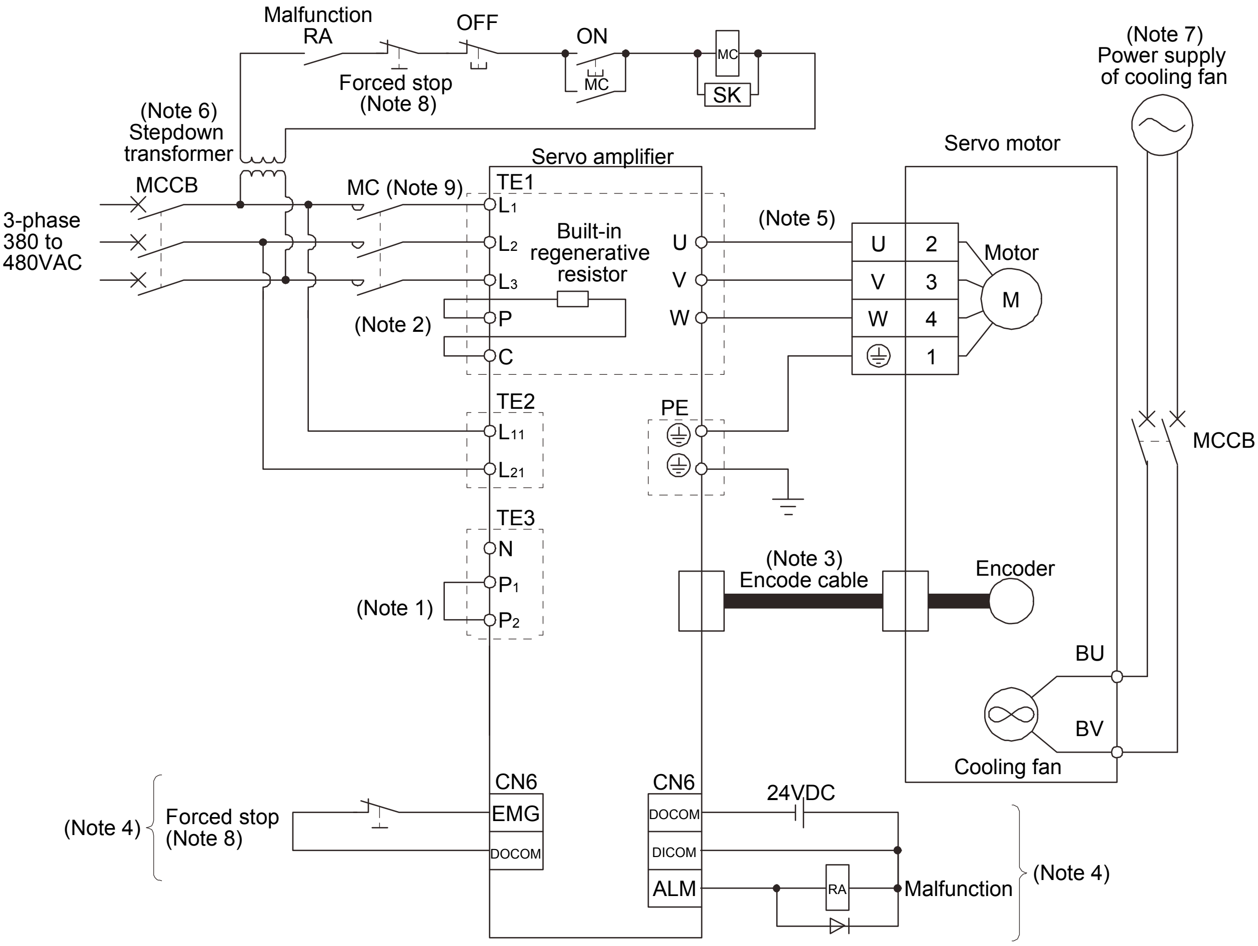

Note 1. Always connect P_1 and P_2. (Factory-wired.) When using the power factor improving DC reactor, refer to section 14.11.

2. When using the regenerative option, refer to section 14.2.
3. For encoder cable, use of the option cable is recommended. Refer to section 14.1 for selection of the cable.
4. For the sink I/O interface. For the source I/O interface, refer to section 4.8.3.
5. Refer to section 4.10.
6. Stepdown transformer is required for coil voltage of magnetic contactor more than 200V class.
7. A cooling fan is attached to the HA-LP6014 and the HA-LP701M4 servo motors. For power supply specification of the cooling fan, refer to section 4.10.2 (3) (b).
8. Configure the circuit which shuts off main circuit power with external sequence at forced stop (EMG) off.
9. Use a magnetic contactor with an operation delay time (interval between current being applied to the coil until closure of contacts) of 80ms or less.

(7) MR-J3-11KT to MR-J3-22KT

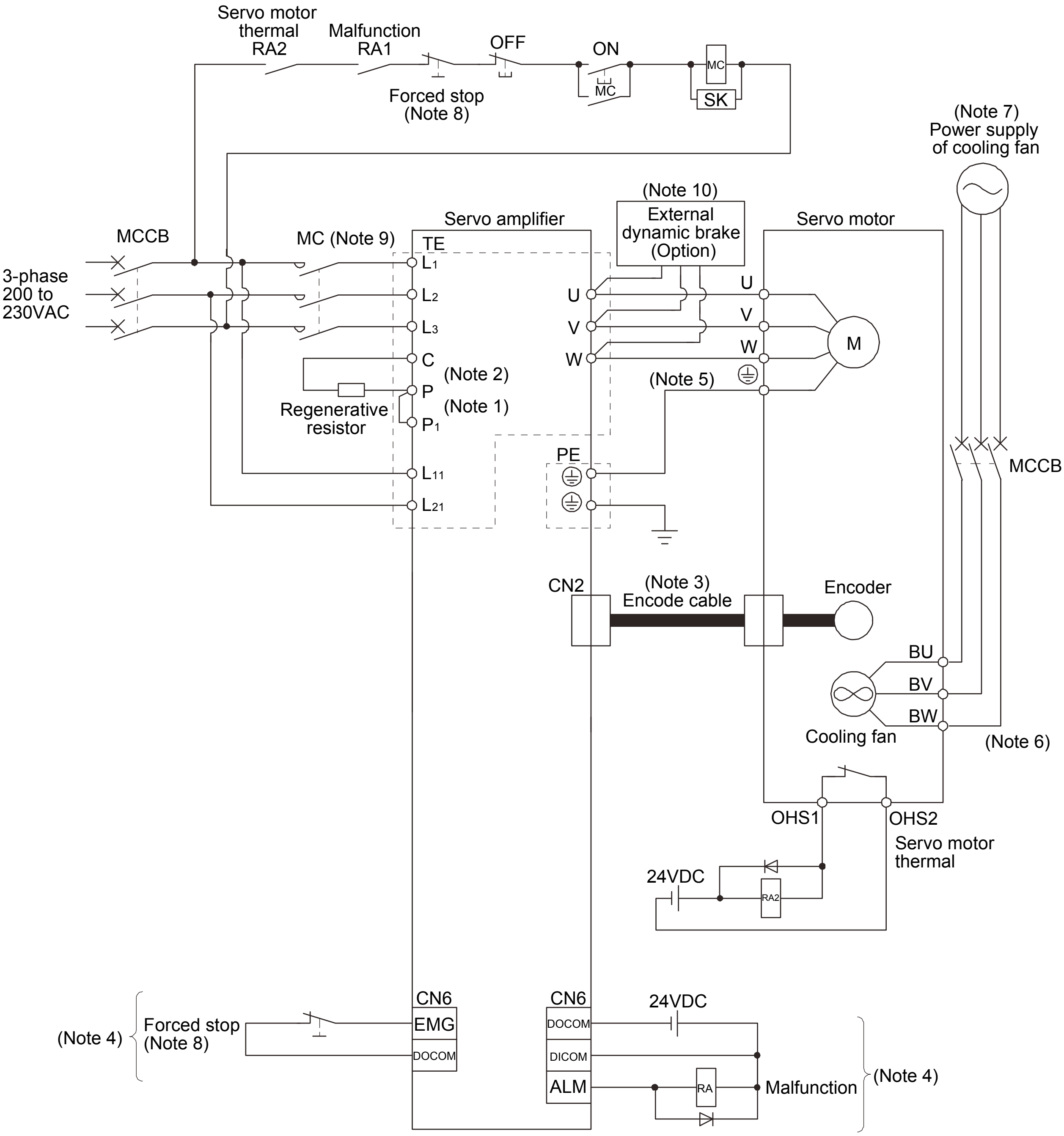

Note 1. Always connect P_1 and P_2. (Factory-wired.) When using the power factor improving DC reactor, refer to section 14.11.
2. Connect the regenerative resistor. When using the regenerative option, refer to section 14.2.
3. For the encoder cable, use of the option cable is recommended. Refer to section 14.1 for selection of the cable.
4. For the sink I/O interface. For the source I/O interface, refer to section 4.8.3.
5. Refer to section 4.10.
6. BW is not available when a 1-phase power supply is used.
7. For the cooling fan power supply, refer to section 4.10.2 (3) (b).
8. Configure the circuit which shuts off main circuit power with external sequence at forced stop (EMG) off.
9. Use a magnetic contactor with an operation delay time (interval between current being applied to the coil until closure of contacts) of 80ms or less.
10. Use an external dynamic brake for this servo amplifier. Failure to do so will cause an accident because the servo motor does not stop immediately but coasts at emergency stop. Ensure the safety in the entire equipment.

(8) MR-J3-11KT4 to MR-J3-22KT4

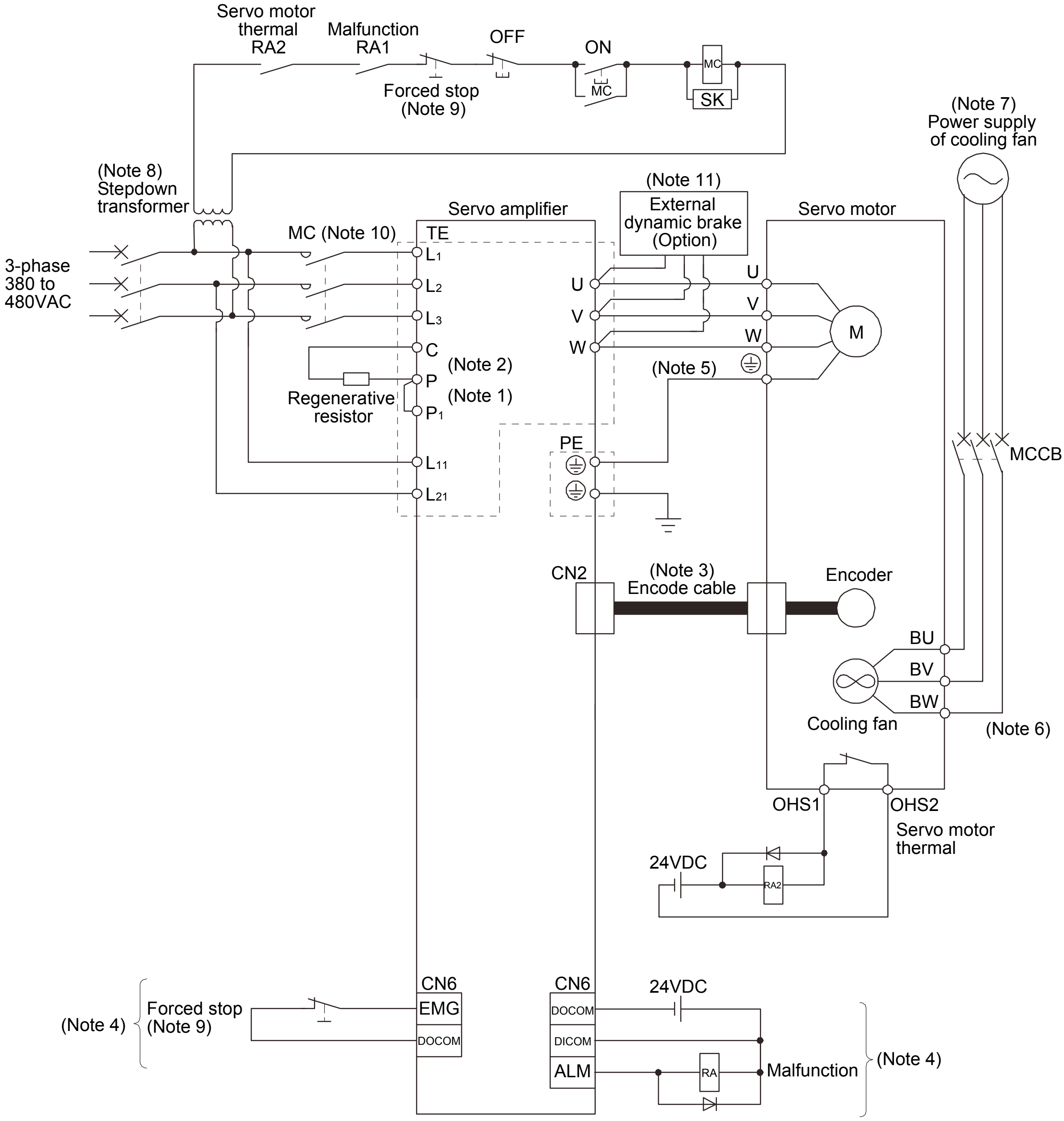

Note 1. Always connect P_1 and P_2. (Factory-wired.) When using the power factor improving DC reactor, refer to section 14.11.

2. Connect the regenerative resistor. When using the regenerative option, refer to section 14.2.
3. For encoder cable, use of the option cable is recommended. Refer to section 14.1 for selection of the cable.
4. For the sink I/O interface. For the source I/O interface, refer to section 4.8.3.
5. Refer to section 4.10.
6. Servo amplifiers do not have BW when the cooling fan power supply is 1-phase.
7. For the cooling fan power supply, refer to section 4.10.2 (3) (b).
8. Stepdown transformer is required for coil voltage of magnetic contactor more than 200V class.
9. Configure the circuit which shuts off main circuit power with external sequence at forced stop (EMG) off.
10. Use a magnetic contactor with an operation delay time (interval between current being applied to the coil until closure of contacts) of 80ms or less.
11. Use an external dynamic brake for this servo amplifier. Failure to do so will cause an accident because the servo motor does not stop immediately but coasts at emergency stop. Ensure the safety in the entire equipment.

4.2 I/O signal connection diagram

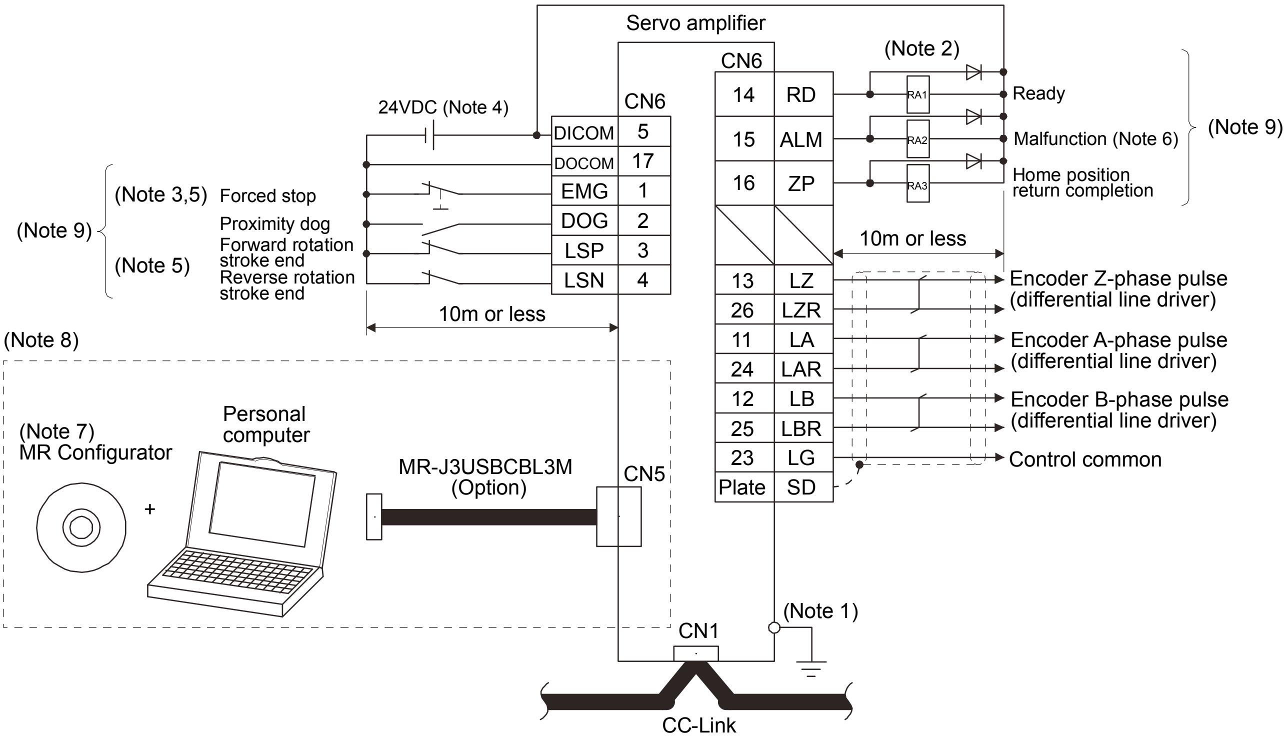

Note 1. To prevent an electric shock, always connect the protective earth (PE) terminal (terminal marked ⏚) of the servo amplifier to the protective earth (PE) of the control box.

2. Connect the diode in the correct direction. If it is connected reversely, the servo amplifier will be faulty and will not output signals, disabling the emergency stop (EMG) and other protective circuits.
3. The forced stop switch (normally closed contact) must be installed.
4. Supply 24VDC±10% 150mA current for interfaces from the outside. 150mA is the value applicable when all I/O signals are used. The current capacity can be decreased by reducing the number of I/O points. Refer to section 4.8.2 (1) that gives the current value necessary for the interface.
5. When starting operation, always turn on forced stop (EMG) and Forward/Reverse rotation stroke end (LSP/LSN). (Normally closed contacts).
6. Malfunction (ALM) turns on in normal alarm-free condition. (Normally closed contacts)
7. Use MRZJW3-SETUP 211E.
8. Personal computers or parameter modules can also be connected via the CN3 connector, enabling RS-422 communication. Note that using the USB communication function (CN5 connector) prevents the RS-422 communication function (CN3 connector) from being used, and vice versa. They cannot be used together.

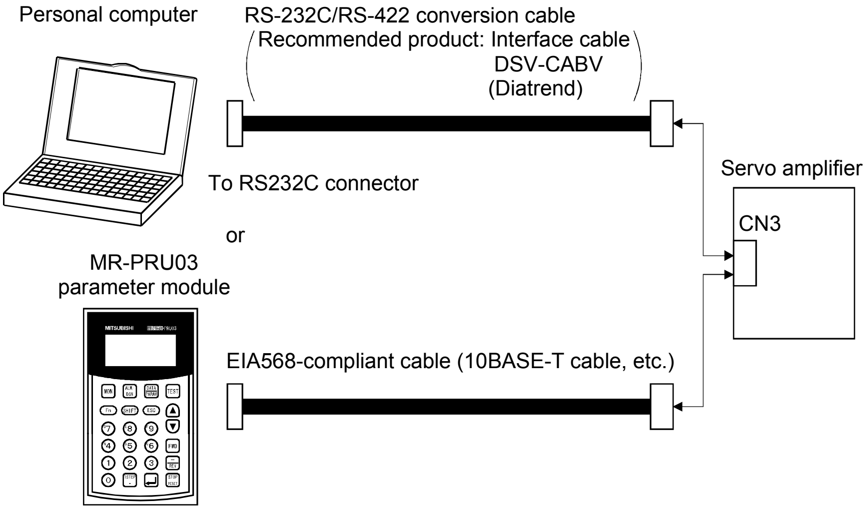

9. For the sink I/O interface. For the source I/O interface, refer to section 4.8.3.

4.3 Explanation of power supply system

4.3.1 Signal explanations

> **POINT**
>
> - For the layout of connector and terminal block, refer to outline drawings in chapter 12.

<table>
<tr><th>Abbreviation</th><th>Connection target (Application)</th><th>Description</th></tr>
<tr><td>L_1
L_2
L_3</td><td>Main circuit power supply</td><td>Supply the following power to L_1, L_2, L_3. For the 1-phase 200V to 230VAC power supply, connect the power supply to L_1, L_2, and keep L_3 open.
<table>
<tr><th>Servo amplifier / Power supply</th><th>MR-J3-10T to 70T</th><th>MR-J3-100T to 22KT</th><th>MR-J3-10T1 to 40T1</th></tr>
<tr><td>3-phase 200V to 230VAC, 50/60Hz</td><td colspan="2">L_1 · L_2 · L_3</td><td></td></tr>
<tr><td>1-phase 200V to 230VAC, 50/60Hz</td><td>L_1 · L_2</td><td></td><td></td></tr>
<tr><td>1-phase 100V to 120VAC, 50/60Hz</td><td></td><td></td><td>L_1 · L_2</td></tr>
</table>
<table>
<tr><th>Servo amplifier / Power supply</th><th>MR-J3-60T4 to 22KT4</th></tr>
<tr><td>3-phase 380V to 480VAC, 50/60Hz</td><td>L_1 · L_2 · L_3</td></tr>
</table></td></tr>
<tr><td>P_1
P_2</td><td>Power factor improving DC reactor</td><td>1) MR-J3-700T(4) or less
When not using the power factor improving DC reactor, connect P_1 and P_2. (Factory-wired.)
When using the power factor improving DC reactor, disconnect P_1 and P_2, and connect the power factor improving DC reactor to P_1 and P_2.
2) MR-J3-11KT(4) to 22KT(4)
MR-J3-11KT(4) to 22KT(4) do not have P_2.
When not using the power factor improving reactor, connect P_1 and P. (Factory-wired)
When using the power factor improving reactor, connect it to P_1 and P.
Refer to section 14.11.</td></tr>
<tr><td>P
C
D</td><td>Regenerative option</td><td>1) MR-J3-350T or less · MR-J3-200T4 or less
When using servo amplifier built-in regenerative resistor, connect P(+) and D. (Factory-wired)
When using regenerative option, disconnect P(+) and D, and connect regenerative option to P and C.
2) MR-J3-350T4 · 500T(4) · 700T(4)
MR-J3-350T4 · 500T(4) and 700T(4) do not have D.
When using servo amplifier built-in regenerative resistor, connect P and C. (Factory-wired)
When using regenerative option, disconnect P and C, and connect regenerative option to P and C.
3) MR-J3-11KT(4) to 22KT(4)
MR-J3-11KT(4) to 22KT(4) do not have D.
When not using the power regenerative converter and the brake unit, make sure to connect the regenerative option to P and C.
Refer to section 14.2 to 14.5.</td></tr>
<tr><td>L_{11}
L_{21}</td><td>Control circuit power supply</td><td>Supply the following power to L_{11} · L_{21}.
<table>
<tr><th>Servo amplifier / Power supply</th><th>MR-J3-10T to 22KT</th><th>MR-J3-10T1 to 40T1</th><th>MR-J3-60T4 to 22KT4</th></tr>
<tr><td>1-phase 200V to 230VAC, 50/60Hz</td><td>L_{11} · L_{21}</td><td></td><td></td></tr>
<tr><td>1-phase 100V to 120VAC, 50/60Hz</td><td></td><td>L_{11} · L_{21}</td><td></td></tr>
<tr><td>1-phase 380V to 480VAC, 50/60Hz</td><td></td><td></td><td>L_{11} · L_{21}</td></tr>
</table></td></tr>
<tr><td>U
V
W</td><td>Servo motor power output</td><td>Connect to the servo motor power supply terminals (U, V, W). Connect the servo amplifier power output (U, V and W) to the servo motor power input (U, V and W) directly. Do not let a magnetic contactor, etc. intervene. Otherwise, a malfunction or fault may occur.</td></tr>
<tr><td>N</td><td>Regenerative converter
Brake unit</td><td>When using the power regenerative converter/brake unit, connect it to P and N.
Do not connect to servo amplifier MR-J3-350T(4) or less.
For details, refer to section 14.3 to 14.5.</td></tr>
<tr><td>⏚</td><td>Protective earth (PE)</td><td>Connect to the earth terminal of the servo motor and to the protective earth (PE) of the control box to perform grounding.</td></tr>
</table>

4.3.2 Power-on sequence

POINT

- The output signal may be instable at power-on.

(1) Power-on procedure

1) Always wire the power supply as shown in above section 4.1 using the magnetic contactor with the main circuit power supply (three-phase: L1, L2, L3, single-phase: L1, L2). Configure up an external sequence to switch off the magnetic contactor as soon as an alarm occurs.

2) Switch on the control circuit power supply L11, L21 simultaneously with the main circuit power supply or before switching on the main circuit power supply. If the main circuit power supply is not on, the display shows the corresponding warning. However, by switching on the main circuit power supply, the warning disappears and the servo amplifier will operate properly.

3) The servo amplifier can accept the servo-on (RYn0) about 2 to 2.5s after the main circuit power supply is switched on. Therefore, when servo-on (RYn0) is switched on simultaneously with the main circuit power supply, the base circuit will switch on in about 2 to 2.5s, and the ready (RD) will switch on in further about 5ms, making the servo amplifier ready to operate. (Refer to paragraph (2) in this section.)

4) When parameter No.PD20 (Function selection D-1) is "□□0□" and the reset (RY(n+1)A or RY(n+3)A) is switched on, the base circuit is shut off and the servo motor shaft coasts.

(2) Timing chart

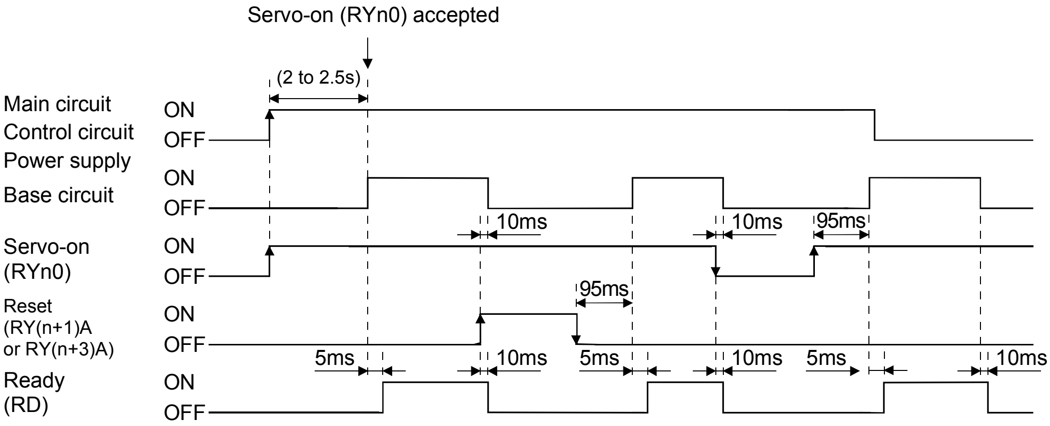

Power-on timing chart

(3) Forced stop

CAUTION

- Provide an external forced stop circuit to ensure that operation can be stopped and power switched off immediately.

Make up a circuit that shuts off main circuit power as soon as EMG is turned off at a forced stop. When EMG is turned off, the dynamic brake is operated to bring the servo motor to a sudden stop. At this time, the display shows the servo forced stop warning (AE6).
During ordinary operation, do not use the external forced stop (EMG) to alternate stop and run.
The servo amplifier life may be shortened.
Also, if the forward rotation start (RYn1) and reverse rotation start (RYn2) are on or a pulse train is input during a forced stop, the servo motor will rotate as soon as the warning is reset. During a forced stop, always shut off the run command. Note also that during a forced stop, RYn1 and RYn2 must be off.

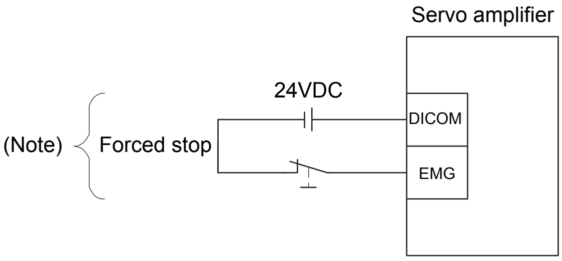

Note. For the sink I/O interface. For the source I/O interface, refer to section 4.8.3.

4.3.3 CNP1, CNP2, CNP3 wiring method

POINT

- Refer to table 14.1 in section 14.9 for the wire sizes used for wiring.
- MR-J3-500T to more, MR-J3-350T4 or more does not have these connectors.

Use the supplied servo amplifier power supply connectors for wiring of CNP1, CNP2 and CNP3.

(1) MR-J3-10T to MR-J3-100T

(a) Servo amplifier power supply connectors

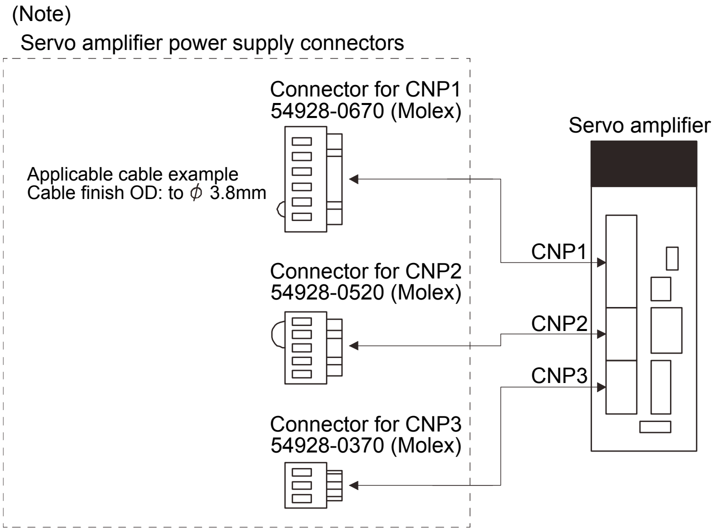

Note. These connectors are of insert type. As the crimping type, the following connectors (Molex) are recommended.
For CNP1: 51241-0600 (connector), 56125-0118 (terminal)
For CNP2: 51240-0500 (connector), 56125-0118 (terminal)
For CNP3: 51241-0300 (connector), 56125-0118 (terminal)
Crimping tool: CNP57349-5300
Applicable cable example
Cable finish OD: to ϕ3.8mm

(b) Termination of the cables

Solid wire: After the insulator has been stripped, the cable can be used as it is.

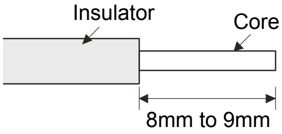

Twisted wire: Use the cable after stripping the insulator and twisting the core. At this time, take care to avoid a short caused by the loose wires of the core and the adjacent pole. Do not solder the core as it may cause a contact fault. Alternatively, a bar terminal may be used to put the wires together.

Cable size		Bar terminal type		Crimping tool (Note 2)
[mm^2]	AWG	For 1 cable (Note 1)	For 2 cable	
1.25/1.5	16	AI1.5-10BK	AI-TWIN2 × 1.5-10BK	Variocrimp 4 206-204
2/2.5	14	AI2.5-10BU		

Note 1. Manufacturer: Phoenix Contact

2. Manufacturer: WAGO

(c) The twin type connector for CNP2 (L_{11} · L_{21}): 721-2105/026-000 (WAGO)

Using this connector enables passing a wire of control circuit power supply.

Refer to appendix 2 for details of connector.

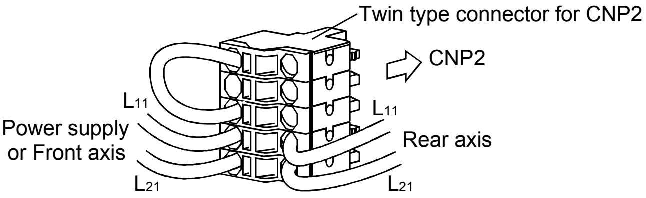

(2) MR-J3-200TN · MR-J3-60T4 to MR-J3-200T4

(a) Servo amplifier power supply connectors

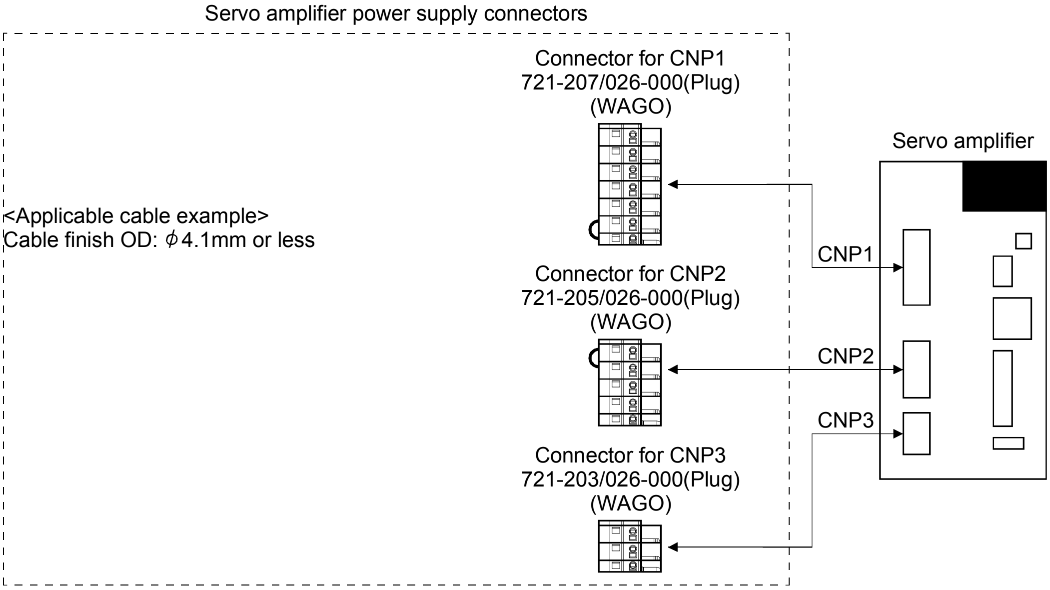

Note. The appearance and connector (CNP1, CNP2 and CNP3) of the MR-J3-200T servo amplifier has been changed since January 2008. The previous servo amplifiers is changed to MR-J3-200T-RT.For MR-J3-200T-RT, refer to Appendix 5.

(b) Termination of the cables

Solid wire: After the insulator has been stripped, the cable can be used as it is.

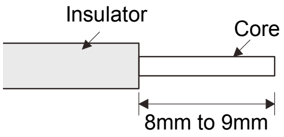

Twisted wire: Use the cable after stripping the insulator and twisting the core. At this time, take care to avoid a short caused by the loose wires of the core and the adjacent pole. Do not solder the core as it may cause a contact fault. Alternatively, a bar terminal may be used to put the wires together.

Cable size		Bar terminal type		Crimping tool (Note 2)
[mm^2]	AWG	For 1 cable	For 2 cable	
1.25/1.5	16	AI1.5-10BK (Note 1)	AI-TWIN2 × 1.5-10BK (Note 1)	Variocrimp 4 206-204
2	14	216-205 (Note 2)		

Note 1. Manufacturer: Phoenix Contact

2. Manufacturer: WAGO

c) The twin type connector for CNP2 (L_{11} · L_{21}): 721-2105/026-000 (WAGO)

Using this connector enables passing a wire of control circuit power supply.

Refer to appendix 2 for details of connector.

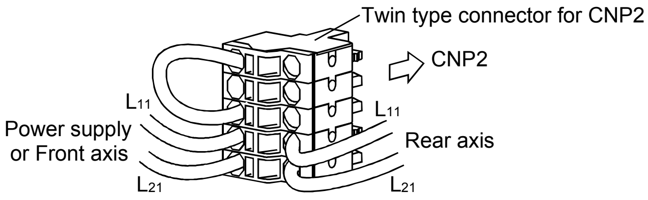

(3) MR-J3-350T

(a) Servo amplifier power supply connectors

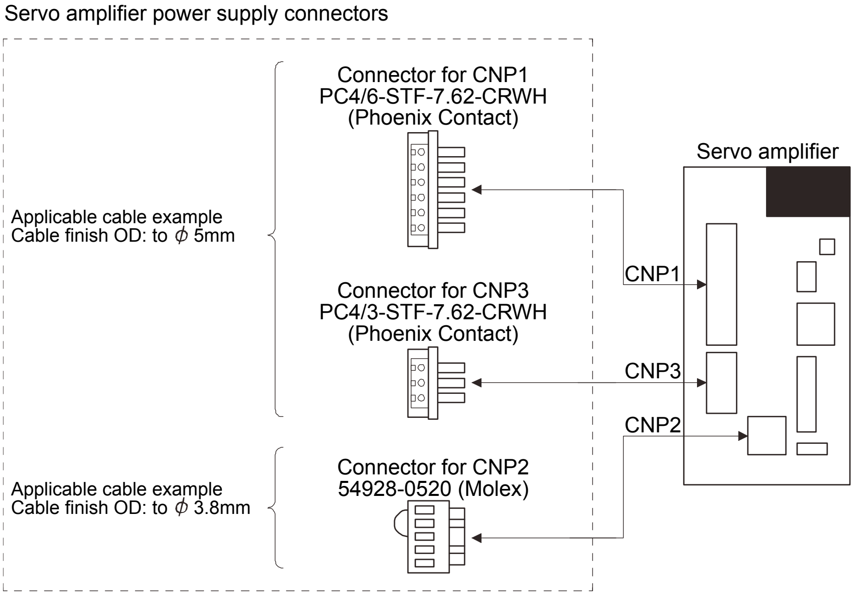

(b) Termination of the cables

1) CNP1・CNP3

Solid wire: After the insulator has been stripped, the cable can be used as it is.

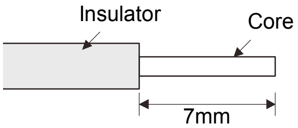

Twisted wire: Use the cable after stripping the insulator and twisting the core. At this time, take care to avoid a short caused by the loose wires of the core and the adjacent pole. Do not solder the core as it may cause a contact fault. Alternatively, a bar terminal may be used to put the wires together.

Cable size		Bar terminal type		Crimping tool	Manufacturer
[mm^2]	AWG	For 1 cable	For 2 cables		
1.25/1.5	16	AI1.5-8BK	AI-TWIN2×1.5-8BK	CRIMPFOX-ZA3	Phoenix Contact
2.0/2.5	14	AI2.5-8BU	AI-TWIN2×2.5-10BU		
3.5	12	AI4-10Y			

2) CNP2

CNP2 is the same as MR-J3-100T or smaller capacities. Refer to (1) (b) in this section.

(4) Insertion of cable into Molex and WAGO connectors

Insertion of cable into 54928-0670, 54928-0520, 54928-0370 (Molex) connectors and 721-207/026-000, 721-205/026-000 and 721-203/026-000 (WAGO) connectors are as follows.

The following explains for Molex, however use the same procedures for inserting WAGO connectors as well.

POINT

- It may be difficult for a cable to be inserted to the connector depending on wire size or bar terminal configuration. In this case, change the wire type or correct it in order to prevent the end of bar terminal from widening, and then insert it.

How to connect a cable to the servo amplifier power supply connector is shown below.

(a) When using the supplied cable connection lever

1) The servo amplifier is packed with the cable connection lever.

a) 54932-0000 (Molex)

[Unit: mm]

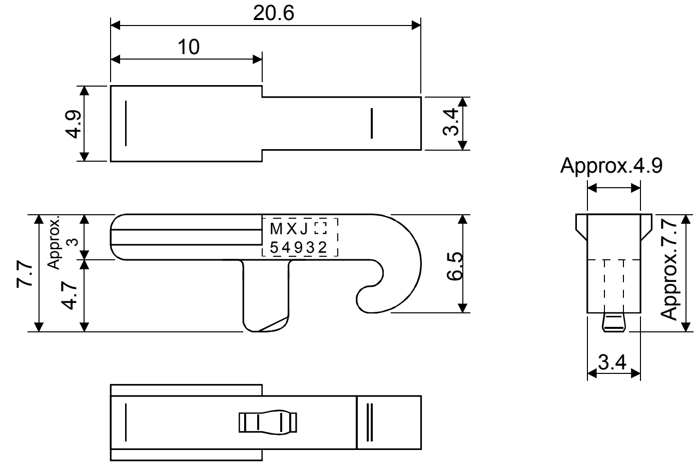

b) 231-131 (WAGO)

[Unit: mm]

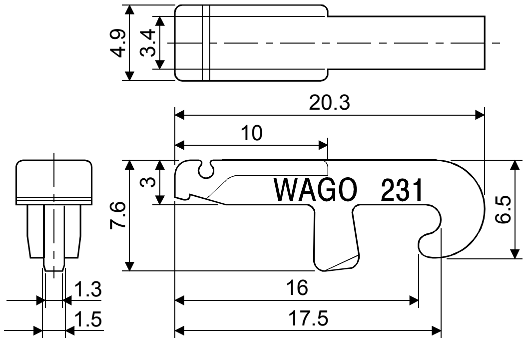

2) Cable connection procedure

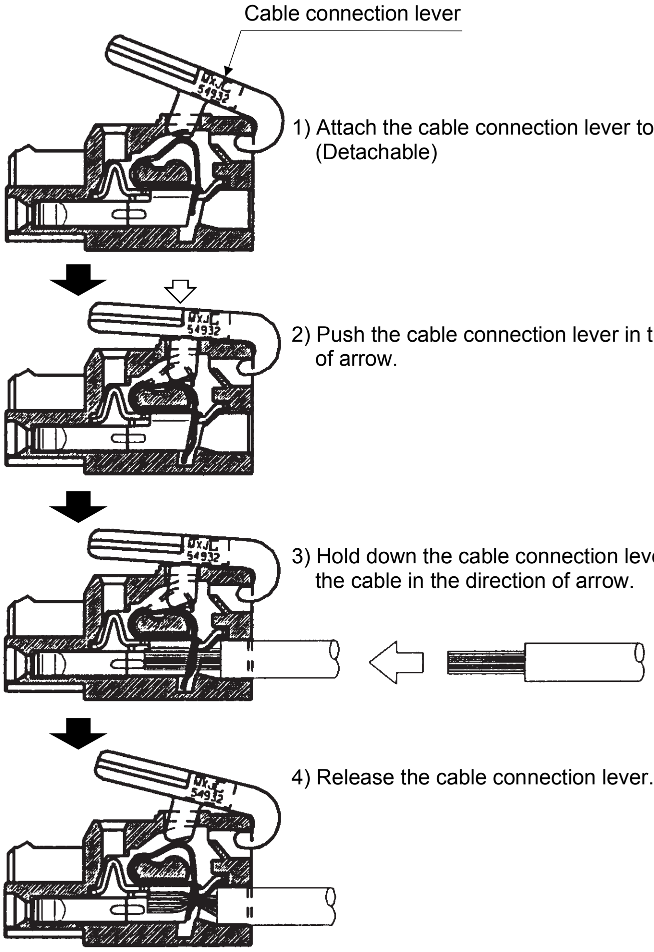

1) Attach the cable connection lever to the housing. (Detachable)

2) Push the cable connection lever in the direction of arrow.

3) Hold down the cable connection lever and insert the cable in the direction of arrow.

4) Release the cable connection lever.

(b) Inserting the cable into the connector

1) Applicable flat-blade screwdriver dimensions

Always use the screwdriver shown here to do the work.

[Unit: mm]

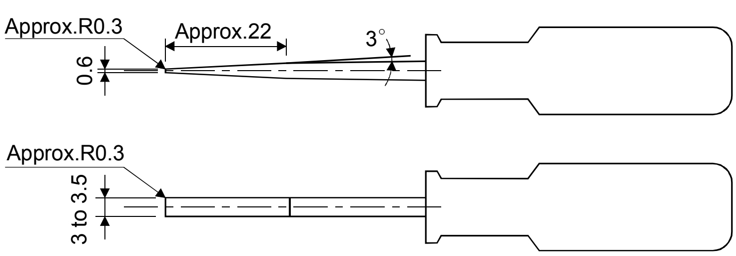

2) When using the flat-blade screwdriver - part 1

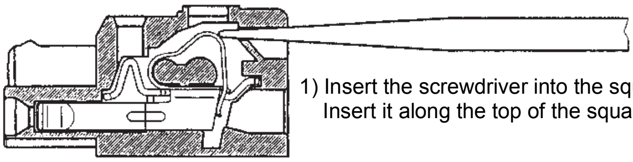

1) Insert the screwdriver into the square hole.
Insert it along the top of the square hole to insert it smoothly.

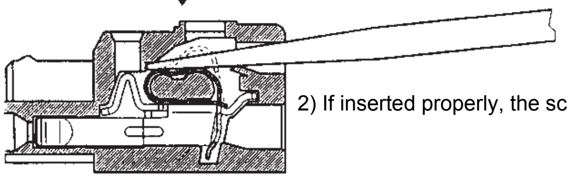

2) If inserted properly, the screwdriver is held.

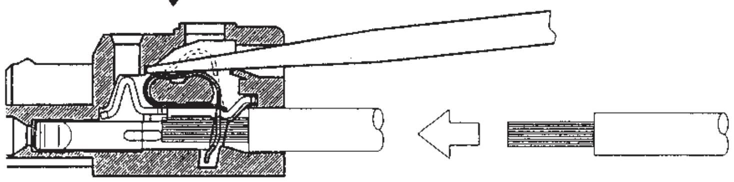

3) With the screwdriver held, insert the cable in the direction of arrow. (Insert the cable as far as it will go.)

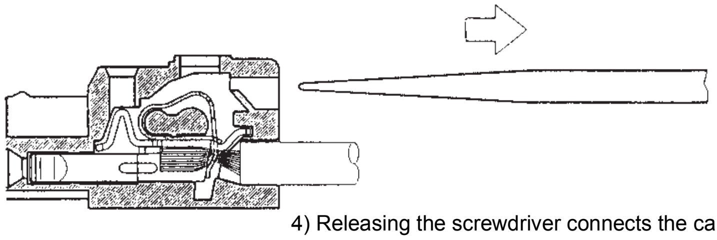

4) Releasing the screwdriver connects the cable.

3) When using the flat-blade screwdriver - part 2

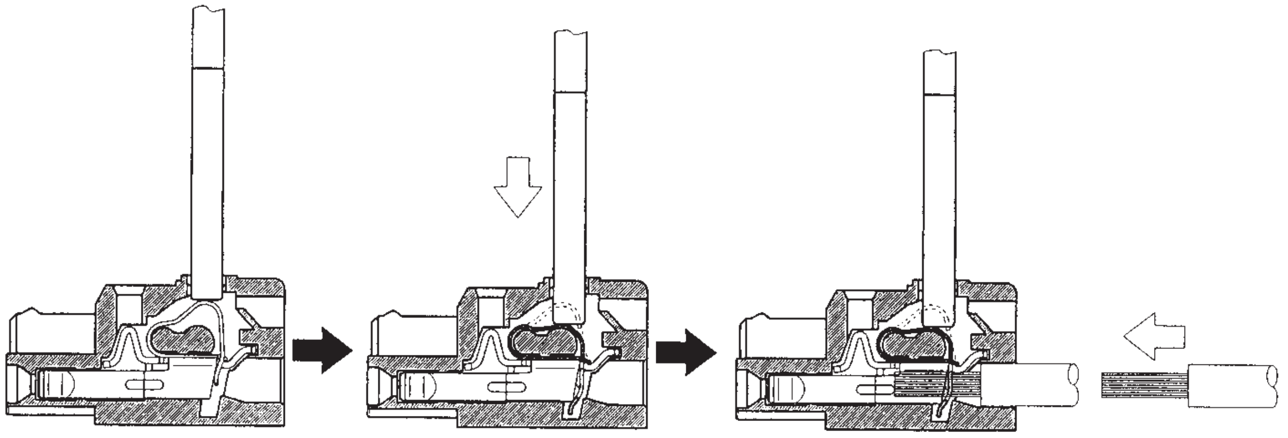

1) Insert the screwdriver into the square window at top of the connector.

2) Push the screwdriver in the direction of arrow.

3) With the screwdriver pushed, insert the cable in the direction of arrow. (Insert the cable as far as it will go.)

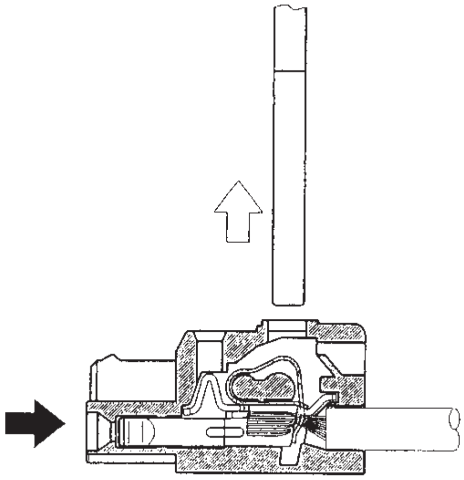

4) Releasing the screwdriver connects the cable.

(5) How to insert the cable into Phoenix Contact connector

POINT

- Do not use a precision driver because the cable cannot be tightened with enough torque.

Insertion of cables into Phoenix Contact connector PC4/6-STF-7.62-CRWH or PC4/3-STF-7.62-CRWH is shown as follows.

Before inserting the cable into the opening, make sure that the screw of the terminal is fully loose. Insert the core of the cable into the opening and tighten the screw with a flat-blade screwdriver. When the cable is not tightened enough to the connector, the cable or connector may generate heat because of the poor contact. (When using a cable of 1.5mm^2 or less, two cables may be inserted into one opening.)

Secure the connector to the servo amplifier by tightening the connector screw.

For securing the cable and the connector, use a flat-blade driver with 0.6mm blade edge thickness and 3.5mm diameter (Recommended flat-blade screwdriver: Phoenix Contact SZS 0.6×3.5). Apply 0.5 to 0.6 N・m torque to screw.

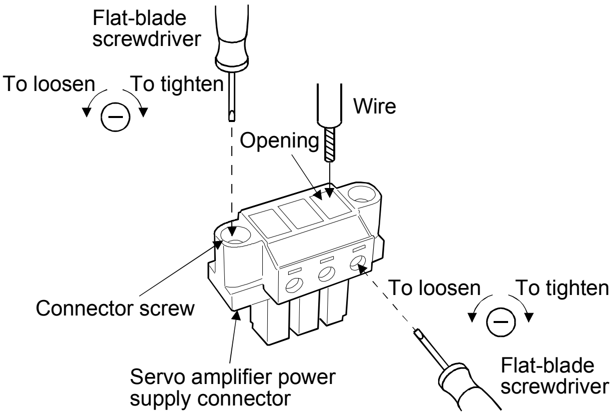

[Unit: mm]

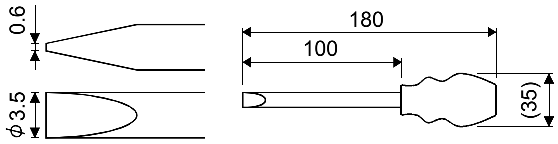

Recommended flat-blade screwdriver dimensions

4.4 Connectors and signal arrangements

POINT

- The pin configurations of the connectors are as viewed from the cable connector wiring section.

The servo amplifier front view shown is that of the MR-J3-20T or less. Refer to chapter 12 Outline Drawings for the appearances and connector layouts of the other servo amplifiers.

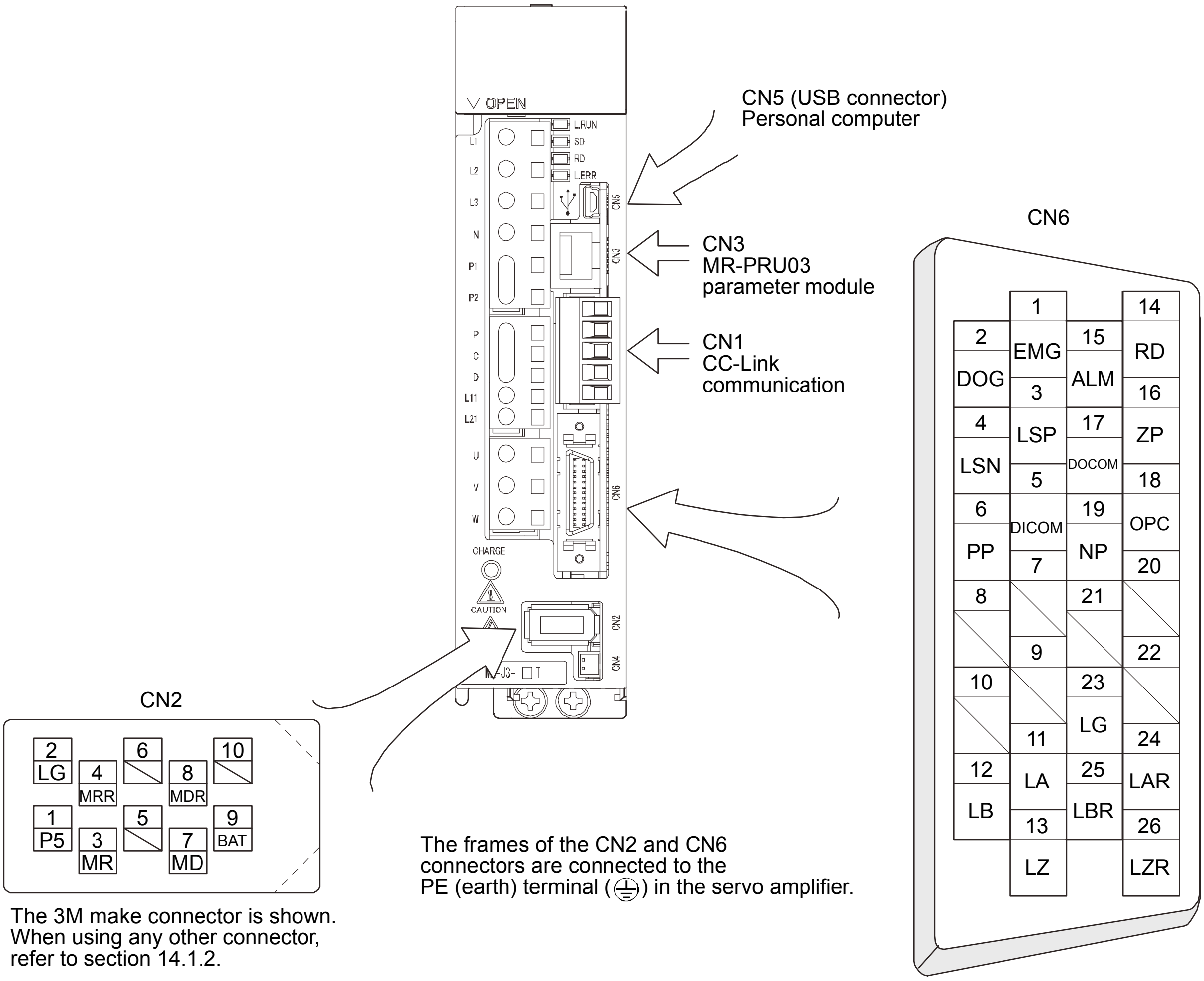

The 3M make connector is shown.
When using any other connector,
refer to section 14.1.2.

The frames of the CN2 and CN6 connectors are connected to the PE (earth) terminal (⏚) in the servo amplifier.

4.5 Signal (device) explanation

4.5.1 I/O devices

The CN6 connector provides three pins for inputs and three other pins for outputs. Devices assigned to these pins are changeable. To make this change, configure parameter settings of Nos. PD06 to PD11, PD12, and PD14. Refer to section 4.8.2 for the I/O interfaces (symbols in the I/O Division field in the table) of the corresponding connector pins.

Pin type	CN6 connector pin No.	I/O division	Device in initial status	Parameter of change target device
Input-only pins	1	DI-1	Forced stop (EMG)	
	2		Proximity dog (DOG)	No.PD06
	3		Forward rotation stroke end (LSP)	No.PD07
	4		Reverse rotation stroke end (LSN)	No.PD08
Output-only pins	14	DO-1	Ready (RD)	No.PD09
	15		Malfunction (ALM)	No.PD10
	16		Home position return completion (ZP)	No.PD11

(1) Input device

POINT

- Input devices assigned to the CN6 connector pins cannot be used with the RY of CC-Link.

Device	Symbol	Connector pin No.	Functions/Applications
Forced stop	EMG	CN6-1	Forced stop (EMG) is fixed at CN6-1. Assigning this device to any other pin is not allowed. For device details, refer to section 3.5.2 (1).
Servo-on	SON		For device details, refer to section 3.5.2 (1).
Forward rotation start	ST1		
Reverse rotation start	ST2		
Proximity dog	DOG	CN6-2 (Note)	
Forward rotation stroke end	LSP	CN6-3 (Note)	
Reverse rotation stroke end	LSN	CN6-4 (Note)	
Automatic/manual selection	MD0		
Temporary stop/Restart	TSTP		
Internal torque limit selection	TL1		
Proportion control	PC		
Gain switching	CDP		
Reset	RES		
Clear	CR		Turn CR on to clear the position control counter droop pulses on its leading edge. The pulse width should be 10ms or more. When the parameter No.PD22 setting is "☐ ☐ ☐ 1", the pulses are always cleared while CR is on.
Manual pulse generator multiplication 1	TP0		Used to select the multiplication factor of the manual pulse generator. When it is not selected, the parameter No.PA05 setting is made valid.
Manual pulse generator multiplication 2	TP1		

(Note) Input device		Manual pulse generator multiplication factor
TP1	TP0	
0	0	Parameter No.PA05 setting
0	1	1 time
1	0	10 times
1	1	100 times

Note. 0: OFF
1: ON

Note. These are pin Nos. assigned at default.

(2) Output device

POINT

- Output devices assigned to the CN6 connector pins can be used with RX of CC-Link.

Device	Symbol	Connector pin No.	Functions/Applications
Ready	RD	CN6-14 (Note)	For device details, refer to section 3.5.2 (2).
Malfunction	ALM	CN6-15 (Note)	ALM turns off when the power is switched off or the protective circuit is activated to shut off the base circuit. Without alarm occurring, ALM turns on in about 1.5s after power-on. The logic is opposite to RX(n＋1)A or RX(n＋3)A.
Home position return completion	ZP	CN6-16 (Note)	For device details, refer to section 3.5.2 (2).
In position	INP		
Rough match	CPO		
Limiting torque	TLC		
Electromagnetic brake interlock	MBR		
Temporary stop	PUS		
Warning	WNG		
Battery warning	BWNG		
Movement completion	MEND		
dynamic brake interlock	DB		DB turns off when the dynamic brake needs to operate. When using an external dynamic brake with the servo amplifier of 11kW or more, this device is required. (Refer to section 14.6.) The logic is opposite to RXnD. For the servo amplifier of 7kW or less, it is not necessary to use this device.
Position range	POT		For details of the device, refer to section 3.5.2 (2).
Point table No. output 1	PT0		
Point table No. output 2	PT1		
Point table No. output 3	PT2		
Point table No. output 4	PT3		
Point table No. output 5	PT4		
Point table No. output 6	PT5		
Point table No. output 7	PT6		
Point table No. output 8	PT7		
Speed command reached	SA		SA turns on when servo-on (SON) is on and the commanded speed is at the target speed. SA always turns on when servo-on (SON) is on and the commanded speed is 0r/min. SA turns off when servo-on (SON) is off or the commanded speed is in acceleration/deceleration.

Device	Symbol	Connector pin No.	Functions/Applications
Zero speed	ZSP		ZSP turns on when the servo motor speed is zero speed (50r/min) or less. Zero speed can be changed using parameter No.PC17. Example Zero speed is 50r/min 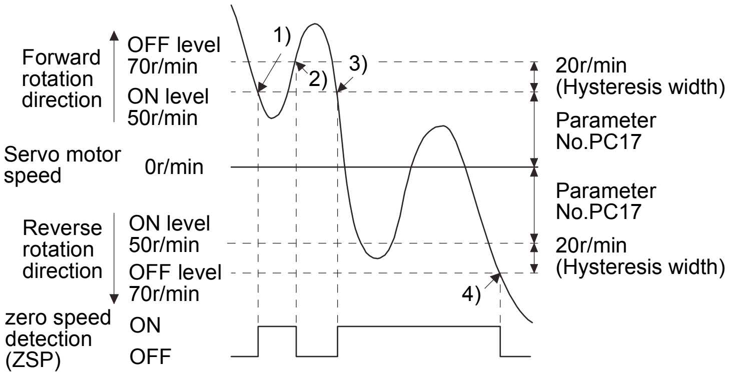 ZSP turns on 1) when the servo motor is decelerated to 50r/min, and ZSP turns off 2) when the servo motor is accelerated to 70r/min again. ZSP turns on 3) when the servo motor is decelerated again to 50r/min, and turns off 4) when the servo motor speed has reached -70r/min. The range from the point when the servo motor speed has reached ON level, and ZSP turns on, to the point when it is accelerated again and has reached OFF level is called hysteresis width. Hysteresis width is 20r/min for this servo amplifier.
Variable gain selection	CDPS		CDPS is on during gain switching.

Note. These are pin Nos. assigned at default.

4.5.2 Input signals

Device	Symbol	Connector pin No.	Functions/Applications
Manual pulse generator	PP	CN6-6	Used to connect the manual pulse generator (MR-HDP01). (Refer to section 14.18.)
	NP	CN6-19	

4.5.3 Output signals

Refer to section 4.8.2 for the output interfaces (symbols in the I/O Division field in the table) of the corresponding connector pins.

Signal	Symbol	Connector pin No.	Functions/Applications	I/O division
Encoder A-phase pulse (differential line driver)	LA LAR	CN6-11 CN6-24	Outputs pulses per servo motor revolution set in parameter No.PA15 in the differential line driver system. In CCW rotation of the servo motor, the encoder B-phase pulse lags the encoder A-phase pulse by a phase angle of $\pi/2$. The relationships between rotation direction and phase difference of the A- and B-phase pulses can be changed using parameter No. PC19.	DO-2
Encoder B-phase pulse (differential line driver)	LB LBR	CN6-12 CN6-25		
Encoder Z-phase pulse (differential line driver)	LZ LZR	CN6-13 CN6-26	Outputs the zero-point signal of the encoder in the differential line driver system. One pulse is output per servo motor revolution. This signal turns on when the zero-point position is reached. (Negative logic) The minimum pulse width is about 400μs. For home position return using this pulse, set the creep speed to 100r/min. or less.	DO-2

4.5.4 Power supply

Signal	Symbol	Connector pin No.	Functions/Applications	I/O division
Digital I/F power supply input	DICOM	CN6-5	Used to input 24VDC (24VDC±10% 150mA) for I/O interface. The power supply capacity changes depending on the number of I/O interface points to be used. Connect the plus of 24VDC terminal external power supply for the sink interface.	
Digital I/F common	DOCOM	CN6-17	Common terminal for input signals such as DOG and EMG. Pins are connected internally. Separated from LG. Connect the plus of 24VDC terminal external power supply for the source interface.	
Open collector power input	OPC	CN6-18	When using the MR-HDP01 manual pulse generator, connect OPC and DICOMD, and supply OPC with the positive (＋) voltage of 24VDC.	
Control common	LG	CN6-23	Common terminal for the differential line driver of the encoder pulses (LA・LAR・LB・LBR・LZ・LZR).	
Shield	SD	Plate	Connect the external conductor of the shield cable.	

4.6 Detailed description of signals (devices)

4.6.1 Forward rotation start・reverse rotation start・temporary stop/restart

(1) A forward rotation start (RYn1) or a reverse rotation start (RYn2) should make the sequence which can be used after the main circuit has been established. These signals are invalid if it is switched on before the main circuit is established.
Normally, it is interlocked with the ready signal (RD).

(2) A start in the servo amplifier is made when a forward rotation start (RYn1) or a reverse rotation start (RYn2) changes from OFF to ON. The delay time of the servo amplifier's internal processing is max. 3ms. The delay time of other devices is max. 10ms.

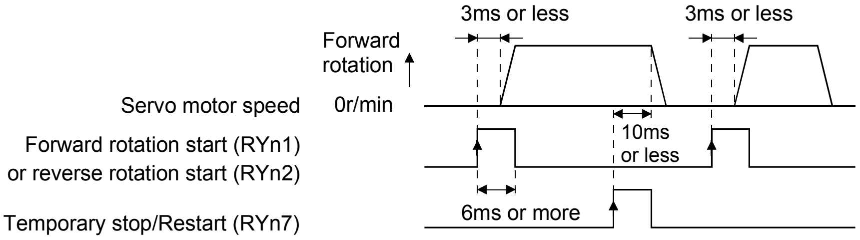

(3) When a programmable controller is used, the ON time of a forward rotation start (RYn1), a reverse rotation start (RYn2) or temporary start/stop (RYn7) signal should be 6ms or longer to prevent a malfunction.

(4) During operation, the forward rotation start (RYn1) or reverse rotation start (RYn2) is not accepted. The next operation should always be started after the rough match (RXn2) is output with the rough match output range set to “0” or after the movement completion (RXnC) is output.

4.6.2 Movement completion · rough match · in position

POINT

- If an alarm cause, etc. are removed and servo-on occurs after a stop is made by servo-off, alarm occurrence or Forced stop (EMG) ON during automatic operation, Movement completion (MEND), Rough-match, (CPO) and In position (INP) are turned on. To resume operation, confirm the current position and the selected point table No. for preventing unexpected operation.

(1) Movement completion

The following timing charts show the output timing relationships between the position command generated in the servo amplifier and the movement completion (RYnC). This timing can be changed using parameter No.PA10 (in-position range). RYnC turns ON in the servo-on status.

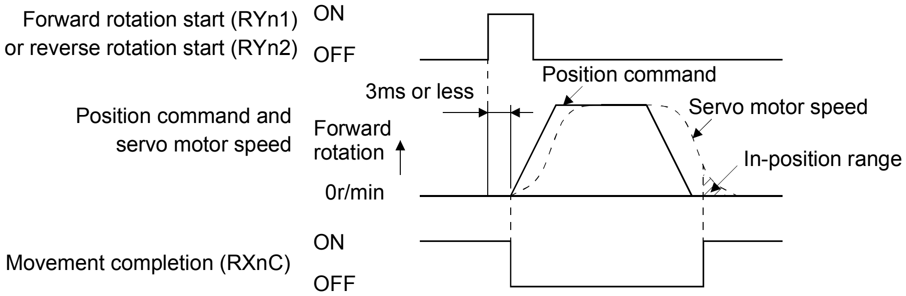

When parameter No.PA10 is small

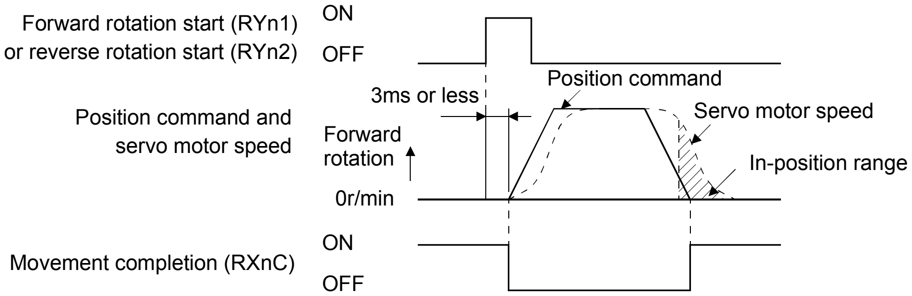

When parameter No.PA10 is large

(2) Rough match

The following timing charts show the relationships between the signal and the position command generated in the servo amplifier. This timing can be changed using parameter No.PC11 (rough match output range). RXn2 turns ON in the servo-on status.

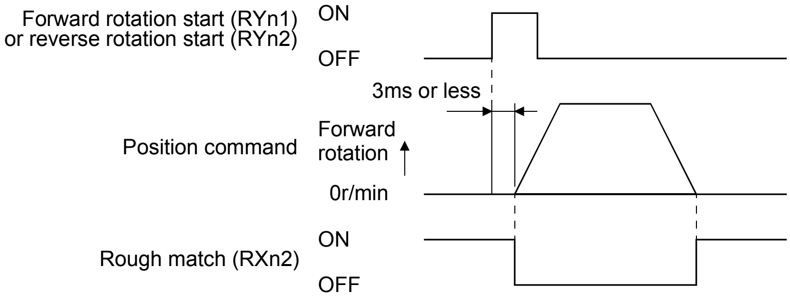

When "0" is set in parameter No.PC11

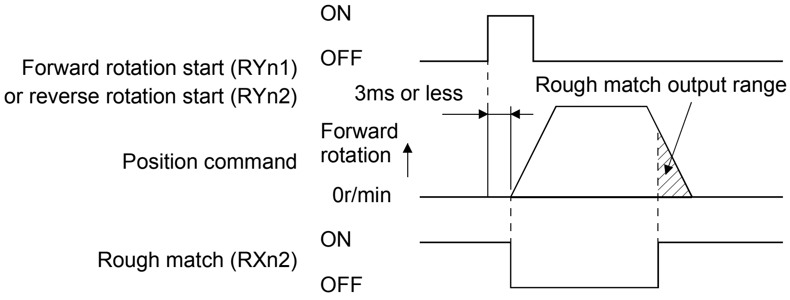

When more than "0" is set in parameter No.PC11

(3) In position

The following timing chart shows the relationship between the signal and the feedback pulse of the servo motor. This timing can be changed using parameter No.PA10 (in-position range). Turns on RYn1 in the servo-on status.

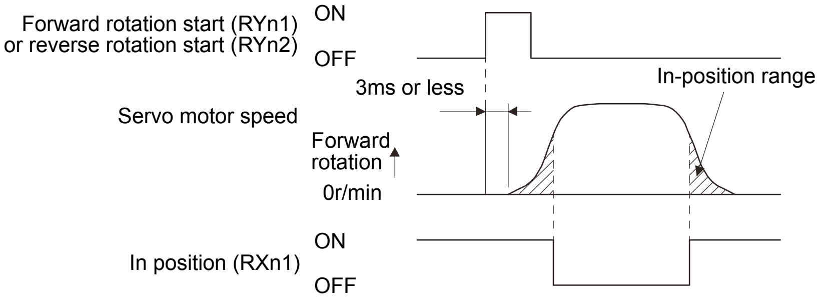

When positioning operation is performed once

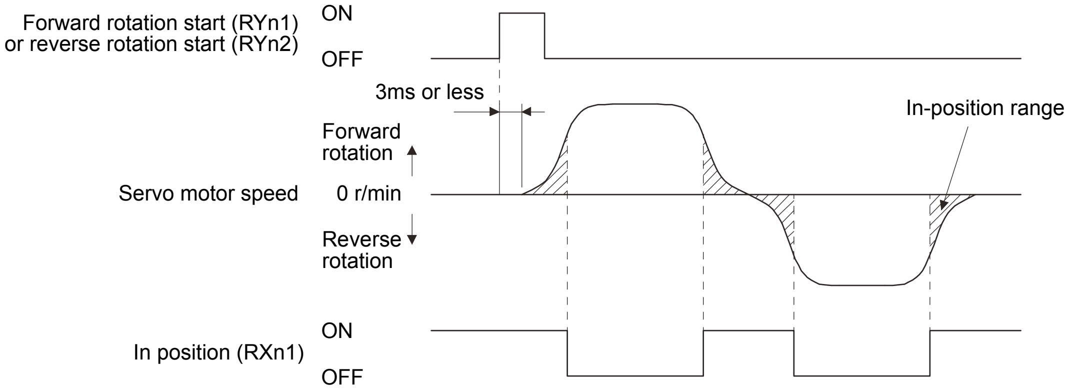

When servo motor reverses rotation direction during automatic continuous operation

4.6.3 Torque limit

CAUTION	・If the torque limit is canceled during servo lock, the servo motor may suddenly rotate according to position deviation in respect to the command position.

(1) Torque limit and torque

By setting parameter No.PA11 (forward rotation torque limit) or parameter No.PA12 (reverse rotation torque limit), torque is always limited to the maximum value during operation. A relationship between the limit value and servo motor torque is shown below.

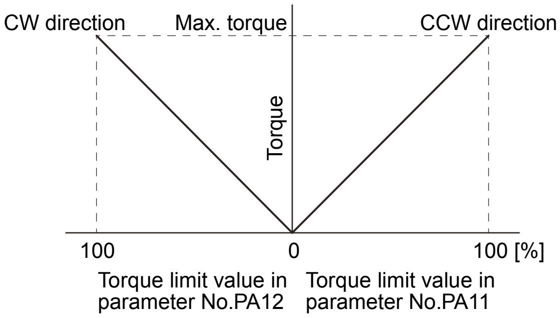

(2) Torque limit value selection

As shown below, the forward rotation torque limit (parameter No.PA11), reverse rotation torque limit (parameter No.PA12) or internal torque limit 2 (parameter No.PC35) can be chosen using the external torque limit selection (RY(n＋2)6).

(Note) RY(n＋2) 6	Limit value status	Torque limit to be enabled	
		CCW driving/CW regeneration	CW driving/CCW regeneration
0		Parameter No.PA11	Parameter No.PA12
1	Parameter No.PC35 ＞ Parameter No.PA11 Parameter No.PA12	Parameter No.PA11	Parameter No.PA12
	Parameter No.PC35 ＜ Parameter No.PA11 Parameter No.PA12	Parameter No.PC35	Parameter No.PC35

Note. 0: OFF
1: ON

(3) Limiting torque (RXn4)

RXn4 turns on when the servo motor torque reaches the torque limited.

4.7 Alarm occurrence timing chart

CAUTION	・When an alarm has occurred, remove its cause, make sure that the operation signal is not being input, ensure safety, and reset the alarm before restarting operation. ・As soon as an alarm occurs, turn off Servo-on (RYn0) and power off.

When an alarm occurs in the servo amplifier, the base circuit is shut off and the servo motor is coated to a stop. Switch off the main circuit power supply in the external sequence. To reset the alarm, switch the control circuit power supply from off to on, press the "SET" button on the current alarm screen, or turn the reset (RY(n+1)A or RY(n+3)A) from off to on. However, the alarm cannot be reset unless its cause is removed.

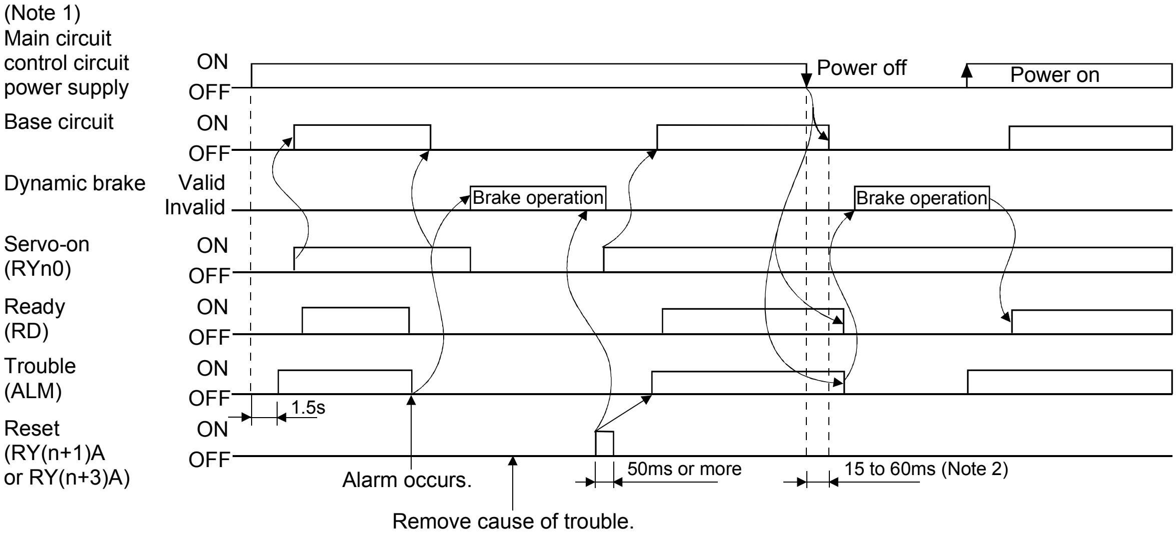

Note 1. Shut off the main circuit power as soon as an alarm occurs.

2. Changes depending on the operating status.

(1) Overcurrent, overload 1 or overload 2

If operation is repeated by switching control circuit power off, then on to reset the overcurrent (A32), overload 1 (A50) or overload 2 (A51) alarm after its occurrence, without removing its cause, the servo amplifier and servo motor may become faulty due to temperature rise. Securely remove the cause of the alarm and also allow about 30 minutes for cooling before resuming operation.

(2) Regenerative alarm

If operation is repeated by switching control circuit power off, then on to reset the regenerative (A30) alarm after its occurrence, the regenerative resistor will generate heat, resulting in an accident.

(3) Instantaneous power failure

Undervoltage (A10) occurs when the input power is in either of the following statuses.

- A power failure of the control circuit power supply continues for 60ms or longer and the control circuit is not completely off.
- The bus voltage dropped to 200VDC or less for the MR-J3-□T, to 158VDC or less for the MR-J3-□T1, or to 380VDC or less for the MR-J3-□T4.

(4) Incremental system

When an alarm occurs, the home position is lost. When resuming operation after deactivating the alarm, make a home position return.

4.8 Interface

4.8.1 Internal connection diagram

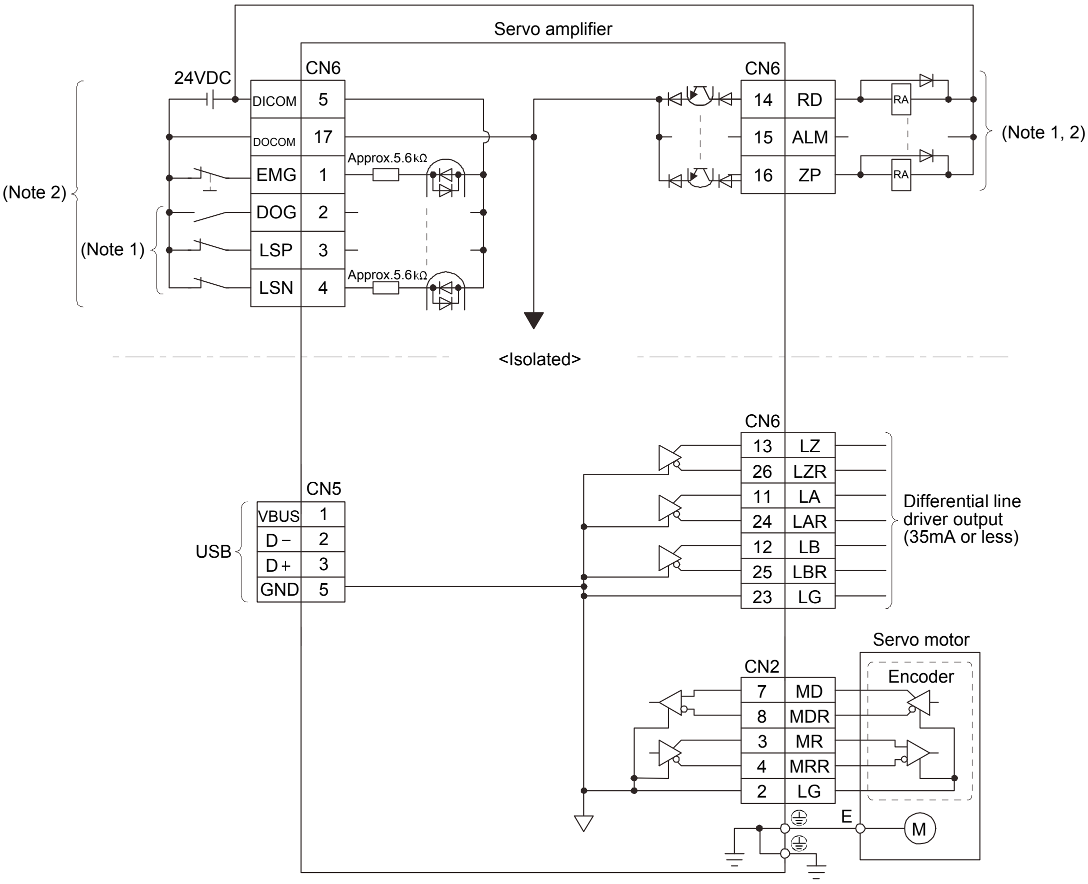

Note 1. Devices assigned to these pins can be changed in the parameter settings.

2. For this sink I/O interface. For the source I/O interface, refer to section 4.8.3.

4.8.2 Detailed description of interfaces

This section provides the details of the I/O signal interfaces (refer to the I/O division in the table) given in section 4.5.1. Refer to this section and make connection with the external equipment.

(1) Digital input interface DI-1

Give a signal with a relay or open collector transistor. Refer to section 4.8.3 for the source input.

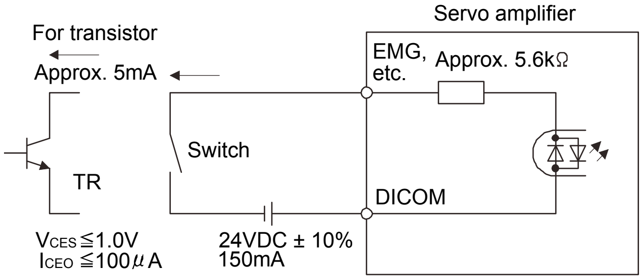

(2) Digital output interface DO-1

A lamp, relay or photocoupler can be driven. Install a diode (D) for an inductive load, or install an inrush current suppressing resistor (R) for a lamp load. (Rated current: 40mA or less, maximum current: 50mA or less, inrush current: 100mA or less) A maximum of 2.6V voltage drop occurs in the servo amplifier.

Refer to section 4.8.3 for the source output.

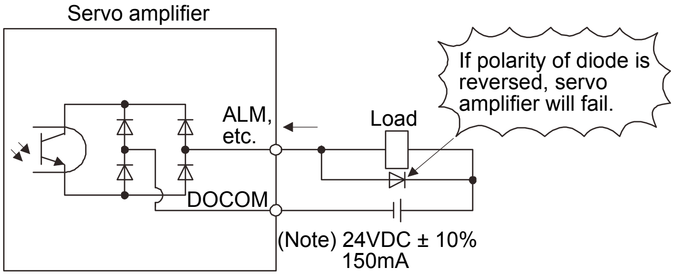

Note. If the voltage drop (maximum of 2.6V) interferes with the relay operation, apply high voltage (up to 26.4V) from external source.

(3) Encoder output pulse DO-2 (Differential line driver system)

(a) Interface

Max. output current: 35mA

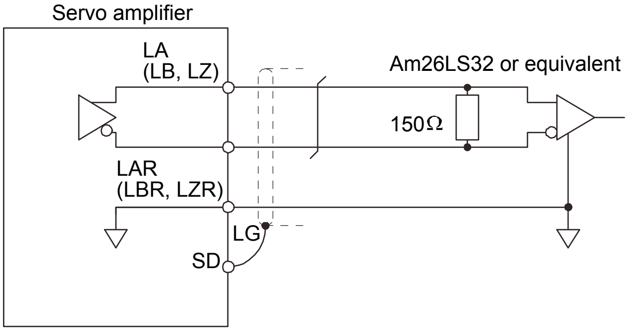

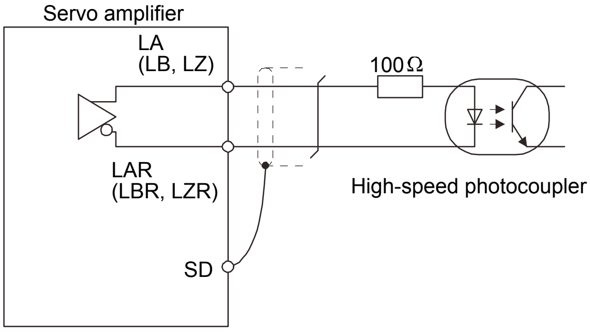

(b) Output pulse

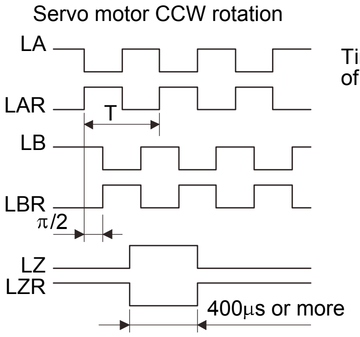

Time cycle (T) is determined by the settings of parameter No.PA15 and PC19.

4.8.3 Source I/O interfaces

In this servo amplifier, source type I/O interfaces can be used. In this case, all DI-1 input signals and DO-1 output signals are of source type. Perform wiring according to the following interfaces.

(1) Digital input interface DI-1

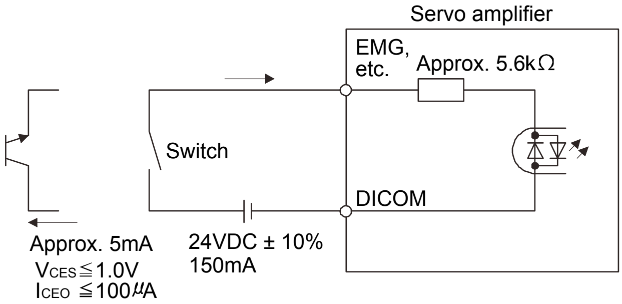

(2) Digital output interface DO-1

A maximum of 2.6V voltage drop occurs in the servo amplifier.

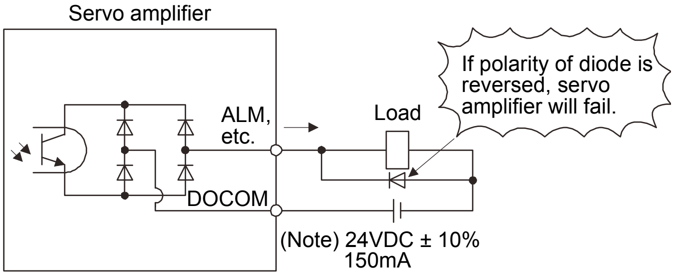

Note. If the voltage drop (maximum of 2.6V) interferes with the relay operation, apply high voltage (up to 26.4V) from external source.

4.9 Treatment of cable shield external conductor

In the case of the CN2 and CN6 connectors, securely connect the shielded external conductor of the cable to the ground plate as shown in this section and fix it to the connector shell.

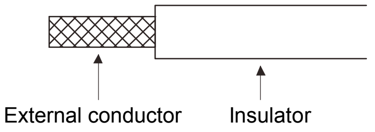

Strip the insulator.

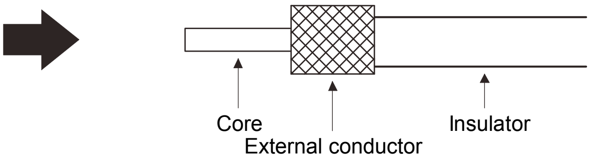

Pull back the external conductor to cover the insulator .

(1) For CN6 connector (3M connector)

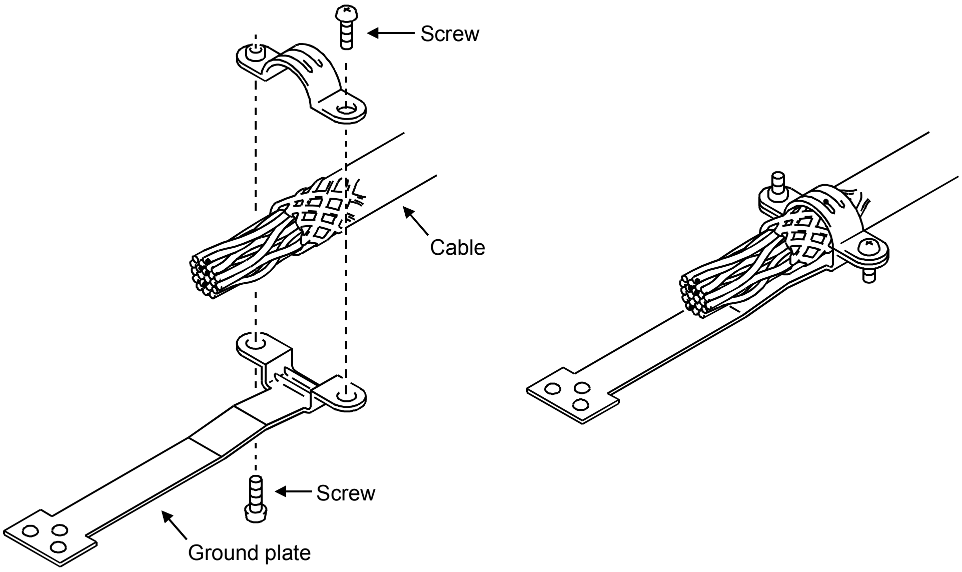

(2) For CN2 connector (3M or Molex connector)

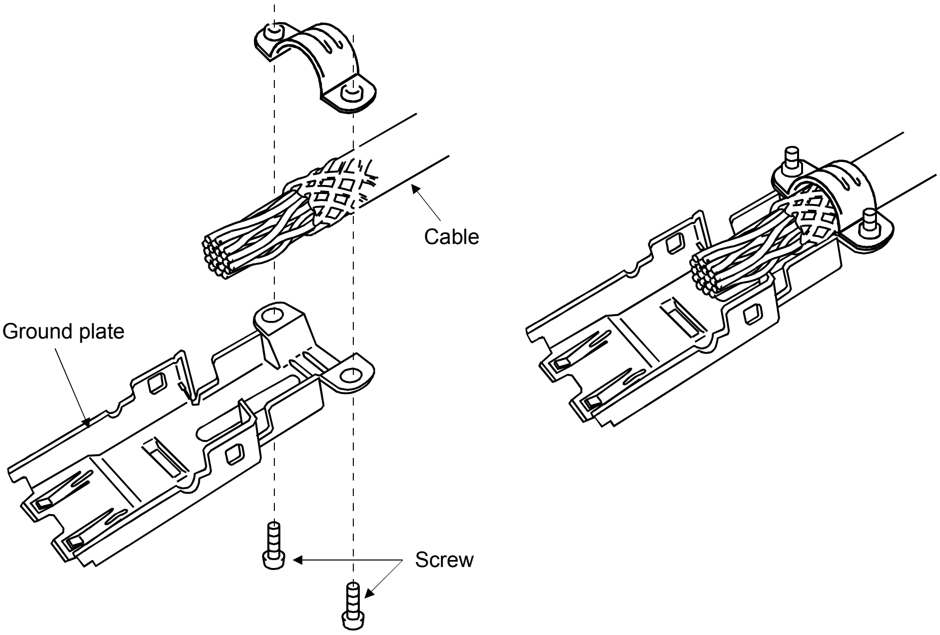

4.10 Connection of servo amplifier and servo motor

WARNING	· Connect the servo amplifier power output (U, V and W) to the servo motor power input (U, V and W) directly. Do not let a magnetic contactor, etc. intervene. Otherwise, a malfunction or fault may occur.

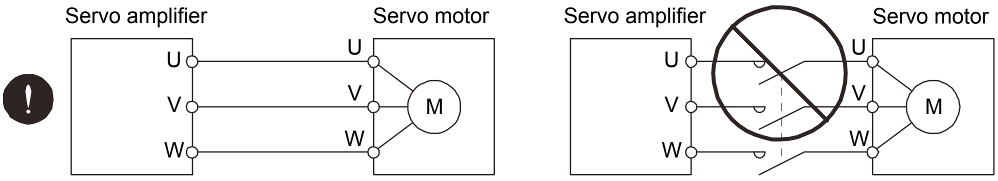

4.10.1 Connection instructions

WARNING	· To avoid an electric shock, insulate the connections of the power supply terminals.

CAUTION	· Connect the wires to the correct phase terminals (U, V, W) of the servo amplifier and servo motor. Not doing so may cause unexpected operation. · Do not connect AC power supply directly to the servo motor. Otherwise, a fault may occur.

POINT

- Refer to section 14.1 for the selection of the encoder cable.

This section indicates the connection of the servo motor power output (U, V, W). Use of the optional cable and connector set is recommended for connection between the servo amplifier and servo motor. When the options are not available, use the recommended products. Refer to section 14.1 for details of the options.

(1) For grounding, connect the earth cable of the servo motor to the protective earth (PE) terminal (⏚) of the servo amplifier and connect the ground cable of the servo amplifier to the earth via the protective earth of the control box. Do not connect them directly to the protective earth of the control panel.

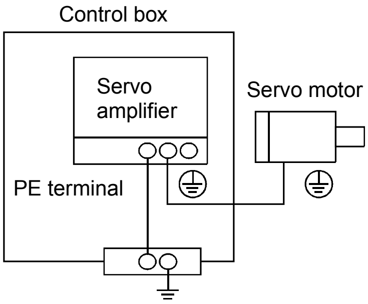

(2) Do not share the 24VDC interface power supply between the interface and electromagnetic brake. Always use the power supply designed exclusively for the electromagnetic brake.

4.10.2 Power supply cable wiring diagrams

(1) HF-MP series・HF-KP series servo motor

(a) When cable length is 10m or less

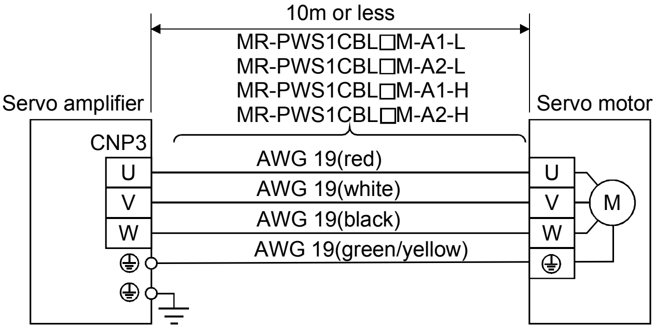

(b) When cable length exceeds 10m

When the cable length exceeds 10m, fabricate an extension cable as shown below. In this case, the motor power supply cable pulled from the servo motor should be within 2m long.

Refer to section 14.9 for the wire used for the extension cable.

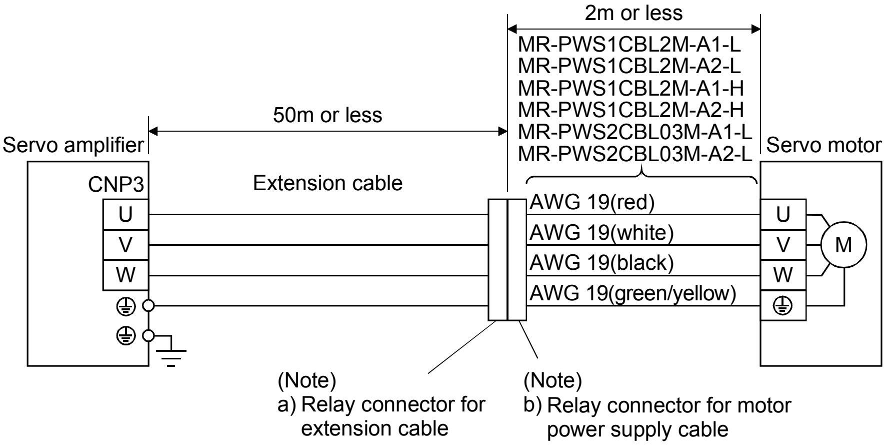

Note. Use of the following connectors is recommended when ingress protection (IP65) is necessary.

Relay connector	Description	IP rating
a) Relay connector for extension cable	Connector: RM15WTPZ-4P(71) Cord clamp: JR13WCC-5(72) (Hirose Electric) └ Numeral changes depending on the cable OD.	IP65
b) Relay connector for motor power supply cable	Connector: RM15WTJZ-4S(71) Cord clamp: JR13WCC-8(72) (Hirose Electric) └ Numeral changes depending on the cable OD.	IP65

(2) HF-SP series · HC-RP series · HC-UP series · HC-LP · HA-LP502 · 702 · HF-JP series servo motor

POINT

- Insert a contact in the direction shown in the figure. If inserted in the wrong direction, the contact will be damaged and fall off.

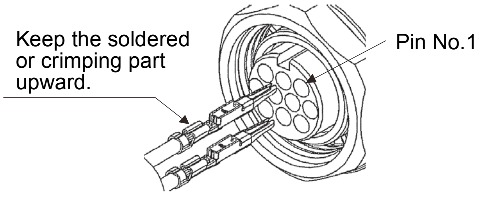

Model: CM10-SP10S-VP-M
CM10-AP10S-VP-M

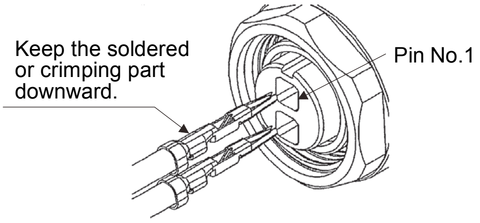

Model: CM10-SP2S-VP-☐
CM10-AP2S-VP-☐

(a) Wiring diagrams

Refer to section 14.9 for the wires used for wiring.

1) When the power supply connector and the electromagnetic brake connector are separately provided.

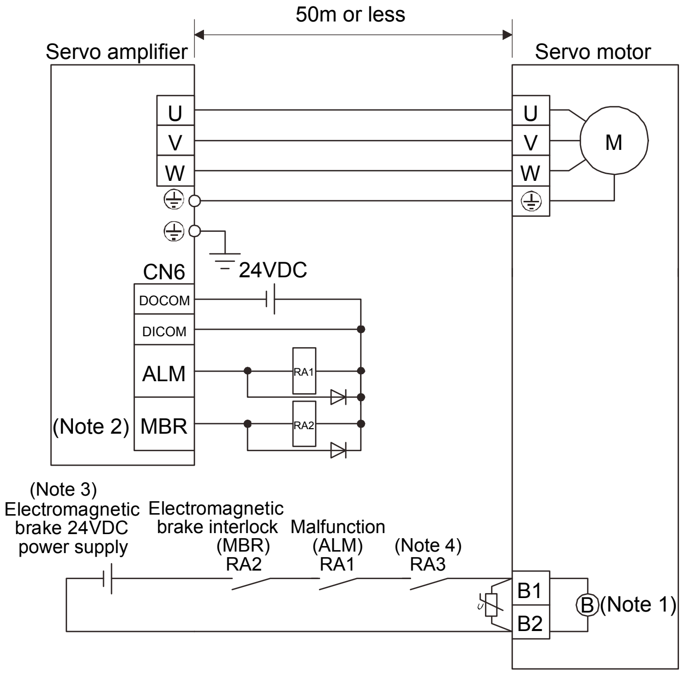

Note 1. There is no polarity in electromagnetic brake terminals B1 and B2.

2. When using a servo motor with an electromagnetic brake, assign the electromagnetic brake interlock (MBR) to an external output signal with parameters No.PD09 to PD11.

3. Do not use the 24VDC interface power supply for the electromagnetic brake.

4. Shut off the circuit by interlocking with the emergency stop switch.

2) When the power supply connector and the electromagnetic brake connector are shared.

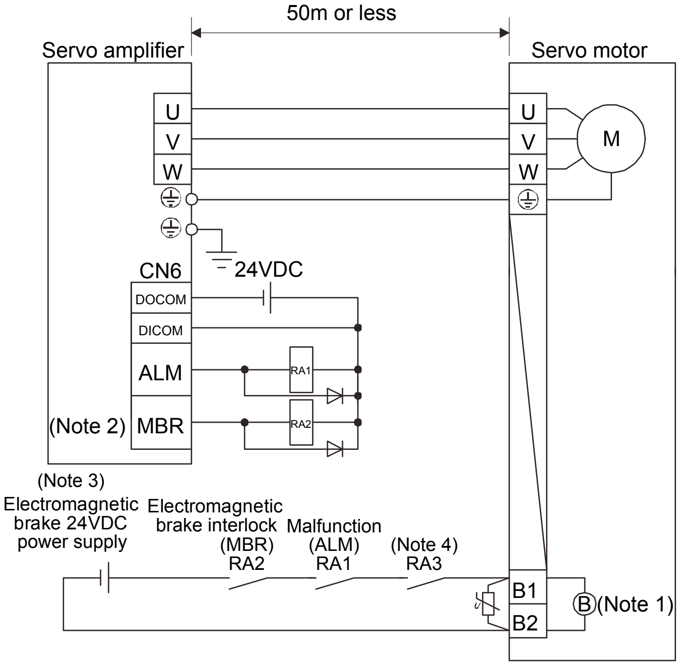

Note 1. There is no polarity in electromagnetic brake terminals B1 and B2.
2. When using a servo motor with an electromagnetic brake, assign the electromagnetic brake interlock (MBR) to an external output signal with parameters No.PD09 to PD11.
3. Do not use the 24VDC interface power supply for the electromagnetic brake.
4. Shut off the circuit by interlocking with the emergency stop switch.

(b) Connector and signal allotment

Connectors which connect to the servo motors are available as option. Refer to section 14.1. If selecting connectors other than listed as option, refer to chapter 3 in Servo Motor Instruction Manual (Vol.2).

Servo motor	Servo motor side connectors		
	Encoder	Power supply	Electromagnetic brake
HF-SP52(4) to 152(4)	CM10-R10P (DDK)	MS3102A18-10P	CM10-R2P (DDK)
HF-SP51 ・ 81			
HF-SP202(4) to 502(4)		MS3102A22-22P	
HF-SP121 to 301			
HF-SP421 ・ 702(4)		MS3102A32-17P	
HC-RP103 to 203		CE05-2A22-23PD-B	The connector for power is shared
HC-RP353 ・ 503		CE05-2A24-10PD-B	
HC-UP72 ・ 152		CE05-2A22-23PD-B	
HC-UP202 to 502		CE05-2A24-10PD-B	MS3102A10SL-4P
HC-LP52 to 152		CE05-2A22-23PD-B	The connector for power is shared
HC-LP202 ・ 302		CE05-2A24-10PD-B	MS3102A10SL-4P
HA-LP502		CE05-2A24-10PD-B	
HA-LP702		CE05-2A32-17PD-B	
HF-JP53(4) to 203(4), 3534, 5034		MS3102A18-10P	CM10-R2P (DDK)
HF-JP353, 503		MS3102A22-22P	
HF-JP703(4), 903(4)		MS3102A32-17P	
HF-JP11K1M(4), 15K1M(4)	MS3102A20-29P		MS3102A10SL-4P

Encoder connector signal assignment
CM10-R10P

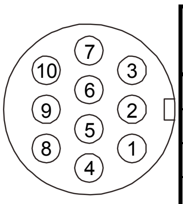

View a

Terminal No.	Signal
1	MR
2	MRR
3	
4	BAT
5	LG
6	
7	
8	P5
9	
10	SHD

Encoder connector signal assignment
MS3102A20-29P

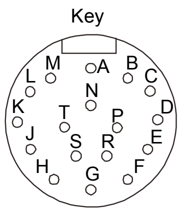

View a

Terminal No.	Signal
A	MD
B	MDR
C	MR
D	MRR
E	
F	BAT
G	
H	
J	
K	
L	
M	CONT
N	SHD
P	
R	LG
S	P5
T	

Power supply connector signal assignment
MS3102A18-10P
MS3102A22-22P
MS3102A32-17P
CE05-2A32-17PD-B

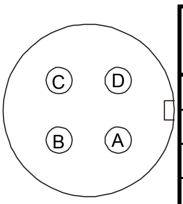

View b

Terminal No.	Signal
A	U
B	V
C	W
D	⏚ (earth)

Brake connector signal assignment
CE05-2A22-23PD-B

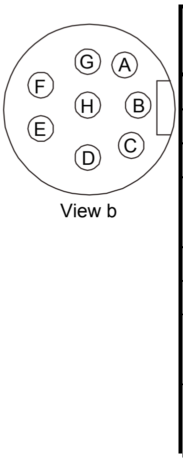

View b

Terminal No.	Signal
A	U
B	V
C	W
D	⏚ (earth)
E	
F	
G	B1 (Note)
H	B2 (Note)

Note. For the motor with an electromagnetic brake, supply electromagnetic brake power (24VDC). There is no polarity.

Power supply connector signal assignment
CE05-2A24-10PD-B

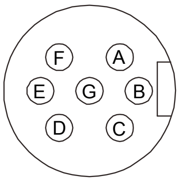

View b

Terminal No.	Signal
A	U
B	V
C	W
D	⏚ (earth)
E	B1 (Note)
F	B2 (Note)
G	

Note. For the motor with an electromagnetic brake, supply electromagnetic brake power (24VDC). There is no polarity.

Brake connector signal assignment
CM10-R2P

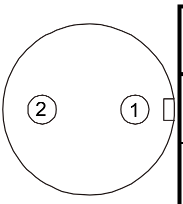

View c

Terminal No.	Signal
1	B1 (Note)
2	B2 (Note)

Note. Supply electromagnetic brake power (24VDC). There is no polarity.

Brake connector signal assignment

MS3102A10SL-4P

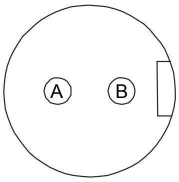

View c

Terminal No.	Signal
A	B1 (Note)
B	B2 (Note)

Note. For the motor with an electromagnetic brake, supply electromagnetic brake power (24VDC). There is no polarity.

(3) HA-LP series servo motor

POINT
・ Refer to (2) of this section for HA-LP502・702.

(a) Wiring diagrams

Refer to section 14.9 for the cables used for wiring.

1) 200V class

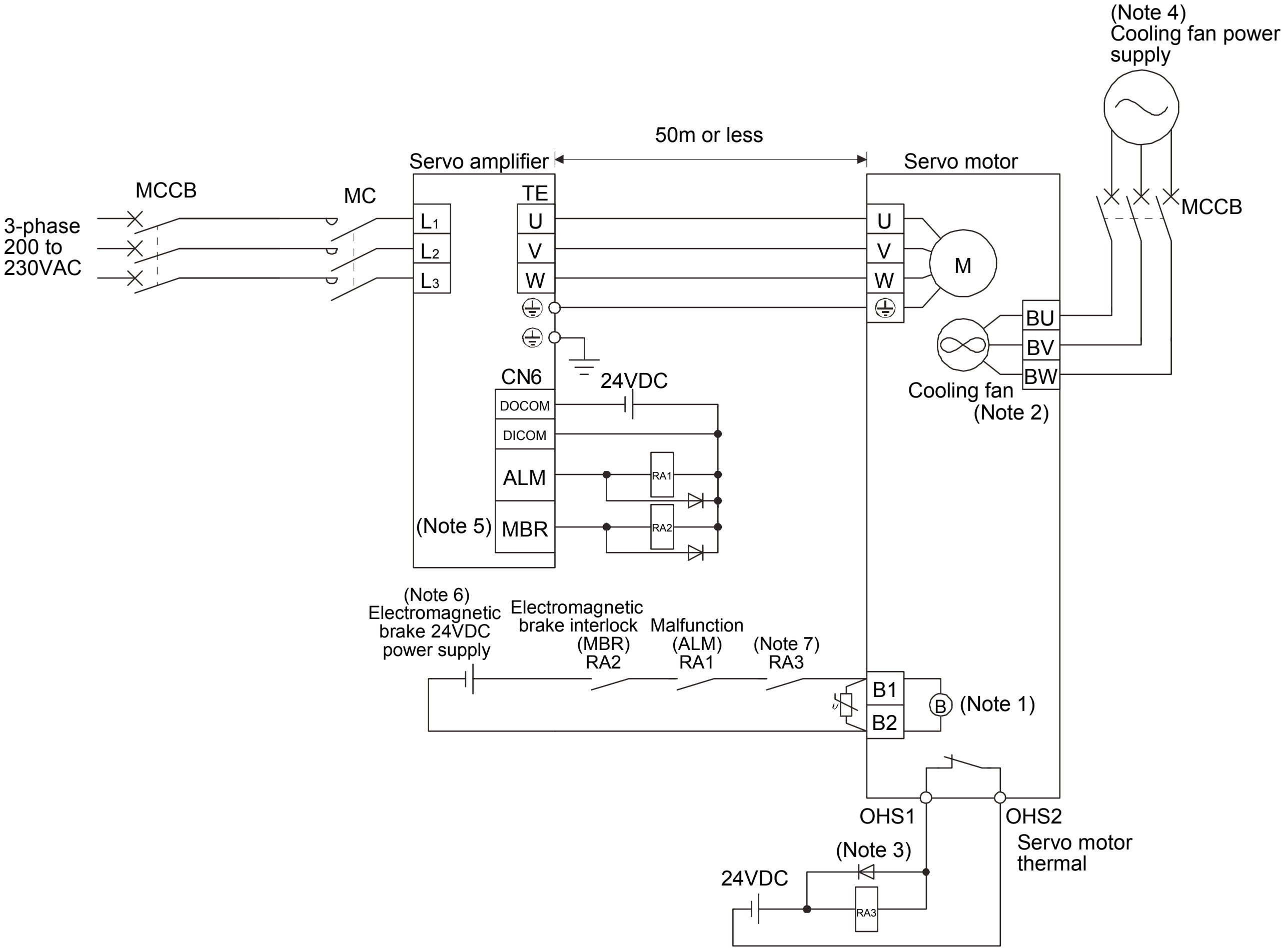

Note 1. There is no polarity in electromagnetic brake terminals B1 and B2.

2. BW is not available when a 1-phase power supply is used.

3. Configure the power supply circuit which turns off the magnetic contactor after detection of servo motor thermal.

4. For the cooling fan power supply, refer to (3) (b) of this section.

5. When using a servo motor with an electromagnetic brake, assign the electromagnetic brake interlock (MBR) to an external output signal with parameters No.PD09 to PD11.

6. Do not use the 24VDC interface power supply for the electromagnetic brake.

7. Shut off the circuit by interlocking with the emergency stop switch.

2) 400V class

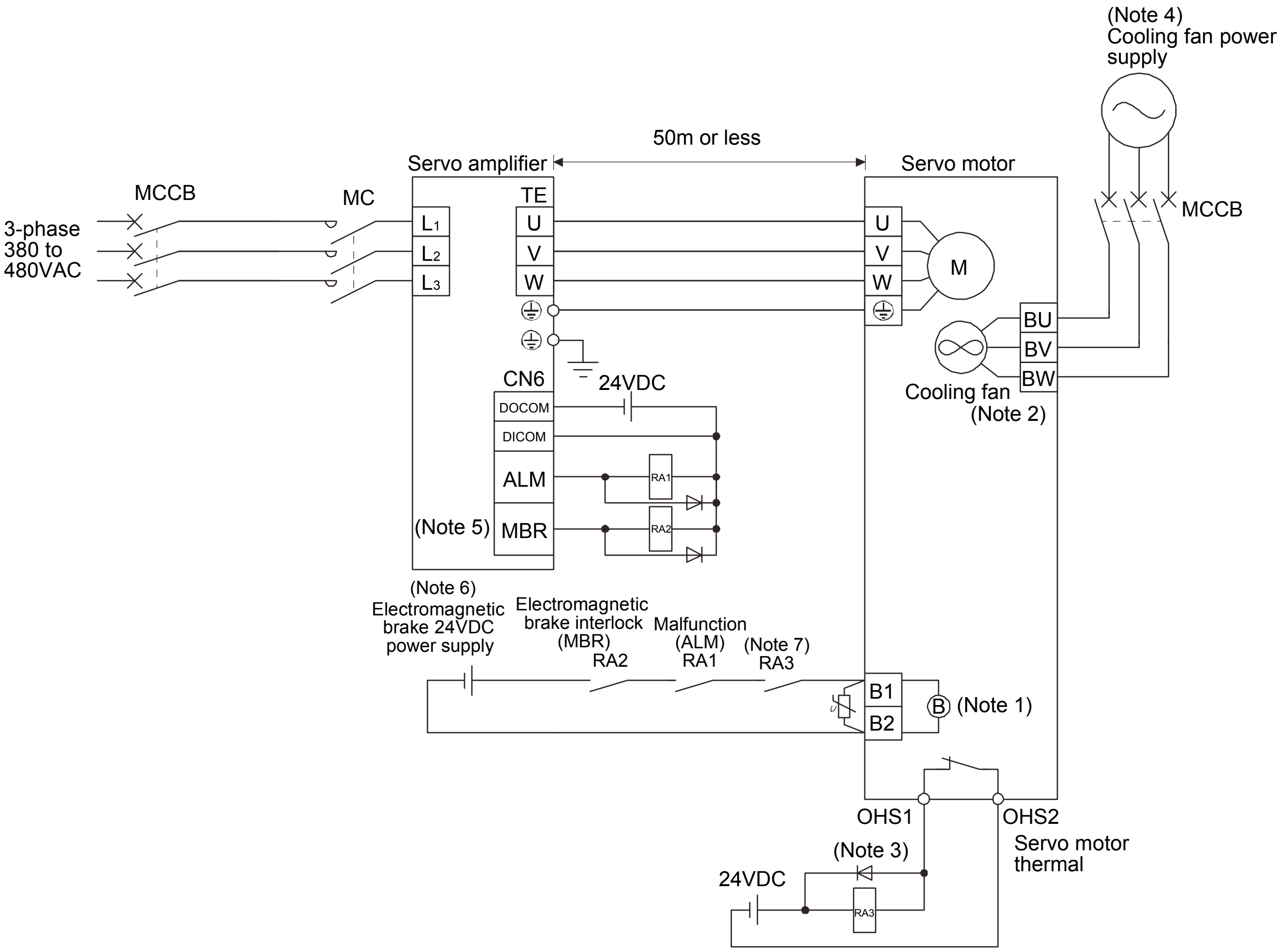

Note 1. There is no polarity in electromagnetic brake terminals B1 and B2.

2. BW is not available when a 1-phase power supply is used.

3. Configure the power supply circuit which turns off the magnetic contactor after detection of servo motor thermal.

4. For the cooling fan power supply, refer to (3) (b) in this section.

5. When using a servo motor with an electromagnetic brake, assign the electromagnetic brake interlock (MBR) to an external output signal with parameters No.PD09 to PD11.

6. Do not use the 24VDC interface power supply for the electromagnetic brake.

7. Shut off the circuit by interlocking with the emergency stop switch.

(b) Servo motor terminals

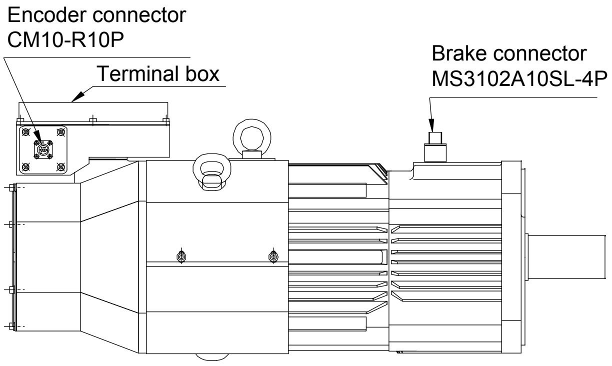

Encoder connector signal assignment
CM10-R10P

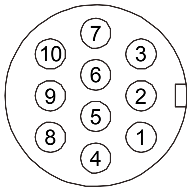

View a

Terminal No.	Signal
1	MR
2	MRR
3	
4	BAT
5	LG
6	
7	
8	P5
9	
10	SHD

Brake connector signal assignment
MS3102A10SL-4P

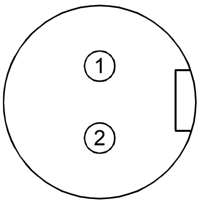

Terminal No.	Signal
1	B1 (Note)
2	B2 (Note)

Note. For the motor with an electromagnetic brake, supply electromagnetic brake power (24VDC). There is no polarity.

Inside the terminal box (HA-LP601(4) ・ 701M(4) ・ 11K2(4))

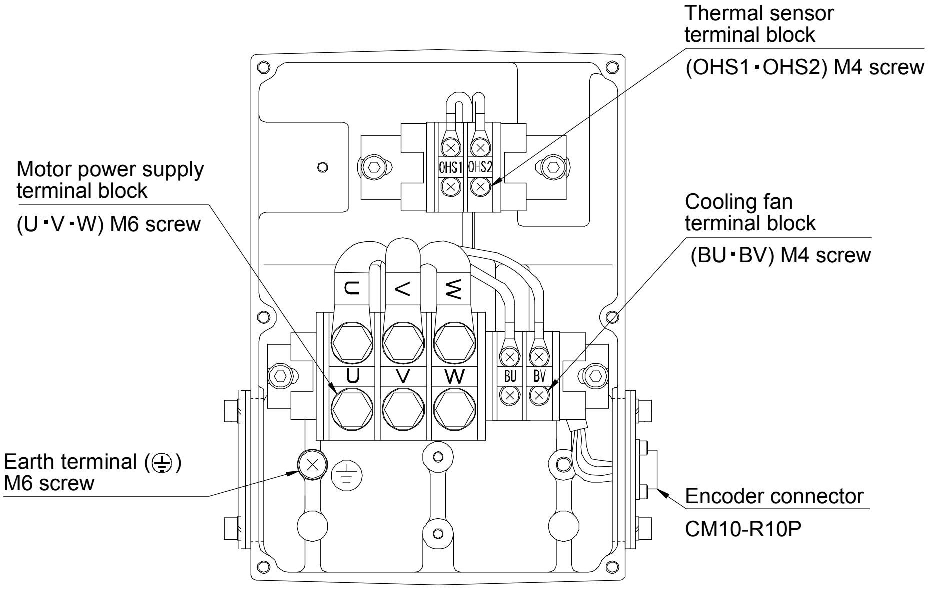

Terminal block signal arrangement

OHS1	OHS2

U	V	W	BU	BV

Inside the terminal box (HA-LP801(4) ・ 12K1(4) ・ 11K1M(4) ・ 15K1M(4) ・ 15K2(4) ・ 22K2(4))

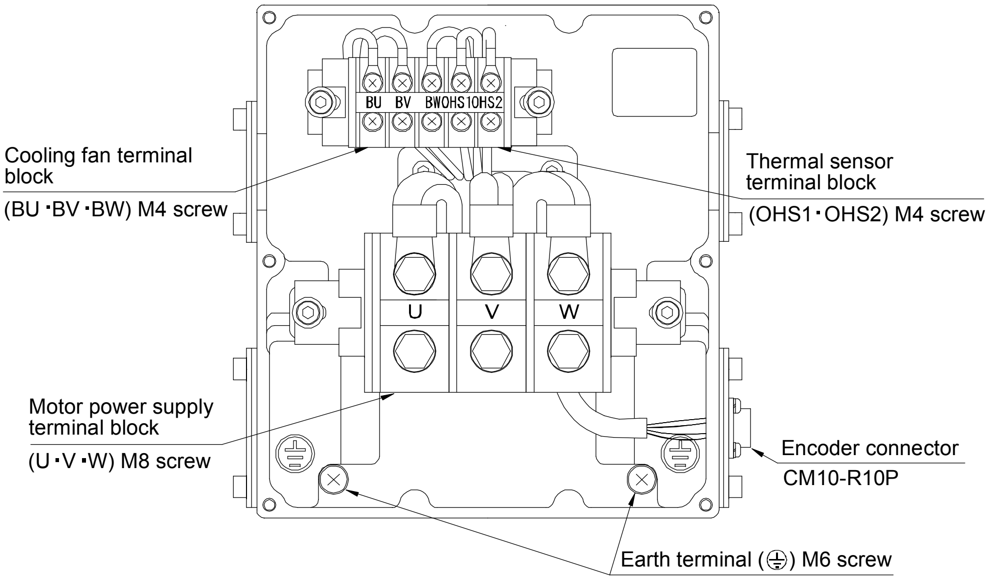

Terminal block signal arrangement

BU	BV	BW	OHS1	OHS2

U	V	W

Inside the terminal box (HA-LP15K1(4) ・ 20K1(4) ・ 22K1M(4))

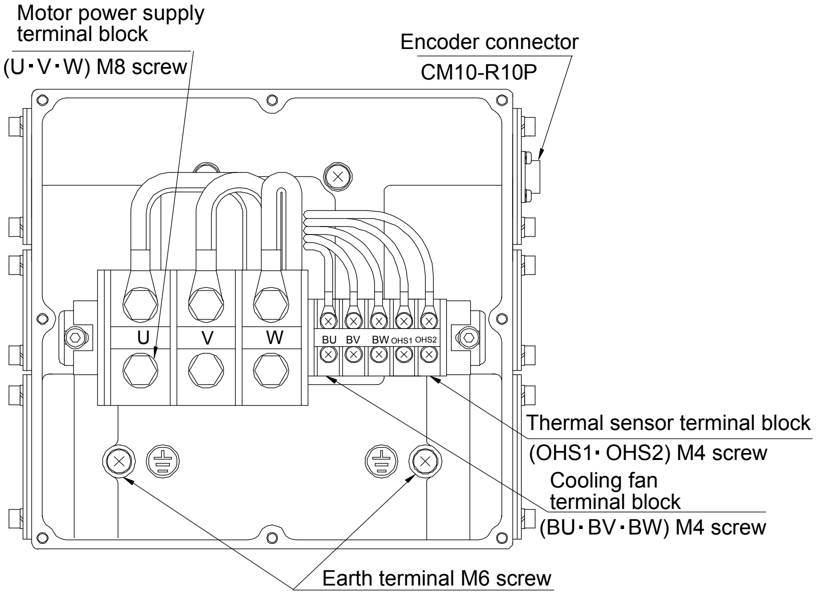

Terminal block signal arrangement

U	V	W	BU	BV	BW	OHS1	OHS2

Inside the terminal box (HA-LP25K1)

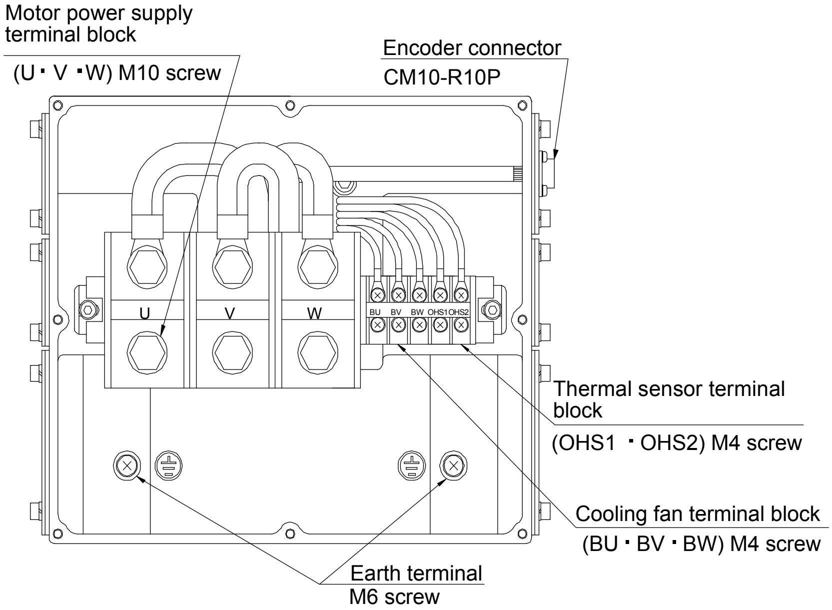

Terminal block signal arrangement

U	V	W	BU	BV	BW	OHS1	OHS2

<table>
<tr><th>Signal name</th><th>Abbreviation</th><th>Description</th></tr>
<tr><td>Power supply</td><td>U・V・W</td><td>Connect to the motor output terminals (U, V, W) of the servo amplifier. Connect the servo amplifier power output (U, V and W) to the servo motor power input (U, V and W) directly.
Do not let a magnetic contactor, etc. intervene. Otherwise, a malfunction or fault may occur.</td></tr>
<tr><td>Cooling fan</td><td>(Note)
BU・BV・BW</td><td>Supply power which satisfies the following specifications.
<table>
<tr><th>Servo motor</th><th>Voltage division</th><th>Voltage/ frequency</th><th>Power consumption [W]</th><th>Rated current [A]</th></tr>
<tr><td>HA-LP601, 701M, 11K2</td><td rowspan="4">200V class</td><td>1-phase 200 to 220VAC 50Hz
1-phase 200 to 230VAC 60Hz</td><td>42(50Hz)
54(60Hz)</td><td>0.21(50Hz)
0.25(60Hz)</td></tr>
<tr><td>HA-LP801, 12K1, 11K1M, 15K1M, 15K2, 22K2</td><td rowspan="3">3-phase 200 to 230VAC 50Hz/60Hz</td><td>62(50Hz)
76(60Hz)</td><td>0.18(50Hz)
0.17(60Hz)</td></tr>
<tr><td>HA-LP15K1, 20K1, 22K1M</td><td>65(50Hz)
85(60Hz)</td><td>0.20(50Hz)
0.22(60Hz)</td></tr>
<tr><td>HA-LP25K1</td><td>120(50Hz)
175(60Hz)</td><td>0.65(50Hz)
0.80(60Hz)</td></tr>
<tr><td>HA-LP6014, 701M4, 11K24</td><td rowspan="4">400V class</td><td>1-phase 200 to 220VAC 50Hz
1-phase 200 to 230VAC 60Hz</td><td>42(50Hz)
54(60hz)</td><td>0.21(50Hz)
0.25(60Hz)</td></tr>
<tr><td>HA-LP8014, 12K14, 11K1M4, 15K1M4, 15K24, 22K24</td><td>3-phase 380 to 440VAC 50Hz
3-phase 380 to 480VAC 60Hz</td><td>62(50Hz)
76(60Hz)</td><td>0.14(50Hz)
0.11(60Hz)</td></tr>
<tr><td>HA-LP15K14, 20K14, 22K1M4</td><td rowspan="2">3-phase 380 to 460VAC 50Hz
3-phase 380 to 480VAC 60Hz</td><td>65(50Hz)
85(60Hz)</td><td>0.12(50Hz)
0.14(60Hz)</td></tr>
<tr><td>HA-LP25K14</td><td>110(50Hz)
150(60Hz)</td><td>0.20(50Hz)
0.22(60Hz)</td></tr>
</table>
</td></tr>
<tr><td>Motor thermal relay</td><td>OHS1・OHS2</td><td>OHS1―OHS2 are opened when heat is generated to an abnormal temperature.
Maximum rating: 125VAC/DC, 3A or 250VAC/DC, 2A
Minimum rating: 6VAC/DC, 0.15A</td></tr>
<tr><td>Earth terminal</td><td>⏚</td><td>For grounding, connect to the grounding of the control box via the earth terminal of the servo amplifier.</td></tr>
</table>

Note. BW is not available when a 1-phase power supply is used.

4.11 Servo motor with an electromagnetic brake

4.11.1 Safety precautions

CAUTION

- Configure an electromagnetic brake circuit which is interlocked with an external emergency stop switch.

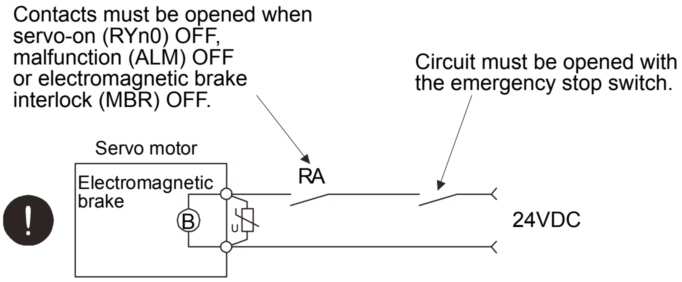

- The electromagnetic brake is provided for holding purpose and must not be used for ordinary braking.
- Before performing the operation, be sure to confirm that the electromagnetic brake operates properly.

POINT

- Refer to Servo Motor Instruction Manual (Vol.2) for specifications such as the power supply capacity and operation delay time of the electromagnetic brake.
- Refer to Servo Motor Instruction Manual (Vol.2) for the selection of a surge absorber for the electromagnetic brake.

Note the following when the servo motor equipped with an electromagnetic brake is used.

1) Do not share the 24VDC interface power supply between the interface and electromagnetic brake. Always use the power supply designed exclusively for the electromagnetic brake.
2) The brake will operate when the power (24VDC) switches off.
3) Switch off the servo-on (RYn0) after the servo motor has stopped.

Using parameter No.PC16 (electromagnetic brake sequence output), set a time delay (Tb) at servo-off from electromagnetic brake operation to base circuit shut-off as in the timing chart shown in section 4.11.2 in this section.

4.11.2 Timing charts

(1) Servo-on (RYn0) command (from controller) ON/OFF

Tb [ms] after the servo-on (RYn0) is switched off, the servo lock is released and the servo motor coasts. If the electromagnetic brake is made valid in the servo lock status, the brake life may be shorter. Therefore, when using the electromagnetic brake in a vertical lift application or the like, set Tb to about the same as the electromagnetic brake operation delay time to prevent a drop.

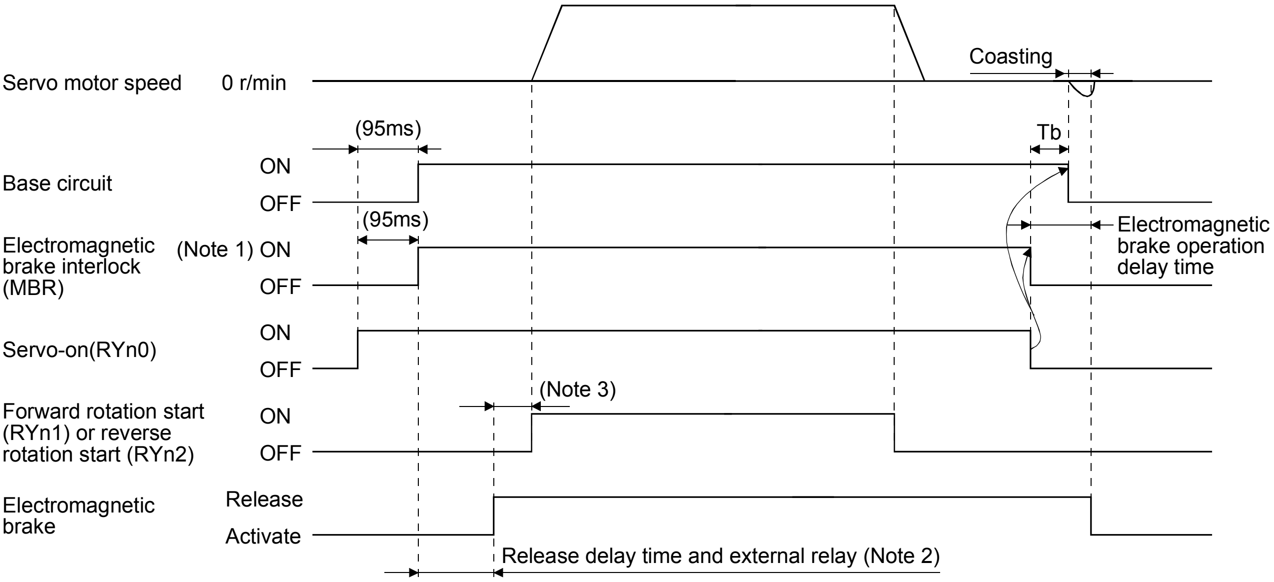

Note 1. ON: Electromagnetic brake is not activated.
OFF: Electromagnetic brake is activated.
2. Electromagnetic brake is released after delaying for the release delay time of electromagnetic brake and operation time of external circuit relay. For the release delay time of electromagnetic brake, refer to Servo Motor Instruction Manual (Vol.2).
3. After the electromagnetic brake is released, turn ON the RYn1 or RYn2.

(2) Forced stop (EMG) ON/OFF

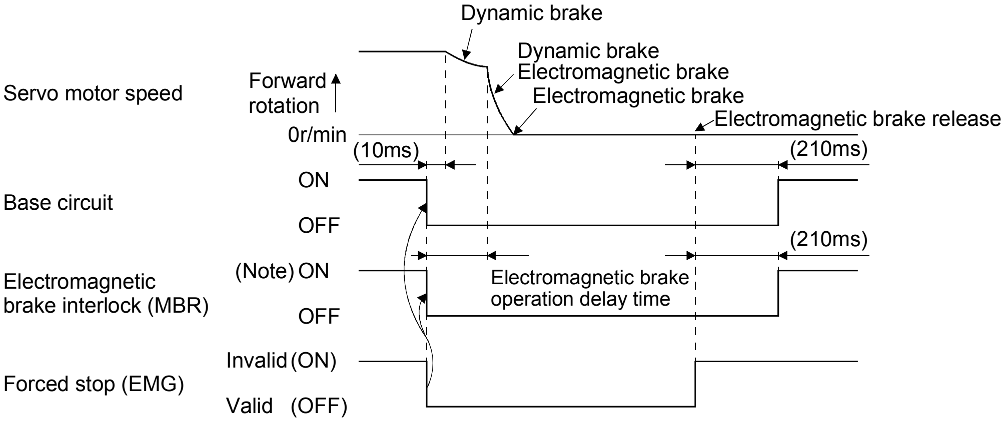

Note. ON: Electromagnetic brake is not activated.
OFF: Electromagnetic brake is activated.

(3) Alarm occurrence

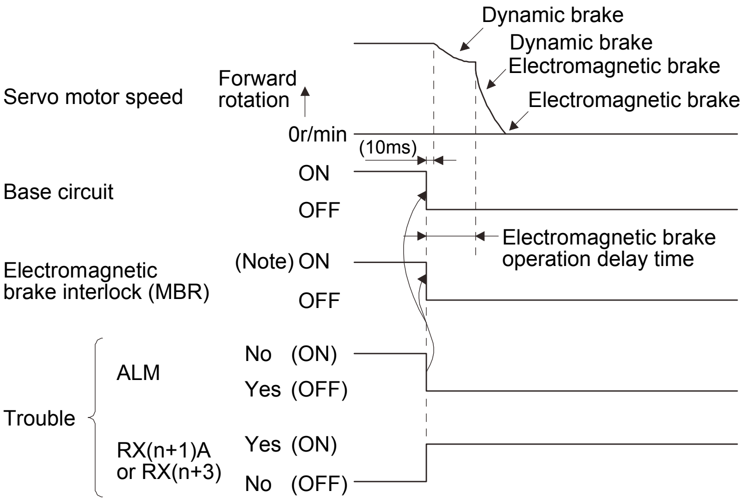

Note. ON: Electromagnetic brake is not activated.
OFF: Electromagnetic brake is activated.

(4) Both main and control circuit power supplies off

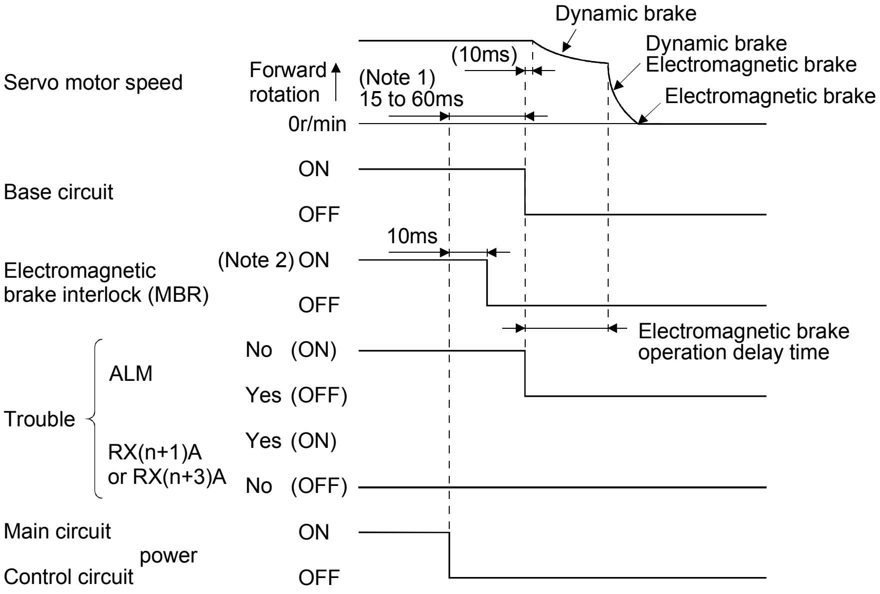

Note 1. Changes with the operating status.
2. ON: Electromagnetic brake is not activated.
OFF: Electromagnetic brake is activated.

(5) Only main circuit power supply off (control circuit power supply remains on)

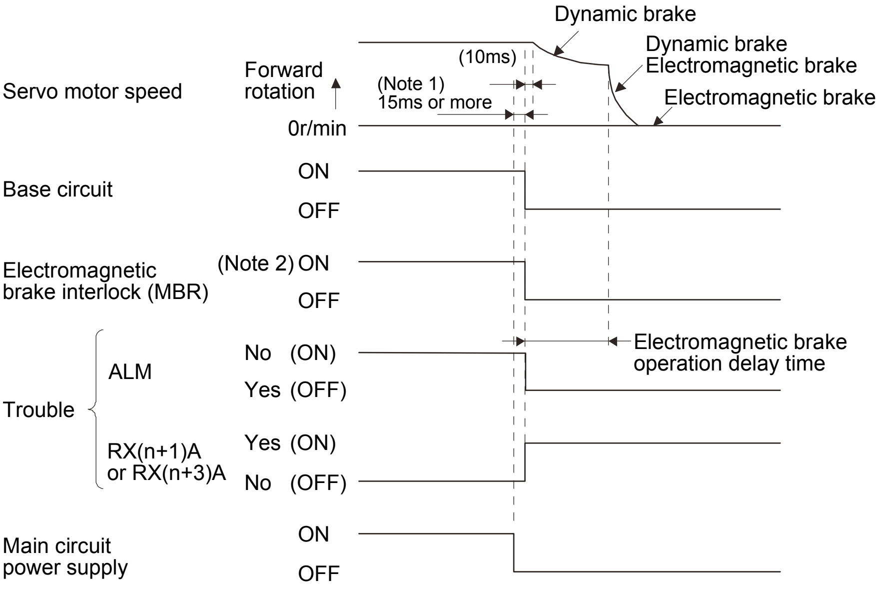

Note 1. Changes with the operating status.
2. ON: Electromagnetic brake is not activated.
OFF: Electromagnetic brake is activated.

4.11.3 Wiring diagrams (HF-MP series・HF-KP series servo motor)

POINT
- For HF-SP series・HC-RP series・HC-UP series・HC-LP series・HF-JP series servo motors, refer to section 4.10.2 (2).

(1) When cable length is 10m or less

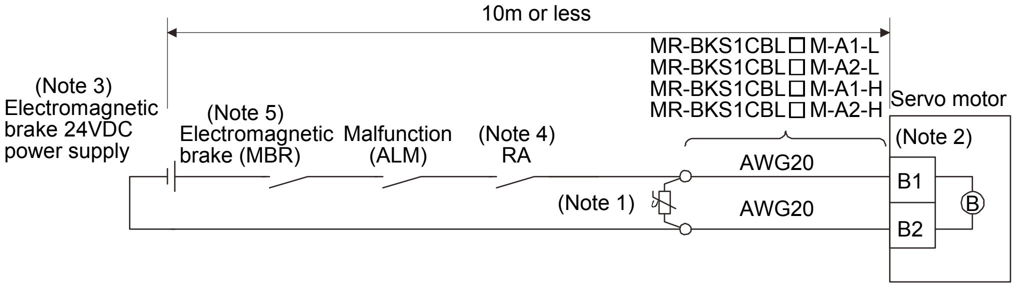

Note 1. Connect a surge absorber as close to the servo motor as possible.
2. There is no polarity in electromagnetic brake terminals (B1 and B2).
3. Do not use the 24VDC interface power supply for the electromagnetic brake.
4. Shut off the circuit by interlocking with the emergency stop switch.
5. When using a servo motor with an electromagnetic brake, assign the electromagnetic brake interlock (MBR) to an external output signal with parameters No.PD09 to PD11.

When fabricating the motor brake cable MR-BKS1CBL-□M-H, refer to section 14.1.4.

(2) When cable length exceeds 10m

When the cable length exceeds 10m, fabricate an extension cable as shown below on the customer side. In this case, the motor brake cable should be within 2m long.

Refer to section 14.9 for the wire used for the extension cable.

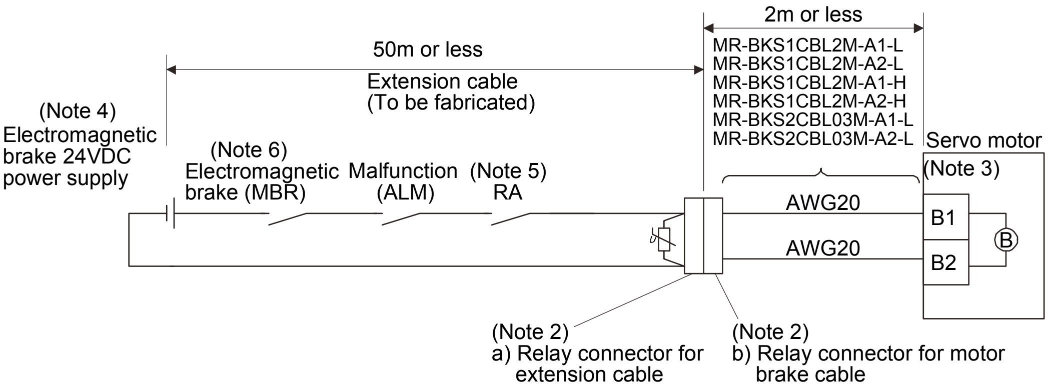

Note 1. Connect a surge absorber as close to the servo motor as possible.

2. Use of the following connectors is recommended when ingress protection (IP65) is necessary.

Relay connector	Description	IP rating
a) Relay connector for extension cable	CM10-CR2P-∗ (DDK) Wire size: S, M, L	IP65
b) Relay connector for electromagnetic brake cable	CMV1-SP2S-∗ (DDK) Wire size: S, M1, M2, L	IP65

3. There is no polarity in electromagnetic brake terminals (B1 and B2).
4. Do not use the 24VDC interface power supply for the electromagnetic brake.
5. Shut off the circuit by interlocking with the emergency stop switch.
6. When using a servo motor with an electromagnetic brake, assign the electromagnetic brake interlock (MBR) to an external output signal with parameters No.PD09 to PD11.

4.12 Grounding

⚠WARNING	- Ground the servo amplifier and servo motor securely. - To prevent an electric shock, always connect the protective earth (PE) terminal (terminal marked ⏚) of the servo amplifier with the protective earth (PE) of the control box.

The servo amplifier switches the power transistor on-off to supply power to the servo motor. Depending on the wiring and ground cable routing, the servo amplifier may be affected by the switching noise (due to di/dt and dv/dt) of the transistor. To prevent such a fault, refer to the following diagram and always ground.
To conform to the EMC Directive, refer to the EMC Installation Guidelines (IB(NA)67310).

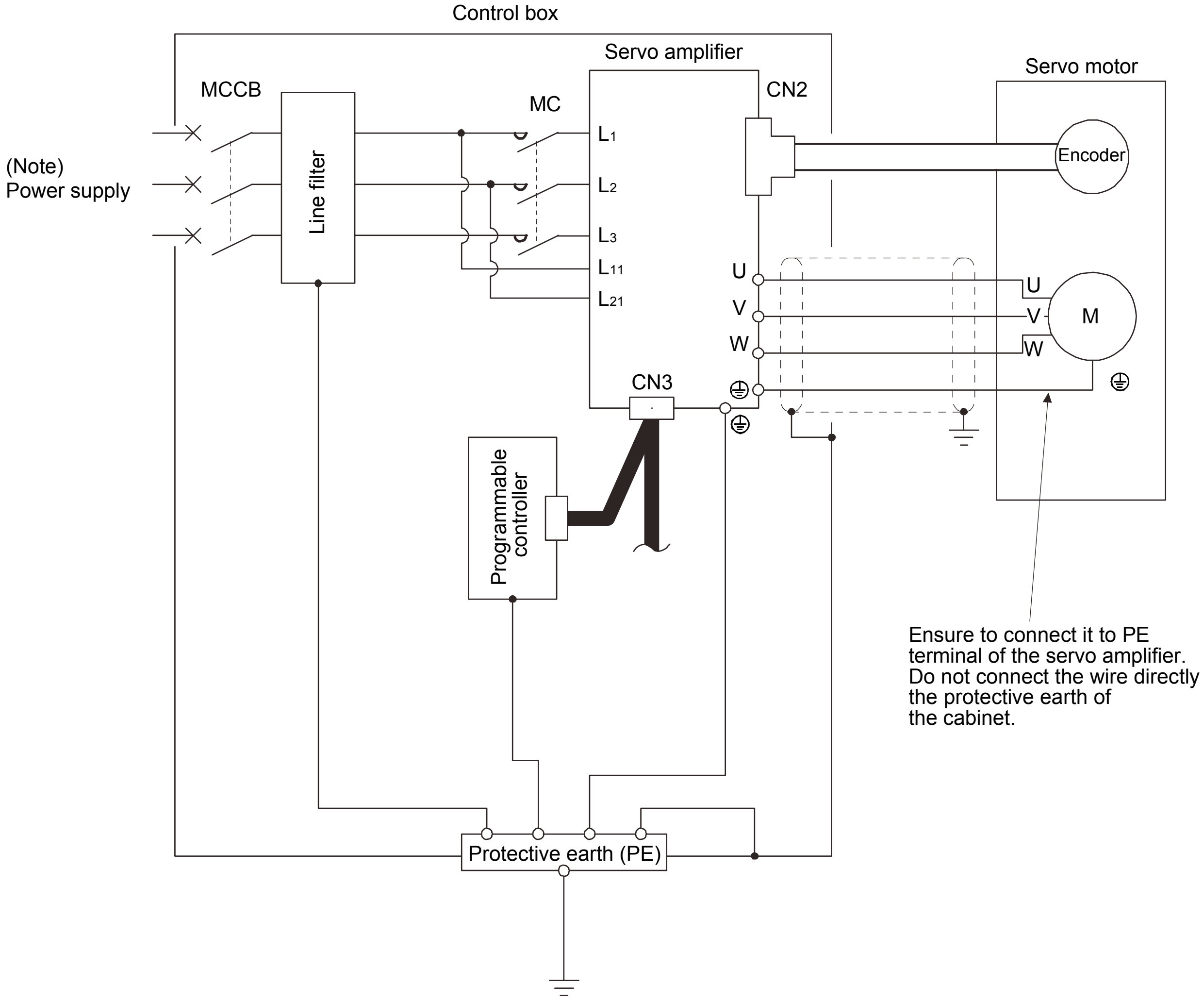

Ensure to connect it to PE terminal of the servo amplifier. Do not connect the wire directly the protective earth of the cabinet.

Note. For 1-phase 200 to 230VAC or 1-phase 100 to 120VAC, connect the power supply to L_1 ・ L_2 and leave L_3 open.
There is no L_3 for 1-phase 100 to 120VAC power supply. Refer to section 1.2 for the power supply specification.

MEMO

5. OPERATION

WARNING

- Do not operate the switches with wet hands. You may get an electric shock.

CAUTION

- Before starting operation, check the parameters. Some machines may perform unexpected operation.
- Take safety measures, e.g. provide covers, to prevent accidental contact of hands and parts (cables, etc.) with the servo amplifier heat sink, regenerative resistor, servo motor, etc. since they may be hot while power is on or for some time after power-off. Their temperatures may be high and you may get burnt or parts may be damaged.
- During operation, never touch the rotating parts of the servo motor. Doing so can cause injury.

5.1 Switching power on for the first time

When switching power on for the first time, follow this section to make a startup.

5.1.1 Startup procedure

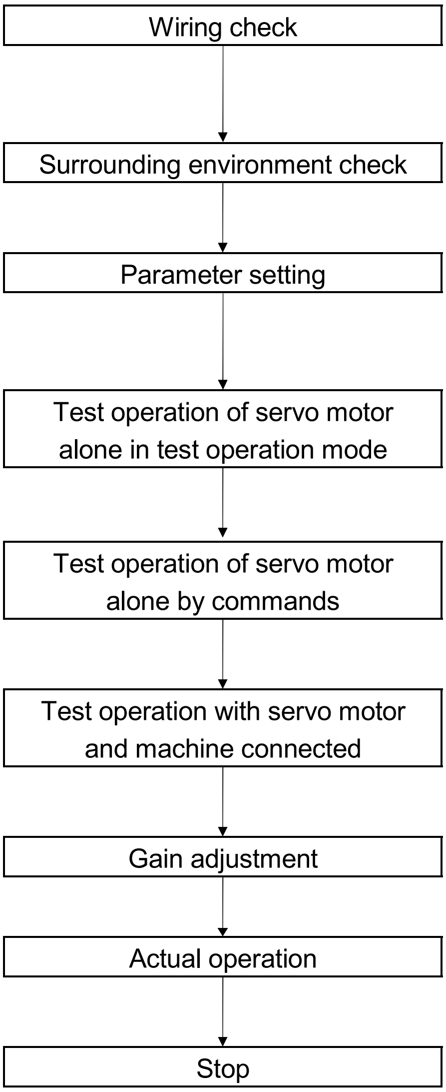

Check whether the servo amplifier and servo motor are wired correctly using visual inspection, DO forced output function (Section 7.7.4, 8.5.7 (4)), etc. (Refer to section 5.1.2.)

Check the surrounding environment of the servo amplifier and servo motor. (Refer to section 5.1.3.)

Set the parameters as necessary, such as the used control mode and regenerative option selection with the MR-PRU03 parameter unit or MR Configurator. (Refer to chapter 6.)

For the test operation, with the servo motor disconnected from the machine and operated at the speed as low as possible, and check whether the servo motor rotates correctly. (Refer to sections 7.7 and 8.5.7.)

For the test operation with the servo motor disconnected from the machine and operated at the speed as low as possible, and check whether the servo motor rotates correctly.

Connect the servo motor with the machine, give operation commands from the controller, and check machine motions.

Make gain adjustment to optimize the machine motions. (Refer to chapter 9.)

Stop giving commands and stop operation.

5.1.2 Wiring check

(1) Power supply system wiring

Before switching on the main circuit and control circuit power supplies, check the following items.

(a) Power supply system wiring

The power supplied to the power input terminals (L_1, L_2, L_3, L_{11}, L_{21}) of the servo amplifier should satisfy the defined specifications. (Refer to section 1.2.)

(b) Connection of servo amplifier and servo motor

1) The servo motor power output (U, V, W) of the servo amplifier match in phase with the power input terminals (U, V, W) of the servo motor.

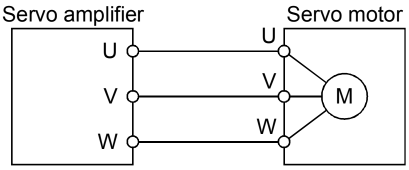

2) The power supplied to the servo amplifier should not be connected to the servo motor power output (U, V, W). To do so will fail the connected servo amplifier and servo motor.

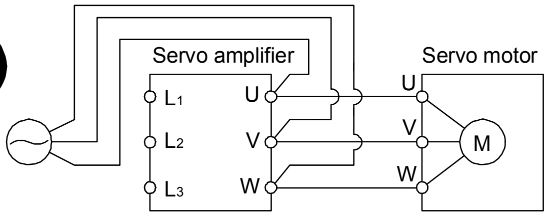

3) The earth terminal of the servo motor is connected to the protective earth (PE) terminal of the servo amplifier.

Reduce the auto tuning response (parameter No.PA09).

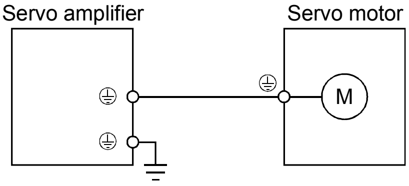

4) P_1-P_2 (For 11kW or more, P_1-P) should be connected.

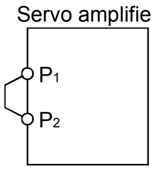

(c) When option and auxiliary equipment are used

1) When regenerative option is used under 3.5kW for 200V class and 2kW for 400V class

- The lead between P terminal and D terminal of CNP2 connector should not be connected.
- The generative brake option should be connected to P terminal and C terminal.
- A twisted cable should be used. (Refer to section 14.2.)

2) When regenerative option is used over 5kW for 200V class and 3.5kW for 400V class
  - The lead of built-in regenerative resistor connected to P terminal and C terminal of TE1 terminal block should not be connected.
  - The generative brake option should be connected to P terminal and C terminal.
  - A twisted cable should be used for wiring. (Refer to section 14.2.)

3) When brake unit and power regenerative converter are used over 5kW
  - The lead of built-in regenerative resistor connected to P terminal and C terminal of TE1 terminal block should not be connected.
  - Brake unit, power regenerative converter or power regeneration common converter should be connected to P terminal and N terminal. (Refer to section 14.3 to 14.5.)
  - A twisted cable should be used for the wiring over 5m and under 10m to use the brake unit. (Refer to section 14.3.)

4) The power factor improving DC reactor should be connected P_1 and P_2 (For 11kW or more, P_1 and P). (Refer to section 14.11.)

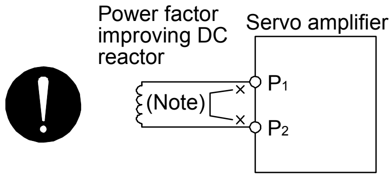

Note. Always disconnect P_1 and P_2 (For 11kW or more, P_1 and P).

(2) I/O signal wiring

(a) The I/O signals should be connected correctly.
Use DO forced output to forcibly turn on/off the pins of the CN6 connector. This function can be used to perform a wiring check. (Refer to section 7.7.4.) In this case, switch on the control circuit power supply only.

(b) 24VDC or higher voltage is not applied to the pins of connectors CN6.

(c) SD and DOCOM of connector CN6 are not shorted.

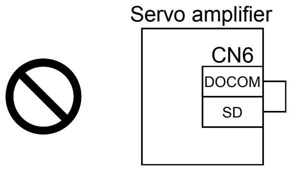

5.1.3 Surrounding environment

(1) Cable routing

(a) The wiring cables are free from excessive force.

(b) The encoder cable should not be used in excess of its flex life. (Refer to section 13.4.)

(c) The connector part of the servo motor should not be strained.

(2) Environment

Signal cables and power cables are not shorted by wire offcuts, metallic dust or the like.

5.2 Startup

5.2.1 Power on and off procedures

(1) Power-on

Switch power on in the following procedure. Always follow this procedure at power-on.

1) Switch off the servo-on (RYn0).
2) Make sure that the Forward rotation start (RYn1) and Reverse rotation start (RYn2) are off.
3) Switch on the main circuit power supply and control circuit power supply.

When main circuit power/control circuit power is switched on, the servo amplifier display shows "b01" (if the servo amplifier has the station number of 1).

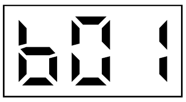

When a power is turned on for the first time in absolute positioning detection system, an absolute position lost (A25) alarm occurs, and the servo system will not be switched on.
The alarm can be deactivated then switching power off once and on again.
Also in the absolute position detection system, if power is switched on at the servo motor speed of 3000r/min or higher, position mismatch may occur due to external force or the like. Power must therefore be switched on when the servo motor is at a stop.

(2) Power-off

1) Make sure that the Forward rotation start (RYn1) and Reverse rotation start (RYn2) are off.
2) Switch off the Servo-on (RYn0).
3) Switch off the main circuit power supply and control circuit power supply.

5.2.2 Stop

In any of the following statuses, the servo amplifier interrupts and stops the operation of the servo motor.
Refer to section 4.11 for the servo motor equipped with an electromagnetic brake.

(a) Servo-on (RYn0) OFF

The base circuit is shut off and the servo motor coasts.

(b) Alarm occurrence

When an alarm occurs, the base circuit is shut off and the dynamic brake is operated to bring the servo motor to a sudden stop.

(c) Forced stop (EMG) OFF

The base circuit is shut off and the dynamic brake is operated to bring the servo motor to a sudden stop. The servo forced stop warning (AE6) occurs.

(d) Forward rotation stroke end (LSP), reverse rotation stroke end (LSN) OFF

The droop pulse value is erased and the servo motor is stopped and servo-locked. It can be run in the opposite direction.

5.2.3 Test operation

Before starting actual operation, perform test operation to make sure that the machine operates normally.
Refer to section 5.2.1 for the power on and off methods of the servo amplifier.

Test operation of servo motor alone in JOG operation of test operation mode

In this step, confirm that the servo amplifier and servo motor operate normally.
With the servo motor disconnected from the machine, use the test operation mode and check whether the servo motor correctly rotates at the slowest speed. Refer to section 7.7 and 8.5.7 for the test operation mode.

Test operation of servo motor alone by commands

In this step, confirm that the servo motor correctly rotates at the slowest speed under the commands from the controller. Make sure that the servo motor rotates in the following procedure.

1) Switch on the Forced stop (EMG) and Servo-on (RYn0). When the servo amplifier is put in a servo-on status, the Ready (RD) switches on.
2) Switch on the Forward rotation stroke end (LSP) or Reverse rotation stroke end (LSN).
3) When the point table is designated from the controller to switch on the forward rotation start (RYn1) or reverse rotation start (RYn2), the servo motor starts rotating. Give a low speed command at first and check the rotation direction, etc. of the servo motor. If the servo motor does not operate in the intended direction, check the input signal.

Test operation with servo motor and machine connected

In this step, connect the servo motor with the machine and confirm that the machine operates normally under the commands from the controller.
Make sure that the servo motor rotates in the following procedure.

1) Switch on the Forced stop (EMG) and Servo-on (RYn0). When the servo amplifier is put in a servo-on status, the Ready (RD) switches on.
2) Switch on the Forward rotation stroke end (LSP) or Reverse rotation stroke end (LSN).
3) When the point table is specified from the controller and the forward rotation start (RYn1) or reverse rotation start (RYn2) is turned ON, the servo motor starts rotating. Give a low speed command at first and check the operation direction, etc. of the machine. If the machine does not operate in the intended direction, check the input signal. In the status display, check for any problems of the servo motor speed, load ratio, etc.
4) Then, check automatic operation with the program of the controller.

5.2.4 Parameter setting

POINT

- The encoder cable MR-EKCBL□M-L/H for the HF-MP series · HF-KP series servo motor requires the parameter No.PC22 setting to be changed depending on its length. Check whether the parameter is set correctly. If it is not set correctly, the encoder error 1 (A16) will occur at power-on.

Encoder cable	Parameter No.PC22 setting
MR-EKCBL20M-L/H	0 □□□ (initial value)
MR-EKCBL30M-H	1 □□□
MR-EKCBL40M-H	
MR-EKCBL50M-H	

The servo amplifier can be used by merely changing the basic setting parameters (No.PA □□) mainly. As necessary, set the gain filter parameters (No.PB □□), extension setting parameters (No.PC □□) and I/O setting parameters (No.PD □□).

Parameter group	Main description
Basic setting parameter (No.PA □□)	Set the basic setting parameters first. Generally, operation can be performed by merely setting this parameter group. In this parameter group, set the following items. Control mode selection Regenerative option selection Absolute position detection system selection Feeding function selection Servo motor speed setting unit selection Electronic gear setting Auto tuning selection and adjustment In-position range setting Torque limit setting Servo motor rotation direction selection Encoder output pulse setting
Gain filter parameter (No.PB □□)	If satisfactory operation cannot be achieved by the gain adjustment made by auto tuning, execute in-depth gain adjustment using this parameter group. This parameter group must also be set when the gain switching function is used.
Extension setting parameter (No.PC □□)	This parameter group is unique to MR-J3-□T servo amplifier.
I/O setting parameter (No.PD □□)	Used when changing the I/O devices of the servo amplifier.

5.2.5 Point table setting

Set necessary items to the point table before starting operation. The following table indicates the items that must be set.

Name	Description
Position data	Set the position data for movement.
Servo motor speed	Set the command speed of the servo motor for execution of positioning.
Acceleration time constant	Set the acceleration time constant.
Deceleration time constant	Set the deceleration time constant.
Dwell	Set the waiting time when performing automatic continuous operation.
Auxiliary function	Set when performing automatic continuous operation.

Refer to section 5.4.2 for details of the point table.

5.2.6 Actual operation

Start actual operation after confirmation of normal operation by test operation and completion of the corresponding parameter settings. Perform a home position return as necessary.

5.3 Servo amplifier display

On the servo amplifier display (three-digit, seven-segment display), check the status of communication with the CC-Link controller at power-on, check the station number, and diagnose a fault at occurrence of an alarm.

(1) Display sequence

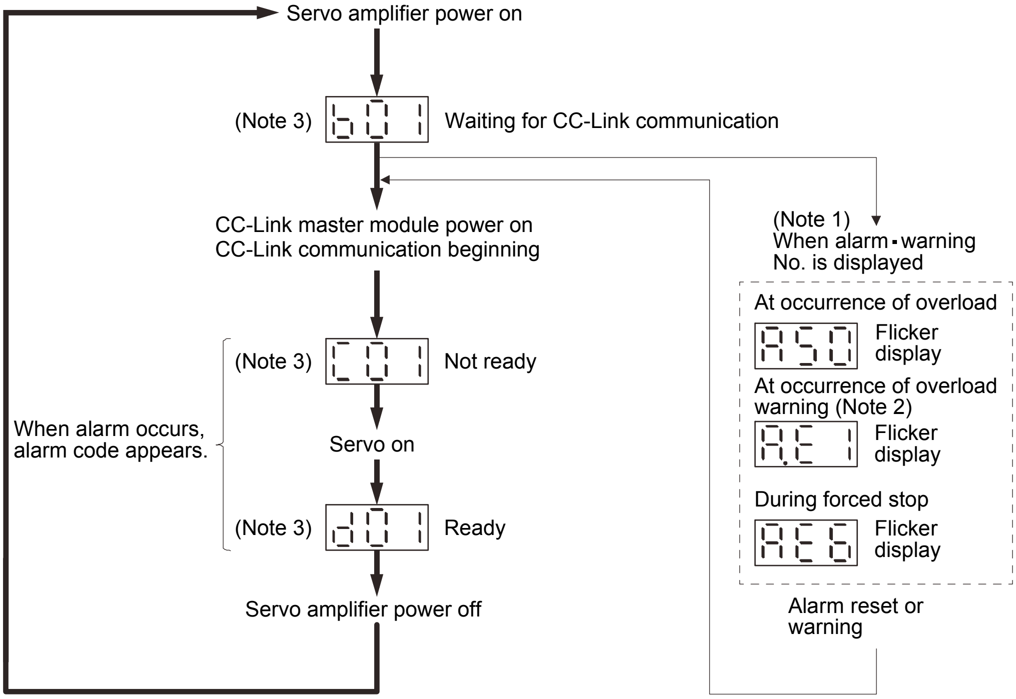

Note 1. Only alarm and warning No. are displayed, but no station No. is displayed.

2. If warning other than AE6 occurs during the servo on, flickering the second place of decimal point indicates that it is during the servo on.

3. The right-hand segments of b01, c02 and d16 indicate the axis number.
(Below example indicates Station No.1)

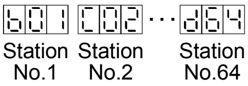

(2) Indication list

Indication	Status	Description
b##	Waiting for CC-Link communication	・Power of the CC-Link master module was switched on at the condition that the power of CC-Link master module is OFF. ・The CC-Link master module is faulty.
(Note 1) d##	Ready	The servo was switched on after completion of initialization and the servo amplifier is ready to operate.
(Note 1) C##	Not ready	The servo amplifier is being initialized or an alarm has occurred.
(Note 2) A∗∗	Alarm・Warning	The alarm No./warning No. that occurred is displayed. (Refer to section 11.4.)
888	CPU error	CPU watchdog error has occurred.
(Note 3) d00. C00.	(Note 3) Test operation mode	JOG operation・positioning operation・programmed operation・DO forced output・single-step feed
(Note 1) d##. C##.		Motor-less operation

Note 1. ## denotes any of numerals 00 to 16 and what it means is listed below.

##	Description
00	Set to the test operation mode.
01	Station number 1
02	Station number 2
03	Station number 3
: :	: :
62	Station number 62
63	Station number 63
64	Station number 64

2. ∗∗ indicates the warning/alarm No.
3. Requires MR Configurator or MR-PRU03 parameter module.

5.4 Automatic operation mode

5.4.1 What is automatic operation mode?

(1) Command system

After selection of preset point tables using the input signals or communication, operation is started by the forward rotation start (RYn1) or reverse rotation start (RYn2). Automatic operation has the absolute value command system, incremental value command system.

(a) Absolute value command system

As position data, set the target address to be reached.

Setting range: −999999 to 999999 [$\times 10^{STM}$ μm] (STM = feed length multiplication parameter No.PA05)

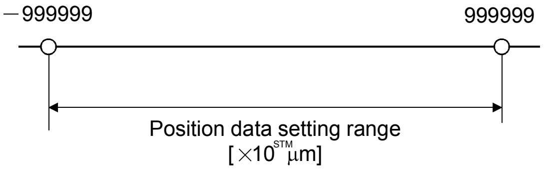

(b) Incremental value command system

As position data, set the moving distance from the current address to the target address.

Setting range: 0 to 999999 [$\times 10^{STM}$ μm] (STM = feed length multiplication parameter No.PA05)

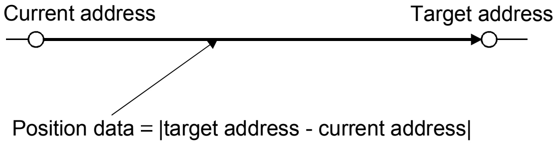

(2) Point table

(a) Point table setting

Up to 255 point tables may be set.

Set the point tables using the MR Configurator Software, the MR-PRU03 parameter unit or CC-Link write instruction code.

The following table lists what to set: Refer to section 5.4.2 for details of the settings.

Name	Description
Position data	Set the position data for movement.
Servo motor speed	Set the command speed of the servo motor for execution of positioning.
Acceleration time constant	Set the acceleration time constant.
Deceleration time constant	Set the deceleration time constant.
Dwell	Set the waiting time when performing automatic continuous operation.
Auxiliary function	Set when performing automatic continuous operation.

(b) Selection of point table

Using CC-Link, select the point table No. from the controller.

The following table lists the point table No. selected in response to RY of CC-Link. When 2 stations are occupied, the point table No. can be selected by remote register setting. (Refer to section 3.6.3.)

RY of CC-Link (0: OFF 1: ON)								Selected point table No.
2 stations occupied								
			1 station occupied					
RY(n+2)5	RY(n+2)4	RY(n+2)3	RYnE	RYnD	RYnC	RYnB	RYnA	
0	0	0	0	0	0	0	1	1
0	0	0	0	0	0	1	0	2
0	0	0	0	0	0	1	1	3
0	0	0	0	0	1	0	0	4
⋮	⋮	⋮	⋮	⋮	⋮	⋮	⋮	⋮
1	1	1	1	1	1	1	0	254
1	1	1	1	1	1	1	1	255

5.4.2 Automatic operation using point table

(1) Absolute value command system

(a) Point table

Set the point table values using the MR Configurator, the MR-PRU03 parameter unit or the remote register of CC-Link.

Set the position data, motor speed, acceleration time constant, deceleration time constant, dwell and auxiliary function to the point table. The following table gives a setting example. However, this function cannot be used when the point table No. is selected using the remote register of CC-Link.

Name	Setting range	Unit	Description
Position data	−999999 to 999999	$\times 10^{STM}\mu m$	(1) When using this point table as absolute value command system Set the target address (absolute value). (2) When using this point table as incremental value command system Set the moving distance. A "-" sign indicates a reverse rotation command.
Motor speed	0 to permissible speed	r/min	Set the command speed of the servo motor for execution of positioning. The setting should be equal to or less than the instantaneous permissible speed of the servo motor.
Acceleration time constant	0 to 20000	ms	Set the time until the rated speed of the servo motor is reached.
Deceleration time constant	0 to 20000	ms	Set the time until the servo motor running at rated speed comes to a stop.
Dwell	0 to 20000	ms	This function is valid when the point table is selected using the input signal or the RY of CC-Link. It cannot be used when the point table No. is selected using the remote register of CC-Link. Set "0" in the auxiliary function to make the dwell invalid. Set "1" in the auxiliary function and 0 in the dwell to perform continuous operation. When the dwell is set, the position command of the selected point table is completed, and after the set dwell has elapsed, the position command of the next point table is started.
Auxiliary function	0 to 3		This function is valid when the point table is selected using the input signal or the RY of CC-Link. It cannot be used when the point table No. is selected using the remote register of CC-Link. (1) When using this point table in the absolute value command system 0: Automatic operation is performed in accordance with a single point table chosen. 1: Operation is performed in accordance with consecutive point tables without a stop. (2) When using this point table in the incremental value command system 2: Automatic operation is performed in accordance with a single point table chosen. 3: Operation is performed in accordance with consecutive point tables without a stop. When a different rotation direction is set, smoothing zero (command output) is confirmed and the rotation direction is then reversed. Setting "1" in point table No.255 results in an error. For full information, refer to (4) in this section.

(b) Parameter setting

Set the following parameters to perform automatic operation.

1) Command mode selection (parameter No.PA01)

Select the absolute value command system.

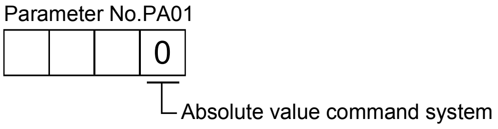

2) Rotation direction selection (parameter No.PA14)

Choose the servo motor rotation direction at the time when the forward rotation start (RYn1) is switched on.

Parameter No.PA14 setting	Servo motor rotation direction when forward rotation start (RYn1) is switched on
0	CCW rotation with + position data CW rotation with － position data
1	CW rotation with + position data CCW rotation with － position data

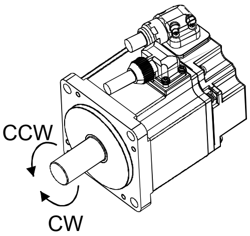

3) Feed length multiplication selection (parameter No.PA05)

Set the unit multiplication factor (STM) of position data.

Parameter No.PA05 setting	Feed unit [μm]	Position data input range [mm]
□□□0	1	－999.999 to +999.999
□□□1	10	－9999.99 to +9999.99
□□□2	100	－99999.9 to +99999.9
□□□3	1000	－999999 to +999999

(c) Operation

Choosing the point table using RYnA to RYnE, RY(n+2)3 to RY(n+2)5 and turning RYn1 ON starts positioning to the position data at the preset speed, acceleration time constant and deceleration time constant. At this time, reverse rotation start (RYn2) is invalid.

Item	Setting method	Description
Automatic operation mode selection	Automatic/manual selection (RYn6)	Turn RYn6 ON.
Point table selection	Point table No. selection 1 (RYnA) Point table No. selection 2 (RYnB) Point table No. selection 3 (RYnC) Point table No. selection 4 (RYnD) Point table No. selection 5 (RYnE) Point table No. selection 6 (RY(n+2)3) Point table No. selection 7 (RY(n+2)4) Point table No. selection 8 (RY(n+2)5)	Refer to section 5.4.1(2).
Start	Forward rotation start (RYn1)	Turn RYn1 ON to start.

(2) Incremental value command system

(a) Point table

Set the point table values using the MR Configurator, the MR-PRU03 parameter unit or the remote register of CC-Link.

Set the position data, motor speed, acceleration time constant, deceleration time constant, dwell and auxiliary function to the point table. The following table gives a setting example.

Name	Setting range	Unit	Description
Position data	0 to 999999	$\times 10^{STM}\mu m$	Set the moving distance. The unit can be changed using feed length multiplication factor selection of parameter No.PA05.
Servo motor speed	0 to permissible speed	r/min	Set the command speed of the servo motor for execution of positioning. The setting should be equal to or less than the instantaneous permissible speed of the servo motor.
Acceleration time constant	0 to 20000	ms	Set the time until the rated speed of the servo motor is reached.
Deceleration time constant	0 to 20000	ms	Set the time until the servo motor running at rated speed comes to a stop.
Dwell	0 to 20000	ms	This function is valid when the point table is selected using the input signal or the RY of CC-Link. It cannot be used when the point table No. is selected using the remote register of CC-Link. Set "0" in the auxiliary function to make the dwell invalid. Set "1" in the auxiliary function and 0 in the dwell to perform continuous operation. When the dwell is set, the position command of the selected point table is completed, and after the set dwell has elapsed, the position command of the next point table is started.
Auxiliary function	0・1		This function is valid when the point table is selected using the input signal or the RY of CC-Link. It cannot be used when the point table No. is selected using the remote register of CC-Link. 0: Automatic operation is performed in accordance with a single point table chosen. 1: Operation is performed in accordance with consecutive point tables without a stop. When a different rotation direction is set, smoothing zero (command output) is confirmed and the rotation direction is then reversed. Setting "1" in point table No.255 results in an error. For full information, refer to (4) in this section.

(b) Parameter setting

Set the following parameters to perform automatic operation.

1) Command mode selection (parameter No.PA01)

Select the incremental value command system.

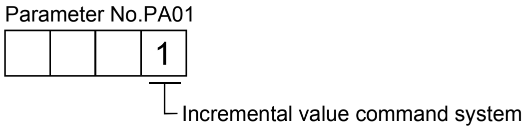

2) Forward rotation direction selection (parameter No.PA14)

Choose the servo motor rotation direction at the time when the forward rotation start (RYn1) signal or reverse rotation start (RYn2) signal is switched on.

Parameter No.PA14 setting	Servo motor rotation direction	
	Forward rotation start (RYn1) ON	Reverse rotation start (RYn2) ON
0	CCW rotation (address incremented)	CW rotation (address decremented)
1	CW rotation (address incremented)	CCW rotation (address decremented)

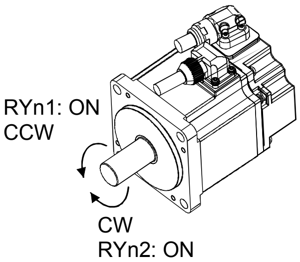

Parameter No.PA14: 0

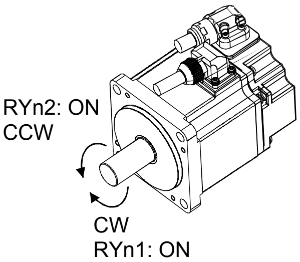

Parameter No.PA14: 1

3) Feed length multiplication selection (parameter No.PA05)

Set the unit multiplication factor (STM) of position data.

Parameter No.PA05 setting	Feed unit [μm]	Position data input range [mm]
□□□0	1	0 to 999.999
□□□1	10	0 to 9999.99
□□□2	100	0 to 99999.9
□□□3	1000	0 to 999999

(c) Operation

Choosing the point table using RYnA to RYnE, RY(n+2)3 to RY(n+2)5 and turning RYn1 ON starts a motion in the forward rotation direction over the moving distance of the position data at the preset speed and acceleration time constant.

Turning RYn2 ON starts a motion in the reverse rotation direction according to the values set to the selected point table.

Item	Setting method	Description
Automatic operation mode selection	Automatic/manual selection (RYn6)	Turn RYn6 ON.
Point table selection	Point table No. selection 1 (RYnA) Point table No. selection 2 (RYnB) Point table No. selection 3 (RYnC) Point table No. selection 4 (RYnD) Point table No. selection 5 (RYnE) Point table No. selection 6 (RY(n+2)3) Point table No. selection 7 (RY(n+2)4) Point table No. selection 8 (RY(n+2)5)	Refer to section 5.4.1(2).
Start	Forward rotation start (RYn1)	Turn RYn1 ON to start motion in forward rotation direction.
	Reverse rotation start (RYn2)	Turn RYn2 ON to start motion in reverse rotation direction.

(3) Automatic operation timing chart

The timing chart is shown below.

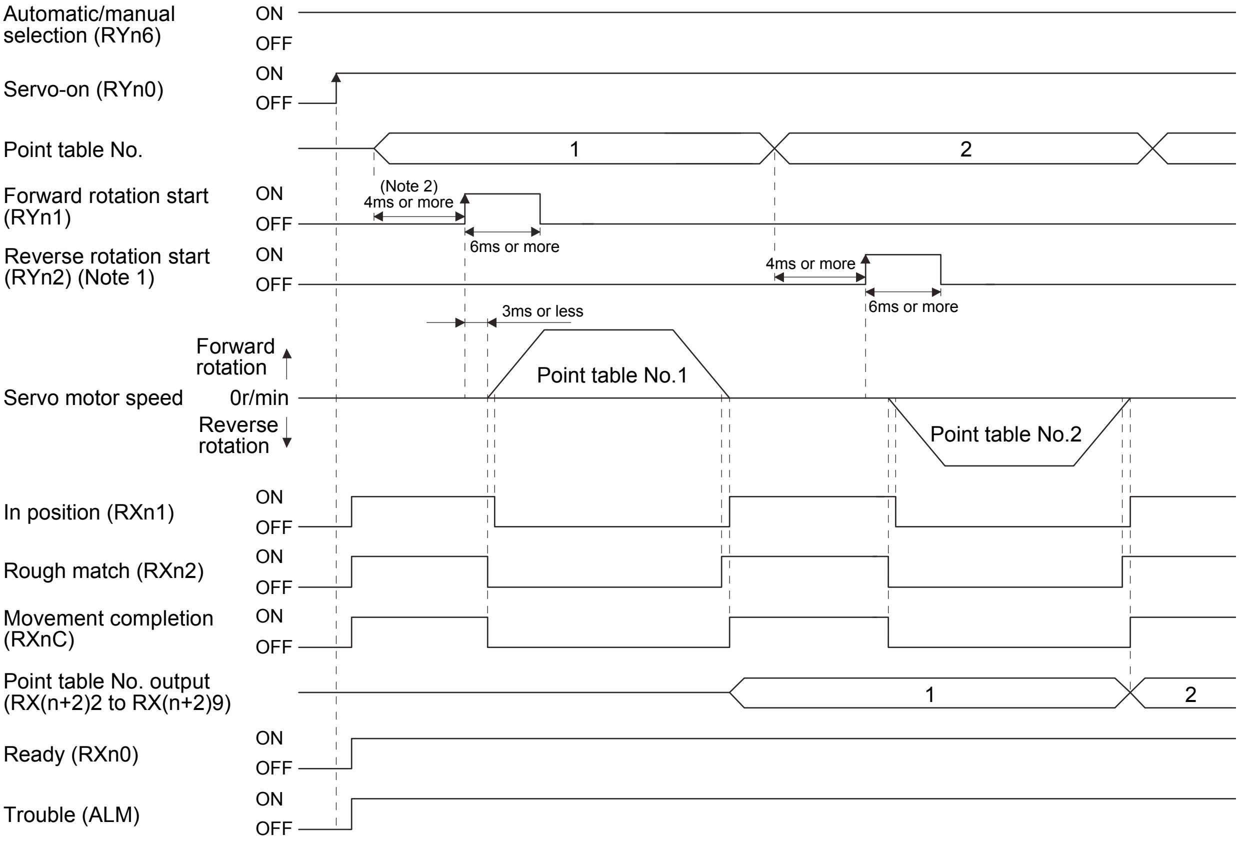

Note 1. Reverse rotation start (RYn2) is invalid in the absolute value command system.

2. Configure a sequence that changes the point table selection earlier, considering the delay time of CC-Link communication.

(4) Automatic continuous operation

POINT

- This function is valid when the point table is selected using the input signal or the RY of CC-Link. It cannot be used when the point table No. is selected using the remote register of CC-Link.

(a) What is automatic continuous operation?

By merely choosing one point table and making a start (RYn1 or RYn2), operation can be performed in accordance with the point tables having consecutive numbers.

Automatic operation is available in two types: varied speed operation and automatic continuous positioning operation.

Either type may be selected as follows.

1) In absolute value command specifying system

		Point table setting		
		Dwell	Auxiliary function	
			When position data is absolute value	When position data is incremental value
Automatic continuous operation	Speed changing operation	0	1	3
	Automatic continuous positioning operation	1 or more	1	3

2) In incremental value command system

		Point table setting	
		Dwell	Auxiliary function
Automatic continuous operation	Speed changing operation	0	1
	Automatic continuous positioning operation	1 or more	1

(b) Varied speed operation

Speed during positioning operation can be changed by setting the auxiliary function of the point table. Use the number of point tables equal to the number of speeds to be set.

By setting "1" to the auxiliary function, operation is performed at the speed set in the next point table during positioning. The position data valid at this time is the data selected at start and the acceleration and deceleration time constants of the subsequent point tables are made invalid.

By setting "1" to the auxiliary function of up to point table No.254, operation can be performed at a maximum of 255 speeds. Set "0" to the auxiliary function of the last point table.

When performing varied speed operation, always set "0" to the dwell. If "1" or more is set, automatic continuous positioning operation is made valid.

The following table gives a setting example.

Point table No.	Dwell [ms] (Note 1)	Auxiliary function	Variable speed operation
1	0	1	Consecutive point table data
2	0	1	
3	0	0 (Note 2)	
4	0	1	Consecutive point table data
5	0	1	
6	0	1	
7	0	0 (Note 2)	

Note 1. Always set "0".

2. Always set "0" or "2" to the auxiliary function of the last point table among the consecutive point tables.

1) Absolute value command specifying system

This system is an auxiliary function for point tables to perform automatic operation by specifying the absolute value command or incremental value command.

・Positioning in single direction

The operation pattern example given below assumes that the set values are as indicated in the following table. Here, the point table No.1 uses the absolute value command system, the point table No.2 the incremental value command system, the point table No.3 the absolute value system, and the point table No.4 the incremental value command system.

Point table No.	Position data [×10^{STM}μm]	Servo motor speed [r/min]	Acceleration time constant [ms]	Deceleration time constant [ms]	Dwell [ms] (Note 1)	Auxiliary function
1	5.00	3000	100	150	0	1
2	3.00	2000	Invalid	Invalid	0	3
3	10.00	1000	Invalid	Invalid	0	1
4	6.00	500	Invalid	Invalid	0	0 (Note 2)

Note 1. Always set "0".

2. Always set "0" or "2" to the auxiliary function of the last point table among the consecutive point tables.

0: When point table is used in absolute value command system

1: When point table is used in incremental value command system

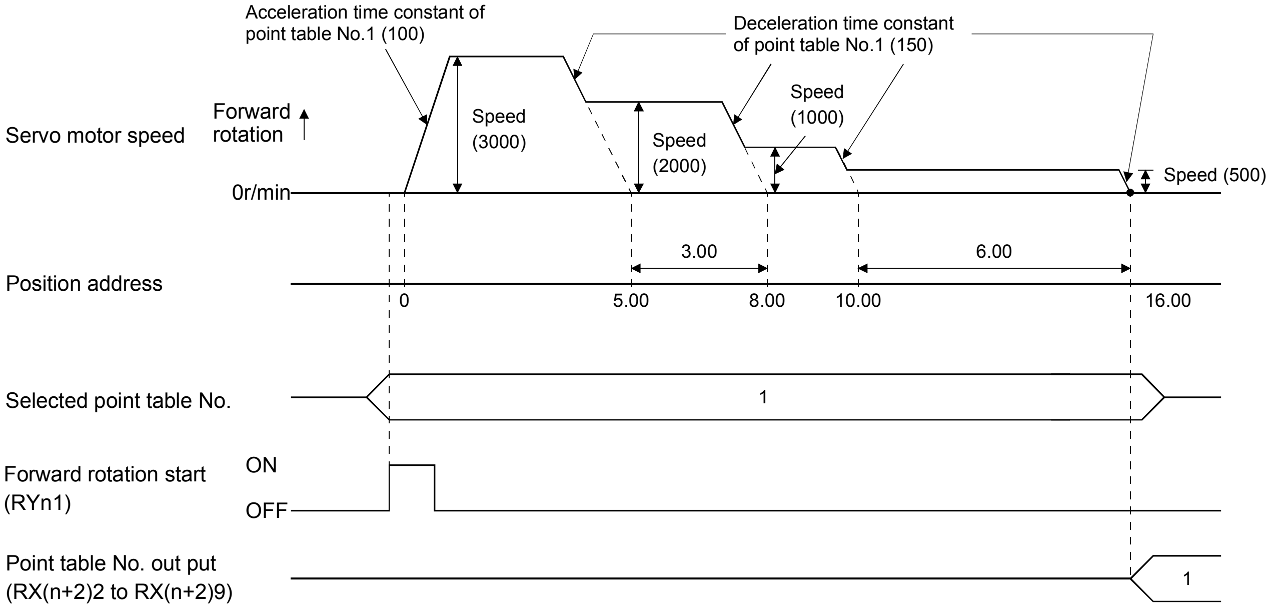

- Positioning that reverses the direction midway

The operation pattern example given below assumes that the set values are as indicated in the following table. Here, the point table No.1 uses the absolute value command system, the point table No.2 the incremental value command system, and the point table No.3 the absolute value system.

Point table No.	Position data [$\times 10^{STM}\mu m$]	Servo motor speed [r/min]	Acceleration time constant [ms]	Deceleration time constant [ms]	Dwell [ms] (Note 1)	Auxiliary function
1	5.00	3000	100	150	0	1
2	7.00	2000	Invalid	Invalid	0	1
3	8.00	1000	Invalid	Invalid	0	0 (Note 2)

Note 1. Always set "0".

2. Always set "0" or "2" to the auxiliary function of the last point table among the consecutive point tables.
0: When point table is used in absolute value command system
1: When point table is used in incremental value command system

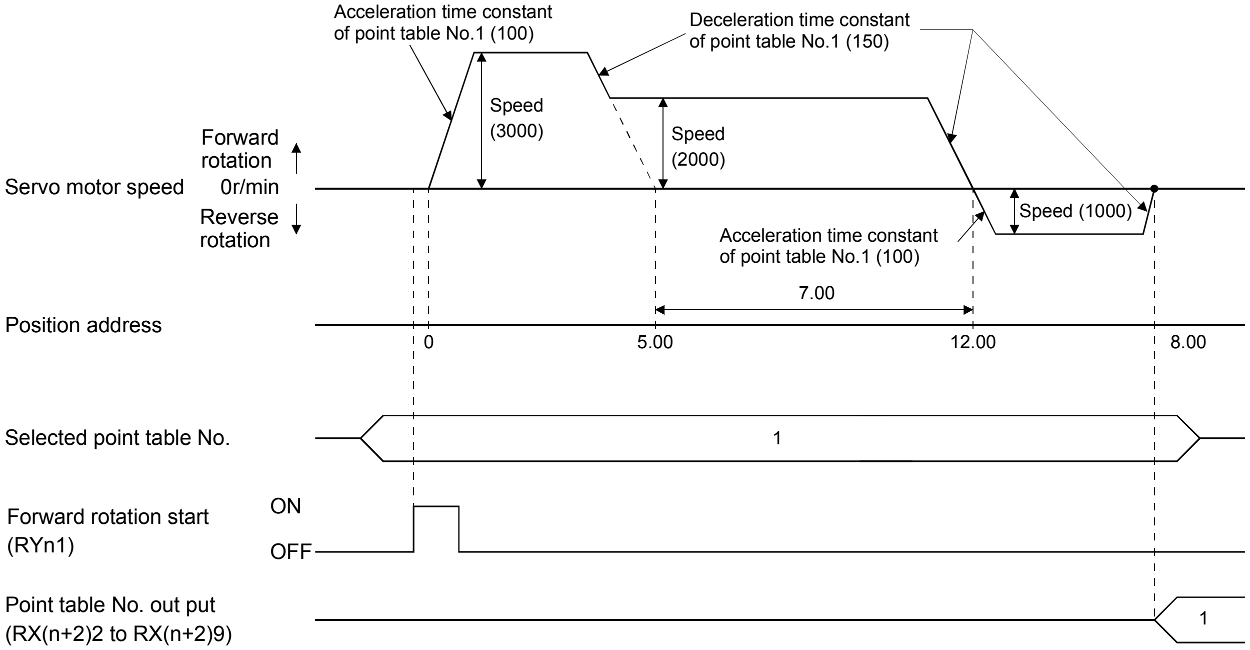

2) Incremental value command system

The position data of the incremental value command system is the sum of the position data of the consecutive point tables.

The operation pattern example given below assumes that the set values are as indicated in the following table.

Point table No.	Position data [$\times 10^{STM}$μm]	Servo motor speed [r/min]	Acceleration time constant [ms]	Deceleration time constant [ms]	Dwell [ms] (Note 1)	Auxiliary function
1	5.00	3000	100	150	0	1
2	6.00	2000	Invalid	Invalid	0	1
3	3.00	1000	Invalid	Invalid	0	0 (Note 2)

Note 1. Always set "0".

2. Always set "0" to the auxiliary function of the last point table among the consecutive point tables.

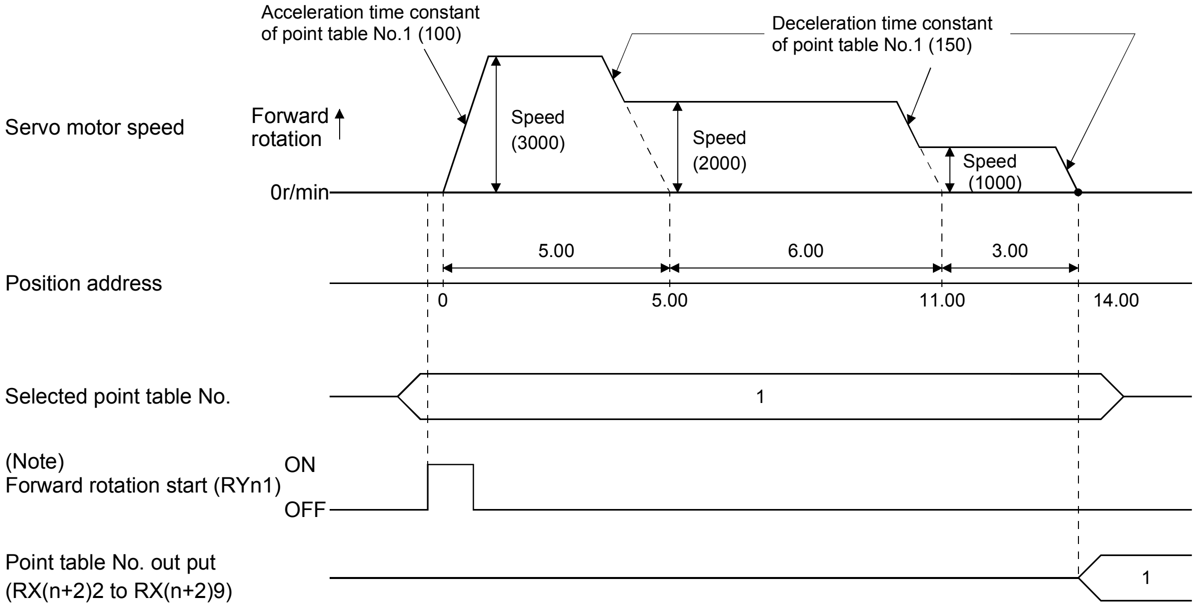

Note. Turning on Reverse rotation start (RYn2) starts positioning in the reverse rotation direction.

(c) Temporary stop/restart

When RYn7 is turned ON during automatic operation, the motor is decelerated to a temporary stop at the deceleration time constant in the point table being executed. When RYn7 is turned ON again, the remaining distance is executed.

If the forward/reverse rotation start signal (RYn1 or RYn2) is ignored if it is switched on during a temporary stop.

The remaining moving distance is cleared when the operation mode is changed from the automatic mode to the manual mode during a temporary stop.

The temporary stop/restart input is ignored during zeroing and jog operation.

1) When the servo motor is rotating

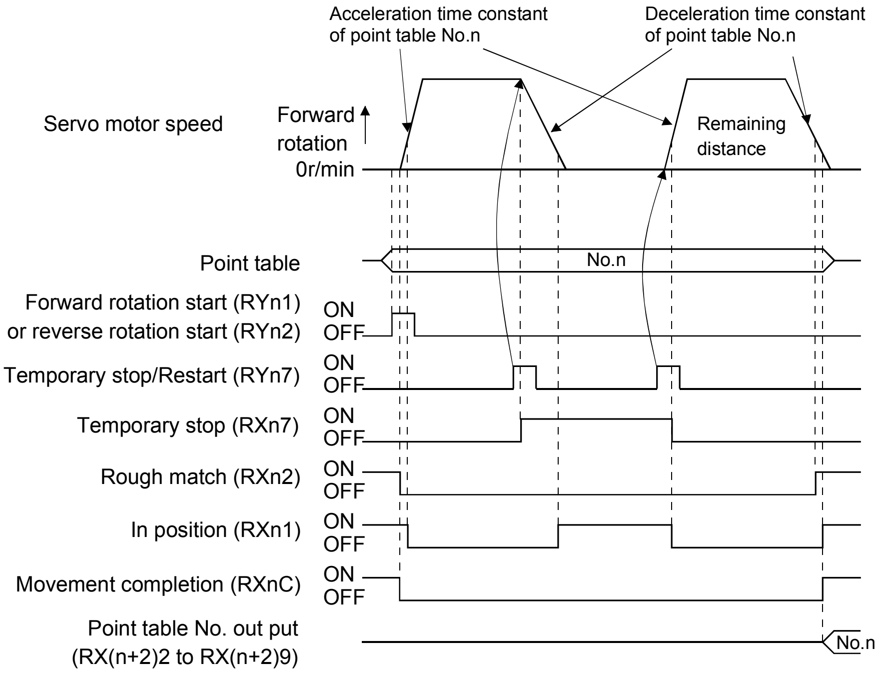

2) During dwell

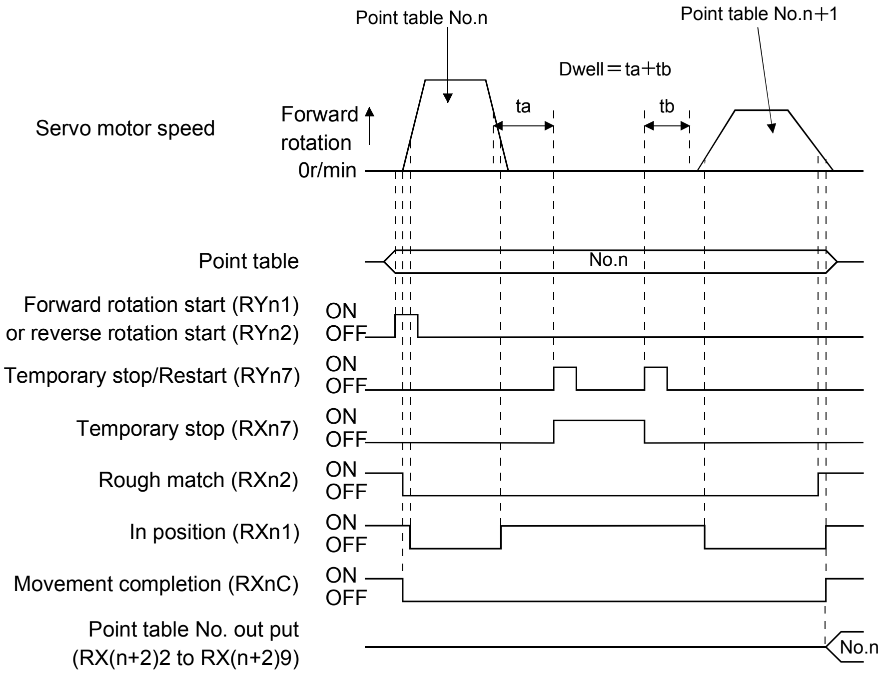

5.4.3 Remote register-based position/speed setting

This operation can be used when 2 stations are occupied. This section explains operation to be performed when the remote register is used to specify the position command data/speed command data.

(1) Absolute value command positioning in absolute value command system

The position data set in the absolute value command system are used as absolute values in positioning. Set the input devices and parameters as indicated below.

Item	Used device/parameter	Description
Automatic operation mode	Automatic/manual selection (RYn6)	Turn RYn6 ON.
Remote register-based position/speed setting	Position/speed specifying system selection (RY(n＋2)A)	Turn RY(n＋2)A ON.
Command system	Parameter No.PA01	□□□0 : Absolute value command system is selected.
Remote register-based position/speed specifying system selection	Parameter No.PC30	□□□2 : Remote register-based position/speed specifying system is selected. In the case, always set an acceleration/deceleration time constant in the point table No.1.
Position data	Position command data lower 16 bit (RWwn＋4)	Set the lower 16 bits of position data to RWwn＋4, and the upper 16 bits to RWwn＋5. Setting range: －999999 to 999999
	Position command data upper 16 bit (RWwn＋5)	
Servo motor speed	Speed command data (RWwn＋6)	Set the servo motor speed.

Set the position data to RWwn＋4/RWwn＋5, and the speed command data to RWwn＋6, and store them into the servo amplifier.

In the absolute value command system, Absolute value/incremental value selection (RY(n＋2)B) can be used to select whether the values set to the position data are absolute values or incremental values. The position data set to RWwn＋4/RWwn＋5 is handled as absolute values when RY(n＋2)B is turned OFF or as incremental values when it is turned ON. During operation, how the position data will be handled (absolute values or incremental values) depends on the status of RY(n＋2)B when Forward rotation start (RYn1) is turned ON.

Here, RY(n＋2)B is turned OFF since the position data are handled as absolute values.

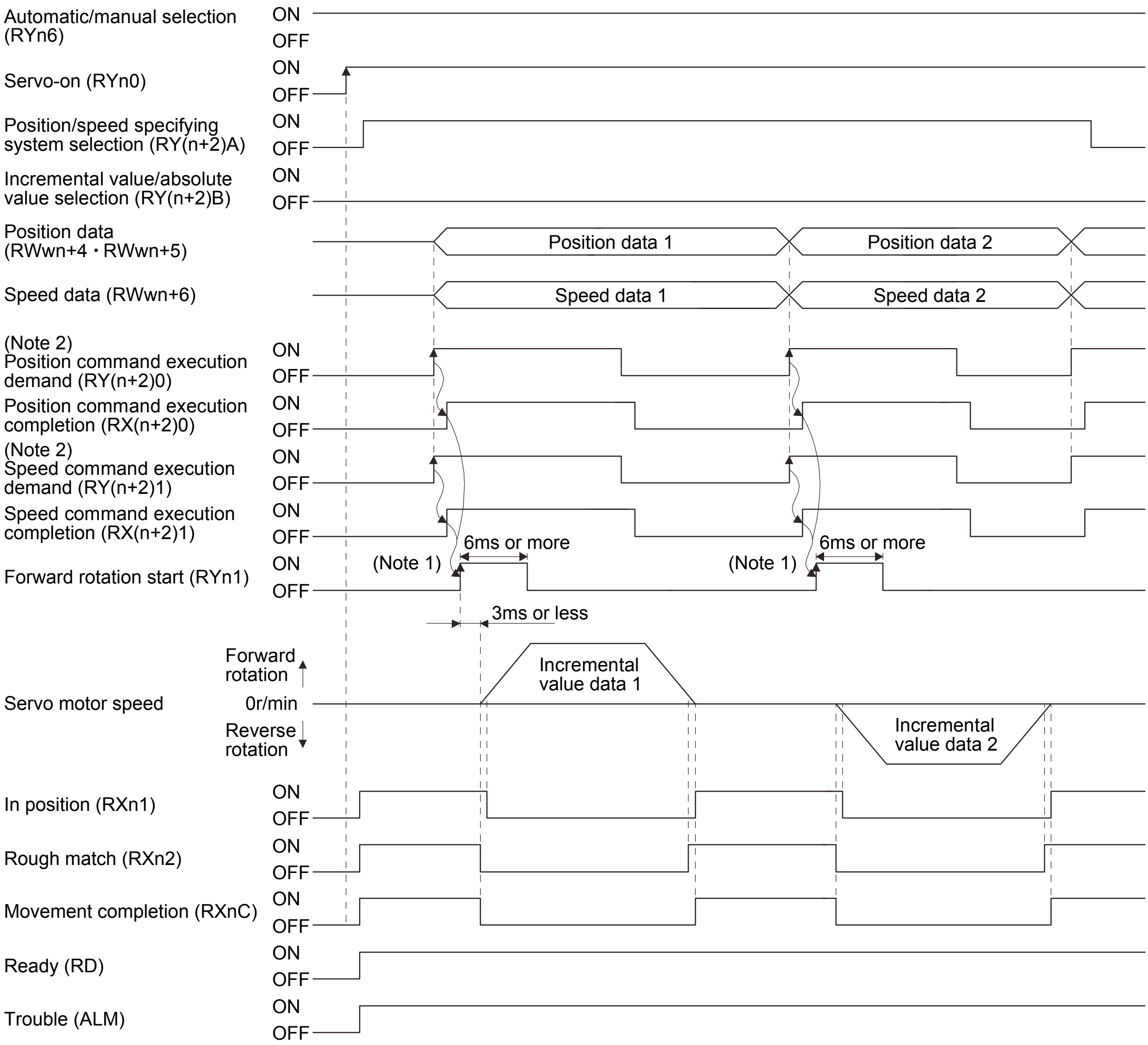

Note 1. Configure a sequence that changes the point table selection earlier, considering the delay time of CC-Link communication.

2. For details of the operation timing of RY(n＋2)0 and RY(n＋2)1, refer to the section 3.6.2 (3).

(2) Incremental value command positioning in absolute value command system

The position data set in the absolute value command system are used as incremental values in positioning. Set the input devices and parameters as indicated below.

Item	Used device/parameter	Description
Automatic operation mode	Automatic/manual selection (RYn6)	Turn RYn6 ON.
Remote register-based position/speed setting	Position/speed specifying system selection (RY(n+2)A)	Turn RY(n+2)A ON.
Command system	Parameter No.PA01	□□□0 : Absolute value command system is selected.
Remote register-based position/speed specifying system selection	Parameter No.PC30	□□□2 : Remote register-based position/speed specifying system is selected.
Position data	Position command data lower 16 bit (RWwn+4)	Set the lower 16 bits of position data to RWwn+4, and the upper 16 bits to RWwn+5. Setting range: −999999 to 999999
	Position command data upper 16 bit (RWwn+5)	
Servo motor speed	Speed command data (RWwn+6)	Set the servo motor speed.

Here, Absolute value/incremental value selection RY(n+2)B is turned ON since the position data are handled as incremental values.

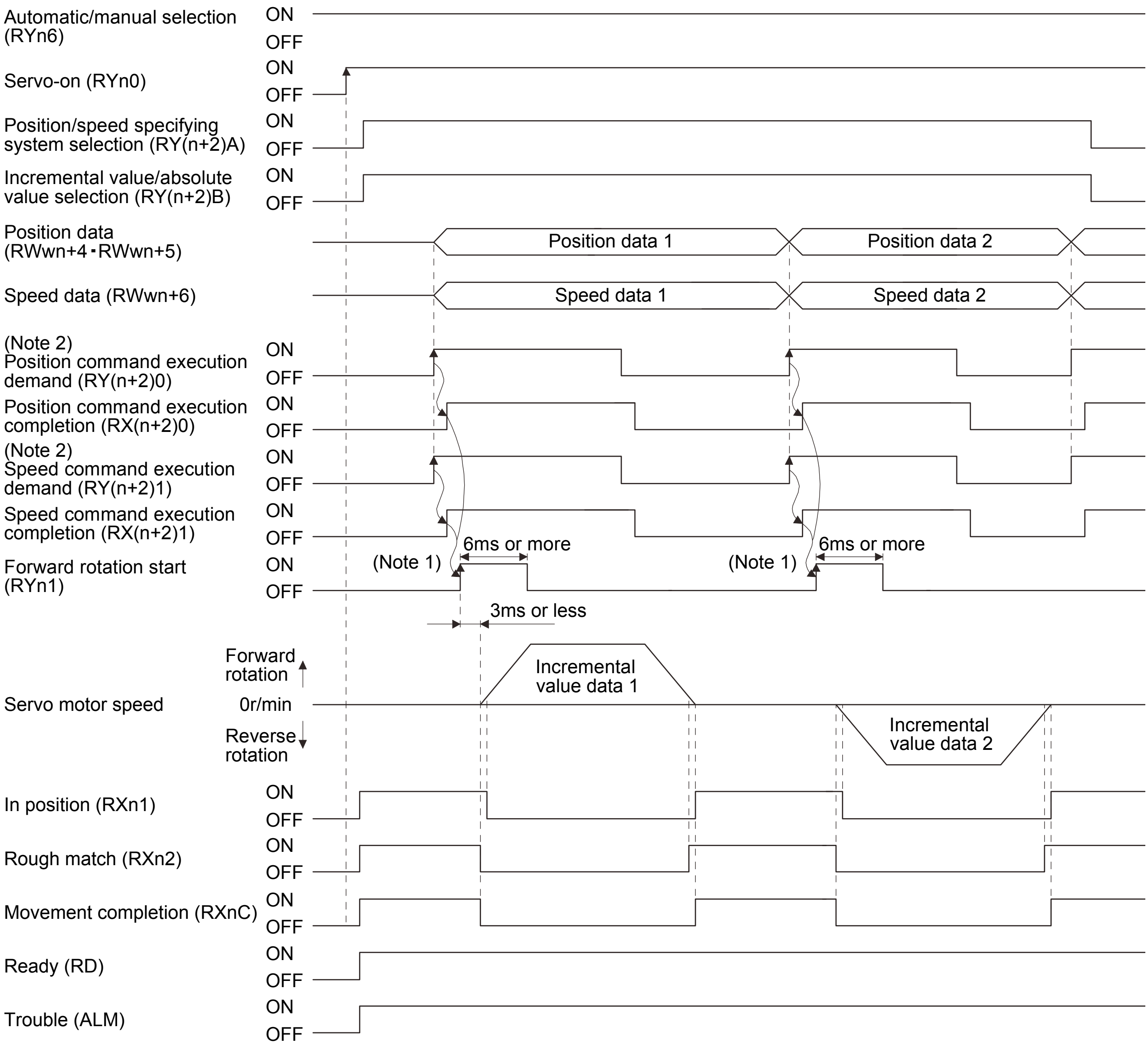

Note 1. Configure a sequence that changes the point table selection earlier, considering the delay time of CC-Link communication.

2. For details of the operation timing of RY(n＋2)0 and RY(n＋2)1, refer to the section 3.6.2 (3).

(3) Positioning in incremental value command system

Execute positioning in the incremental value command system. Set the input signals and parameters as indicated below.

Item	Used device/parameter	Description
Automatic operation mode	Automatic/manual selection (RYn6)	Turn RYn6 ON.
Remote register-based position/speed setting	Position/speed specifying system selection (RY(n+2)A)	Turn RY(n+2)A ON.
Command system	Parameter No.PA01	□□□1 : Incremental value command system is selected.
Remote register-based position/speed specifying system selection	Parameter No.PC30	□□□2 : Remote register-based position/speed specifying system is selected. In the case, always set an acceleration/deceleration time constant in the point table No.1.
Position data	Position command data lower 16 bit (RWwn+4)	Set the lower 16 bits of position data to RWwn+4, and the upper 16 bits to RWwn+5. Setting range: 0 to 999999
	Position command data upper 16 bit (RWwn+5)	
Servo motor speed	Speed command data (RWwn+6)	Set the servo motor speed.

Set "□□□1" in parameter No.PA01 to select the incremental value command system. In the incremental value command system, the position data are handled as incremental values. Hence, Absolute value/incremental value selection (RY(n+2)B) is invalid.

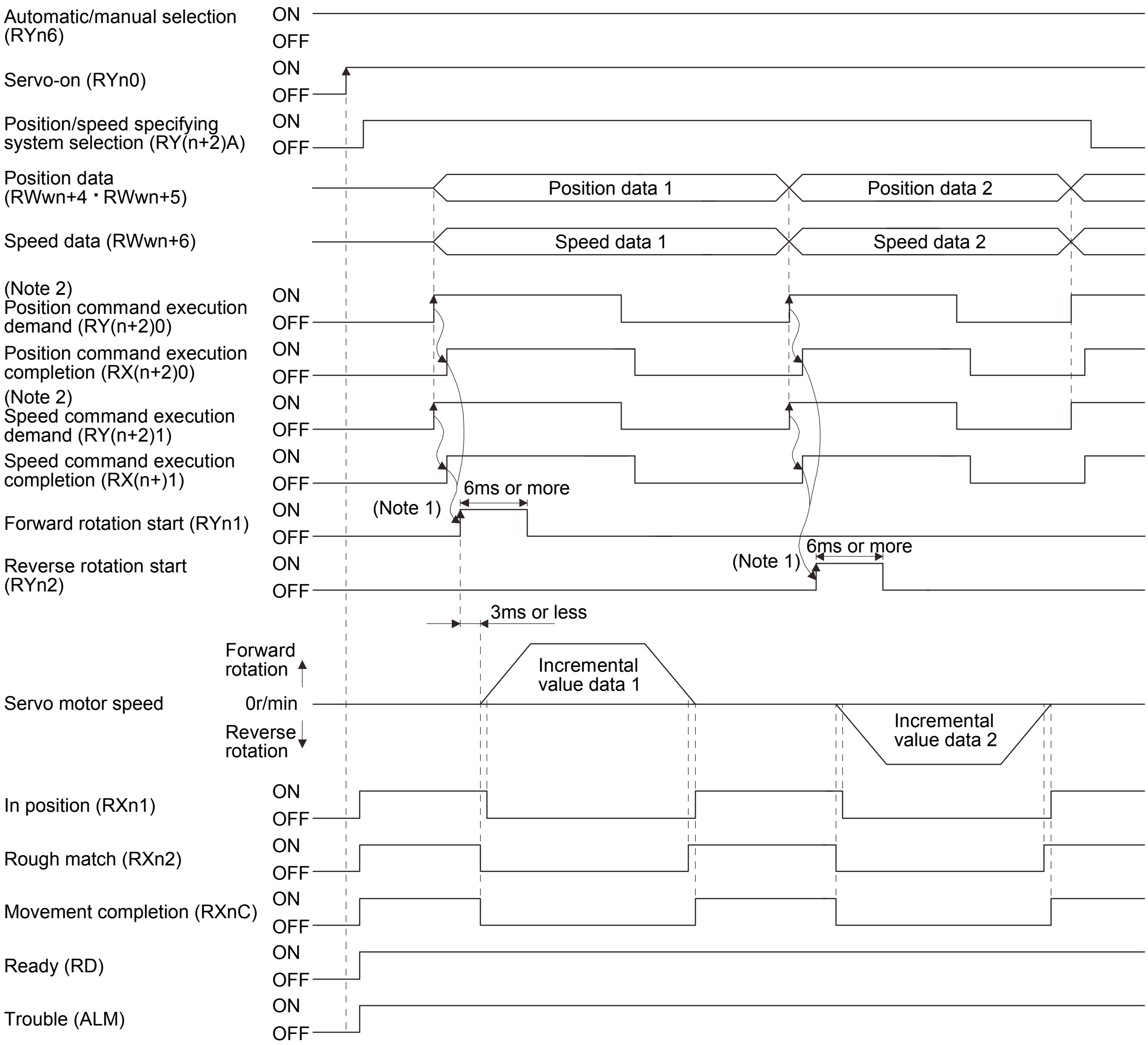

Note 1. Configure a sequence that changes the point table selection earlier, considering the delay time of CC-Link communication.

2. For details of the operation timing of RY(n＋2)0 and RY(n＋2)1, refer to the section 3.6.2 (3).

5.5 Manual operation mode

For machine adjustment, home position matching, etc., jog operation or a manual pulse generator may be used to make a motion to any position.

5.5.1 JOG operation

(1) Setting

Set the input device and parameters as follows according to the purpose of use. In this case, the point table No. selection 1 to 8 (RYnA to RYnE, RY(n＋2)3 to RY(n＋2)5) are invalid.

Item	Used device/parameter	Description
Manual operation mode selection	Automatic/manual selection (RYn6)	Turn RYn6 OFF.
Servo motor rotation direction	Parameter No.PA14	Refer to (2) in this section.
Jog speed	Parameter No.PC12	Set the speed of the servo motor.
Acceleration/deceleration time constant	Point table No.1	Use the acceleration/deceleration time constants in point table No.1.

(2) Servo motor rotation direction

Parameter No.PA14 setting	Servo motor rotation direction	
	Forward rotation start (RYn1) ON	Reverse rotation start (RYn2) ON
0	CCW rotation	CW rotation
1	CW rotation	CCW rotation

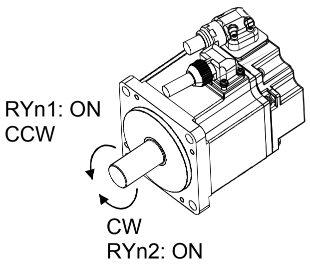

Parameter No.PA14: 0

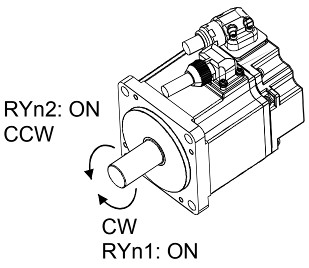

Parameter No.PA14: 1

(3) Operation

By turning RYn1 ON, operation is performed under the conditions of the jog speed set in the parameter and the acceleration and deceleration time constants in set point table No.1. For the rotation direction, refer to (2) in this section. By turning RYn2 ON, the servo motor rotates in the reverse direction to forward rotation start (RYn1).

(4) Timing chart

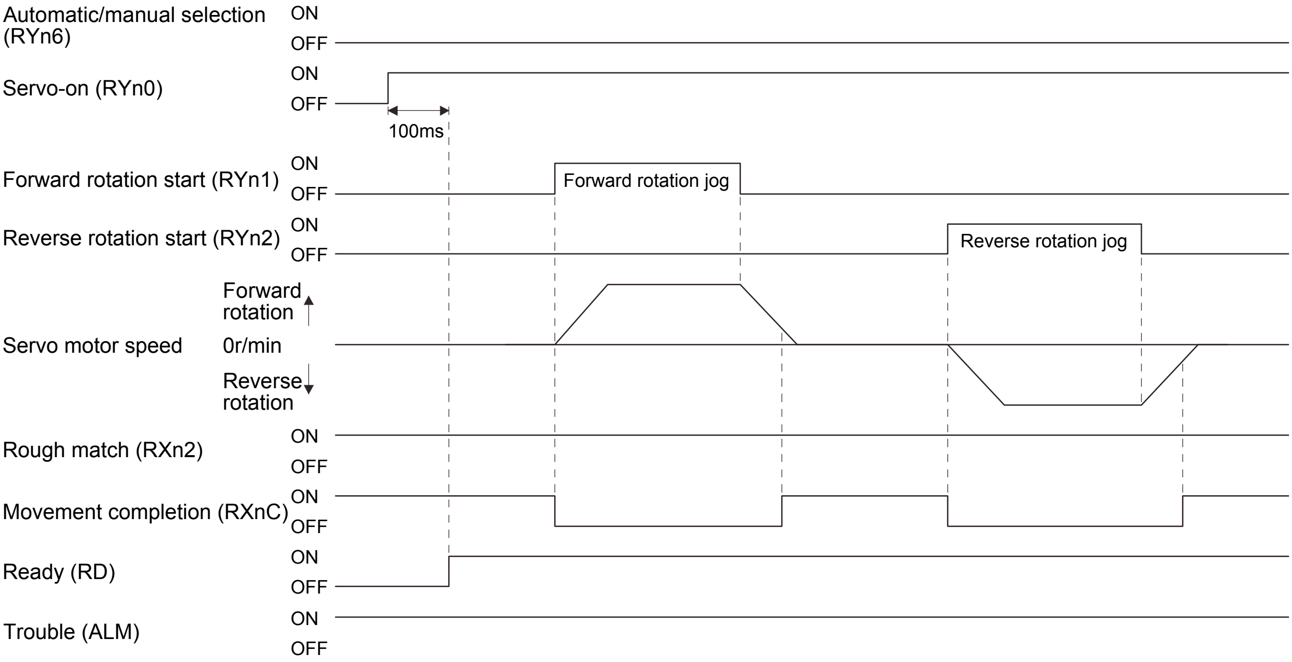

5.5.2 Manual pulse generator

(1) Setting

Set the input signal and parameters as follows according to the purpose of use. In this case, the point table No. selection 1 to 8 (RYnA to RYnE, RY(n+2)3 to RY(n+2)5) are invalid.

Item	Setting method	Description
Manual operation mode selection	Automatic/manual selection (RYn6)	Turn RYn6 OFF.
Manual pulse generator multiplication	Parameter No.PA05	For more information, refer to (3) in this section.
Servo motor rotation direction	Parameter No.PA14	Refer to (2) in this section.

(2) Servo motor rotation direction

Parameter No.PA14 setting	Servo motor rotation direction	
	Manual pulse generator: forward rotation	Manual pulse generator: reverse rotation
0	CCW rotation	CW rotation
1	CW rotation	CCW rotation

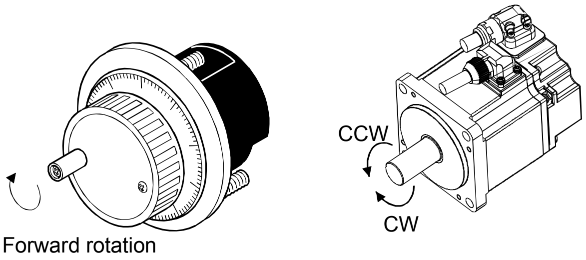

(3) Manual pulse generator multiplication

(a) Using the parameter for setting

Use parameter No.PA05 to set the multiplication ratio of the servo motor rotation to the manual pulse generator rotation.

Parameter No.PA05 setting	Multiplication ratio of servo motor rotation to manual pulse generator rotation	Moving distance
□□0□	1 time	1[μm]
□□1□	10 times	10[μm]
□□2□	100 times	100[μm]

(b) Using the input signals for setting (devices)

Set the pulse generator multiplication 1 (TP0) and the pulse generator multiplication 2 (TP1) to the CN6 connector pins in the parameters of Nos. PD06 to PD08.

(Note) Pulse generator multiplication 2 (TP1)	(Note) Pulse generator multiplication 1 (TP0)	Multiplication ratio of servo motor rotation to manual pulse generator rotation	Moving distance
0	0	Parameter No.PA05 setting valid	
0	1	1 time	1[μm]
1	0	10 times	10[μm]
1	1	100 times	100[μm]

Note. 0: OFF
1: ON

(4) Operation

Turn the manual pulse generator to rotate the servo motor. For the rotation direction of servo motor, refer to (2) in this section.

5.6 Manual home position return mode

5.6.1 Outline of home position return

Home position return is performed to match the command coordinates with the machine coordinates. In the incremental system, home position return is required every time input power is switched on. In the absolute position detection system, once home position return is done at the time of installation, the current position is retained if power is switched off. Hence, home position return is not required when power is switched on again.

This servo amplifier has the home position return methods given in this section. Choose the most appropriate method for your machine structure and application.

This servo amplifier has the home position return automatic return function which executes home position return by making an automatic return to a proper position if the machine has stopped beyond or at the proximity dog. Manual motion by jog operation or the like is not required.

(1) Home position return types

Choose the optimum home position return according to the machine type, etc.

Type	Home position return method	Features
Dog type home position return	With deceleration started at the front end of a proximity dog, the position where the first Z-phase signal is given past the rear end of the dog or a motion has been made over the home position shift distance starting from the Z-phase signal is defined as a home position.	･General home position return method using a proximity dog. ･Repeatability of home position return is excellent. ･The machine is less burdened. ･Used when the width of the proximity dog can be set greater than the deceleration distance of the servo motor.
Count type home position return	With deceleration started at the front end of a proximity dog, the position where the first Z-phase signal is given after advancement over the preset moving distance after the proximity dog or a motion has been made over the home position shift distance starting from the Z-phase signal is defined as a home position.	･Home position return method using a proximity dog. ･Used when it is desired to minimize the length of the proximity dog.
Data setting type home position return	An arbitrary position is defined as a home position.	･No proximity dog required.
Stopper type home position return	The position where the machine stops when its part is pressed against a machine stopper is defined as a home position.	･Since the machine part collides with the machine be fully lowered. ･The machine and stopper strength must be increased.
Home position ignorance (Servo-on position as home position)	The position where servo is switched on is defined as a home position.	
Dog type rear end reference	The position where the axis, which had started decelerating at the front end of a proximity dog, has moved the after-proximity dog moving distance and home position shift distance after it passed the rear end is defined as a home position.	･The Z-phase signal is not needed.
Count type front end reference	The position where the axis, which had started decelerating at the front end of a proximity dog, has moved the after-proximity dog moving distance and home position shift distance is defined as a home position.	･The Z-phase signal is not needed.
Dog cradle type	The position where the first Z-phase signal is issued after detection of the proximity dog front end is defined as a home position.	
Dog type first Z-phase reference	After the proximity dog front end is detected, the current position moves away from the proximity dog in the reverse direction. In this movement, the home position is defined to be where the first Z-phase signal is issued or the position that is the home position shift distance away from where the first Z-phase signal is issued.	
Dog type front end reference	The home position is the front end of the proximity dog.	･The Z-phase signal is not needed.
Dogless Z-phase reference	The home position is defined to be where the first Z-phase signal is issued or the position that is the home position shift distance away from where the first Z-phase signal is issued.	

(2) Home position return parameter

When performing home position return, set each parameter as follows.

(a) Choose the home position return method with parameter No.PC02 (Home position return type).

Parameter No.PC02

0	0	0	

Home position return method
0: Dog type
1: Count type
2: Data setting type
3: Stopper type
4: Home position ignorance (Servo-on position as home position)
5: Dog type rear end reference
6: Count type front end reference
7: Dog cradle type
8: Dog type first Z-phase reference
9: Dog type front end reference
A: Dogless Z-phase reference

(b) Choose the starting direction of home position return with parameter No.PC03 (Home position return direction). Set "0" to start home position return in the direction in which the address is incremented from the current position, or "1" to start home position return in the direction in which the address is decremented.

Parameter No.PC03

0	0	0	

Home position return direction
0: Address increment direction
1: Address decrement direction

(c) Choose the polarity at which the proximity dog is detected with parameter No.PD16 (Input polarity setting). Set "0" to detect the dog when the proximity dog device (DOG) is OFF, or "1" to detect the dog when the device is ON.

Parameter No.PD16

0	0	0	

Proximity dog input polarity
0: OFF indicates detection of the dog
1: ON indicates detection of the dog

(3) Instructions

1) Before starting home position return, always make sure that the limit switch operates.

2) Confirm the home position return direction. Incorrect setting will cause the machine to run reversely.

3) Confirm the proximity dog input polarity. Not doing so may cause unexpected operation.

5.6.2 Dog type home position return

A home position return method using a proximity dog. With deceleration started at the front end of the proximity dog, the position where the first Z-phase signal is given past the rear end of the dog or a motion has been made over the home position shift distance starting from the Z-phase signal is defined as a home position.

(1) Devices, parameters

Set the input devices and parameters as follows.

Item	Device/Parameter used	Description
Manual home position return mode selection	Automatic/manual selection (RYn6)	Turn RYn6 ON.
	Point table No. selection 1 to 8 (RYnA to RYnE, RY(n＋2)3 to RY(n＋2)5)	RYnA to RYnE, RY(n＋2)3 to RY(n＋2)5 are turned off.
Remote register-based position/speed setting (Only when two stations are occupied)	Position/speed specifying system selection (RY(n＋2)A)	Turn RY(n＋2)A ON.
Dog type home position return	Parameter No.PC02	□□□0 :Dog type home position return is selected.
Home position return direction	Parameter No.PC03	Refer to section 5.6.1 (2) and choose home position return direction.
Dog input polarity	Parameter No.PD16	Refer to section 5.6.1 (2) and choose dog input polarity.
Home position return speed	Parameter No.PC04	Set speed until detection of dog.
Creep speed	Parameter No.PC05	Set speed after detection of dog.
Home position shift distance	Parameter No.PC06	Set when shifting the home position starting at the first Z-phase signal after passage of proximity dog rear end.
Home position return acceleration/deceleration time constants	Point table No.1	Use the acceleration/deceleration time constants of point table No.1.
Home position return position data	Parameter No.PC07	Set the current position at home position return completion.

(2) Length of proximity dog

To ensure that the Z-phase signal of the servo motor is generated during detection of the proximity dog (DOG), the proximity dog should have the length which satisfies formulas (5.1) and (5.2).

$$L_1 \geq \frac{V}{60} \cdot \frac{td}{2} \text{ .... } (5.1)$$

L_1 : Proximity dog length [mm]

V : Home position return speed [mm/min]

td : Deceleration time [s]

$$L_2 \geq 2 \cdot \Delta S \text{ .... } (5.2)$$

L_2 : Proximity dog length [mm]

ΔS : Moving distance per servo motor revolution [mm]

(3) Timing chart

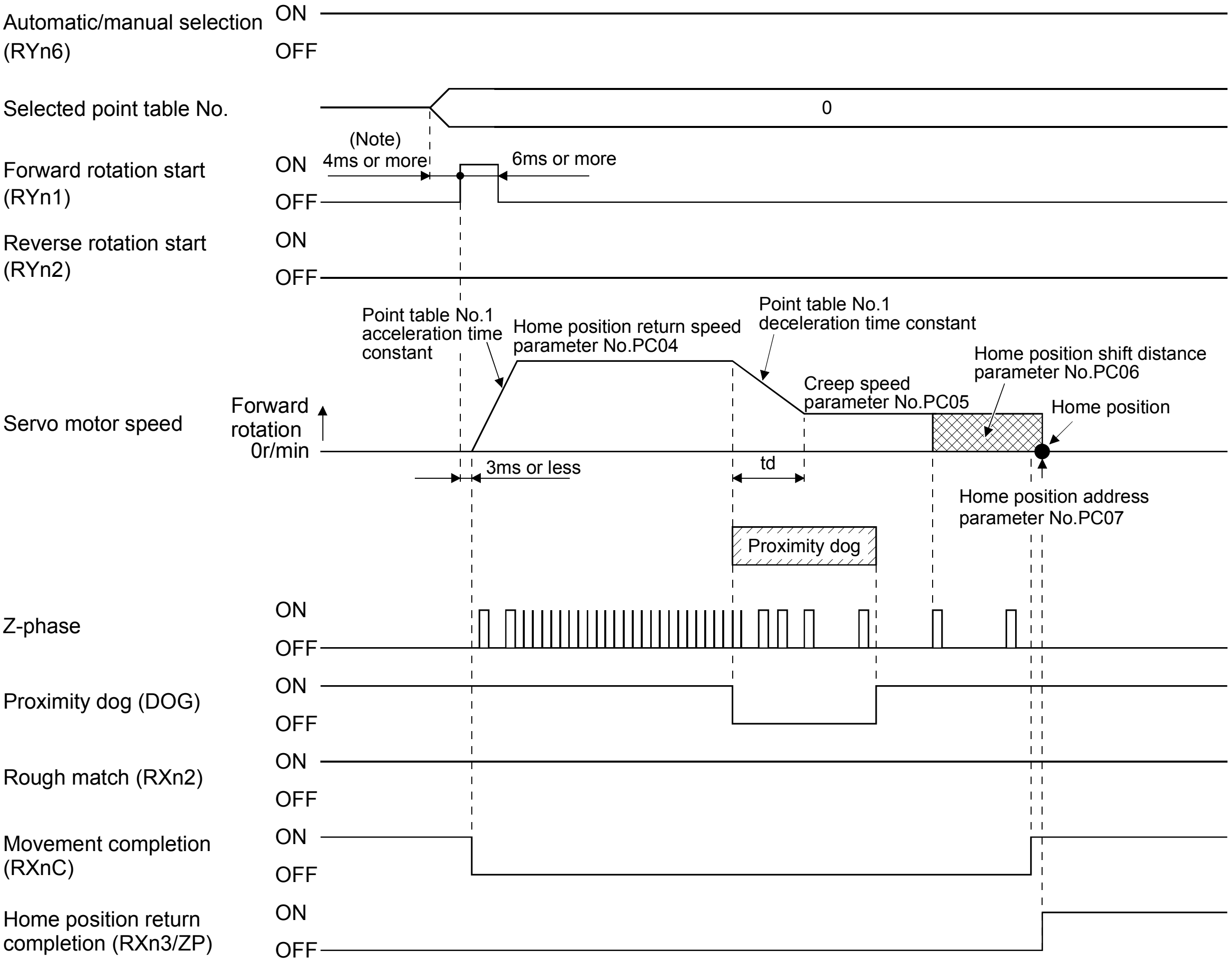

Note. Configure a sequence that changes the point table selection earlier, considering the delay time of CC-Link communication.

The parameter No.PC07 (home position return position data) setting value is the positioning address after the home position return is completed.

(4) Adjustment

In dog type home position return, adjust to ensure that the Z-phase signal is generated during dog detection. Locate the rear end of the proximity dog (DOG) at approximately the center of two consecutive Z-phase signals.

The position where the Z-phase signal is generated can be monitored in "Within one-revolution position" of "Status display" of the MR Configurator or the parameter unit.

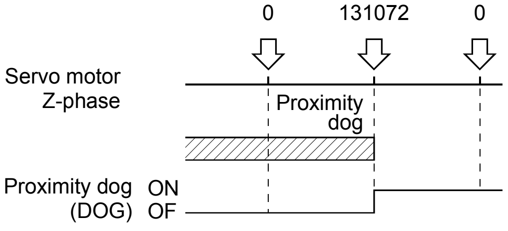

5.6.3 Count type home position return

In count type home position return, a motion is made over the distance set in parameter No.PC08 (moving distance after proximity dog) after detection of the proximity dog front end. The position where the first Z-phase signal is given after that is defined as a home position. Hence, if the proximity dog (DOG) is 10ms or longer, there is no restriction on the dog length. This home position return method is used when the required proximity dog length cannot be reserved to use dog type home position return or when the proximity dog (DOG) is entered electrically from a controller or the like.

(1) Devices, parameters

Set the input devices and parameters as follows.

Item	Device/Parameter used	Description
Manual home position return mode selection	Automatic/manual selection (RYn6)	Turn RYn6 ON.
	Point table No. selection 1 to 8 (RYnA to RYnE, RY(n＋2)3 to RY(n＋2)5)	RYnA to RYnE, RY(n＋2)3 to RY(n＋2)5 are turned off.
Remote register-based position/speed setting (Only when two stations are occupied)	Position/speed specifying system selection (RY(n＋2)A)	Turn RY(n＋2)A ON.
Count type home position return	Parameter No.PC02	□□□1: Count type home position return is selected.
Home position return direction	Parameter No.PC03	Refer to section 5.6.1 (2) and choose home position return direction.
Dog input polarity	Parameter No.PD16	Refer to section 5.6.1 (2) and choose dog input polarity.
Home position return speed	Parameter No.PC04	Set speed until detection of dog.
Creep speed	Parameter No.PC05	Set speed after detection of dog.
Home position shift distance	Parameter No.PC06	Set when shifting the home position, starting at the first Z-phase signal given after passage of the proximity dog front end and movement over the moving distance.
Moving distance after proximity dog	Parameter No.PC08	Set the moving distance after passage of proximity dog front end.
Home position return acceleration/deceleration time constants	Point table No.1	Use the acceleration/deceleration time constants of point table No.1.
Home position return position data	Parameter No.PC07	Set the current position at home position return completion.

(2) Timing chart

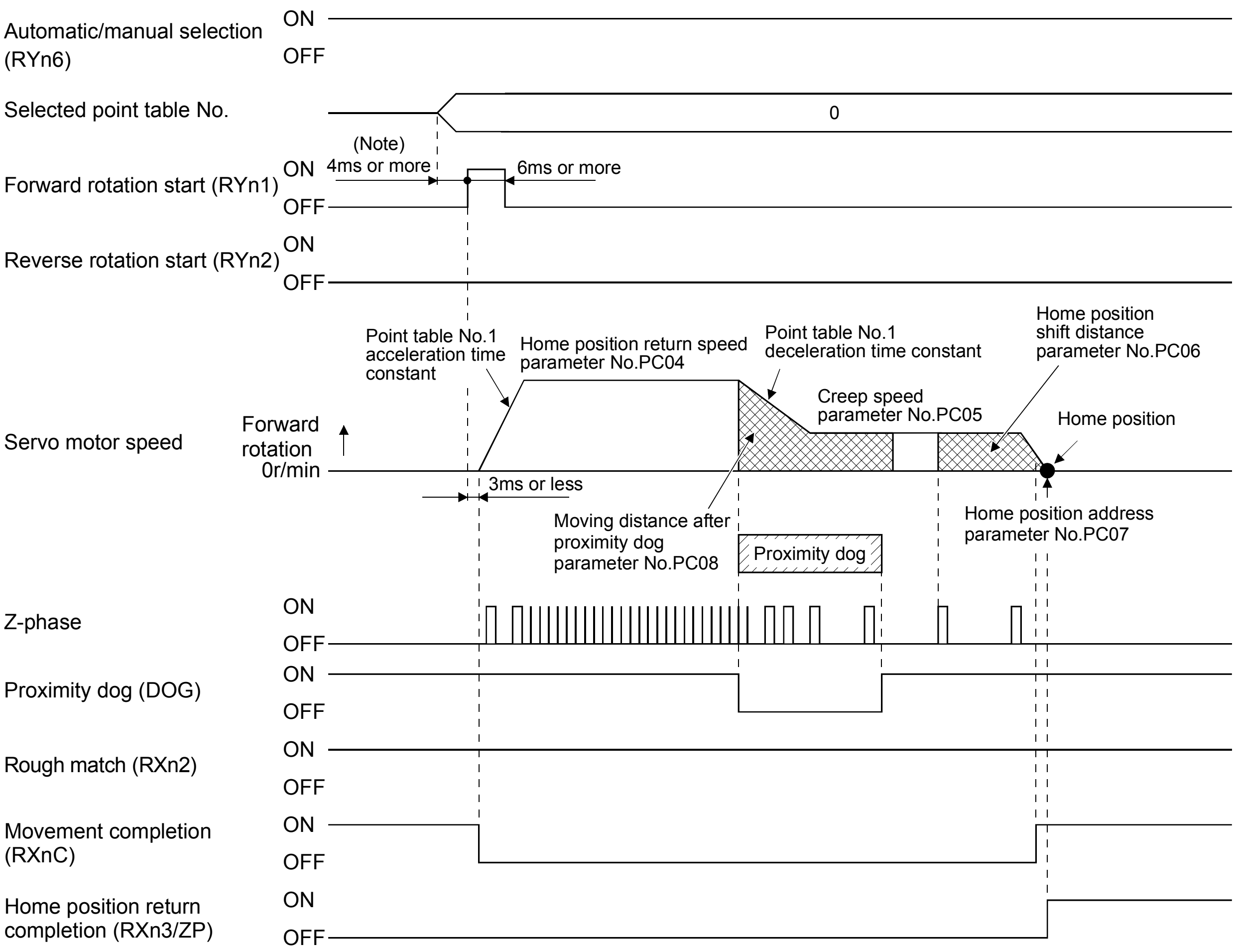

Note. Configure a sequence that changes the point table selection earlier, considering the delay time of CC-Link communication.

The parameter No.PC07 (home position return position data) setting value is the positioning address after the home position return is completed.

5.6.4 Data setting type home position return

Data setting type home position return is used when it is desired to determine any position as a home position. JOG operation can be used for movement.

(1) Devices, parameters

Set the input devices and parameters as follows.

Item	Device/Parameter used	Description
Manual home position return mode selection	Automatic/manual selection (RYn6)	Turn RYn6 ON.
	Point table No. selection 1 to 8 (RYnA to RYnE, RY(n+2)3 to RY(n+2)5)	RYnA to RYnE, RY(n+2)3 to RY(n+2)5 are turned off.
Remote register-based position/speed setting (Only when two stations are occupied)	Position/speed specifying system selection (RY(n+2)A)	Turn RY(n+2)A ON.
Data setting type home position return	Parameter No.PC02	□□□2: Data setting type home position return is selected.
Home position return position data	Parameter No.PC07	Set the current position at home position return completion.

(2) Timing chart

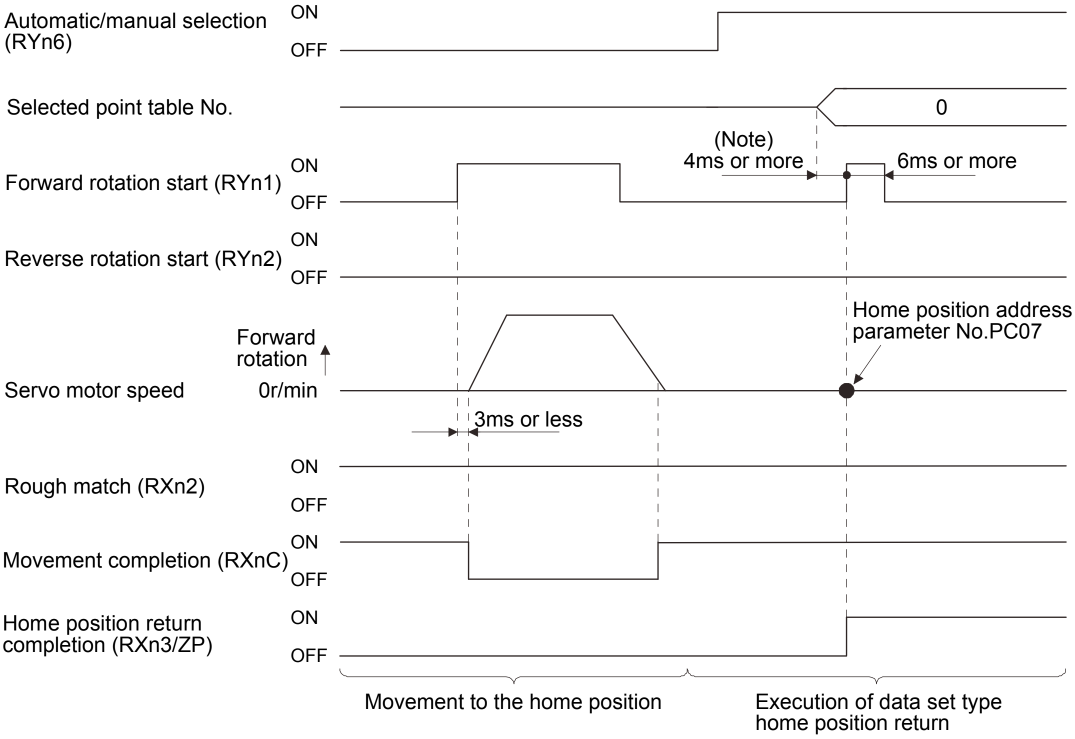

Note. Configure a sequence that changes the point table selection earlier, considering the delay time of CC-Link communication.

The parameter No.PC07 (home position return position data) setting value is the positioning address after the home position return is completed.

5.6.5 Stopper type home position return

In stopper type home position return, a machine part is pressed against a stopper or the like by jog operation to make a home position return and that position is defined as a home position.

(1) Devices, parameters

Set the input devices and parameters as follows.

Item	Device/Parameter used	Description
Manual home position return mode selection	Automatic/manual selection (RYn6)	Turn RYn6 ON.
	Point table No. selection 1 to 8 (RYnA to RYnE, RY(n＋2)3 to RY(n＋2)5)	RYnA to RYnE, RY(n＋2)3 to RY(n＋2)5 are turned off.
Remote register-based position/speed setting (Only when two stations are occupied)	Position/speed specifying system selection (RY(n＋2)A)	Turn RY(n＋2)A ON.
Stopper type home position return	Parameter No.PC02	□□□3:Stopper type home position return is selected.
Home position return direction	Parameter No.PC03	Refer to section 5.6.1 (2) and choose the home position return direction.
Home position return speed	Parameter No.PC04	Set the speed till contact with the stopper.
Stopper time	Parameter No.PC09	Time from when the part makes contact with the stopper to when home position return data is obtained to output home position return completion (ZP).
Stopper type home position return torque limit value	Parameter No.PC10	Set the servo motor torque limit value for execution of stopper type home position return.
Home position return acceleration time constant	Point table No.1	Use the acceleration time constant of point table No.1.
Home position return position data	Parameter No.PC07	Set the current position at home position return completion.

(2) Timing chart

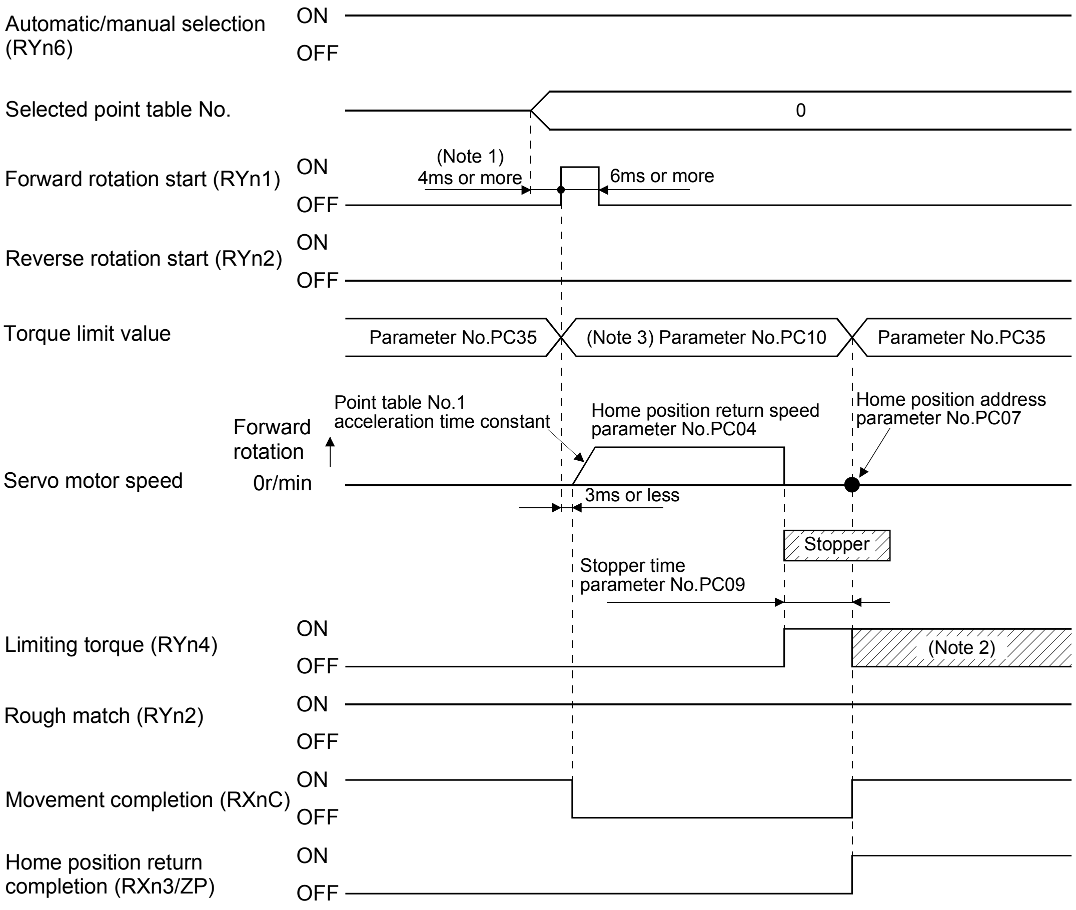

Note 1. Configure a sequence that changes the point table selection earlier, considering the delay time of CC-Link communication.

2. Turns ON when the torque reaches the value set to Forward rotation torque limit (parameter No.PA11), Reverse rotation torque limit (parameter No.PA12) or Internal torque limit (parameter No.PC35).

3. The torque limit that is enabled at this point is as follows.

(Note) Internal torque limit selection (RY(n＋2)6)	Limit value status	Torque limit to be enabled
0		Parameter No.PC10
1	Parameter No.PC35 > Parameter No.PC10	Parameter No.PC10
	Parameter No.PC35 < Parameter No.PC10	Parameter No.PC35

Note. 0: OFF
1: ON

The parameter No.PC07 (home position return position data) setting value is the positioning address after the home position return is completed.

5.6.6 Home position ignorance (servo-on position defined as home position)

The position where servo is switched on is defined as a home position.

POINT

- When executing this home position return, changing to the home position return mode is not necessary.

(1) Devices, parameter

Set the input devices and parameter as follows.

Item	Device/Parameter used	Description
Home position ignorance	Parameter No.PC02	□□□4: Home position ignorance is selected.
Home position return position data	Parameter No.PC07	Set the current position at home position return completion.

(2) Timing chart

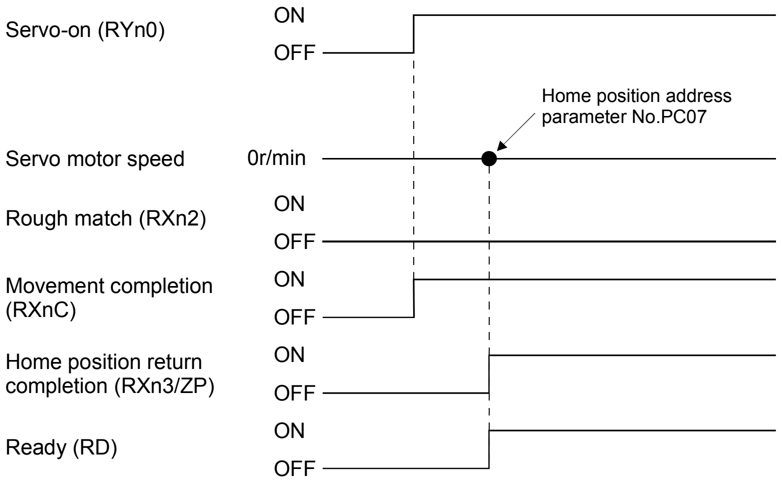

The parameter No.PC07 (home position return position data) setting value is the positioning address after the home position return is completed.

5.6.7 Dog type rear end reference home position return

POINT

- This home position return method depends on the timing of reading Proximity dog (DOG) that has detected the rear end of a proximity dog. Hence, if a home position return is made at the creep speed of 100r/min, an error of ±400 pulses will occur in the home position. The error of the home position is larger as the creep speed is higher.

The position where the axis, which had started decelerating at the front end of a proximity dog, has moved the after-proximity dog moving distance and home position shift distance after it passed the rear end is defined as a home position. A home position return that does not depend on the Z-phase signal can be made.

(1) Devices, parameters

Set the input devices and parameters as indicated below.

Item	Device/Parameter used	Description
Manual home position return mode selection	Automatic/manual selection (RYn6)	Turn RYn6 ON.
	Point table No. selection 1 to 8 (RYnA to RYnE, RY(n+2)3 to RY(n+2)5)	RYnA to RYnE, RY(n+2)3 to RY(n+2)5 are turned off.
Remote register-based position/speed setting (Only when two stations are occupied)	Position/speed specifying system selection (RY(n+2)A)	Turn RY(n++2)A ON.
Dog type rear end reference home position return	Parameter No.PC02	□□□5: Select the dog type rear end reference.
Home position return direction	Parameter No.PC03	Refer to section 5.6.1 (2) and select the home position return direction.
Dog input polarity	Parameter No.PD16	Refer to section 5.6.1 (2) and select the dog input polarity.
Home position return speed	Parameter No.PC04	Set the speed till the dog is detected.
Creep speed	Parameter No.PC05	Set the speed after the dog is detected.
Home position shift distance	Parameter No.PC06	Set when the home position is moved from where the axis has passed the proximity dog rear end.
Moving distance after proximity dog	Parameter No.PC08	
Home position return acceleration/ deceleration time constants	Point table No.1	Use the acceleration/deceleration time constant of point table No.1.
Home position return position data	Parameter No.PC07	Set the current position at home position return completion.

(2) Timing chart

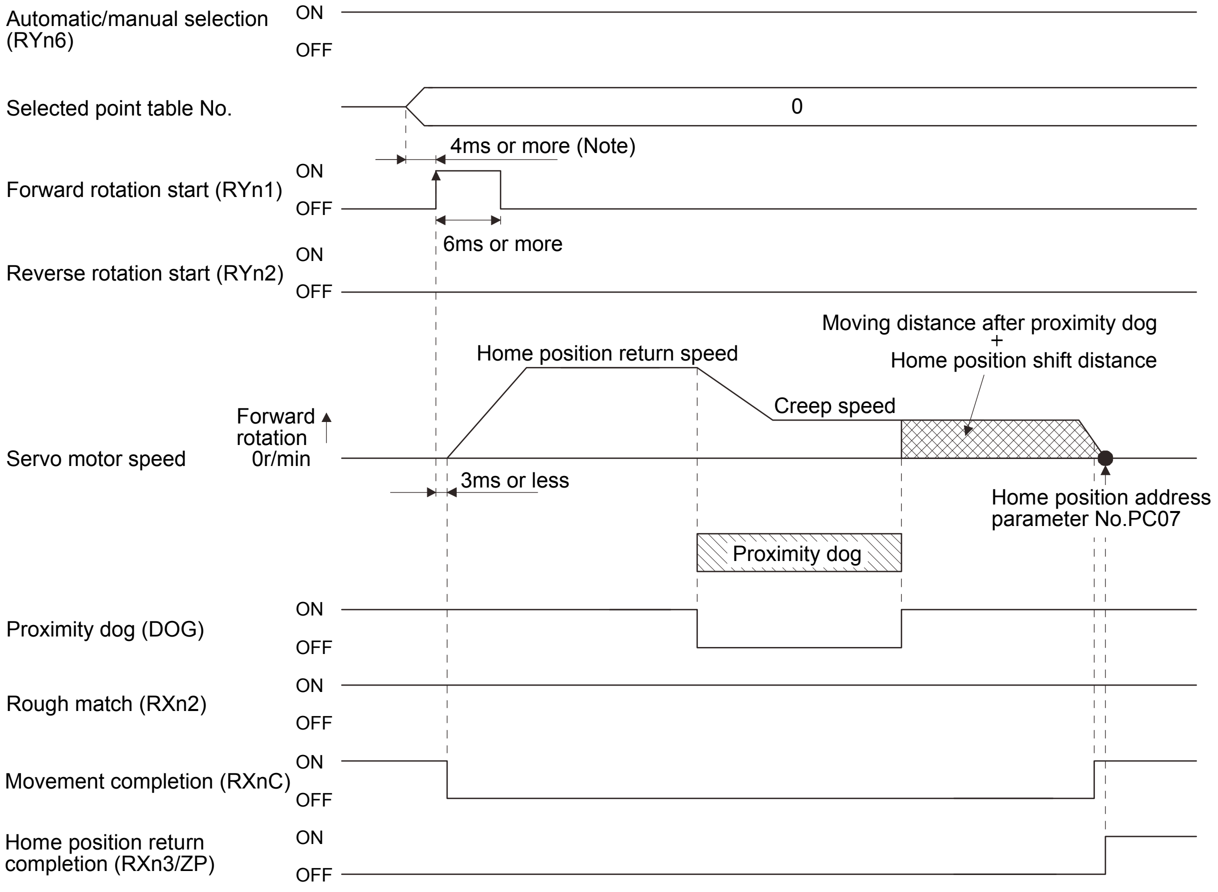

Note. Configure a sequence that changes the point table selection earlier, considering the delay time of CC-Link communication.

The parameter No.PC17 (home position return position data) setting value is the positioning address after the home position return is completed.

5.6.8 Count type front end reference home position return

POINT

- This home position return method depends on the timing of reading Proximity dog (DOG) that has detected the front end of a proximity dog. Hence, if a home position return is made at the home position return speed of 100r/min, an error of ±400 pulses will occur in the home position. The error of the home position is larger as the home position return speed is higher.

The position where the axis, which had started decelerating at the front end of a proximity dog, has moved the after-proximity dog moving distance and home position shift distance is defined as a home position. A home position return that does not depend on the Z-phase signal can be made. The home position may change if the home position return speed varies.

(1) Devices, parameters

Set the input devices and parameters as indicated below.

Item	Device/Parameter used	Description
Manual home position return mode selection	Automatic/manual selection (RYn6)	Turn RYn6 ON.
	Point table No. selection 1 to 8 (RYnA to RYnE, RY(n＋2)3 to RY(n＋2)5)	RYnA to RYnE, RY(n＋2)3 to RY(n＋2)5 are turned off.
Remote register-based position/speed setting (Only when two stations are occupied)	Position/speed specifying system selection (RY(n＋2)A)	Turn RY(n＋2)A ON.
Count type dog front end reference home position return	Parameter No.PC02	□□□6: Select the count type dog front end reference.
Home position return direction	Parameter No.PC03	Refer to section 5.6.1 (2) and select the home position return direction.
Dog input polarity	Parameter No.PD16	Refer to section 5.6.1 (2) and select the dog input polarity.
Home position return speed	Parameter No.PC04	Set the speed till the dog is detected.
Creep speed	Parameter No.PC05	Set the speed after the dog is detected.
Home position shift distance	Parameter No.PC06	Set when the home position is moved from where the axis has passed the proximity dog front end.
Moving distance after proximity dog	Parameter No.PC08	
Home position return acceleration/ deceleration time constants	Point table No.1	Use the acceleration/deceleration time constant of point table No.1.
Home position return position data	Parameter No.PC07	Set the current position at home position return completion.

(2) Timing chart

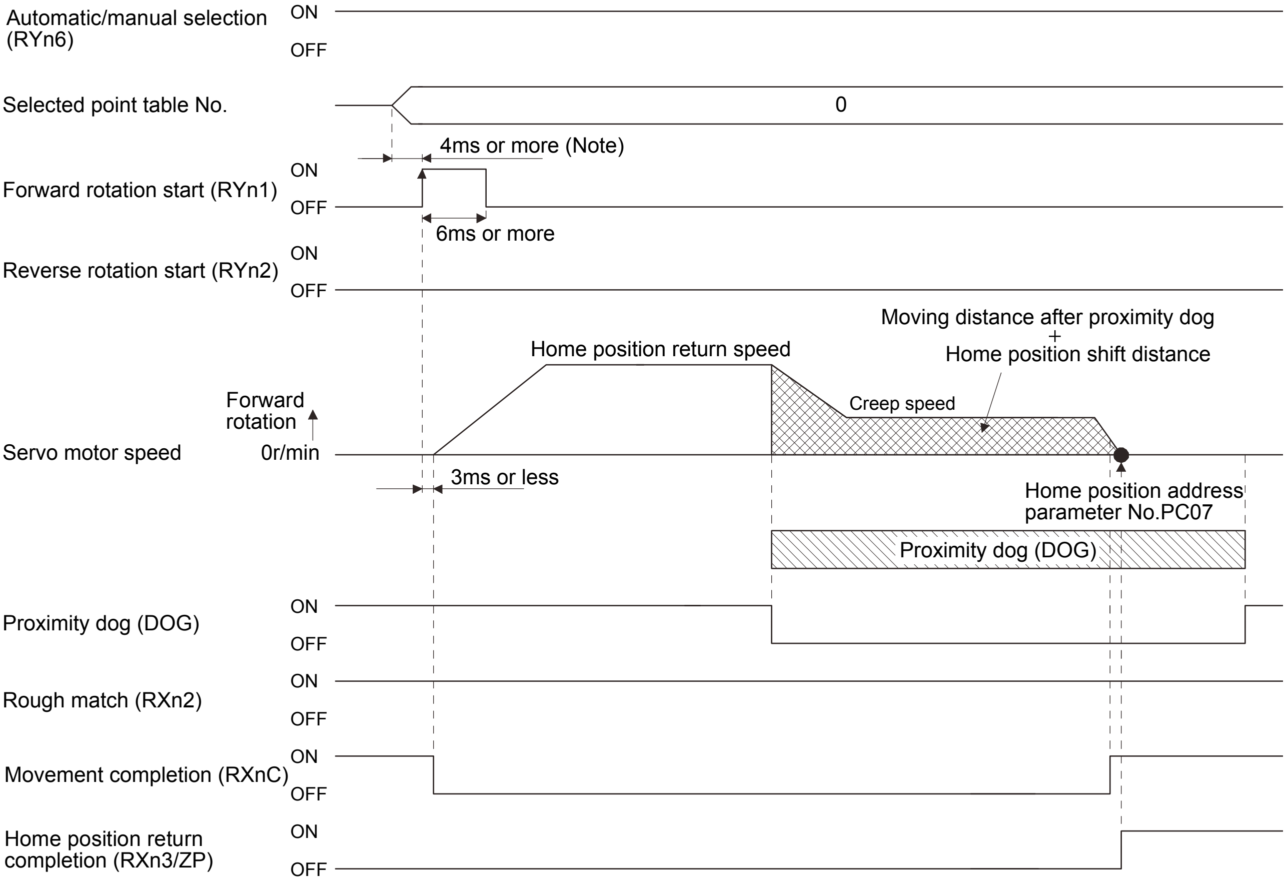

Note. Configure a sequence that changes the point table selection earlier, considering the delay time of CC-Link communication.

The parameter No.PC07 (home position return position data) setting value is the positioning address after the home position return is completed.

5.6.9 Dog cradle type home position return

The position where the first Z-phase signal is issued after detection of the proximity dog front end can be defined as a home position.

(1) Devices, parameters

Set the input devices and parameters as indicated below.

Item	Device/Parameter used	Description
Manual home position return mode selection	Automatic/manual selection (RYn6)	Turn RYn6 ON.
	Point table No. selection 1 to 8 (RYnA to RYnE, RY(n＋2)3 to RY(n＋2)5)	RYnA to RYnE, RY(n＋2)3 to RY(n＋2)5 are turned off.
Remote register-based position/speed setting (Only when two stations are occupied)	Position/speed specifying system selection (RY(n＋+2)A)	Turn RY(n＋2)A ON.
Dog cradle type home position return	Parameter No.PC02	□□□7: Select the dog cradle type.
Home position return direction	Parameter No.PC03	Refer to section 5.6.1 (2) and select the home position return direction.
Dog input polarity	Parameter No.PD16	Refer to section 5.6.1 (2) and select the dog input polarity.
Home position return speed	Parameter No.PC04	Set the speed till the dog is detected.
Creep speed	Parameter No.PC05	Set the speed after the dog is detected.
Home position shift distance	Parameter No.PC06	Set when the home position is moved from the Z-phase signal position.
Home position return acceleration/deceleration time constants	Point table No.1	Use the acceleration/deceleration time constant of point table No.1.
Home position return position data	Parameter No.PC07	Set the current position at home position return completion.

(2) Timing chart

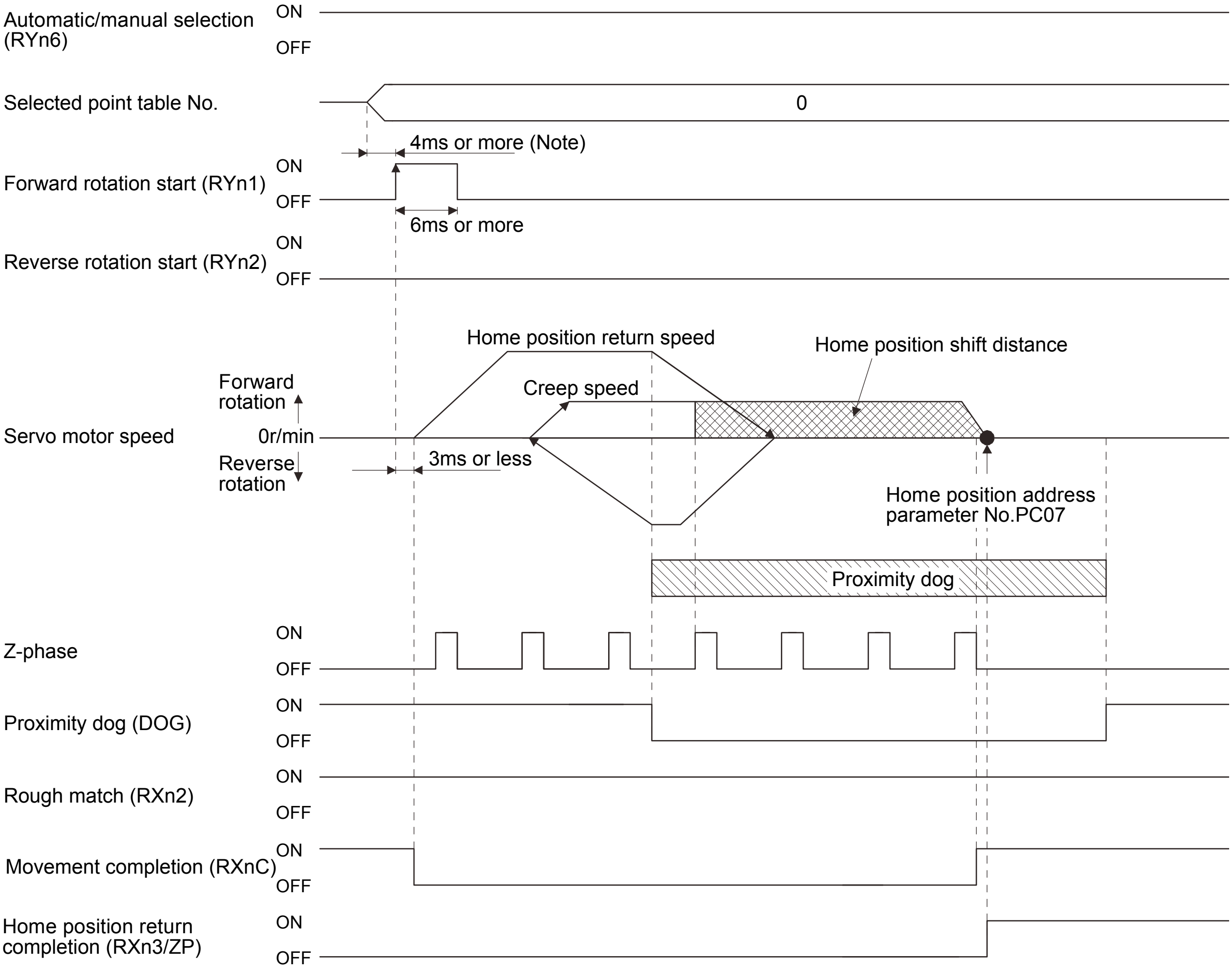

Note. Configure a sequence that changes the point table selection earlier, considering the delay time of CC-Link communication.

The parameter No.PC07 (home position return position data) setting value is the positioning address after the home position return is completed.

5.6.10 Dog type first Z-phase reference home position return

After the proximity dog front end is detected, the current position moves in the reverse direction at creep speed. After this moving away from the proximity dog, the home position is determined to be where the first Z-phase pulse is issued.

(1) Devices, parameters

Set the input devices and parameters as indicated below.

Item	Device/Parameter used	Description
Manual home position return mode selection	Automatic/manual selection (RYn6)	Turn RYn6 ON.
	Point table No. selection 1 to 8 (RYnA to RYnE, RY(n＋2)3 to RY(n＋2)5)	RYnA to RYnE, RY(n＋2)3 to RY(n＋2)5 are turned off.
Remote register-based position/speed setting (Only when two stations are occupied)	Position/speed specifying system selection (RY(n＋2)A)	Turn RY(n＋2)A ON.
Dog cradle type home position return	Parameter No.PC02	□□□8: Select the dog cradle type.
Home position return direction	Parameter No.PC03	Refer to section 5.6.1 (2) and select the home position return direction.
Dog input polarity	Parameter No.PD16	Refer to section 5.6.1 (2) and select the dog input polarity.
Home position return speed	Parameter No.PC04	Set the speed till the dog is detected.
Creep speed	Parameter No.PC05	Set the speed after the dog is detected.
Home position shift distance	Parameter No.PC06	Set when the home position is moved from the Z-phase signal position.
Home position return acceleration/deceleration time constants	Point table No.1	Use the acceleration/deceleration time constant of point table No.1.
Home position return position data	Parameter No.PC07	Set the current position at home position return completion.

(2) Timing chart

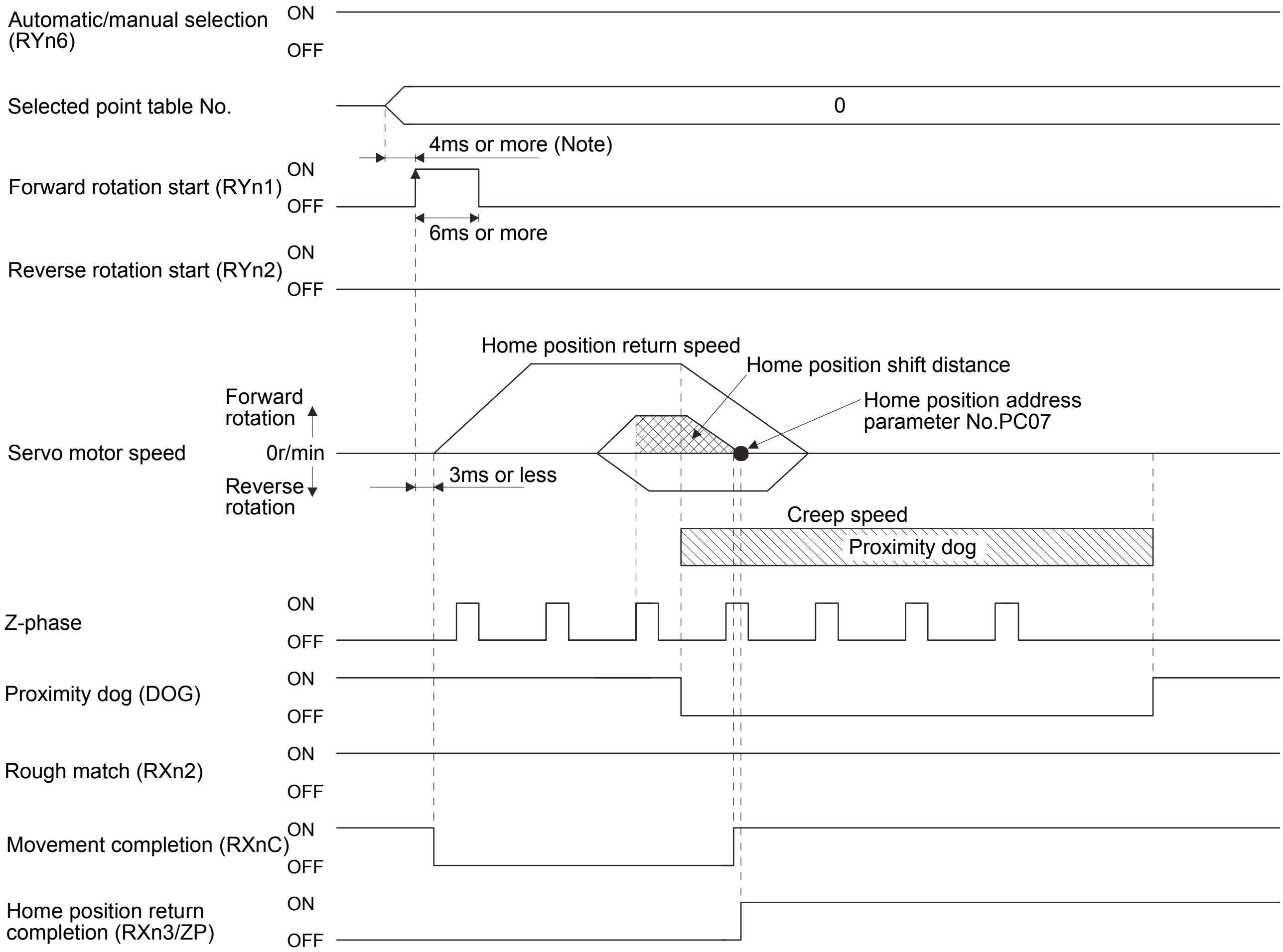

Note. Configure a sequence that changes the point table selection earlier, considering the delay time of CC-Link communication.

The parameter No.PC07 (home position return position data) setting value is the positioning address after the home position return is completed.

5.6.11 Dog type front end reference home position return method

POINT

- This home position return method depends on the timing of reading Proximity dog (DOG) that has detected the front end of a proximity dog. Hence, if a home position return is made at the creep speed of 100r/min, an error of ±400 pulses will occur in the home position. The error of the home position is larger as the creep speed is higher.

Starting from the front end of the proximity dog, the position is shifted by the travel distance after proximity dog and the home position shift distance. A home position return that does not depend on the Z-phase signal can be made. Changing the creep speed may change the home position.

(1) Devices, parameters

Set the input devices and parameters as indicated below.

Item	Device/Parameter used	Description
Manual home position return mode selection	Automatic/manual selection (RYn6)	Turn RYn6 ON.
	Point table No. selection 1 to 8 (RYnA to RYnE, RY(n＋2)3 to RY(n＋2)5)	RYnA to RYnE, RY(n＋2)3 to RY(n＋2)5 are turned off.
Remote register-based position/speed setting (Only when two stations are occupied)	Position/speed specifying system selection (RY(n＋2)A)	Turn RY(n＋2)A ON.
Dog cradle type home position return	Parameter No.PC02	□□□9: Select the dog cradle type.
Home position return direction	Parameter No.PC03	Refer to section 5.6.1 (2) and select the home position return direction.
Dog input polarity	Parameter No.PD16	Refer to section 5.6.1 (2) and select the dog input polarity.
Home position return speed	Parameter No.PC04	Set the speed till the dog is detected.
Creep speed	Parameter No.PC05	Set the speed after the dog is detected.
Home position shift distance	Parameter No.PC06	Set when the home position is moved from where the axis has passed the proximity dog front end.
Travel distance after proximity dog	Parameter No.PC08	
Home position return acceleration/deceleration time constants	Point table No.1	Use the acceleration/deceleration time constant of point table No.1.
Home position return position data	Parameter No.PC07	Set the current position at home position return completion.

(2) Timing chart

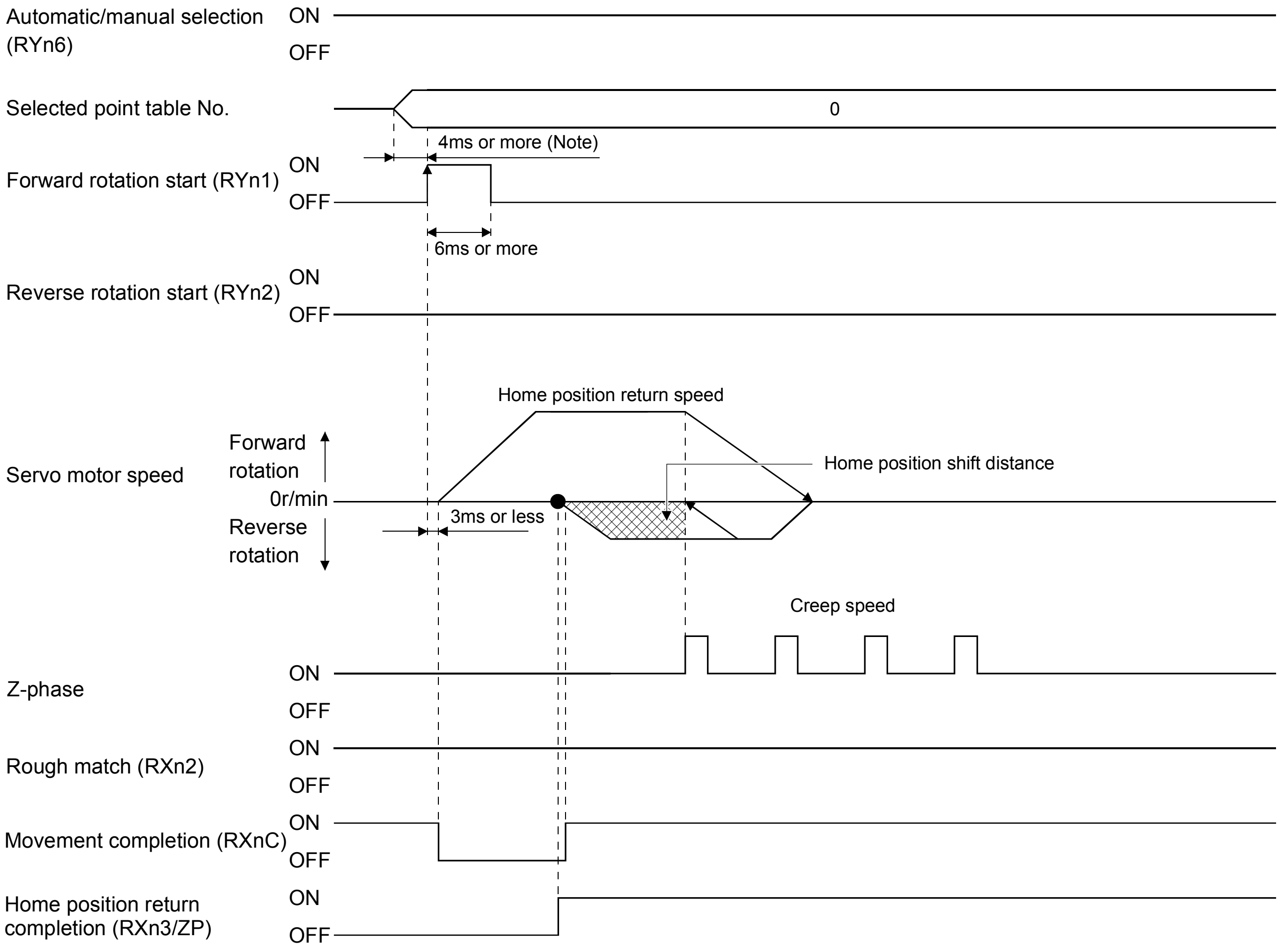

Note. Configure a sequence that changes the point table selection earlier, considering the delay time of CC-Link communication.

The parameter No.PC07 (home position return position data) setting value is the positioning address after the home position return is completed.

5.6.12 Dogless Z-phase reference home position return method

The home position is determined to be where the first Z-phase pulse is issued after the home position return is started.

(1) Devices, parameters

Set the input devices and parameters as indicated below.

Item	Device/Parameter used	Description
Manual home position return mode selection	Automatic/manual selection (RYn6)	Turn RYn6 ON.
	Point table No. selection 1 to 8 (RYnA to RYnE, RY(n+2)3 to RY(n+2)5)	RYnA to RYnE, RY(n+2)3 to RY(n+2)5 are turned off.
Remote register-based position/speed setting (Only when two stations are occupied)	Position/speed specifying system selection (RY(n+2)A)	Turn RY(n+2)A ON.
Dog cradle type home position return	Parameter No.PC02	□□□A: Select the dog cradle type.
Home position return direction	Parameter No.PC03	Refer to section 5.6.1 (2) and select the home position return direction.
Home position return speed	Parameter No.PC04	Set the speed till the Z-phase is detected.
Creep speed	Parameter No.PC05	Set the speed after the Z-phase is detected.
Home position shift distance	Parameter No.PC06	Set when the home position is moved from the Z-phase signal position.
Home position return acceleration/deceleration time constants	Point table No.1	Use the acceleration/deceleration time constant of point table No.1.
Home position return position data	Parameter No.PC07	Set the current position at home position return completion.

(2) Timing chart

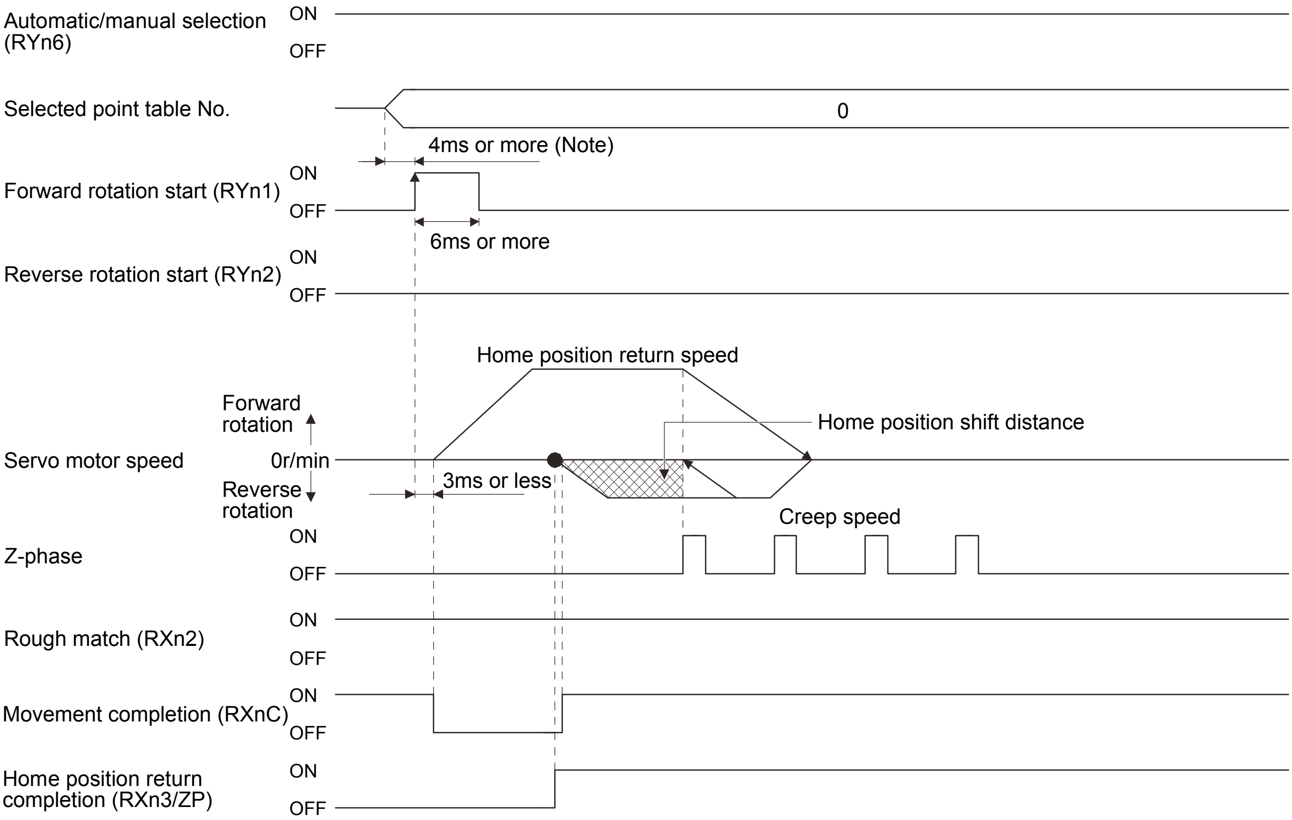

Note. Configure a sequence that changes the point table selection earlier, considering the delay time of CC-Link communication.

The parameter No.PC07 (home position return position data) setting value is the positioning address after the home position return is completed.

5.6.13 Home position return automatic return function

If the current position is at or beyond the proximity dog in the home position return using the proximity dog, this function starts home position return after making a return to the position where the home position return can be made.

(1) When the current position is at the proximity dog

When the current position is at the proximity dog, an automatic return is made before home position return.

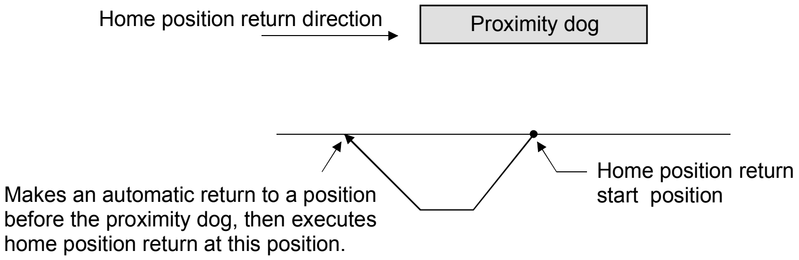

(2) When the current position is beyond the proximity dog

At a start, a motion is made in the home position return direction and an automatic return is made on detection of the stroke end (LSP or LSN). The motion stops past the front end of the proximity dog, and home position return is resumed at that position. If the proximity dog cannot be detected, the motion stops on detection of the LSP or LSN switch and A90 occurs.

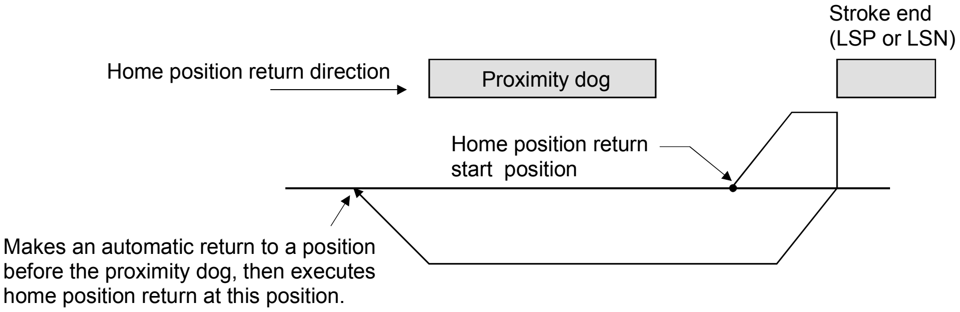

Software limit cannot be used with these functions.

5.6.14 Automatic positioning function to the home position

POINT

- You cannot perform automatic positioning from outside the position data setting range to the home position. In this case, make a home position return again using a manual home position return.

If this function is used when returning to the home position again after performing a manual home position return after a power-on and deciding the home position, automatic positioning can be carried out to the home position at high speed. In an absolute position detection system, manual home position return is not required after power-on.

Please perform a manual home position return beforehand after a power-on.

Set the input signals and parameter as follows.

Item	Device/Parameter used	Description
Manual home position return mode selection	Automatic/manual selection (RYn6)	Turn RYn6 ON.
	Point table No. selection 1 to 8 (RYnA to RYnE, RY(n+2)3 to RY(n+2)5)	RYnA to RYnE, RY(n+2)3 to RY(n+2)5 are turned off.
Home position return speed	Parameter No.PC04	Set the speed till the dog is detected.
Home position return acceleration/deceleration time constants	Point table No.1	Use the acceleration/deceleration time constant of point table No.1.

Set up the home position return speed of the automatic positioning function to the home position by parameter No.PC04. Use the data of point table No.1 to set the acceleration time constant and deceleration time constant. When reverse rotation start (RYn2) is ON, it will position automatically at the home position.

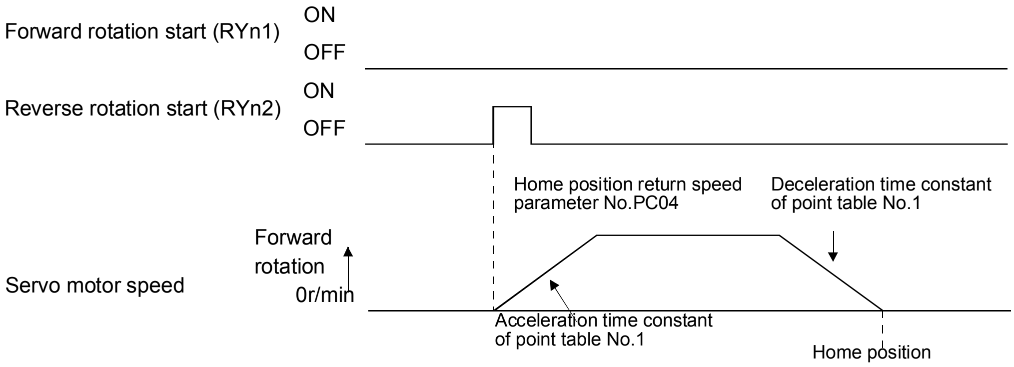

5.7 Roll feed display function in roll feed mode

With the roll feed display function, the servo amplifier can operate in the roll feed mode. The roll feed mode uses the incremental system.

(1) Parameter settings

No.	Name	Digit to be set	Setting item	Setting value	Description
PA03	Absolute position detection system	□□□■	Operation system	□□□0 (initial value)	Make sure to set the incremental system. The absolute position detection system cannot be used.
PC28	Function selection C-7	□□■■	Selection between current position display and command position display Electronic gear fraction clear selection	□□1 1	Select roll feed display. Enable the electronic gear fraction clear.

(2) Roll feed display function

At start up, the roll feed display function clears the status display of the current position and command position to zero.

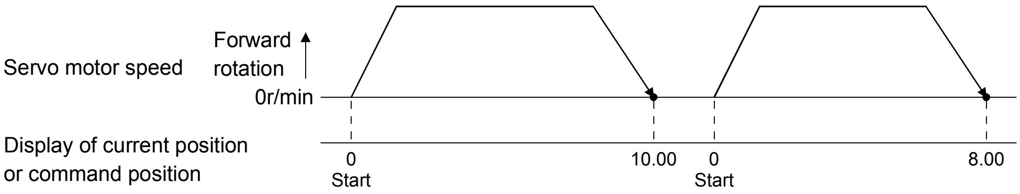

(3) Operation procedure

Changes are made only on the status display of the current position and commanded position. The same operation procedure as that in each operation mode can be used.

Operation procedure		Details
Automatic operation	Automatic operation according to the point table	Section 5.4.2
Manual operation	JOG operation	Section 5.5.1
	Manual pulse generator operation	Section 5.5.2
Home position return mode		Section 5.6

5.8 Absolute position detection system

⚠CAUTION

- If an absolute position erase alarm (A25) or an absolute position counter warning (AE3) has occurred, always perform home position setting again. Not doing so may cause unexpected operation.

POINT

- If the encoder cable is disconnected, absolute position data will be lost in the following servo motor series. HF-MP, HF-KP, HF-SP, HC-RP, HC-UP, HC-LP, HA-LP and HF-JP. After disconnecting the encoder cable, always execute home position setting and then positioning operation.
- When the following parameters are changed, the home position is lost when turning on the power after the change. Execute the home position return again when turning on the power.
  - Parameter No.PA06 (Electronic gear numerator)
  - Parameter No.PA07 (Electronic gear denominator)
  - Parameter No.PA14 (Rotation direction selection)
  - Parameter No.PC07 (Home position return position data)

This servo amplifier has a built-in a single-axis controller, and all servo motor encoders are compatible with absolute position detection system. Hence, mounting an absolute position data backup battery and setting parameters enable absolute position detection system to be configured.

(1) Restrictions

An absolute position detection system cannot be configured under the following conditions.

1) Stroke-less coordinate system, e.g. rotary shaft, infinite positioning.

2) Operation performed in incremental value command type positioning system.

(2) Specifications

Item	Description
System	Electronic battery backup system.
Battery	1 piece of lithium battery (primary battery, nominal + 3.6V) Type: MR-J3BAT
Maximum revolution range	Home position ± 32767 rev.
(Note 1) Maximum speed at power failure	3000r/min
(Note 2) Battery backup time	Approx. 10,000 hours (battery life with power off)
(Note 3) Battery life	5 years from date of manufacture

Note 1. Maximum speed available when the shaft is rotated by external force at the time of power failure or the like.

2. Time to hold data by a battery with power off. Replace the batteries within three years since the operation start regardless of the power supply on/off. If the battery is used out of specification, the absolute position erased (A25) may occur.

3. Quality of battery degrades by the storage condition. It is recommended that the battery be used within two years from the date of manufacture. The life of battery is five years from the date of manufacture regardless of the connection.

(3) Structure

Component	Description
Servo amplifier	Use standard models.
Servo motor	
Battery	MR-J3BAT
Encoder cable	Use an encoder cable. (Refer to section 14.1.)

(4) Parameter setting

Set parameter No.PA03 (absolute position detection system) as shown below to enable the absolute position detection system.

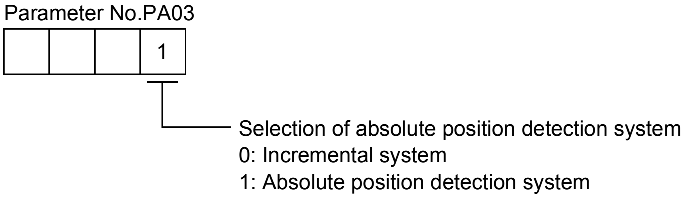

5.8.1 Outline of absolute position detection data communication

For normal operation, as shown below, the encoder consists of a detector designed to detect a position within one revolution and a cumulative revolution counter designed to detect the number of revolutions.

The absolute position detection system always detects the absolute position of the machine and keeps it battery-backed, independently of whether the general-purpose programmable controller power is on or off. Therefore, once the home position is defined at the time of machine installation, home position return is not needed when power is switched on thereafter.

If a power failure or a fault occurs, restoration is easy.

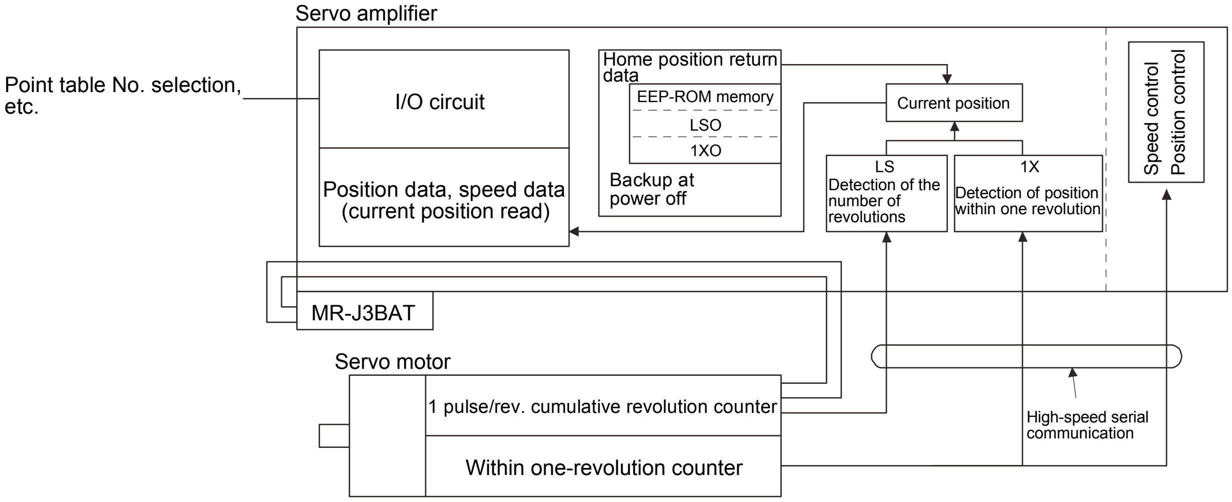

5.8.2 Battery replacement procedure

⚠ WARNING	- Before replacing a battery, turn off the main circuit power and wait for 15 minutes or more until the charge lamp turns off. Then, confirm that the voltage between P(＋) and N(－) is safe with a voltage tester and others. Otherwise, an electric shock may occur. In addition, always confirm from the front of the servo amplifier whether the charge lamp is off or not.

POINT

- The internal circuits of the servo amplifier may be damaged by static electricity. Always take the following precautions.
  - Ground human body and work bench.
  - Do not touch the conductive areas, such as connector pins and electrical parts, directly by hand.

(1) When replacing battery with the control circuit power on

POINT

- Replacing battery with the control circuit power off will erase the absolute position data.

Replacing battery with the control circuit power on will not erase the absolute position data. Refer to section 5.8.3 for mounting procedure of battery to the servo amplifier.
To replace battery with the control circuit power off, refer to section (2).

(2) When replacing battery with the control circuit power off

Replacing battery with the control circuit power off will erase the absolute position data, but battery can be replaced without erasing the absolute position data in the following procedure.
In this procedure, MR-J3BTCBL03M battery connection cable is required.
MR-J3BTCBL03M cannot be added after home position is set. Make sure to connect MR-J3BTCBL03M between the servo amplifier and the encoder cable when connecting up the encoder cable.
Refer to section 5.8.4 for the replacement procedure of the battery.

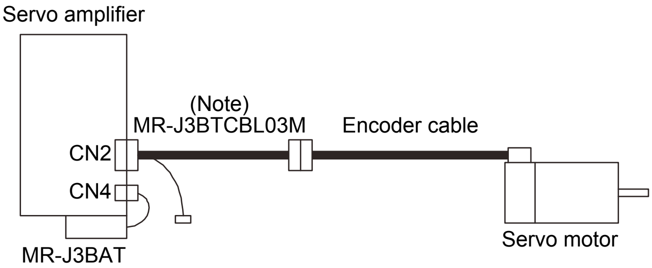

Note. Make sure to connect MR-J3BTCBL03M when connecting the encoder cable.

5.8.3 Battery installation procedure

POINT

- For the servo amplifier with a battery holder on the bottom, it is not possible to wire for the earth with the battery installed. Insert the battery after executing the earth wiring of the servo amplifier.

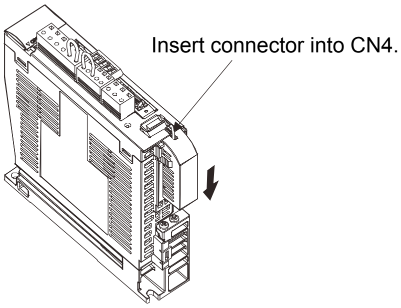

For MR-J3-350T or less・MR-J3-200T4 or less

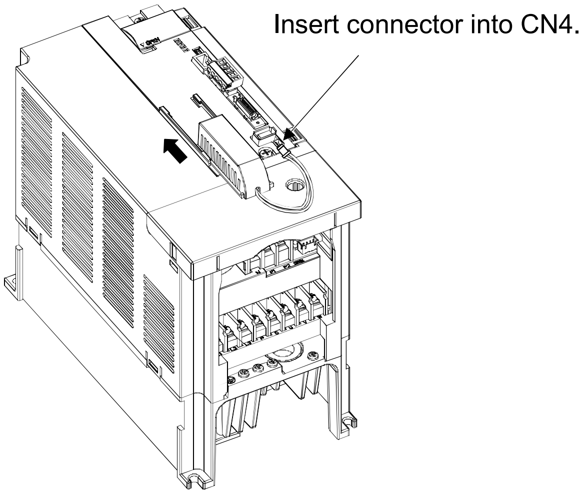

For MR-J3-500T or more・MR-J3-350T4 or more

5.8.4 Procedure to replace battery with the control circuit power off

(1) Preparation for battery replacement

For the battery replacement, a backup battery is required separately from the battery to be replaced. Prepare the following batteries.

Product name	Applications/Quantity	Remarks
MR-J3BAT	1 for backup	Battery within two years from the date of manufacture
	1 for replacing	

(2) Replacement procedure

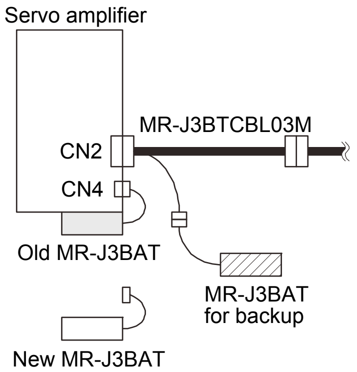

Step 1

Connect MR-J3BAT for backup to the battery connector of MR-J3BTCBL03M.

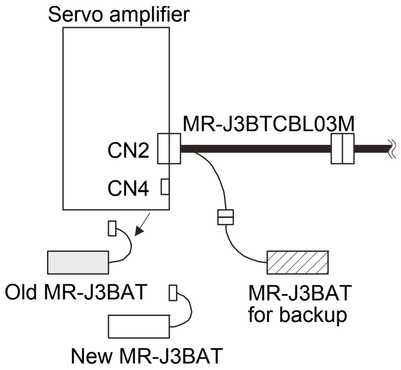

Step 2

Remove old MR-J3BAT from the servo amplifier.

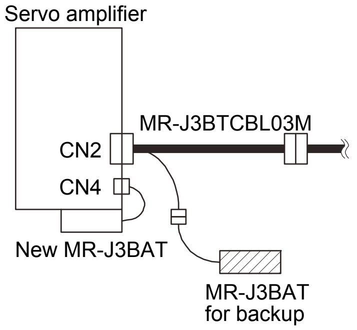

Step 3

Mount new MR-J3BAT to the servo amplifier.

Then, connect the lead wire plug of MR-J3BAT to the C4 connector of the servo amplifier.

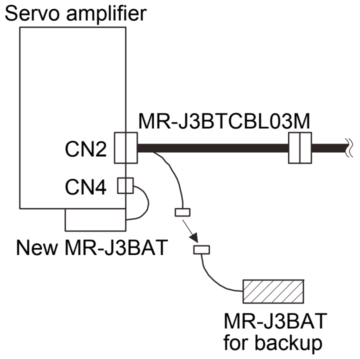

Step 4

Remove the MR-J3BAT for backup from the battery connector of MR-J3BTCBL03M, and the procedure is completed.

MEMO

6. PARAMETERS

⚠ CAUTION

- Never adjust or change the parameter values extremely as it will make operation instable.
- If fixed values are written in the digits of a parameter, do not change these values.
- Do not change parameters for manufacturer setting.
- Do not set any values other than the described setting values to each parameter.

POINT

- For any parameter whose symbol is preceded by *, set the parameter value and switch power off once, then switch it on again to make that parameter setting valid.

In this servo amplifier, the parameters are classified into the following groups on a function basis.

Parameter group	Main description
Basic setting parameters (No.PA□□)	Make basic setting with these parameters. Generally, the operation is possible only with these parameter settings.
Gain/filter parameters (No.PB□□)	Use these parameters when making gain adjustment manually.
Extension setting parameters (No.PC□□)	These parameters are inherent to the MR-J3-□T servo amplifier.
I/O setting parameters (No.PD□□)	Use these parameters when changing the I/O devices of the servo amplifier.

Mainly setting the basic setting parameters (No.PA□□) allows the setting of the basic parameters at the time of introduction.

6.1 Basic setting parameters (No.PA□□)

6.1.1 Parameter list

No.	Symbol	Name	Initial value	Unit
PA01	*STY	Control mode	0000h	
PA02	*REG	Regenerative option	0000h	
PA03	*ABS	Absolute position detection system	0000h	
PA04	*AOP1	Function selection A-1	0000h	
PA05	*FTY	Feeding function selection	0000h	
PA06	*CMX	Electronic gear numerator	1	
PA07	*CDV	Electronic gear denominator	1	
PA08	ATU	Auto tuning mode	0001h	
PA09	RSP	Auto tuning response	12	
PA10	INP	In-position range	100	µm
PA11	TLP	Forward rotation torque limit	100.0	%
PA12	TLN	Reverse rotation torque limit	100.0	%
PA13		For manufacturer setting	0002h	
PA14	*POL	Rotation direction selection	0	
PA15	*ENR	Encoder output pulses	4000	pulse/rev
PA16		For manufacturer setting	0	
PA17			0000h	
PA18			0000h	
PA19	*BLK	Parameter write inhibit	000Ch	

6.1.2 Parameter write inhibit

Parameter			Initial value	Unit	Setting range
No.	Symbol	Name			
PA19	*BLK	Parameter write inhibit	000Ch		Refer to the text.

> **POINT**
>
> - This parameter is made valid when power is switched off, then on after setting.

In the factory setting, this servo amplifier allows changes to the basic setting parameter, gain/filter parameter and extension setting parameter settings. With the setting of parameter No.PA19, write can be disabled to prevent accidental changes.

The following table indicates the parameters which are enabled for reference and write by the setting of parameter No.PA19. Operation can be performed for the parameters marked ○ .

Parameter No.PA19 setting	Setting operation	Basic setting parameters No.PA□□	Gain/Filter parameters No.PB□□	Extension setting parameters No.PC□□	I/O setting parameters No.PD□□
0000h	Reference	○			
	Write	○			
000Bh	Reference	○	○	○	
	Write	○	○	○	
000Ch (initial value)	Reference	○	○	○	○
	Write	○	○	○	○
100Bh	Reference	○			
	Write	Parameter No. PA19 only			
100Ch	Reference	○	○	○	○
	Write	Parameter No. PA19 only			

6.1.3 Selection of command method and maximum torque of the HF-KP series servo motor

Parameter			Initial value	Unit	Setting range
No.	Symbol	Name			
PA01	*STY	Control mode	0000h		Refer to the text.

POINT

- This parameter is made valid when power is switched off, then on after setting.
- HF-KP series geared servo motors and servo motors except the HF-KP series do not support the 350% maximum torque setting. When these servo motors are used, enabling the 350% maximum torque setting causes parameter error (A37).
- The 350% maximum torque setting is available with the HF-KP series servo motor manufactured in June 2009 or later. When the HF-KP series servo motors manufactured earlier than June 2009 are used, enabling the 350% maximum torque setting causes parameter error (A37).

Select the 350% maximum torque setting and command method for the HF-KP series servo motors. When the 350% maximum torque setting is enabled, the maximum torque of the HF-KP series servo motor can be increased from 300% to 350%. To operate at the maximum torque of 350%, operate within the range of overload protection characteristic. If operated beyond the overload protection characteristic range, servo motor overheat (A46), overload 1 (A50), overload 2 (A51) may occur.

Parameter No.PA01

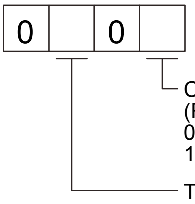

Command method selection
(Refer to section 5.4.)
0: Absolute value command method
1: Incremental value command method

The maximum torque of HF-KP series servo motor to 350%
0: Invalid
3: Valid
Setting of this digit is available with servo amplifiers with software version A8 or later.

6.1.4 Selection of regenerative option

Parameter			Initial value	Unit	Setting range
No.	Symbol	Name			
PA02	*REG	Regenerative option	0000h		Refer to the text.

POINT

- This parameter is made valid when power is switched off, then on after setting.
- Wrong setting may cause the regenerative option to burn.
- If the regenerative option selected is not for use with the servo amplifier, parameter error (A37) occurs.

Set this parameter when using the regenerative option, brake unit, power regeneration converter, or power regeneration common converter.

Parameter No.PA02

0	0		

Selection of regenerative option
00: Regenerative option is not used
- For servo amplifier of 100W, regenerative resistor is not used.
- For servo amplifier of 200 to 7kW, built-in regenerative resistor is used.
- Supplied regenerative resistors or regenerative option is used with the servo amplifier of 11k to 22kW.

01: FR-BU2-(H)・FR-RC-(H)・FR-CV-(H)
02: MR-RB032
03: MR-RB12
04: MR-RB32
05: MR-RB30
06: MR-RB50(Cooling fan is required)
08: MR-RB31
09: MR-RB51(Cooling fan is required)
80: MR-RB1H-4
81: MR-RB3M-4(Cooling fan is required)
82: MR-RB3G-4(Cooling fan is required)
83: MR-RB5G-4(Cooling fan is required)
84: MR-RB34-4(Cooling fan is required)
85: MR-RB54-4(Cooling fan is required)
FA: When the supplied regenerative resistor or the regenerative option is cooled by the cooling fan to increase the ability with the servo amplifier of 11k to 22kW

6.1.5 Using absolute position detection system

Parameter			Initial value	Unit	Setting range
No.	Symbol	Name			
PA03	*ABS	Absolute position detection system	0000h		Refer to the text.

POINT

- This parameter is made valid when power is switched off, then on after setting.

Set this parameter when using the absolute position detection system.

Parameter No.PA03

0	0	0	

Selection of absolute position detection system (refer to section 5.7)
0: Used in incremental system
1: Used in absolute position detection system

6.1.6 Follow-up for absolute value command system in incremental system

Parameter			Initial value	Unit	Setting range
No.	Symbol	Name			
PA04	*AOP1	Function selection A-1	0000h		Refer to the text.

POINT

- This parameter is made valid when power is switched off, then on after setting.

If this parameter is made valid, the home position is not lost in the servo-off or forced stop state, and the operation can be resumed when the servo-on (RYn0) or forced stop (EMG) is deactivated.

Parameter No.PA04

0	0	0	

Servo-on (RYn0) -off, forced stop (EMG) -off follow-up for absolute value command in incremental system
0: Invalid
1: Valid
Normally, when this servo amplifier is used in the absolute value command method of the incremental system, placing it in a servo off or forced stop status will erase the home position. When "1" is set in this parameter, the home position will not be erased if the servo amplifier is placed in a servo-off or forced stop status or if the alarm that can be deactivated by resetting occurs. The operation can be resumed when the servo-on (RYn0) or forced stop (EMG) is deactivated or an alarm is deactivated by resetting (RES).

6.1.7 Feeding function selection

Parameter			Initial value	Unit	Setting range
No.	Symbol	Name			
PA05	*FTY	Feeding function selection	0000h		Refer to the text.

POINT

- This parameter is made valid when power is switched off, then on after setting.

Select the feed length multiplication, the manual pulse generator input multiplication, and the servo motor speed setting unit.

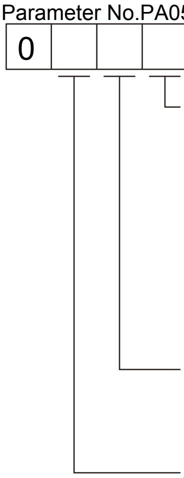

Setting value	Feed length multiplication factor (STM) [times]	Feed unit [μm]	Position data input range [mm]	
			Absolute value command system	Incremental value command system
0	1	1	-999.999 to +999.999	0 to +999.999
1	10	10	-9999.99 to +9999.99	0 to +9999.99
2	100	100	-99999.9 to +99999.9	0 to +99999.9
3	1000	1000	-999999 to +999999	0 to +999999

Manual pulse generator multiplication factor
0: 1 time
1: 10 times
2: 100 times

Servo motor speed setting unit selection
0: 1r/min unit
1: 0.1r/min unit
Setting to "1" will be as follows.
- The setting value of the servo motor speed will be limited to 6553.5r/min.
- The "Servo motor speed" status will be displayed as 0.1r/min unit.

Setting of this digit is available with servo amplifiers with software version A4 or later.

6.1.8 Electronic gear

Parameter			Initial value	Unit	Setting range
No.	Symbol	Name			
PA06	*CMX	Electronic gear numerator	1		0 to 65535
PA07	*CDV	Electronic gear denominator	1		1 to 65535

⚠ **CAUTION**

- False setting will result in unexpected fast rotation, causing injury.

POINT

- This parameter is made valid when power is switched off, then on after setting.
- The range of the electronic gear setting is $\frac{1}{10} < \frac{CMX}{CDV} < 2000$. If you set any value outside this range, a parameter error (A37) occurs.
- Setting "0" in parameter No.PA06 automatically sets the encoder resolution pulse.

(1) Concept of electronic gear

Use the electronic gear (parameters No.PA06, PA07) to make adjustment so that the servo amplifier setting matches the moving distance of the machine. Also, by changing the electronic gear value, the machine can be moved at any multiplication ratio to the moving distance on the servo amplifier.

$$\frac{CMX}{CDV} = \frac{\text{Parameters No.PA06}}{\text{Parameters No.PA07}}$$

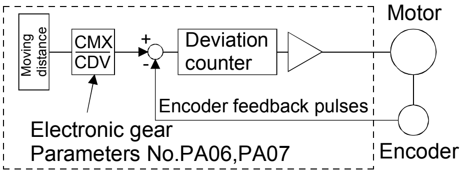

The following examples are used to explain how to calculate the electronic gear value.

POINT

- The following specification symbols are needed for electronic gear calculation.

Pb : Ball screw lead [mm]
1/n : Reduction ratio
Pt : Servo motor encoder resolution [pulse/rev]
ΔS : Travel per servo motor revolution [mm/rev]

(a) Ball screw setting example

Machine specifications

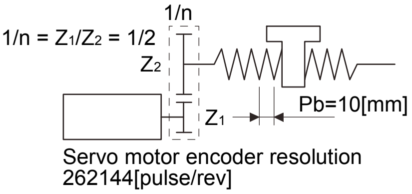

Ball screw lead: $P_b = 10$ [mm]

Reduction ratio: $1/n = Z_1/Z_2 = 1/2$

Z_1: Number of gear teeth on servo motor side

Z_2: Number of gear teeth on load side

Servo motor encoder resolution: $P_t = 262144$ [pulse/rev]

$$\frac{CMX}{CDV} = \frac{p_t}{\Delta S} = \frac{p_t}{n \cdot p_b \cdot 1000} = \frac{262144}{1/2 \cdot 10 \cdot 1000} = \frac{262144}{5000} = \frac{32768}{625}$$

Hence, set 32768 to CMX and 625 to CDV.

(b) Conveyor setting example

Machine specifications

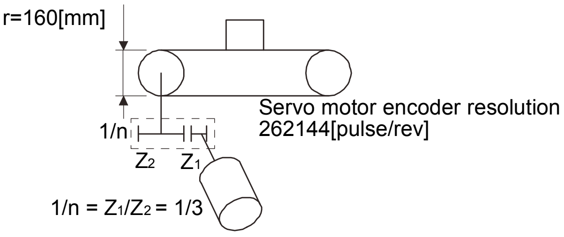

Pulley diameter: r = 160 [mm]

Reduction ratio: 1/n = Z_1/Z_2=1/3

Z_1: Number of gear teeth on servo motor side

Z_2: Number of gear teeth on load side

Servo motor encoder resolution: P_t = 262144 [pulse/rev]

$$\frac{CMX}{CDV} = \frac{p_t}{\Delta S} = \frac{p_t}{n \cdot r \cdot \pi \cdot 1000} = \frac{262144}{1/3 \cdot 160 \cdot \pi \cdot 1000} = \frac{262144}{167551.61} \fallingdotseq \frac{32768}{20944}$$

Reduce CMX and CDV to the setting range or less, and round off the first decimal place.
Hence, set 32768 to CMX and 20944 to CDV.

6.1.9 Auto tuning

Parameter			Initial value	Unit	Setting range
No.	Symbol	Name			
PA08	ATU	Auto tuning mode	0001h		Refer to the text.
PA09	RSP	Auto tuning response	12		1 to 32

Make gain adjustment using auto tuning. Refer to section 9.2 for details.

(1) Auto tuning mode (parameter No.PA08)
Select the gain adjustment mode.

Parameter No.PA08

0 0 0 ☐

Gain adjustment mode setting

Setting	Gain adjustment mode	Automatically set parameter No. (Note)
0	Interpolation mode	PB06・PB08・PB09・PB10
1	Auto tuning mode 1	PB06・PB07・PB08・PB09・PB10
2	Auto tuning mode 2	PB07・PB08・PB09・PB10
3	Manual mode	

Note. The parameters have the following names.

Parameter No.	Name
PB06	Ratio of load inertia moment to servo motor inertia moment
PB07	Model loop gain
PB08	Position loop gain
PB09	Speed loop gain
PB10	Speed integral compensation

(2) Auto tuning response (parameter No.PA09)

If the machine hunts or generates large gear sound, decrease the set value. To improve performance, e.g. shorten the settling time, increase the set value.

Setting	Response	Guideline for machine resonance frequency [Hz]
1	Low response	10.0
2	↑	11.3
3		12.7
4		14.3
5		16.1
6		18.1
7		20.4
8		23.0
9		25.9
10		29.2
11		32.9
12		37.0
13		41.7
14		47.0
15	↓	52.9
16	Middle response	59.6

Setting	Response	Guideline for machine resonance frequency [Hz]
17	Low response	67.1
18	↑	75.6
19		85.2
20		95.9
21		108.0
22		121.7
23		137.1
24		154.4
25		173.9
26		195.9
27		220.6
28		248.5
29		279.9
30		315.3
31	↓	355.1
32	Middle response	400.0

6.1.10 In-position range

Parameter			Initial value	Unit	Setting range
No.	Symbol	Name			
PA10	INP	In-position range	100	μm (pulse)	0 to 10000

Set the range, where In-position (RXn1) and Movement completion (RXnC) are output, in the command pulse unit before calculation of the electronic gear. With the setting of parameter No.PC24, the range can be changed to the encoder output pulse unit. Setting it to the encoder output pulse unit changes the setting unit to pulse.

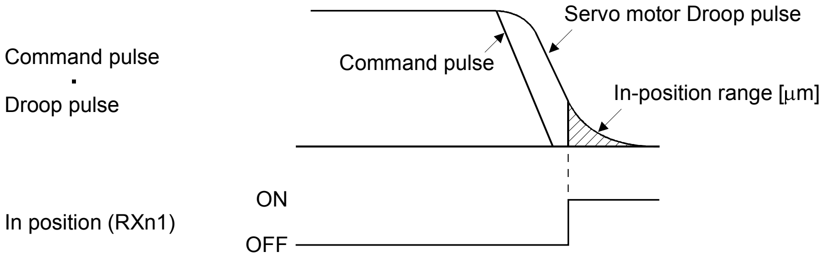

6.1.11 Torque limit

Parameter			Initial value	Unit	Setting range
No.	Symbol	Name			
PA11	TLP	Forward rotation torque limit	100.0	%	0 to 100.0
PA12	TLN	Reverse rotation torque limit	100.0	%	0 to 100.0

The torque generated by the servo motor can be limited.

(1) Forward rotation torque limit (parameter No.PA11)
Set this parameter on the assumption that the maximum torque is 100[%]. Set this parameter when limiting the torque of the servo motor in the CCW driving mode or CW regeneration mode. Set this parameter to "0.0" to generate no torque.

(2) Reverse rotation torque limit (parameter No.PA12)
Set this parameter on the assumption that the maximum torque is 100[%]. Set this parameter when limiting the torque of the servo motor in the CW driving mode or CCW regeneration mode. Set this parameter to "0.0" to generate no torque.

6.1.12 Selection of servo motor rotation direction

Parameter			Initial value	Unit	Setting range
No.	Symbol	Name			
PA14	*POL	Rotation direction selection	0		0・1

POINT

- This parameter is made valid when power is switched off, then on after setting.

Select servo motor rotation direction relative to the input pulse train.

Parameter No.PA14 Setting	Servo Motor Rotation Direction	
	Forward rotation start (Ryn1) ON	Reverse rotation start (Ryn2) ON
0	CCW (Address increase)	CW (Address decrease)
1	CW (Address increase)	CCW (Address decrease)

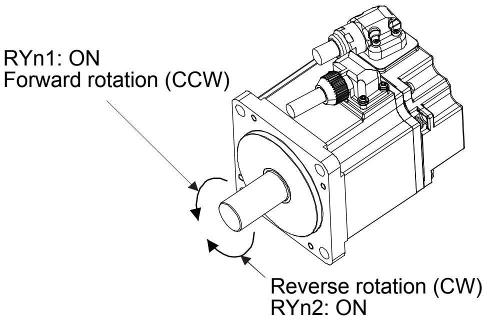

Parameter No. PA14: 0

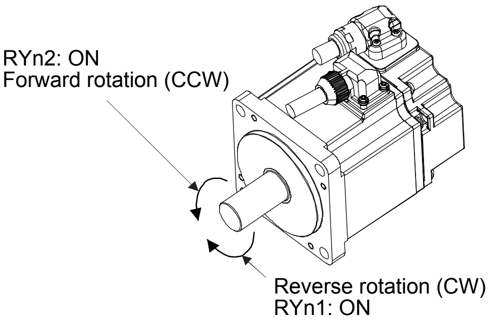

Parameter No. PA14: 1

6.1.13 Encoder output pulse

Parameter			Initial value	Unit	Setting range
No.	Symbol	Name			
PA15	*ENR	Encoder output pulse	4000	pulse/ rev	1 to 65535

POINT

- This parameter is made valid when power is switched off, then on after setting.

Used to set the encoder pulses (A-phase, B-phase) output by the servo amplifier.
Set the value 4 times greater than the A-phase or B-phase pulses.
You can use parameter No.PC19 to choose the output pulse setting or output division ratio setting.
The number of A/B-phase pulses actually output is 1/4 times greater than the preset number of pulses.
The maximum output frequency is 4.6Mpps (after multiplication by 4). Use this parameter within this range.

(1) For output pulse designation

Set " □ □ 0 □ " (initial value) in parameter No.PC19.
Set the number of pulses per servo motor revolution.
Output pulse = set value [pulses/rev]
For instance, set "5600" to Parameter No.PA15, the actually output A/B-phase pulses are as indicated below.

$$\text{A}\cdot\text{B-phase output pulses} = \frac{5600}{4} = 1400[\text{pulse}]$$

(2) For output division ratio setting

Set " □ □ 1 □ " in parameter No.PC19.
The number of pulses per servo motor revolution is divided by the set value.

$$\text{Output pulse} = \frac{\text{Resolution per servo motor revolution}}{\text{Set value}}\ [\text{pulses/rev}]$$

For instance, set "8" to Parameter No.PA15, the actually output A/B-phase pulses are as indicated below.

$$\text{A}\cdot\text{B-phase output pulses} = \frac{262144}{8}\cdot\frac{1}{4} = 8192[\text{pulse}]$$

(3) When outputting pulse train similar to command pulses

Set parameter No.PC19 to "□□2□". The feedback pulses from the servo motor encoder are processed and output as shown below. The feedback pulses can be output in the same pulse unit as the command pulses.

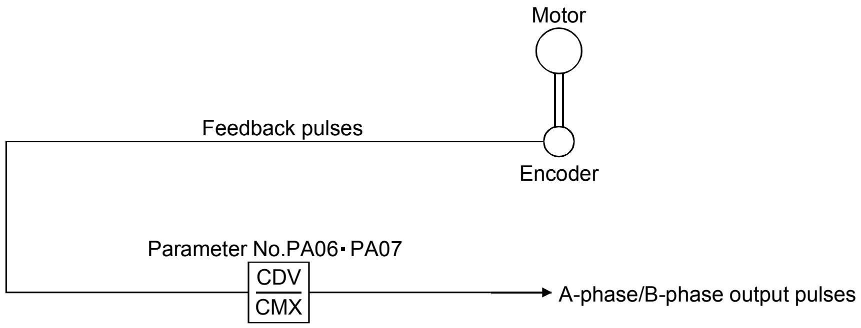

6.2 Gain/filter parameters (No.PB□□)

6.2.1 Parameter list

No.	Symbol	Name	Initial value	Unit
PB01	FILT	Adaptive tuning mode (Adaptive filter Ⅱ)	0000h	
PB02	VRFT	Vibration suppression control tuning mode (Advanced vibration suppression control)	0000h	
PB03		For manufacturer setting	0000h	
PB04	FFC	Feed forward gain	0	%
PB05		For manufacturer setting	500	
PB06	GD2	Ratio of load inertia moment to servo motor inertia moment	7.0	Multiplier (×1)
PB07	PG1	Model loop gain	24	rad/s
PB08	PG2	Position loop gain	37	rad/s
PB09	VG2	Speed loop gain	823	rad/s
PB10	VIC	Speed integral compensation	33.7	ms
PB11	VDC	Speed differential compensation	980	
PB12		For manufacturer setting	0	
PB13	NH1	Machine resonance suppression filter 1	4500	Hz
PB14	NHQ1	Notch shape selection 1	0000h	
PB15	NH2	Machine resonance suppression filter 2	4500	Hz
PB16	NHQ2	Notch shape selection 2	0000h	
PB17		Automatic setting parameter		
PB18	LPF	Low-pass filter	3141	rad/s
PB19	VRF1	Vibration suppression control vibration frequency setting	100.0	Hz
PB20	VRF2	Vibration suppression control resonance frequency setting	100.0	Hz
PB21		For manufacturer setting	0.00	
PB22			0.00	
PB23	VFBF	Low-pass filter selection	0000h	
PB24	*MVS	Slight vibration suppression control selection	0000h	
PB25		For manufacturer setting	0000h	
PB26	*CDP	Gain switching selection	0000h	
PB27	CDL	Gain switching condition	10	kpps pulse r/min
PB28	CDT	Gain switching time constant	1	ms
PB29	GD2B	Gain switching ratio of load inertia moment to servo motor inertia moment	7.0	Multiplier (×1)
PB30	PG2B	Gain switching position loop gain	37	rad/s
PB31	VG2B	Gain switching speed loop gain	823	rad/s
PB32	VICB	Gain switching speed integral compensation	33.7	ms
PB33	VRF1B	Gain switching vibration suppression control vibration frequency setting	100.0	Hz
PB34	VRF2B	Gain switching vibration suppression control resonance frequency setting	100.0	Hz
PB35		For manufacturer setting	0.00	
PB36			0.00	
PB37			100	
PB38			0	
PB39			0	
PB40			0	
PB41			1125	
PB42			1125	
PB43			0004h	
PB44			0000h	
PB45			0000h	

6.2.2 Detail list

<table>
<tr><th>No.</th><th>Symbol</th><th>Name and function</th><th>Initial value</th><th>Unit</th><th>Setting range</th></tr>
<tr><td>PB01</td><td>FILT</td><td>Adaptive tuning mode (Adaptive filter Ⅱ)
Select the setting method for adaptive tuning. Setting this parameter to "□□□ 1" (filter tuning mode) automatically changes the machine resonance suppression filter 1 (parameter No.PB13) and notch shape selection 1 (parameter No.PB14).

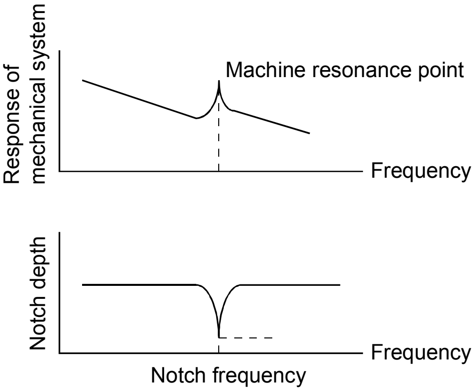

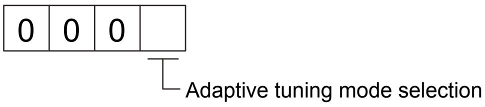

<table>
<tr><th>Setting</th><th>Adaptive tuning mode</th><th>Automatically set parameter</th></tr>
<tr><td>0</td><td>Filter OFF</td><td>(Note)</td></tr>
<tr><td>1</td><td>Filter tuning mode</td><td>Parameter No.PB13
Parameter No.PB14</td></tr>
<tr><td>2</td><td>Manual mode</td><td></td></tr>
</table>

Note. Parameter No.PB13 and PB14 are fixed to the initial values.

When this parameter is set to "□□□ 1", the tuning is completed after the predetermined number of positioning operations is executed for the predetermined period of time, and the setting changes to "□□□ 2". When the adaptive tuning is not necessary, the setting changes to "□□□ 0". When this parameter is set to "□□□ 0", the initial values are set to the machine resonance suppression filter 1 and notch shape selection 1. However, this does not occur when the servo off.</td><td>0000h</td><td></td><td></td></tr>
</table>

<table>
<tr><th>No.</th><th>Symbol</th><th>Name and function</th><th>Initial value</th><th>Unit</th><th>Setting range</th></tr>
<tr><td>PB02</td><td>VRFT</td><td>Vibration suppression control tuning mode (Advanced vibration suppression control)
The vibration suppression is valid when the parameter No.PA08 (auto tuning mode) setting is "□□□2" or "□□□3". When PA08 is "□□□1", vibration suppression is always invalid.
Select the setting method for vibration suppression control tuning. Setting this parameter to "□□□1" (vibration suppression control tuning mode) automatically changes the vibration suppression control - vibration frequency (parameter No.PB19) and vibration suppression control - resonance frequency (parameter No.PB20) after the predetermined number of positioning operations is executed.
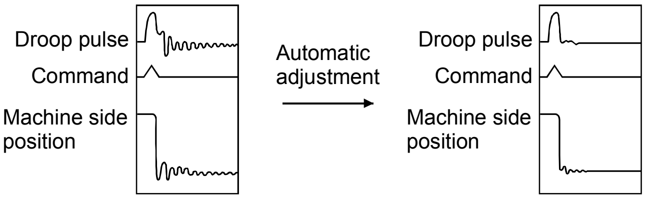
0 0 0 □
Vibration suppression control tuning mode
<table>
<tr><th>Setting</th><th>Vibration suppression control tuning mode</th><th>Automatically set parameter</th></tr>
<tr><td>0</td><td>Vibration suppression control OFF</td><td>(Note)</td></tr>
<tr><td>1</td><td>Vibration suppression control tuning mode (Advanced vibration suppression control)</td><td>Parameter No.PB19
Parameter No.PB20</td></tr>
<tr><td>2</td><td>Manual mode</td><td></td></tr>
</table>
Note. Parameter No.PB19 and PB20 are fixed to the initial values.

When this parameter is set to "□□□1", the tuning is completed after the predetermined number of positioning operations are executed for the predetermined period of time, and the setting changes to "□□□2". When the vibration suppression control tuning is not necessary, the setting changes to "□□□0". When this parameter is set to "□□□0", the initial values are set to the vibration suppression control - vibration frequency and vibration suppression control - resonance frequency. However, this does not occur when the servo off.</td><td>0000h</td><td></td><td></td></tr>
<tr><td>PB03</td><td></td><td>For manufacturer setting
Do not change this value by any means.</td><td>0000h</td><td></td><td></td></tr>
<tr><td>PB04</td><td>FFC</td><td>Feed forward gain
Set the feed forward gain. When the setting is 100%, the droop pulses during operation at constant speed are nearly zero. However, sudden acceleration/deceleration will increase the overshoot. As a guideline, when the feed forward gain setting is 100%, set 1s or more as the acceleration time constant up to the rated speed.</td><td>0</td><td>%</td><td>0
to
100</td></tr>
</table>

No.	Symbol	Name and function	Initial value	Unit	Setting range
PB05		For manufacturer setting Do not change this value by any means.	500		
PB06	GD2	Ratio of load inertia moment to servo motor inertia moment Used to set the ratio of the load inertia moment to the servo motor shaft inertia moment. When auto tuning mode 1 and interpolation mode is selected, the result of auto tuning is automatically used. (Refer to section 9.1.1) In this case, it varies between 0 and 100.0.	7.0	Multiplier (×1)	0 to 300.0
PB07	PG1	Model loop gain Set the response gain up to the target position. Increase the gain to improve track ability in response to the command. When auto turning mode 1, 2 is selected, the result of auto turning is automatically used.	24	rad/s	1 to 2000
PB08	PG2	Position loop gain Used to set the gain of the position loop. Set this parameter to increase the position response to level load disturbance. Higher setting increases the response level but is liable to generate vibration and/or noise. When auto tuning mode 1, 2 and interpolation mode is selected, the result of auto tuning is automatically used.	37	rad/s	1 to 1000
PB09	VG2	Speed loop gain Set a gain of the speed loop. Set this parameter when vibration occurs on machines of low rigidity or large backlash. Higher setting increases the response level but is liable to generate vibration and/or noise. When auto tuning mode 1, 2 manual mode and interpolation mode is selected, the result of auto tuning is automatically used.	823	rad/s	20 to 50000
PB10	VIC	Speed integral compensation Used to set the integral time constant of the speed loop. Lower setting increases the response level but is liable to generate vibration and/or noise. When auto tuning mode 1, 2 and interpolation mode is selected, the result of auto tuning is automatically used.	33.7	ms	0.1 to 1000.0
PB11	VDC	Speed differential compensation Used to set the differential compensation. Made valid when the proportion control (RY(n+2)7) is switched on.	980		0 to 1000
PB12		For manufacturer setting Do not change this value by any means.	0		
PB13	NH1	Machine resonance suppression filter 1 Set the notch frequency of the machine resonance suppression filter 1. Setting parameter No.PB01 (adaptive tuning mode) to "□□□1" automatically changes this parameter. When the parameter No.PB01 setting is "□□□0", the setting of this parameter is ignored.	4500	Hz	100 to 4500

<table>
<tr><th>No.</th><th>Symbol</th><th>Name and function</th><th>Initial value</th><th>Unit</th><th>Setting range</th></tr>
<tr><td>PB14</td><td>NHQ1</td><td>Notch shape selection 1
Used to selection the machine resonance suppression filter 1.
0 □ □ 0
Notch depth selection
<table>
<tr><th>Setting value</th><th>Depth</th><th>Gain</th></tr>
<tr><td>0</td><td>Deep</td><td>-40dB</td></tr>
<tr><td>1</td><td>to</td><td>-14dB</td></tr>
<tr><td>2</td><td></td><td>-8dB</td></tr>
<tr><td>3</td><td>Shallow</td><td>-4dB</td></tr>
</table>
Notch width selection
<table>
<tr><th>Setting value</th><th>Width</th><th>α</th></tr>
<tr><td>0</td><td>Standard</td><td>2</td></tr>
<tr><td>1</td><td>to</td><td>3</td></tr>
<tr><td>2</td><td></td><td>4</td></tr>
<tr><td>3</td><td>Wide</td><td>5</td></tr>
</table>
Setting parameter No.PB01 (adaptive tuning mode) to "□□□1" automatically changes this parameter.
When the parameter No.PB01 setting is "□□□0", the setting of this parameter is ignored.</td><td>0000h</td><td></td><td>Refer to name and function column.</td></tr>
<tr><td>PB15</td><td>NH2</td><td>Machine resonance suppression filter 2
Set the notch frequency of the machine resonance suppression filter 2.
Set parameter No.PB16 (notch shape selection 2) to "□□□1" to make this parameter valid.</td><td>4500</td><td>Hz</td><td>100
to
4500</td></tr>
<tr><td>PB16</td><td>NHQ2</td><td>Notch shape selection 2
Select the shape of the machine resonance suppression filter 2.
0 □ □ □
Machine resonance suppression filter 2 selection
0: Invalid
1: Valid
Notch depth selection
<table>
<tr><th>Setting value</th><th>Depth</th><th>Gain</th></tr>
<tr><td>0</td><td>Deep</td><td>-40dB</td></tr>
<tr><td>1</td><td>to</td><td>-14dB</td></tr>
<tr><td>2</td><td></td><td>-8dB</td></tr>
<tr><td>3</td><td>Shallow</td><td>-4dB</td></tr>
</table>
Notch width selection
<table>
<tr><th>Setting value</th><th>Width</th><th>α</th></tr>
<tr><td>0</td><td>Standard</td><td>2</td></tr>
<tr><td>1</td><td>to</td><td>3</td></tr>
<tr><td>2</td><td></td><td>4</td></tr>
<tr><td>3</td><td>Wide</td><td>5</td></tr>
</table></td><td>0000h</td><td></td><td>Refer to name and function column.</td></tr>
<tr><td>PB17</td><td></td><td>Automatic setting parameter
The value of this parameter is set according to a set value of parameter No.PB06 (Ratio of load inertia moment to servo motor inertia moment).</td><td></td><td></td><td></td></tr>
</table>

No.	Symbol	Name and function	Initial value	Unit	Setting range
PB18	LPF	Low-pass filter Set the low-pass filter. Setting parameter No.PB23 (low-pass filter selection) to "□□0□" automatically changes this parameter. When parameter No.PB23 is set to "□□1□", this parameter can be set manually.	3141	rad/s	100 to 18000
PB19	VRF1	Vibration suppression control vibration frequency setting Set the vibration frequency for vibration suppression control to suppress low-frequency machine vibration, such as enclosure vibration. Setting parameter No.PB02 (vibration suppression control tuning mode) to "□□□1" automatically changes this parameter. When parameter No.PB02 is set to "□□□2", this parameter can be set manually.	100.0	Hz	0.1 to 100.0
PB20	VRF2	Vibration suppression control resonance frequency setting Set the resonance frequency for vibration suppression control to suppress low-frequency machine vibration, such as enclosure vibration. Setting parameter No.PB02 (vibration suppression control tuning mode) to "□□□1" automatically changes this parameter. When parameter No.PB02 is set to "□□□2", this parameter can be set manually.	100.0	Hz	0.1 to 100.0
PB21		For manufacturer setting	0.00		
PB22		Do not change this value by any means.	0.00		
PB23	VFBF	Low-pass filter selection Select the low-pass filter. (Refer to section 10.5.) 0 0 □ 0 Low-pass filter selection 0: Automatic setting 1: Manual setting (parameter No.PB18 setting)	0000h		Refer to name and function column.
PB24	*MVS	Slight vibration suppression control selection Select the slight vibration suppression control. When parameter No.PA08 (auto tuning mode) is set to "□□□3", slight vibration suppression control is made valid. 0 0 0 □ Slight vibration suppression control selection 0: Invalid 1: Valid	0000h		Refer to name and function column.

No.	Symbol	Name and function	Initial value	Unit	Setting range
PB25		For manufacturer setting Do not change this value by any means.	0000h		
PB26	*CDP	Gain switching selection Select the gain switching condition. (Refer to section 10.6.) 0 0 □ □ Gain switching selection The gain is changed depending on the setting value of parameter No.PB29 to PB34 with the following conditions. 0: Invalid 1: Gain switching (RY(n+2)8) 2: Command frequency (Parameter No.PB27 setting) 3: Droop pulse value (Parameter No.PB27 setting) 4: Servo motor speed (Parameter No.PB27 setting) Gain switching condition 0: Valid at more than condition (Valid when gain changing (RY(n+2)8) is ON) 1: Valid at less than condition (Valid when gain changing (RY(n+2)8) is OFF)	0000h		Refer to name and function column.
PB27	CDL	Gain switching condition Used to set the value of gain switching condition (command frequency, droop pulses, servo motor speed) selected in parameter No.PB26. The set value unit changes with the switching condition item. (Refer to section 10.6.)	10	kpps pulse r/min	0 to 9999
PB28	CDT	Gain switching time constant Used to set the time constant at which the gains will switch in response to the conditions set in parameters No.PB26 and PB27. (Refer to section 10.6.)	1	ms	0 to 100
PB29	GD2B	Gain switching ratio of load inertia moment to servo motor inertia moment Used to set the ratio of load inertia moment to servo motor inertia moment when gain switching is valid. This parameter is made valid when the auto tuning is invalid (parameter No. PA08: □□□3).	7.0	Multiplier (×1)	0 to 300.0
PB30	PG2B	Gain switching position loop gain Set the position loop gain when the gain switching is valid. This parameter is made valid when the auto tuning is invalid (parameter No. PA08: □□□3).	37	rad/s	1 to 2000
PB31	VG2B	Gain switching speed loop gain Set the speed loop gain when the gain switching is valid. This parameter is made valid when the auto tuning is invalid (parameter No. PA08: □□□3).	823	rad/s	20 to 50000
PB32	VICB	Gain switching speed integral compensation Set the speed integral compensation when the gain switching is valid. This parameter is made valid when the auto tuning is invalid (parameter No. PA08: □□□3).	33.7	ms	0.1 to 5000.0

No.	Symbol	Name and function	Initial value	Unit	Setting range
PB33	VRF1B	Gain switching vibration suppression control vibration frequency setting Set the vibration frequency for vibration suppression control when the gain switching is valid. This parameter is made valid when the parameter No.PB02 setting is "□□□2" and the parameter No.PB26 setting is "□□□1". When using the vibration suppression control gain switching, always execute the changing after the servo motor has stopped.	100.0	Hz	0.1 to 100.0
PB34	VRF2B	Gain switching vibration suppression control resonance frequency setting Set the resonance frequency for vibration suppression control when the gain switching is valid. This parameter is made valid when the parameter No.PB02 setting is "□□□2" and the parameter No.PB26 setting is "□□□1". When using the vibration suppression control gain switching, always execute the switching after the servo motor has stopped.	100.0	Hz	0.1 to 100.0
PB35		For manufacturer setting Do not change this value by any means.	0.00		
PB36			0.00		
PB37			100		
PB38			0		
PB39			0		
PB40			0		
PB41			1125		
PB42			1125		
PB43			0004h		
PB44			0000h		
PB45			0000h		

6.3 Extension setting parameters (No.PC□□)

6.3.1 Parameter list

No.	Symbol	Name and function	Initial value	Unit
PC01		For manufacturer setting	0000h	
PC02	*ZTY	Home position return type	0000h	
PC03	*ZDIR	Home position return direction	0001h	
PC04	ZRF	Home position return speed	500	r/min
PC05	CRF	Creep speed	10	r/min
PC06	ZST	Home position shift distance	0	μm
PC07	*ZPS	Home position return position data	0	$\times 10^{STM}$μm
PC08	DCT	Moving distance after proximity dog	1000	$\times 10^{STM}$μm
PC09	ZTM	Stopper type home position return stopper time	100	ms
PC10	ZTT	Stopper type home position return torque limit value	15.0	%
PC11	CRP	Rough match output range	0	$\times 10^{STM}$μm
PC12	JOG	Jog speed	100	r/min
PC13	*STC	S-pattern acceleration/deceleration time constant	0	ms
PC14	*BKC	Backlash compensation	0	pulse
PC15		For manufacturer setting	0000h	
PC16	MBR	Electromagnetic brake sequence output	100	ms
PC17	ZSP	Zero speed	50	r/min
PC18	*BPS	Alarm history clear	0000h	
PC19	*ENRS	Encoder output pulse selection	0000h	
PC20	*SNO	Station number setting	0	station
PC21	*SOP	RS-422 communication function selection	0000h	
PC22	*COP1	Function selection C-1	0000h	
PC23		For manufacturer setting	0000h	
PC24	*COP3	Function selection C-3	0000h	

No.	Symbol	Name and function	Initial value	Unit
PC25		For manufacturer setting	0000h	
PC26	*COP5	Function selection C-5	0000h	
PC27		For manufacturer setting	0000h	
PC28	*COP7	Function selection C-7	0000h	
PC29		For manufacturer setting	0000h	
PC30	*DSS	Remote register-based position/speed specifying system selection	0000h	
PC31	LMPL	Software limit ＋	0	$\times 10^{STM}$μm
PC32	LMPH			
PC33	LMNL	Software limit －	0	$\times 10^{STM}$μm
PC34	LMNH			
PC35	TL2	Internal torque limit 2	100.0	%
PC36		For manufacturer setting	0000h	
PC37	*LPPL	Position range output address ＋	0	$\times 10^{STM}$μm
PC38	*LPPH			
PC39	*LNPL	Position range output address －	0	$\times 10^{STM}$μm
PC40	*LNPH			
PC41		For manufacturer setting	0000h	
PC42			0000h	
PC43			0000h	
PC44			0000h	
PC45			0000h	
PC46			0000h	
PC47			0000h	
PC48			0000h	
PC49		For manufacturer setting	0000h	
PC50	*COPA	Function selection C-A	0000h	

6.3.2 Detail list

No.	Symbol	Name and function	Initial value	Unit	Setting range
PC01		For manufacturer setting Do not change this value by any means.	0000h		
PC02	*ZTY	Home position return type Used to set the home position return system. (Refer to section 5.6.) 0 0 0 ☐ Home position return system 0: Dog type 1: Count type 2: Data setting type 3: Stopper type 4: Home position ignorance (Servo-on position as home position) 5: Dog type rear end reference 6: Count type front end reference 7: Dog cradle type 8: Dog type right-before Z-phase reference 9: Dog type front end reference A: Dogless Z-phase reference	0000h		Refer to name and function column.
PC03	*ZDIR	Home position return direction Used to set the home position return direction. 0 0 0 ☐ Home position return direction 0: Address increment direction 1: Address decrement direction	0001h		Refer to name and function column.
PC04	ZRF	Home position return speed Used to set the servo motor speed for home position return. (Refer to section 5.6.)	500	r/min	0 to permissible speed
PC05	CRF	Creep speed Used to set the creep speed after proximity dog detection. (Refer to section 5.6.)	10	r/min	0 to permissible speed
PC06	ZST	Home position shift distance Used to set the travel distance from the home position. (Refer to section 5.6.)	0	μm	0 to 65535
PC07	*ZPS	Home position return position data Used to set the current position on completion of home position return. (Refer to section 5.6.)	0	$\times 10^{STM}$ μm	−32768 to 32767
PC08	DCT	Travel distance after proximity dog Used to set the travel distance after the proximity dog is detected. (Refer to section 5.6.)	1000	$\times 10^{STM}$ μm	0 to 65535
PC09	ZTM	Stopper type home position return stopper time In stopper type home position return, used to set the time from when the machine part is pressed against the stopper and the torque limit set in parameter No.PC10 is reached to when the home position is set. (Refer to section 5.6.5.)	100	ms	5 to 1000

No.	Symbol	Name and function	Initial value	Unit	Setting range
PC10	ZTT	Stopper type home position return torque limit value Used to set the torque limit value relative to the max. torque in [%] in stopper type home position return. (Refer to section 5.6.5.)	15.0	%	1 to 100.0
PC11	CRP	Rough match output range Used to set the command remaining distance range where the rough match (RXn2) is output.	0	$\times 10^{STM}$μm	0 to 65535
PC12	JOG	JOG speed Used to set the jog speed command.	100	r/min	0 to permissible speed
PC13	*STC	S-pattern acceleration/deceleration time constant Set when inserting S-pattern time constant into the acceleration/deceleration time constant of the point table. (Refer to section 6.3.3.) This time constant is invalid for home position return.	0	ms	0 to 1000
PC14	*BKC	Backlash compensation Used to set the backlash compensation made when the command direction is reversed. This function compensates for the number of backlash pulses in the opposite direction to the home position return direction. For the home position ignorance (servo-on position as home position), this function compensates for the number of backlash pulses in the opposite direction to the first rotating direction after establishing the home position by switching ON the servo-on (RYn0). In the absolute position detection system, this function compensates for the backlash pulse count in the direction opposite to the operating direction at power-on.	0	pulse	0 to 32000
PC15		For manufacturer setting Do not change this value by any means.	0000h		
PC16	MBR	Electromagnetic brake sequence output Used to set the delay time (Tb) between when the electromagnetic brake interlock (MBR) switches off and when the base circuit is shut off.	100	ms	0 to 1000
PC17	ZSP	Zero speed Used to set the output range of the zero speed detection (ZSP). Zero speed detection (ZSP) has hysteresis width of 20r/min. (Refer to 4.5.1 (2).)	50	r/min	0 to 10000
PC18	*BPS	Alarm history clear Used to clear the alarm history. 0 0 0 □ Alarm history clear 0: Invalid 1: Valid When alarm history clear is made valid, the alarm history is cleared at next power-on. After the alarm history is cleared, the setting is automatically made invalid (reset to 0).	0000h		Refer to name and function column.

No.	Symbol	Name and function	Initial value	Unit	Setting range
PC19	*ENRS	Encoder output pulse selection Use to select the encoder output pulse direction and encoder output pulse setting. 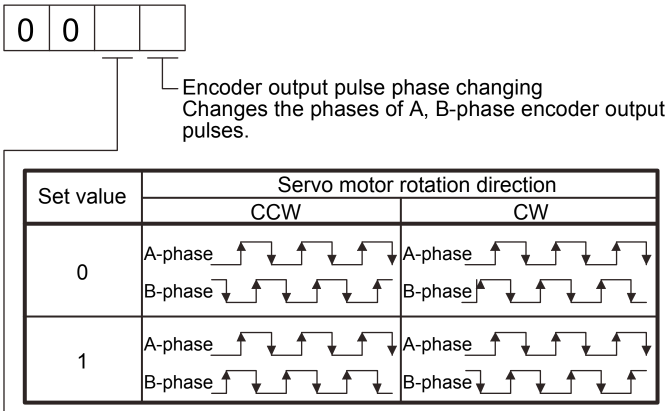 Encoder output pulse phase changing Changes the phases of A, B-phase encoder output pulses. Encoder output pulse setting selection (refer to parameter No.PA15). 0: Output pulse designation 1: Division ratio setting 2: Ratio is automatically set to command pulse unit Setting "2" makes the parameter No.PA15 (encoder output pulse) setting invalid.	0000h		Refer to name and function column.
PC20	*SNO	Station number setting Used to specify the station number of the servo amplifier for RS-422 communication. Always set one station to one axis of servo amplifier. If one station number is set to two or more stations, normal communication cannot be made.	0	station	0 to 31
PC21	*SOP	RS-422 communication function selection Select the communication I/F and select the RS-422 communication conditions. 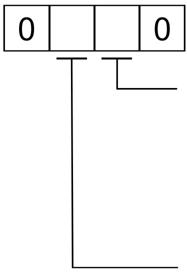 RS-422 communication baud rate selection 0: 9600 [bps] 1: 19200 [bps] 2: 38400 [bps] 3: 57600 [bps] 4: 115200[bps] RS-422 communication response delay time 0: Invalid 1: Valid, reply sent after delay time of 800 μs or more	0000h		Refer to name and function column.
PC22	*COP1	Function selection C-1 Select the encoder cable communication system selection. 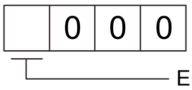 Encoder cable communication system selection 0: Two-wire type 1: Four-wire type Incorrect setting will result in an encoder alarm 1 (A16) or encoder alarm 2 (A20).	0000h		Refer to the name and function field.

<table>
<tr><th>No.</th><th>Symbol</th><th>Name and function</th><th>Initial value</th><th>Unit</th><th>Setting range</th></tr>
<tr><td>PC23</td><td></td><td>For manufacturer setting
Do not change this value by any means.</td><td>0000h</td><td></td><td></td></tr>
<tr><td>PC24</td><td>*COP3</td><td>Function selection C-3
Select the unit of the in-position range.
0 0 0 ☐
In-position range unit selection
0: Command input unit
1: Servo motor encoder unit</td><td>0000h</td><td></td><td>Refer to name and function column.</td></tr>
<tr><td>PC25</td><td></td><td>For manufacturer setting
Do not change this value by any means.</td><td>0000h</td><td></td><td></td></tr>
<tr><td>PC26</td><td>*COP5</td><td>Function selection C-5
Select the stroke limit warning (A99).
0 0 0 ☐
Stroke limit warning (A99) selection
0: Valid
1: Invalid
When this parameter is set to "1", A99 will not occur if the forward rotation stroke end (LSP) or reverse rotation stroke end (LSN) turns OFF.</td><td>0000h</td><td></td><td>Refer to name and function column.</td></tr>
<tr><td>PC27</td><td></td><td>For manufacturer setting
Do not change this value by any means.</td><td>0000h</td><td></td><td></td></tr>
<tr><td>PC28</td><td>*COP7</td><td>Function selection C-7
Select the display method of the current position and command position.
0 0 ☐ ☐
Electronic gear fraction clear selection
0: Invalid
1: Valid
By setting it to "1", the fraction of the last command by the electronic gear is cleared when starting automatic operation.
Current position and command position display selection
<table>
<tr><th rowspan="2">Setting value</th><th rowspan="2">Display method</th><th rowspan="2">Operation mode</th><th colspan="2">Status display</th></tr>
<tr><th>Current position</th><th>Command position</th></tr>
<tr><td rowspan="2">0</td><td rowspan="2">Positioning display</td><td>Automatic</td><td rowspan="2">The actual current position where the machine home position is assumed as 0 is displayed.</td><td rowspan="2">The command current position where the machine home position is assumed as 0 is displayed.</td></tr>
<tr><td>Manual</td></tr>
<tr><td rowspan="2">1</td><td rowspan="2">Roll feed display</td><td>Automatic</td><td rowspan="2">The actual current position where the automatic operation start position is assumed as 0 is displayed.</td><td>The count starts from 0 when the start signal is turned on, and the command current position to the target position is displayed. During a stop, the command position of the selected point table is displayed.</td></tr>
<tr><td>Manual</td><td>The command position of the selected point table is displayed.</td></tr>
</table>
</td><td>0000h</td><td></td><td>Refer to name and function column.</td></tr>
</table>

<table>
<tr><th>No.</th><th>Symbol</th><th>Name and function</th><th>Initial value</th><th>Unit</th><th>Setting range</th></tr>
<tr><td>PC29</td><td></td><td>For manufacturer setting
Do not change this value by any means</td><td>0000h</td><td></td><td></td></tr>
<tr><td>PC30</td><td>*DSS</td><td>Remote register-based position/speed specifying method selection
This parameter is made valid when position/speed specification method selection (RY(n+2)A) is turned ON with 2 stations occupied. Select how to receive the position command and speed command.
When 1 station is occupied, selection of "0001" or "0002" will result in a parameter error.
0 0 0 □
<table>
<tr><th>Set value</th><th>Position command</th><th>Speed command</th></tr>
<tr><td>0</td><td colspan="2">Specify the point table No.</td></tr>
<tr><td>1</td><td rowspan="2">Set the position data.</td><td>Specify the point table No.</td></tr>
<tr><td>2</td><td>Settheservomotorspeed.(Note)</td></tr>
</table>
Note. In the case, always set an acceleration/deceleration time constant in the point table No.1.</td><td>0000h</td><td></td><td>Refer to name and function column.</td></tr>
<tr><td>PC31</td><td>LMPL</td><td rowspan="2">Software limit +
Used to set the address increment side software stroke limit. The software limit is made invalid if this value is the same as in "software limit −".
(Refer to section 6.3.6.)
Set the same sign to parameters No.PC31 and No.PC32. Setting of different signs will result in a parameter error.
Set address:□□□□□□
Upper 3 digits Lower 3 digits
Parameter No.PC31
Parameter No.PC32
The software limit+ is a set of upper digits and lower digits. To change the value, set in the order of lower digits to upper digits.</td><td rowspan="2">0</td><td rowspan="2">$\times 10^{STM}$μm</td><td rowspan="2">−999999
to
999999</td></tr>
<tr><td>PC32</td><td>LMPH</td></tr>
<tr><td>PC33</td><td>LMNL</td><td rowspan="2">Software limit −
Used to set the address decrement side software stroke limit. The software limit is made invalid if this value is the same as in "software limit +".
(Refer to section 6.3.6.)
Set the same sign to parameters No.PC33 and PC34. Setting of different signs will result in a parameter error.
Set address: □□□□□□
Upper 3 digits Lower 3 digits
Parameter No.PC33
Parameter No.PC34
The software limit− is a set of upper digits and lower digits. To change the value, set in the order of lower digits to upper digits.</td><td rowspan="2">0</td><td rowspan="2">$\times 10^{STM}$μm</td><td rowspan="2">−999999
to
999999</td></tr>
<tr><td>PC34</td><td>LMNH</td></tr>
<tr><td>PC35</td><td>TL2</td><td>Internal torque limit 2
Set this parameter to limit servo motor torque on the assumption that the maximum torque is 100[%].
When 0 is set, torque is not produced.</td><td>100.0</td><td>%</td><td>0
to
100.0</td></tr>
<tr><td>PC36</td><td></td><td>For manufacturer setting
Do not change this value by any means.</td><td>0000h</td><td></td><td></td></tr>
</table>

No.	Symbol	Name and function	Initial value	Unit	Setting range
PC37	*LPPL	Position range output address + Used to set the address increment side position range output address. Set the same sign to parameters No.PC37 and PC38. Setting of different signs will result in a parameter error. In parameters No.PC37 to PC40, set the range where position range (RXnE) turns on. Set address:□□□□□□ Upper 3 digits　Lower 3 digits Parameter No.PC37 (lower 3 digits) Parameter No.PC38 (upper 3 digits) Position range output address + is a set of upper digits and lower digits. To change the value, set in the order of lower digits to upper digits.	0	$\times 10^{STM}$μm	−999999 to 999999
PC38	*LPPH				
PC39	*LNPL	Position range output address − Used to set the address decrement side position range output address. Set the same sign to parameters No.PC39 and PC40. Setting of different signs will result in a parameter error. Set address:□□□□□□ Upper 3 digits　Lower 3 digits Parameter No.PC39 (lower 3 digits) Parameter No.PC40 (upper 3 digits) Position range output address − is a set of upper digits and lower digits. To change the value, set in the order of lower digits to upper digits.	0	$\times 10^{STM}$μm	−999999 to 999999
PC40	*LNPH				
PC41		For manufacturer setting Do not change this value by any means.	0000h		
PC42			0000h		
PC43			0000h		
PC44			0000h		
PC45			0000h		
PC46			0000h		
PC47			0000h		
PC48			0000h		
PC49			0000h		
PC50	*COPA	Function selection C-A □ 0 0 0 CC-Link communication error (A8D) extended function selection 0: No extended function 1: CC-Link communication error (A8D) detection delay Use parameter No.PD25 to set how long to delay the occurrence timing of CC-Link communication error (A8D). This parameter is available with servo amplifiers with software version A8 or later. When this parameter is set using MR Configurator with software version C5 or earlier, the parameter name is not displayed. However, the setting value is changeable. Follow the instructions in this Instruction Manual to set the value.	0000h		Refer to name and function column.

6.3.3 S-pattern acceleration/deceleration

In servo operation, linear acceleration/deceleration is usually made. By setting the S-pattern acceleration/deceleration time constant (parameter No.PC13), a smooth start/stop can be made. When the S-pattern time constant is set, smooth positioning is executed as shown below. Note that the time equivalent to the S-pattern time constant setting increases until positioning (RXnC) is complete.

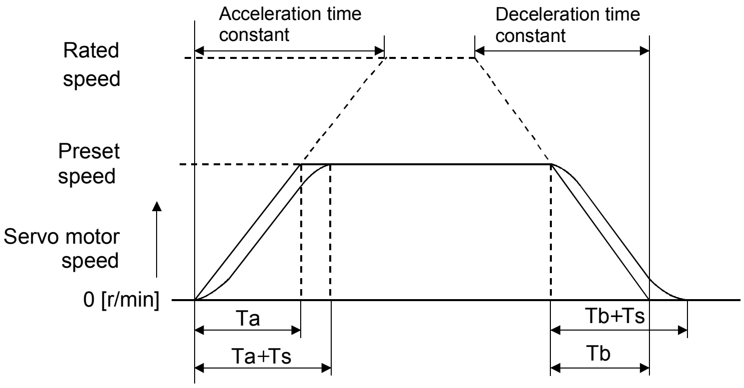

Ta: Time until preset speed is reached
Tb: Time until stop
Ts: S-pattern acceleration/deceleration time constant
(parameter No.PC13)
Setting range 0 to 1000ms

6.3.4 Alarm history clear

The alarm history can be confirmed by using the MR Configurator. The servo amplifier stores last six alarms from when its power is switched on first. To control alarms which will occur during operation, clear the alarm history using parameter No.PC18 (alarm history clear) before starting operation. Clearing the alarm history automatically returns to "□□□0".
This parameter is made valid by switching power off, then on after setting.

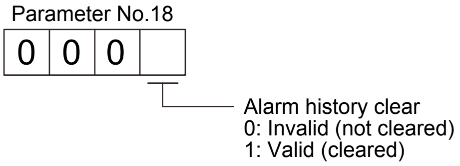

6.3.5 Rough match output

Rough match (RXn2) is output when the command remaining distance reaches the value set in parameter No.PC11 (rough match output range). The setting range is 0 to 65535 [$\times 10^{STM}$μm].

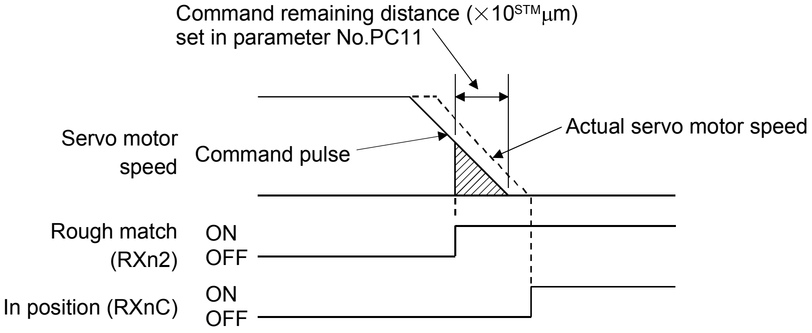

6.3.6 Software limit

A limit stop using a software limit (parameter No.PC31 to PC34) is made as in stroke end operation. When a motion goes beyond the setting range, the motor is stopped and servo-locked. This function is made valid at power-on but made invalid during home position return. This function is made invalid when the software limit + setting is the same as the software limit － setting. A parameter error (A37) will occur if the software limit + setting is less than the software limit － setting.

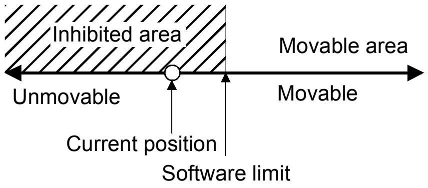

6.4 I/O setting parameters (No.PD□ □)

6.4.1 Parameter list

No.	Symbol	Name	Initial value	Unit
PD01	*DIA1	Input signal automatic ON selection 1	0000h	
PD02		For manufacturer setting	0000h	
PD03	*DIA3	Input signal automatic ON selection 3	0000h	
PD04	*DIA4	Input signal automatic ON selection 4	0000h	
PD05		For manufacturer setting	0000h	
PD06	*DI2	Input signal device selection 2 (CN6-2)	002Bh	
PD07	*DI3	Input signal device selection 3 (CN6-3)	000Ah	
PD08	*DI4	Input signal device selection 4 (CN6-4)	000Bh	
PD09	*DO1	Output signal device selection 1 (CN6-14)	0002h	
PD10	*DO2	Output signal device selection 2 (CN6-15)	0003h	
PD11	*DO3	Output signal device selection 3 (CN6-16)	0024h	
PD12	*DIN1	External DI function selection 1	0C00h	
PD13		For manufacturer setting	0000h	
PD14	*DIN3	External DI function selection 3	0800h	
PD15		For manufacturer setting	0000h	
PD16	*DIAB	Input polarity selection	0000h	
PD17		For manufacturer setting	0000h	
PD18			0000h	
PD19	*DIF	Response level setting	0002h	
PD20	*DOP1	Function selection D-1	0010h	
PD21		For manufacturer setting	0000h	
PD22	*DOP3	Function selection D-3	0000h	
PD23		For manufacturer setting	0000h	
PD24	*DOP5	Function selection D-5	0000h	
PD25	A8DT	CC-Link communication error (A8D) detection time	0000h	ms
PD26		For manufacturer setting	0064h	
PD27			0000h	
PD28			0000h	
PD29			0000h	
PD30			0000h	

6.4.2 Detail list

No.	Symbol	Name and function	Initial value	Unit	Setting range
PD01	*DIA1	Input signal automatic ON selection 1 Select the input devices to be automatically turned ON. ▧ part is for manufacturer setting. Do not set the value by any means. 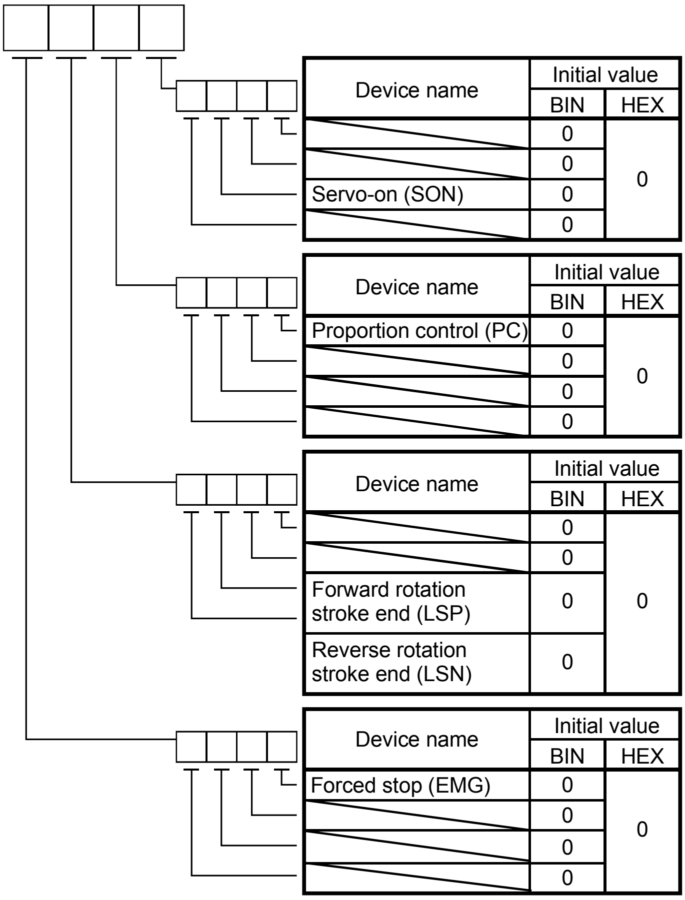 BIN 0: Used in CC-Link or as external input signal. BIN 1: Automatic ON For example, to turn ON SON, the setting is "□□□4".	0000h		Refer to name and function column.
PD02		For manufacturer setting Do not change this value by any means.	0000h		

<table>
<tr><th>No.</th><th>Symbol</th><th>Name and function</th><th>Initial value</th><th>Unit</th><th>Setting range</th></tr>
<tr><td>PD03</td><td>*DIA3</td><td>Input signal automatic ON selection 3
Select the input devices to be automatically turned ON.
▧ part is for manufacturer setting. Do not set the value by any means.
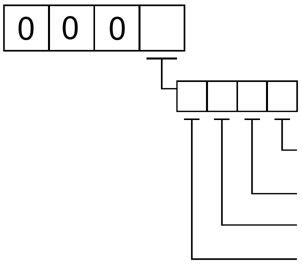
<table>
<tr><th rowspan="2">Device name</th><th colspan="2">Initial value</th></tr>
<tr><th>BIN</th><th>HEX</th></tr>
<tr><td>Automatic/manual selection (MD0)</td><td>0</td><td rowspan="4">0</td></tr>
<tr><td></td><td>0</td></tr>
<tr><td></td><td>0</td></tr>
<tr><td></td><td>0</td></tr>
</table>
BIN 0: Used in CC-Link or as external input signal.
BIN 1: Automatic ON</td><td>0000h</td><td></td><td>Refer to name and function column.</td></tr>
<tr><td>PD04</td><td>*DIA4</td><td>Input signal automatic ON selection 4
Select the input devices to be automatically turned ON.
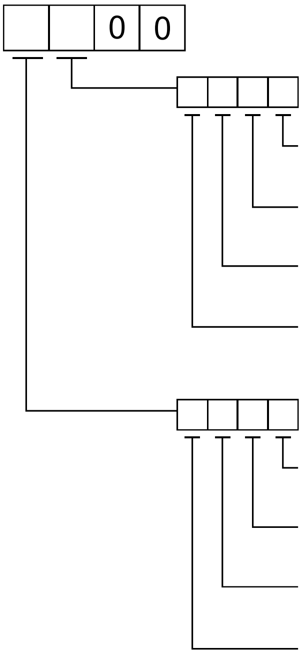
<table>
<tr><th rowspan="2">Device name</th><th colspan="2">Initial value</th></tr>
<tr><th>BIN</th><th>HEX</th></tr>
<tr><td>Point table No. selection 1 (DI0)</td><td>0</td><td rowspan="4">0</td></tr>
<tr><td>Point table No. selection 2 (DI1)</td><td>0</td></tr>
<tr><td>Point table No. selection 3 (DI2)</td><td>0</td></tr>
<tr><td>Point table No. selection 4 (DI3)</td><td>0</td></tr>
</table>
<table>
<tr><th rowspan="2">Device name</th><th colspan="2">Initial value</th></tr>
<tr><th>BIN</th><th>HEX</th></tr>
<tr><td>Point table No. selection 5 (DI4)</td><td>0</td><td rowspan="4">0</td></tr>
<tr><td>Point table No. selection 6 (DI5)</td><td>0</td></tr>
<tr><td>Point table No. selection 7 (DI6)</td><td>0</td></tr>
<tr><td>Point table No. selection 8 (DI7)</td><td>0</td></tr>
</table>
BIN 0: Used in CC-Link or as external input signal.
BIN 1: Automatic ON</td><td>0000h</td><td></td><td>Refer to name and function column.</td></tr>
<tr><td>PD05</td><td></td><td>For manufacturer setting
Do not change this value by any means.</td><td>0000h</td><td></td><td></td></tr>
</table>

<table>
<tr><th>No.</th><th>Symbol</th><th>Name and function</th><th>Initial value</th><th>Unit</th><th>Setting range</th></tr>
<tr><td>PD06</td><td>*DI2</td><td>Output signal device selection 2 (CN6-2)
Any input device can be assigned to the CN6-2 pin.
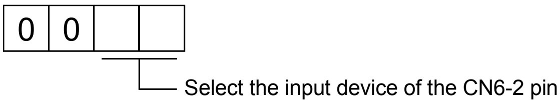
The devices that can be assigned are indicated in the following table.
<table>
<tr><th rowspan="2">Setting (Note)</th><th colspan="2">Input device</th></tr>
<tr><th>Name</th><th>Abbreviation</th></tr>
<tr><td>00</td><td>No assignment function</td><td></td></tr>
<tr><td>02</td><td>Servo-on</td><td>SON</td></tr>
<tr><td>03</td><td>Reset</td><td>RES</td></tr>
<tr><td>04</td><td>Proportion control</td><td>PC</td></tr>
<tr><td>06</td><td>Clear</td><td>CR</td></tr>
<tr><td>07</td><td>Forward rotation start</td><td>ST1</td></tr>
<tr><td>08</td><td>Reverse rotation start</td><td>ST2</td></tr>
<tr><td>09</td><td>Internal torque limit selection</td><td>TL1</td></tr>
<tr><td>0A</td><td>Forward rotation stroke end</td><td>LSP</td></tr>
<tr><td>0B</td><td>Reverse rotation stroke end</td><td>LSN</td></tr>
<tr><td>0D</td><td>Gain switching</td><td>CDP</td></tr>
<tr><td>20</td><td>Automatic/manual selection</td><td>MD0</td></tr>
<tr><td>24</td><td>Manual pulse generator multiplication 1</td><td>TP0</td></tr>
<tr><td>25</td><td>Manual pulse generator multiplication 2</td><td>TP1</td></tr>
<tr><td>27</td><td>Temporary stop/restart</td><td>TSTP</td></tr>
<tr><td>2B</td><td>Proximity dog</td><td>DOG</td></tr>
</table>
Note. The other setting values than shown in this table are for manufacturer setting.</td><td>002Bh</td><td></td><td>Refer to name and function column.</td></tr>
<tr><td>PD07</td><td>*DI3</td><td>Output signal device selection 3 (CN6-3)
Any input device can be assigned to the CN6-3 pin.
The devices that can be assigned and the setting method are the same as in parameter No.PD06.
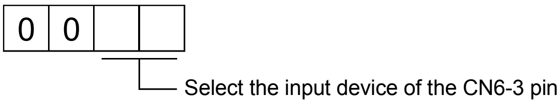 </td><td>000Ah</td><td></td><td>Refer to name and function column.</td></tr>
<tr><td>PD08</td><td>*DI4</td><td>Output signal device selection 4 (CN6-4)
Any input device can be assigned to the CN6-4 pin.
The devices that can be assigned and the setting method are the same as in parameter No.PD06.
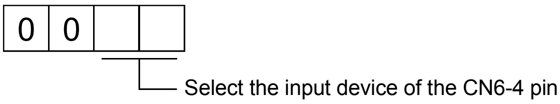 </td><td>000Bh</td><td></td><td>Refer to name and function column.</td></tr>
</table>

<table>
<tr><th>No.</th><th>Symbol</th><th>Name and function</th><th>Initial value</th><th>Unit</th><th>Setting range</th></tr>
<tr><td>PD09</td><td>*DO1</td><td>Output signal device selection 1 (CN6-14)
Any output signal can be assigned to the CN6-14 pin.
0 0
Select the output device of the CN6-14 pin

The devices that can be assigned are indicated in the following table.
<table>
<tr><th rowspan="2">Setting (Note)</th><th colspan="2">Output device</th></tr>
<tr><th>Name</th><th>Symbol</th></tr>
<tr><td>00</td><td>Always OFF</td><td></td></tr>
<tr><td>02</td><td>Ready</td><td>RD</td></tr>
<tr><td>03</td><td>Trouble</td><td>ALM</td></tr>
<tr><td>04</td><td>In position</td><td>INP</td></tr>
<tr><td>05</td><td>Electromagnetic brake interlock</td><td>MBR</td></tr>
<tr><td>06</td><td>Dynamic brake interlock</td><td>DB</td></tr>
<tr><td>07</td><td>Limiting torque</td><td>TLC</td></tr>
<tr><td>08</td><td>Warning</td><td>WNG</td></tr>
<tr><td>09</td><td>Battery warning</td><td>BWNG</td></tr>
<tr><td>0A</td><td>Speed command reached</td><td>SA</td></tr>
<tr><td>0C</td><td>Zero speed</td><td>ZSP</td></tr>
<tr><td>0F</td><td>Variable gain selection</td><td>CDPS</td></tr>
<tr><td>23</td><td>Rough match</td><td>CPO</td></tr>
<tr><td>24</td><td>Home position return completion</td><td>ZP</td></tr>
<tr><td>25</td><td>Position range</td><td>POT</td></tr>
<tr><td>26</td><td>Temporary stop</td><td>PUS</td></tr>
<tr><td>27</td><td>Movement completion</td><td>MEND</td></tr>
<tr><td>38</td><td>Point table No. output 1</td><td>PT0</td></tr>
<tr><td>39</td><td>Point table No. output 2</td><td>PT1</td></tr>
<tr><td>3A</td><td>Point table No. output 3</td><td>PT2</td></tr>
<tr><td>3B</td><td>Point table No. output 4</td><td>PT3</td></tr>
<tr><td>3C</td><td>Point table No. output 5</td><td>PT4</td></tr>
<tr><td>3D</td><td>Point table No. output 6</td><td>PT5</td></tr>
<tr><td>3E</td><td>Point table No. output 7</td><td>PT6</td></tr>
<tr><td>3F</td><td>Point table No. output 8</td><td>PT7</td></tr>
</table>
Note. The other setting values than shown in this table are for manufacturer setting.</td><td>0002h</td><td></td><td>Refer to name and function column.</td></tr>
<tr><td>PD10</td><td>*DO2</td><td>Output signal device selection 2 (CN6-15)
Any output signal can be assigned to the CN6-15 pin.
The devices that can be assigned and the setting method are the same as in parameter No.PD09.
0 0
Select the output device of the CN6-15 pin</td><td>0003h</td><td></td><td>Refer to name and function column.</td></tr>
</table>

<table>
<tr><th>No.</th><th>Symbol</th><th>Name and function</th><th>Initial value</th><th>Unit</th><th>Setting range</th></tr>
<tr><td>PD11</td><td>*DO3</td><td>Output signal device selection 3 (CN6-16)
Any output signal can be assigned to the CN6-16 pin.
The devices that can be assigned and the setting method are the same as in parameter No.PD09.
0 0 □ □
Select the output device of the CN6-16 pin</td><td>0024h</td><td></td><td>Refer to name and function column.</td></tr>
<tr><td>PD12</td><td>*DIN1</td><td>External DI function selection 1
This function sets any signal imported from the CN6 connector.
⧅ part is for manufacturer setting. Do not set the value by any means.
□ □ □ □
<table>
<tr><th rowspan="2">Device name</th><th colspan="2">Initial value</th></tr>
<tr><th>BIN</th><th>HEX</th></tr>
<tr><td>⧅</td><td>0</td><td rowspan="4">0</td></tr>
<tr><td>⧅</td><td>0</td></tr>
<tr><td>Servo-on (SON)</td><td>0</td></tr>
<tr><td>Reset (RES)</td><td>0</td></tr>
</table>
<table>
<tr><th rowspan="2">Device name</th><th colspan="2">Initial value</th></tr>
<tr><th>BIN</th><th>HEX</th></tr>
<tr><td>Proportion control (PC)</td><td>0</td><td rowspan="4">0</td></tr>
<tr><td>⧅</td><td>0</td></tr>
<tr><td>Clear (CR)</td><td>0</td></tr>
<tr><td>Forward rotation start (ST1)</td><td>0</td></tr>
</table>
<table>
<tr><th rowspan="2">Device name</th><th colspan="2">Initial value</th></tr>
<tr><th>BIN</th><th>HEX</th></tr>
<tr><td>Reverse rotation start (ST2)</td><td>0</td><td rowspan="4">C</td></tr>
<tr><td>Internal torque limit (TL1)</td><td>0</td></tr>
<tr><td>Forward rotation stroke end (LSP)</td><td>1</td></tr>
<tr><td>Reverse rotation stroke end (LSN)</td><td>1</td></tr>
</table>
<table>
<tr><th rowspan="2">Device name</th><th colspan="2">Initial value</th></tr>
<tr><th>BIN</th><th>HEX</th></tr>
<tr><td>⧅</td><td>0</td><td rowspan="4">0</td></tr>
<tr><td>Gain changing (CDP)</td><td>0</td></tr>
<tr><td>⧅</td><td>0</td></tr>
<tr><td>⧅</td><td>0</td></tr>
</table>
BIN 0: Used in CC-Link
BIN 1: Used in CN6 external input signal</td><td>0C00h</td><td></td><td>Refer to name and function column.</td></tr>
<tr><td>PD13</td><td></td><td>For manufacturer setting
Do not change this value by any means.</td><td>0000h</td><td></td><td></td></tr>
</table>

No.	Symbol	Name and function	Initial value	Unit	Setting range
PD14	*DIN3	External DI function selection 3 This function sets any signal imported from the CN6 connector. ▧ part is for manufacturer setting. Do not set the value by any means.	0800h		Refer to name and function column.

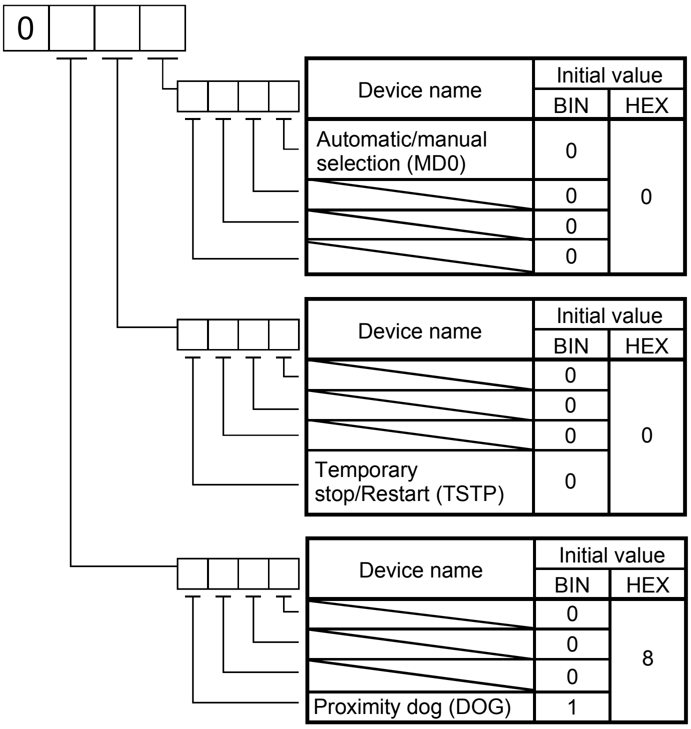

Device name	Initial value BIN	Initial value HEX
Automatic/manual selection (MD0)	0	0
	0	
	0	
	0	

Device name	Initial value BIN	Initial value HEX
	0	0
	0	
	0	
Temporary stop/Restart (TSTP)	0	

Device name	Initial value BIN	Initial value HEX
	0	8
	0	
	0	
Proximity dog (DOG)	1	

BIN 0: Used in CC-Link
BIN 1: Used in CN6 external input signal

No.	Symbol	Name and function	Initial value	Unit	Setting range
PD15		For manufacturer setting Do not change this value by any means.	0000h		
PD16	*DIAB	Input polarity selection Used to set the proximity dog input polarity. (Refer to section 5.6.) 0 0 0 □ Proximity dog input polarity 0: OFF indicates detection of the dog 1: ON indicates detection of the dog	0000h		Refer to name and function column.
PD17		For manufacturer setting Do not change this value by any means.	0000h		
PD18			0000h		
PD19	*DIF	Response level setting Used to select the input. 0 0 0 □ Input filter If external input signal causes chattering due to noise, etc., input filter is used to suppress it. 0: None 1: 0.88[ms] 2: 1.77[ms] 3: 2.66[ms] 4: 3.55[ms] 5: 4.44[ms]	0002h		Refer to name and function column.

No.	Symbol	Name and function	Initial value	Unit	Setting range
PD20	*DOP1	Function selection D-1 Select the stop processing at forward rotation stroke end (LSN)/reverse rotation stroke end (LSN) OFF and the base circuit status at reset (RY(N+1)A or RY(n+3)A) ON. 0 □ □ □ Stopping method for Forward rotation stroke end (LSP) off or Reverse rotation stroke end (LSN) off 0: Sudden stop (home position erased) 1: Slow stop (home position erased) 2: Slow stop (Deceleration to a stop by deceleration time constant) 3: Sudden stop (Stop by remaining move distance clear) Selection of base circuit status at reset (RY(n+1)A or RY(n+3)A)ON 0: Base circuit not switched off 1: Base circuit switched off Stopping method used when software limit is valid 0: Sudden stop (home position erased) 1: Slow stop (home position erased) 2: Slow stop (Deceleration to a stop by deceleration time constant) 3: Sudden stop (Stop by remaining move distance clear) As in the following parameter settings, when the home position is lost by the forward rotation stroke end, reverse rotation stroke end, or the software limit detection, the home position return completion (ZP) turns on by turning OFF/ON the servo-on (RYn0). In this case, there is no need to perform the home position return again. 1. In absolute position detection system Parameter No.PA03: □ □ □ 1 (Select the absolute position detection system) Parameter No.PA01: □ □ □ 0 (Select the absolute value command system) 2. In incremental system Parameter No.PA03: □ □ □ 0 (Select the incremental system) Parameter No.PA01: □ □ □ 0 (Select the absolute value command system) Parameter No.PA04: □ □ □ 1 (Follow-up valid)	0010h		Refer to name and function column.
PD21		For manufacturer setting Do not change this value by any means.	0000h		
PD22	*DOP3	Function selection D-3 Set the clear (RYnF). 0 0 0 □ Clear (RYnF) selection 0: Invalid 1: Droop pulses are cleared on the leading edge. 2: While on, droop pulses are always cleared.	0000h		Refer to name and function column.
PD23		For manufacturer setting Do not change this value by any means.	0000h		

<table>
<tr><th>No.</th><th>Symbol</th><th>Name and function</th><th>Initial value</th><th>Unit</th><th>Setting range</th></tr>
<tr><td>PD24</td><td>*DOP5</td><td>Function selection D-5
Select the output status of the warning (WNG).
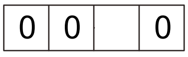

Selection of output device at warning occurrence
Select the warning (RXnA) and trouble (RX(n+1)A or RX(n+3)A) output status at warning occurrence.
<table>
<tr><th>Setting</th><th>(Note) Device status</th></tr>
<tr><td>0</td><td>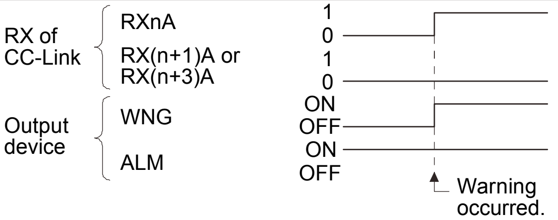
</td></tr>
<tr><td>1</td><td>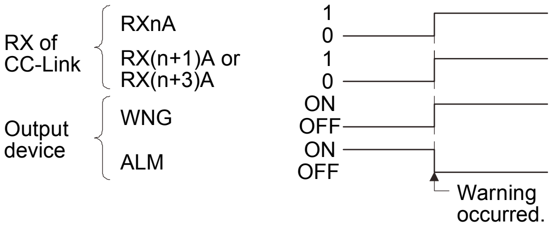
</td></tr>
</table>
Note. 0: OFF
1: ON</td><td>0000h</td><td></td><td></td></tr>
</table>

No.	Symbol	Name and function	Initial value	Unit	Setting range
PD25	A8DT	CC-Link communication error (A8D) detection time Select "CC-Link communication error (A8D) detection delay" with parameter No.PC50 to enable this parameter. When parameter No.PC50 is set to "0000h", 10ms is set. Set a value converted from decimal to hexadecimal. The setting range is up to 1000ms. A value exceeding the setting range will be limited within the range. For example) If "03E8h" is set, 1000ms will be set. The converted decimal value of "1388h" is 10000ms, but it is limited to 1000ms, which is the upper limit of the setting range. ⚠CAUTION · If not detecting CC-Link communication error (A8D), use the initial setting value for the communication time-out detection time. When you change the setting value, do not set an unnecessarily long time period. Doing so interferes swift stop operation at an occurrence of CC-Link communication error (A8D). This parameter is available with servo amplifiers with software version A8 or later. When this parameter is set using MR Configurator with software version C5 or earlier, the parameter name is not displayed. However, the setting value is changeable. Follow the instructions in this Instruction Manual to set the value.	0000h	ms	0000h to 03E8h
PD26		For manufacturer setting Do not change this value by any means.	0064h		
PD27			0000h		
PD28			0000h		
PD29			0000h		
PD30			0000h		

6.4.3 Stopping method when forward rotation stroke end (LSP) or reverse rotation stroke end (LSN) is off

The setting of the first digit of parameter No.PD20 enables to select a stopping method of the servo motor when the forward rotation stroke end (LSP) or reverse rotation stroke end (LSN) turns off.

Parameter No.PD20

Stopping method for Forward rotation stroke end (LSP) off
or Reverse rotation stroke end (LSN) off
0: Sudden stop (home position erased)
1: Slow stop (home position erased)
2: Slow stop (Deceleration to a stop by deceleration time constant)
3: Sudden stop (Stop by remaining move distance clear)

Setting value of parameter No.PD20	Operation status		Remarks
	When rotating at constant speed	When decelerating to stop	
□□□0 (Initial value)	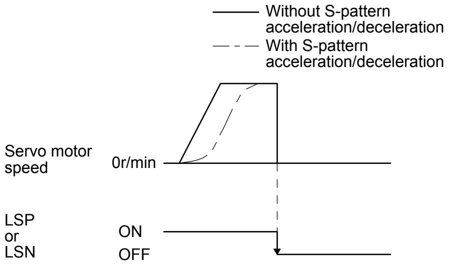	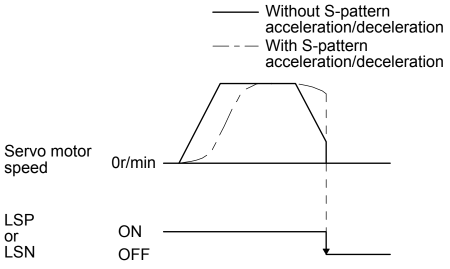	Clears droop pulses and stops. Erases the home position. A difference occurs between the command position and the current position. Execute a home position return again.
□□□1	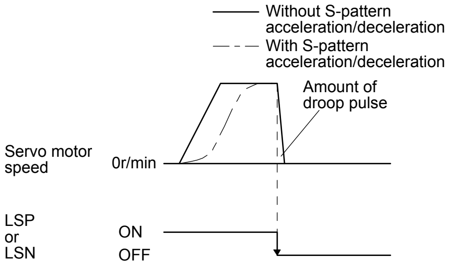	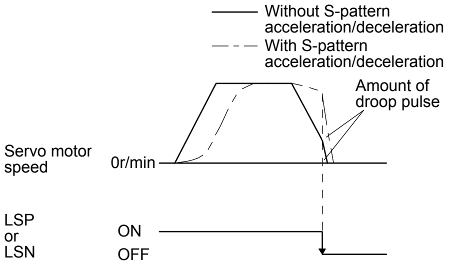	Moves for the amount of droop pulse and stops. Erases the home position. A difference occurs between the command position and the current position. Execute a home position return again.
□□□2	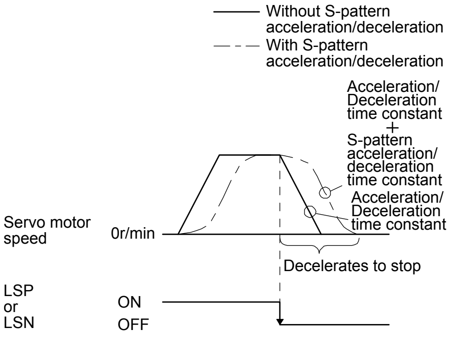	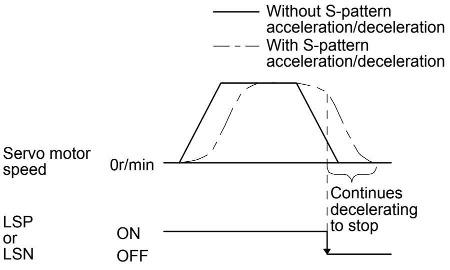	Decelerates to stop at the deceleration time constant. Continues to rotate for the amount of S-pattern acceleration/deceleration time constant delay. Keeps the home position.
□□□3	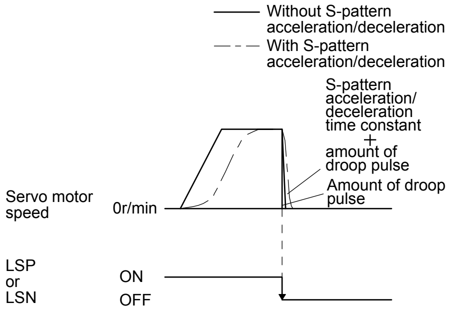	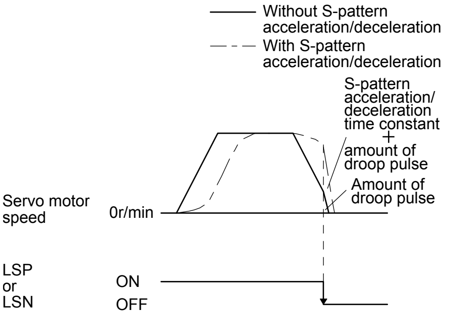	Moves for the amount of droop pulse and stops. Continues to rotate for the amount of S-pattern acceleration/deceleration time constant delay. Keeps the home position.

6.4.4 Stopping method when a software limit is detected

A stopping method of the servo motor when a software limit (parameter No.PC31 to PC34) is detected can be selected. The software limit imposes a limit on the command position, which is controlled in the servo amplifier. Therefore, actual stop position does not reach to the software limit set position.

Parameter No.PD20

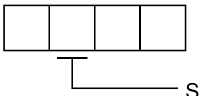

Stopping method used when software limit is detected
0: Sudden stop (home position erased)
1: Slow stop (home position erased)
2: Slow stop (Deceleration to a stop by deceleration time constant)
3: Sudden stop (Stop by remaining move distance clear)

Setting value of parameter No.PD20	Operation status		Remarks
	When rotating at constant speed	When decelerating to stop	
□0□□ (Initial value)	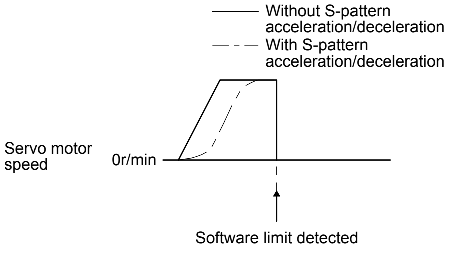	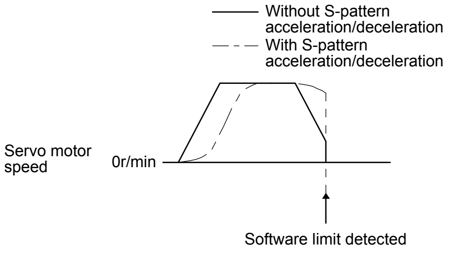	Clears droop pulses and stops. Erases the home position. A difference occurs between the command position and the current position. Execute a home position return again.
□1□□	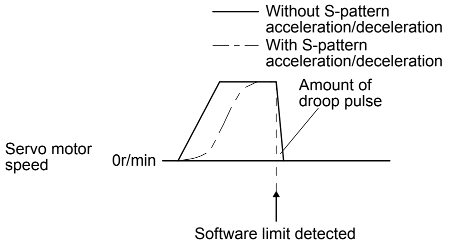	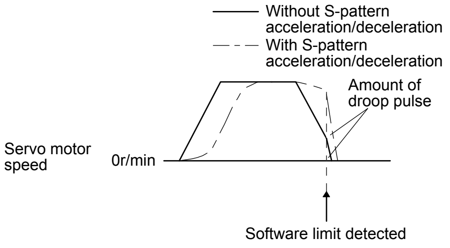	Moves for the amount of droop pulse and stops. Erases the home position. A difference occurs between the command position and the current position. Execute a home position return again.
□2□□	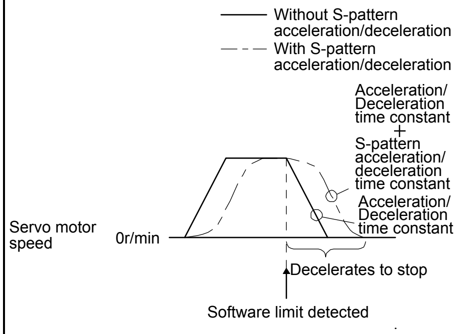	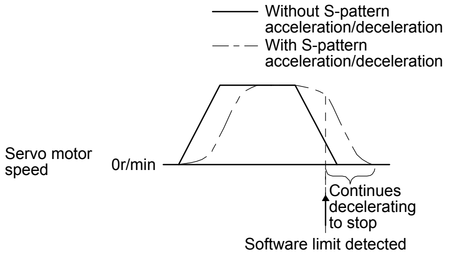	Decelerates to stop at the deceleration time constant. Continues to rotate for the amount of S-pattern acceleration/decelerati on time constant delay. Keeps the home position.
□3□□	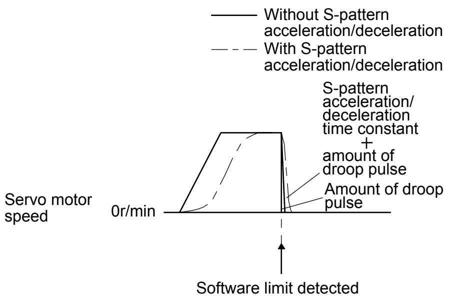	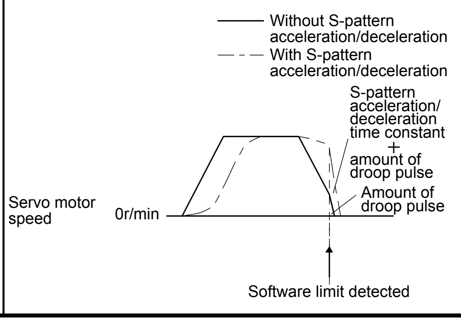	Moves for the amount of droop pulse and stops. Continues to rotate for the amount of S-pattern acceleration/decelerati on time constant delay. Keeps the home position.

7. MR Configurator

The MR Configurator uses the communication function of the servo amplifier to perform parameter setting changes, graph display, test operation, etc. on a personal computer.

7.1 Specifications

<table>
<tr><th>Item</th><th>Description</th></tr>
<tr><td>Compatibility with a servo amplifier</td><td>The following table shows MR Configurator software version for each servo amplifier.
<table>
<tr><th colspan="2">MR Configurator</th><th colspan="2">Compatible servo amplifier</th></tr>
<tr><th>Model</th><th>Software version</th><th>100V class
200V class</th><th>400V class</th></tr>
<tr><td rowspan="3">MRZJW3-SETUP221</td><td>B0 to B3</td><td></td><td></td></tr>
<tr><td>B4 to B6</td><td>○</td><td></td></tr>
<tr><td>B8 or later</td><td>○</td><td>○</td></tr>
</table></td></tr>
<tr><td>Baud rate [bps]</td><td>115200, 57600, 38400, 19200, 9600</td></tr>
<tr><td>Monitor</td><td>Display, I/O interface display, high speed monitor, trend graph</td></tr>
<tr><td>Alarm</td><td>Display, history, amplifier data</td></tr>
<tr><td>Diagnostic</td><td>No motor rotation, system information, tuning data, absolute encoder data, Axis name setting.</td></tr>
<tr><td>Parameters</td><td>Parameter list, device setting, turning, change list, detailed information</td></tr>
<tr><td>Test operation</td><td>Jog operation, positioning operation, motor-less operation, Do forced output, program operation, single-step feed, parameter copy.</td></tr>
<tr><td>Advanced function (Note)</td><td>Machine analyzer, gain search, machine simulation, robust disturbance compensation, advanced gain search.</td></tr>
<tr><td>Point data</td><td>Point table</td></tr>
<tr><td>File operation</td><td>Data read, save, delete, print</td></tr>
<tr><td>Others</td><td>Automatic demo, help display</td></tr>
</table>

Note. The advanced gain search is supported by MR Configurator with software version C2 or later.

7.2 System configuration

(1) Components

To use this software, the following components are required in addition to the servo amplifier and servo motor. Follow the installation guide for each equipment to configure the system.

Equipment		Description
(Note 1) Personal computer (IBM PC/AT compatible)	(Note 2, 3, 4) OS (English version)	Windows® 98, Windows® Me, Windows® 2000 Professional, Windows® XP Home Edition/ Professional, Windows Vista® Home Basic/Home Premium/Business/Ultimate/Enterprise, Windows® 7 Starter/Home Premium/Professional/Ultimate/Enterprise
	Processor	Pentium® 133MHz or more (Windows® 98, Windows® 2000 Professional) Pentium® 150MHz or more (Windows® Me) Pentium® 300MHz or more (Windows® XP Home Edition/ Professional) 32-bit (x86) processor of 1GHz or higher (Windows Vista® Home Basic/Home Premium/Business/Ultimate/Enterprise, Windows® 7 Starter/Home Premium/Professional/Ultimate/Enterprise)
	Memory	24MB or more (Windows® 98) 32MB or more (Windows® Me, Windows® 2000 Professional) 128MB or more (Windows® XP Home Edition/ Professional) 512MB or more (Windows Vista® Home Basic) 1GB or more (Windows Vista® Home Premium/Business/Ultimate/Enterprise, Windows® 7 Starter/Home Premium/Professional/Ultimate/Enterprise)
	Hard Disk	130MB or more of free space
Browser		Windows® Internet Explorer® 4.0 or more
Display		One whose resolution is 1024×768 or more and that can provide a high color (16 bit) display. Connectable with the above personal computer.
Keyboard		Connectable with the above personal computer.
Mouse		Connectable with the above personal computer.
Printer		Connectable with the above personal computer.
USB cable		MR-J3USBCBL3M
RS-422/232C conversion cable		DSV-CABV (Diatrend) is recommended.

Note 1. On some personal computers, MR Configurator may not run properly.

2. When Windows XP, Windows Vista, or Windows 7 is used, the following functions cannot be used. If used, the product may not run properly.
   - Windows Program Compatibility mode
   - Fast User Switching
   - Remote Desktop
   - Large Fonts Mode (Display property)

   Also, 64-bit OS is not supported.
3. When Windows 7 is used, the following functions cannot be used.
   - Windows XP mode
   - Windows touch
4. When using this software with Windows Vista and Windows 7, log in as a user having USER authority or higher.

(2) Connection with servo amplifier

(a) For use of USB

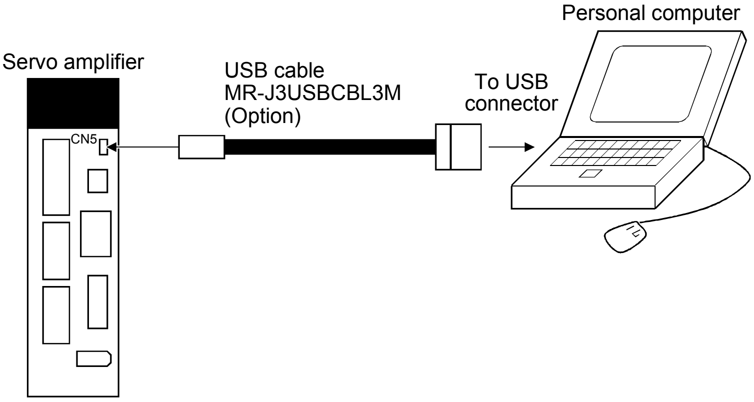

(b) For use of RS-422

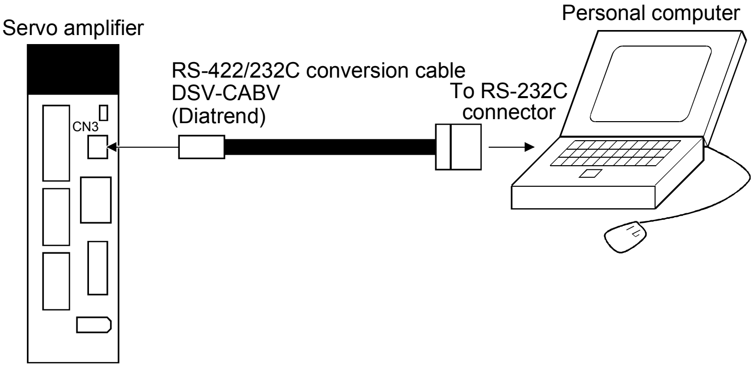

(c) For use of RS-422 to make multidrop connection

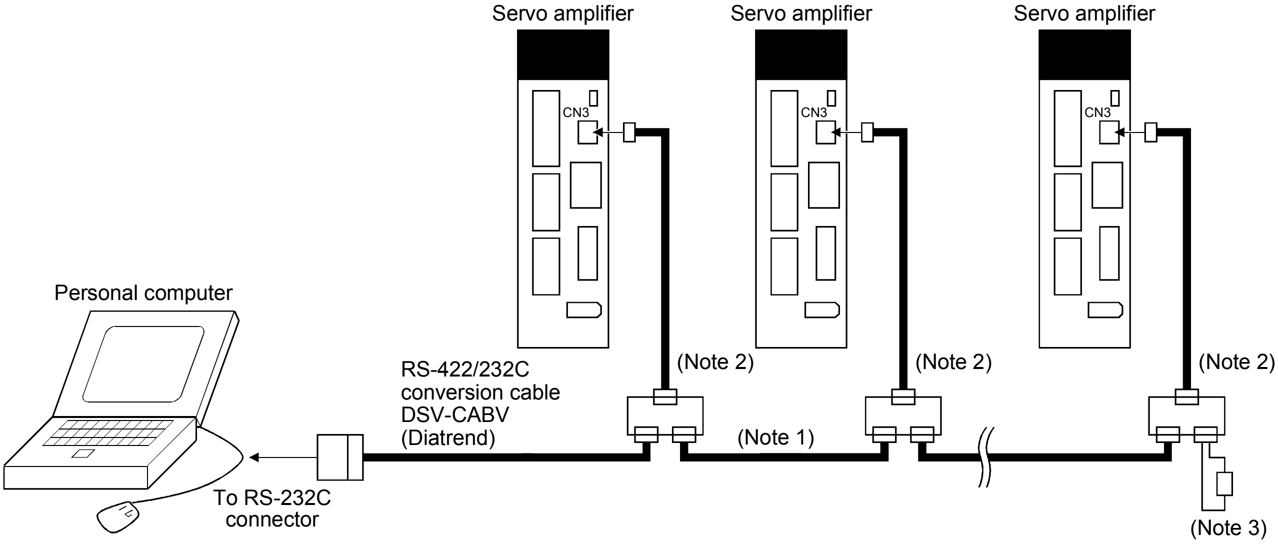

Note 1. Refer to section 15.1 for cable wiring.

2. The BMJ-8 (Hakko Electric Machine Works) is recommended as the branch connector.

3. The final axis must be terminated between RDP (pin No. 3) and RDN (pin No.6) on the receiving side (servo amplifier) with a 150Ω resistor.

7.3 Station selection

Click "Setup" on the menu bar and click "System settings" on the menu.

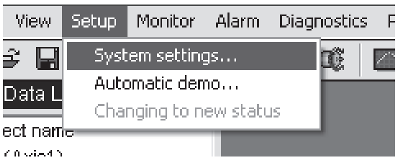

When the above choices are made, the following window appears.

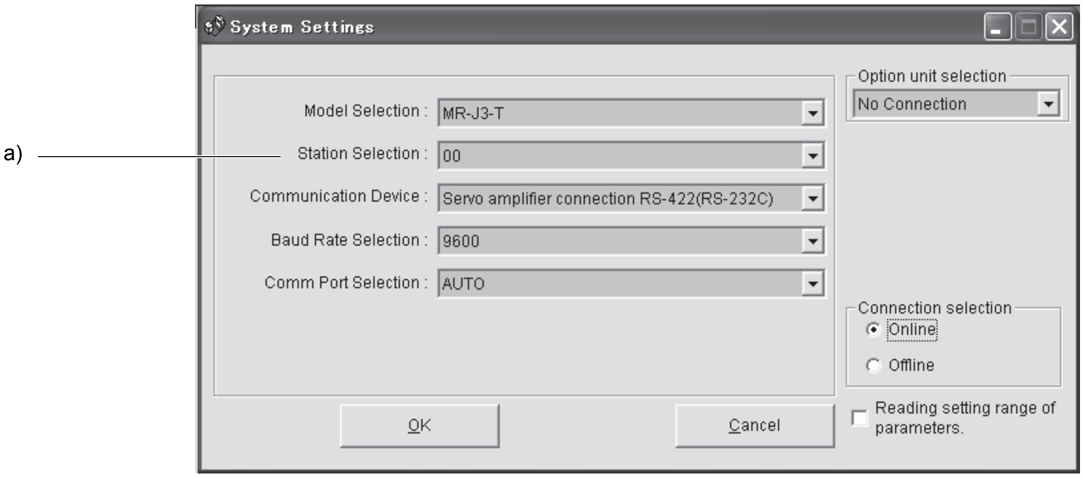

Model Selection : MR-J3-T
Station Selection : 00
Communication Device : Servo amplifier connection RS-422(RS-232C)
Baud Rate Selection : 9600
Comm Port Selection : AUTO

Option unit selection: No Connection

Connection selection
● Online
○ Offline

☐ Reading setting range of parameters.

(1) Station number selection

Choose the station number in the combo box (a)).

POINT
・This setting should be the same as the station number which has been set in the parameter in the servo amplifier used for communication.

(2) Closing of the station selection window

Click the "OK" button to close the window.

7.4 Parameters

Click "Parameters" on the menu bar and click "Parameter list" on the menu.

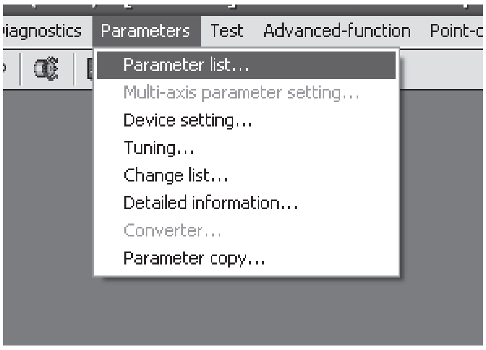

When the above choices are made, the following window appears.

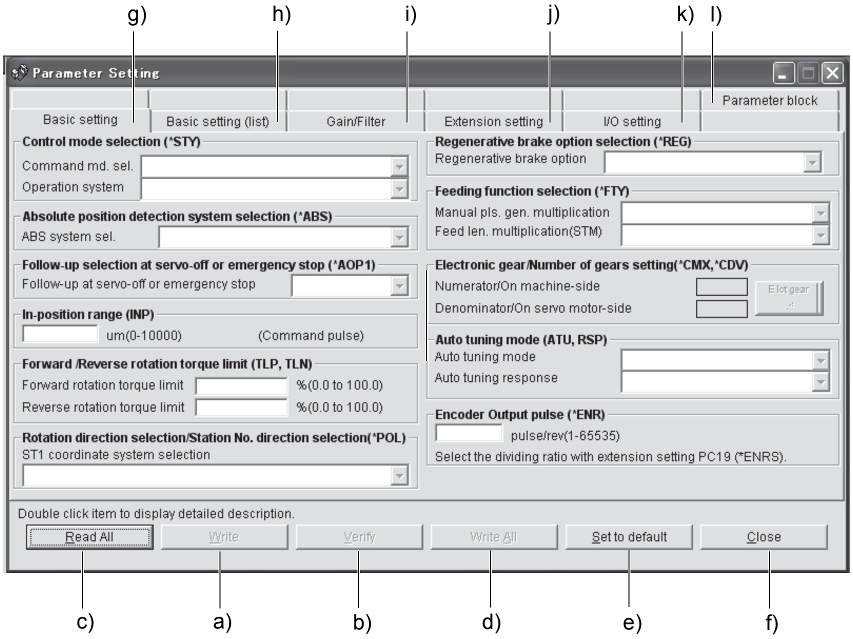

(1) Parameter value write (a))
Click the parameter whose setting was changed and press the "Write" button to write the new parameter setting to the servo amplifier.

(2) Parameter value verify (b))
Click the "Verify" button to verify all parameter values being displayed and the parameter values of the servo amplifier.

(3) Parameter value batch-read (c))
Click the "Read All" button to read and display all parameter values from the servo amplifier.

(4) Parameter value batch-write (d))

Click the "Write All" button to write all parameter values to the servo amplifier.

(5) Parameter default value indication (e))

Click the "Set to default" button to show the initial value of each parameter.

(6) Basic settings for parameters (g))

Used to make the basic settings such as control mode selection and absolute position detection system selection.

(7) Basic setting parameters (h))

Used to make the basic settings for the servo amplifier. Select a parameter to be changed the setting, enter a new value to "Set value" and click "Enter".

(8) Gain/Filter parameters (i))

Used to adjust the gain manually. Select a parameter to be changed, enter a new value to "Set value" and click "Enter".

(9) Extension setting parameters (j))

Used to make the setting unique to MR-J3-□T servo amplifier. Select a parameter to be changed, enter a new value to "Set value" and click "Enter".

(10) I/O setting parameters (k))

Used to change the I/O device of the servo amplifier. Select a parameter to be changed, enter a new value to "Set value" and click "Enter".

(11) Parameter block (l))

Used to set the availability of parameter write.

(12) Parameter data file read

Used to read and display the parameter values stored in the file. Use the "Project" menu on the menu bar to read.

(13) Parameter value storage

Used to store all parameter values being displayed on the window into the specified file. Use the "Project" menu on the menu bar to store.

(14) Parameter data list print

Used to print all parameter values being displayed on the window. Use the "Project" menu on the menu bar to print.

(15) Parameter list window closing (f))

Click the "Close" button to close the window. If the "Close" button is clicked without (1) parameter value write or (4) parameter value batch-write being performed, the parameter value changed is made invalid.

7.5 Point table

POINT

- The value of the parameter No. PA05 set on the parameter setting screen is not engaged with the STM (feed length multiplication) value on the point table list screen. Set the STM (feed length multiplication) value to the same as set in the parameter No. PA05 on the point table list screen.

Click "Point-data" on the menu bar and click "Point table" on the menu.

When the above choices are made, the following window appears.

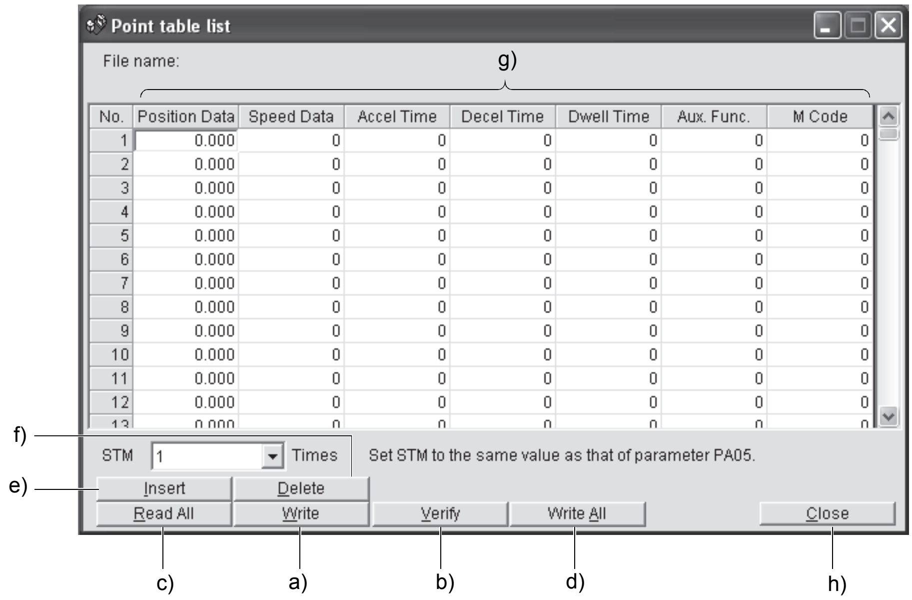

File name:

No.	Position Data	Speed Data	Accel Time	Decel Time	Dwell Time	Aux. Func.	M Code
1	0.000	0	0	0	0	0	0
2	0.000	0	0	0	0	0	0
3	0.000	0	0	0	0	0	0
4	0.000	0	0	0	0	0	0
5	0.000	0	0	0	0	0	0
6	0.000	0	0	0	0	0	0
7	0.000	0	0	0	0	0	0
8	0.000	0	0	0	0	0	0
9	0.000	0	0	0	0	0	0
10	0.000	0	0	0	0	0	0
11	0.000	0	0	0	0	0	0
12	0.000	0	0	0	0	0	0

STM 1 Times

Set STM to the same value as that of parameter PA05.

(1) Point table data write (a))

Click the point table data changed and press the "Write" button to write the new point table data to the servo amplifier.

(2) Point table data verify (b))

Click the "Verify" button to verify all data being displayed and the data of the servo amplifier.

(3) Point table data batch-read (c))

Click the "Read All" button to read and display all point table data from the servo amplifier.

(4) Point table data batch-write (d))

Click the "Write All" button to write all point table data to the servo amplifier.

(5) Point table data insertion (e))

Click the "Insert" button to insert one block of data into the position before the point table No. chosen. The blocks after the chosen point table No. are shifted down one by one.

(6) Point table data deletion (f))

Click the "Delete" button to delete all data in the point table No. chosen. The blocks after the chosen point table No. are shifted up one by one.

(7) Point table data change (g))

Click the data to be changed, enter a new value into the "Enter" input field, and press the enter key or Enter Data button.

(8) Point table data file read

Used to read and display the point table data stored in the file. Use the "Project" menu on the menu bar to read.

(9) Point table data storage

Used to store all point table data being displayed on the window into the specified file. Use the "Project" menu on the menu bar to store.

(10) Point table data list print

Used to print all point table data being displayed on the window. Use the "Project" menu on the menu bar to print.

(11) Point table data list window closing (h))

Click the "Close" button to close the window.

7.6 Device assignment method

> POINT
>
> - To use a device as an external I/O signal, the settings for the parameter No. PD12 and PD14 are required after the device is assigned according to the device setting described below.

(1) How to open the setting screen

Click "Parameters" on the menu bar and click "Device setting" in the menu.

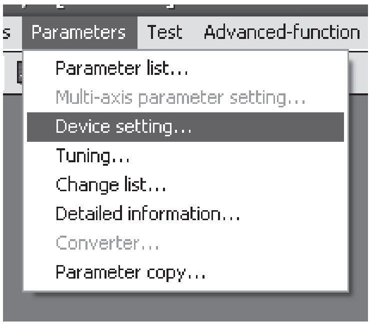

Making selection displays the following window.

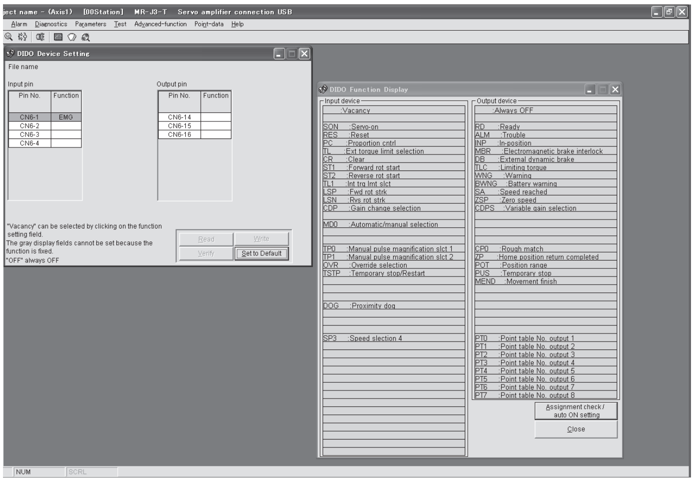

File name

Input pin

Pin No.	Function
CN6-1	EMG
CN6-2	
CN6-3	
CN6-4	

Output pin

Pin No.	Function
CN6-14	
CN6-15	
CN6-16	

"Vacancy" can be selected by clicking on the function setting field.
The gray display fields cannot be set because the function is fixed.
"OFF" always OFF

Input device

:Vacancy
SON :Servo-on
RES :Reset
PC :Proportion cntrl
TL :Ext torque limit selection
CR :Clear
ST1 :Forward rot start
ST2 :Reverse rot start
TL1 :Int trq lmt slct
LSP :Fwd rot strk
LSN :Rvs rot strk
CDP :Gain change selection
MD0 :Automatic/manual selection
TP0 :Manual pulse magnification slct 1
TP1 :Manual pulse magnification slct 2
OVR :Override selection
TSTP :Temporary stop/Restart
DOG :Proximity dog
SP3 :Speed slection 4

Output device

:Always OFF
RD :Ready
ALM :Trouble
INP :In-position
MBR :Electromagnetic brake interlock
DB :External dynamic brake
TLC :Limiting torque
WNG :Warning
BWNG :Battery warning
SA :Speed reached
ZSP :Zero speed
CDPS :Variable gain selection
CP0 :Rough match
ZP :Home position return completed
POT :Position range
PUS :Temporary stop
MEND :Movement finish
PT0 :Point table No. output 1
PT1 :Point table No. output 2
PT2 :Point table No. output 3
PT3 :Point table No. output 4
PT4 :Point table No. output 5
PT5 :Point table No. output 6
PT6 :Point table No. output 7
PT7 :Point table No. output 8

(2) Screen explanation

(a) DIDO device setting window screen

This is the device assignment screen of the servo amplifier displays the pin assignment status of the servo amplifier.

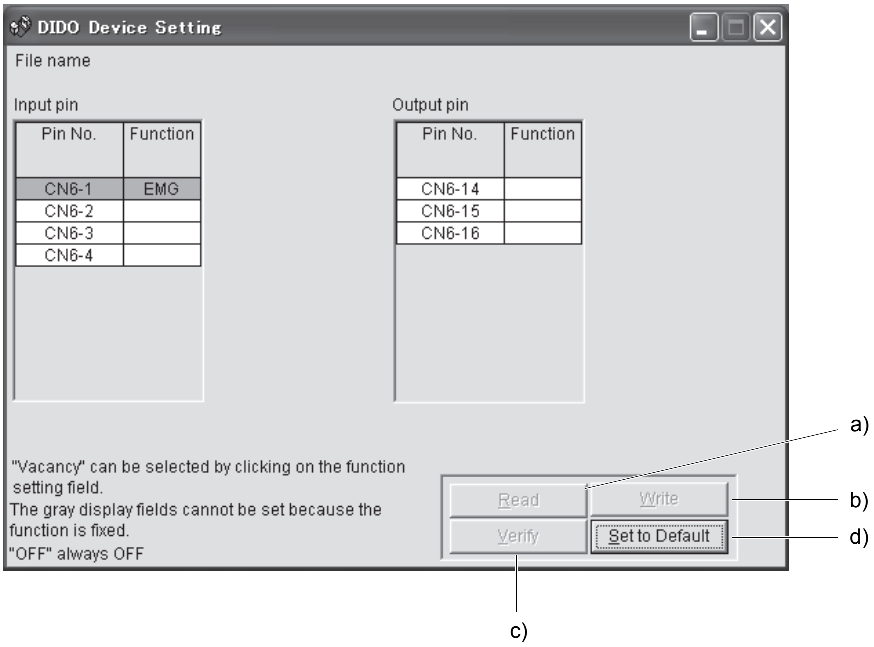

File name

Input pin

Pin No.	Function
CN6-1	EMG
CN6-2	
CN6-3	
CN6-4	

Output pin

Pin No.	Function
CN6-14	
CN6-15	
CN6-16	

"Vacancy" can be selected by clicking on the function setting field.
The gray display fields cannot be set because the function is fixed.
"OFF" always OFF

1) Read of function assignment (a))

Click the "Read" button to read and display all functions assigned to the pins from the servo amplifier.

2) Write of function assignment (b))

Click the "Write" button to write all pins in which the functions are assigned to the servo amplifier.

3) Verify of function assignment (c))

Click the "Verify" button verifies the function assignment in the servo amplifier with the device information on the screen.

4) Initial setting of function assignment (d))

Click the "Set to Default" button initializes the function assignment.

(b) DIDO function display window screen

This screen is used to select the device assigned to the pins.

The functions displayed below * and * are assignable.

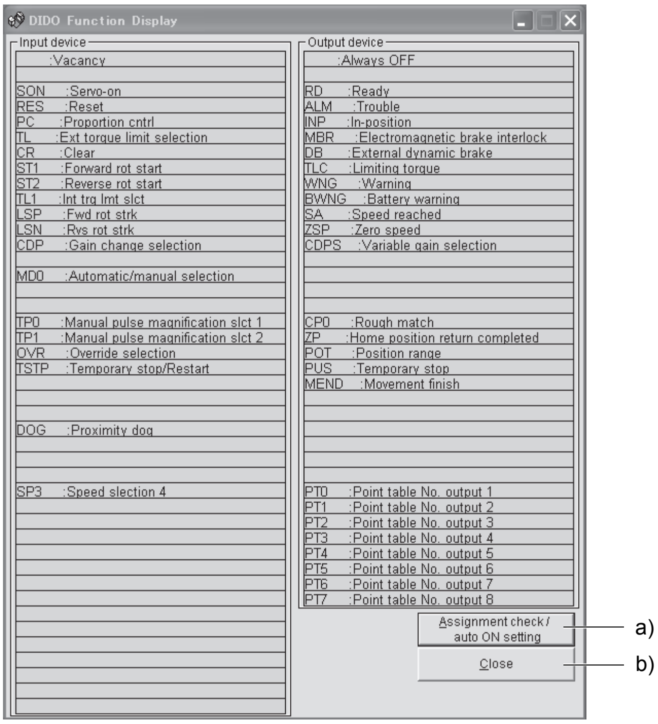

Input device

:Vacancy
SON :Servo-on
RES :Reset
PC :Proportion cntrl
TL :Ext torque limit selection
CR :Clear
ST1 :Forward rot start
ST2 :Reverse rot start
TL1 :Int trq lmt slct
LSP :Fwd rot strk
LSN :Rvs rot strk
CDP :Gain change selection
MD0 :Automatic/manual selection
TP0 :Manual pulse magnification slct 1
TP1 :Manual pulse magnification slct 2
OVR :Override selection
TSTP :Temporary stop/Restart
DOG :Proximity dog
SP3 :Speed slection 4

Output device

:Always OFF
RD :Ready
ALM :Trouble
INP :In-position
MBR :Electromagnetic brake interlock
DB :External dynamic brake
TLC :Limiting torque
WNG :Warning
BWNG :Battery warning
SA :Speed reached
ZSP :Zero speed
CDPS :Variable gain selection
CP0 :Rough match
ZP :Home position return completed
POT :Position range
PUS :Temporary stop
MEND :Movement finish
PT0 :Point table No. output 1
PT1 :Point table No. output 2
PT2 :Point table No. output 3
PT3 :Point table No. output 4
PT4 :Point table No. output 5
PT5 :Point table No. output 6
PT6 :Point table No. output 7
PT7 :Point table No. output 8

Move the pointer to the place of the function to be assigned. Drag and drop it as-is to the pin you want to assign in the DIDO device setting window.

1) Assignment checking, automatic ON setting (a))

Press this button to display the screen that shows the assignment list and enables auto ON setting. Refer to (2)(c) in this section for more information.

2) Quitting

Click "Close" button to exit from the window. (b))

(c) Function device assignment checking auto ON setting display

Click the "Assignment check / auto ON setting" button in the DIDO function display window displays the following window.

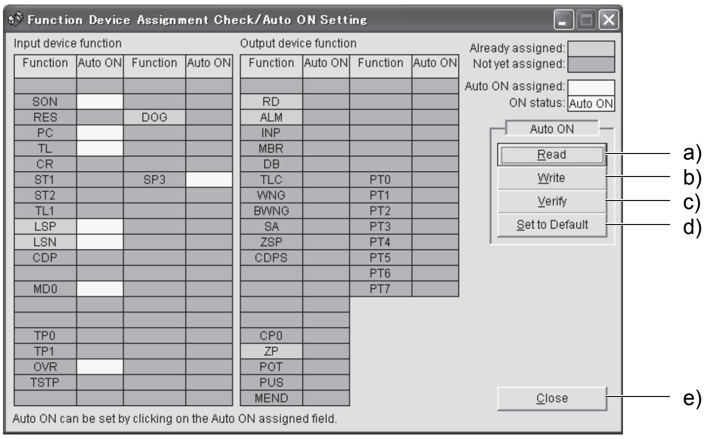

Input device function

Function	Auto ON	Function	Auto ON
SON			
RES		DOG	
PC			
TL			
CR			
ST1		SP3	
ST2			
TL1			
LSP			
LSN			
CDP			
MD0			
TP0			
TP1			
OVR			
TSTP			

Output device function

Function	Auto ON	Function	Auto ON
RD			
ALM			
INP			
MBR			
DB			
TLC		PT0	
WNG		PT1	
BWNG		PT2	
SA		PT3	
ZSP		PT4	
CDPS		PT5	
		PT6	
		PT7	
CP0			
ZP			
POT			
PUS			
MEND			

Auto ON can be set by clicking on the Auto ON assigned field.

The assigned functions are indicated by.

The functions assigned by auto ON are grayed. When you want to set auto ON to the function that is enabled for auto ON, click the corresponding cell. Clicking it again disables auto ON.

1) Auto ON read of function assignment (a))
   Click "Read" button reads the functions set for auto ON from the interface unit and extension IO unit.

2) Auto ON write of function assignment (b))
   Click "Write" button writes the functions currently set for auto ON to the interface unit and extension IO unit.

3) Auto ON verify of function assignment (c))
   Click "Verify" button verifies the current auto ON setting in the interface unit and extension IO unit with the auto ON setting on the screen.

4) Auto ON initial setting of function assignment (d))
   Click "Set to Default" button initializes the auto ON setting.

5) Quitting the function device assignment checking/auto ON setting window (e))
   Click "Close" button exits from the window.

7.7 Test operation

⚠ CAUTION

- When confirming the machine operation in the test operation mode, use the machine after checking that the safety mechanism such as the forced stop (EMG) operates.
- If any operational fault has occurred, stop operation using the forced stop (EMG).

7.7.1 Jog operation

POINT

- For the program operation, refer to the manual of MR Configurator.
- The servo motor will not operate if the forced stop (EMG), forward rotation stroke end (LSP) and reverse rotation stroke end (LSN) are off. Make automatic ON setting to turn on these devices or make device setting to assign them as external input signals and turn on across these signals and SG. (Refer to section 7.6.)
- When an alarm occurs, the JOG operation is automatically canceled.

Click "Test" on the menu bar and choose "Jog" on the menu.

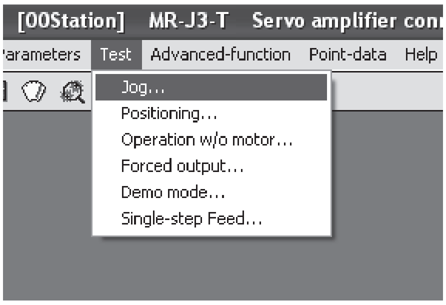

Clicking displays the confirmation window for switching to the test operation mode.

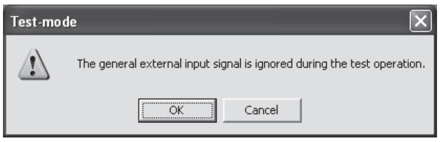

The general external input signal is ignored during the test operation.

Click the "OK" button to display the setting screen of the Jog operation.
During the servo on, the confirmation window indicating that the next operation is in the stop status is displayed.

Make sure that operation is at a stop.

Turn the servo off, confirm that the operation is in the stop status, and click the "OK" button to display the setting screen for the Jog operation.

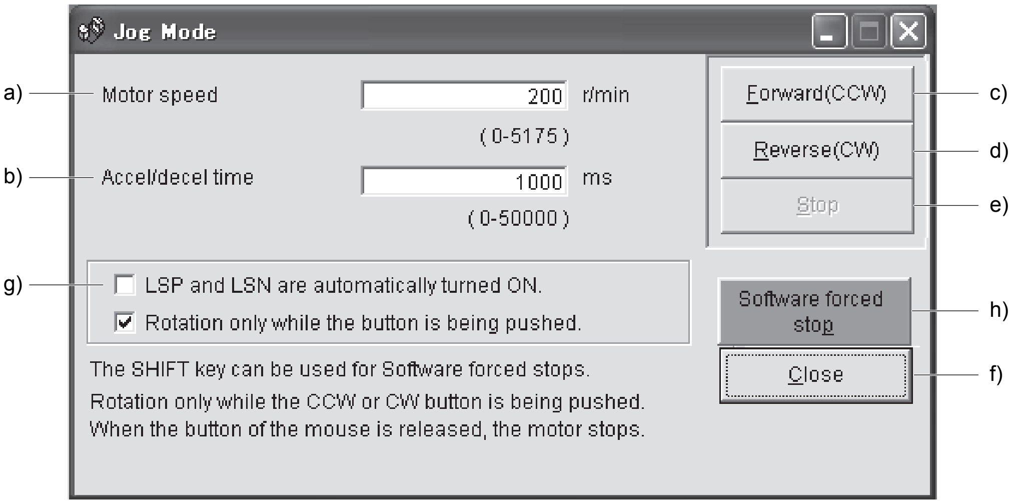

The SHIFT key can be used for Software forced stops.
Rotation only while the CCW or CW button is being pushed.
When the button of the mouse is released, the motor stops.

(1) Servo motor speed setting (a))
Enter a new value into the "Motor speed" input field and press the enter key.

(2) Acceleration/deceleration time constant setting (b))
Enter a new value into the "Accel/decel time" input field and press the enter key.

(3) Start button operation selection
Check the check box for operating the servo motor only while pressing the button. Uncheck the check box for stopping the operation by pressing the "Stop" or "Software forced stop" button.

(4) Servo motor start (c), d))
(a) When stopping the operation by pressing the "Stop" or "Software forced stop" button
Click the "Forward" button to rotate the servo motor in the CCW rotation direction.
Click the "Reverse" button to rotate the servo motor in the CW rotation direction.

(b) When operating the servo motor only while pressing the button
While pressing the "Forward" button, the servo motor rotates in the CCW rotation direction.
While pressing the "Reverse" button, the servo motor rotates in the CW rotation direction.

(5) Servo motor stop (e))
(a) When stopping the operation by pressing the "Stop" or "Software forced stop" button
Click the "Stop" button to stop the rotation of the servo motor.

(b) When operating the servo motor only while pressing the button
Release the "Forward" or "Reverse" button to stop the rotation of the servo motor.

(6) LSP/LSN (stroke end) automatic ON setting (g))
Put a check mark in the check box to automatically turn ON LSP/LSN. After selecting the check box, the LSP and the LSN of external signal are ignored.

(7) Servo motor software forced stop (h))
Click the "Software forced stop" button to stop the servo motor rotation immediately. When the "Software forced stop" button is enabled, the "Forward" and "Reverse" buttons cannot be used. Click the "Software forced stop" button again to make the "Forward" and "Reverse" buttons enabled.

(8) Jog operation window closing (f))
Click the "Close" button to cancel the jog operation mode and close the window.

(9) Switching to CC-Link operation mode
To switch from the test operation mode to the CC-Link operation mode, turn OFF the power of the servo amplifier.

7.7.2 Positioning operation

> **POINT**
>
> - The servo motor will not operate if the forced stop (EMG), forward rotation stroke end (LSP) and reverse rotation stroke end (LSN) are off. Make automatic ON setting to turn on these devices or make device setting to assign them as external input signals and turn on across these signals and DOCOM. (Refer to section 7.6.)

Click "Test" on the menu bar and click "Positioning" on the menu.

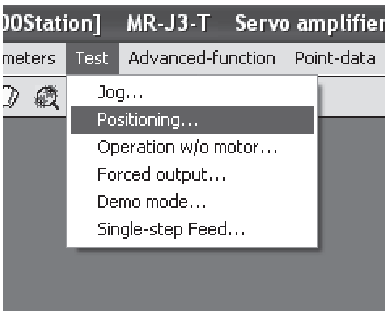

Clicking displays the confirmation window for switching to the test operation mode.

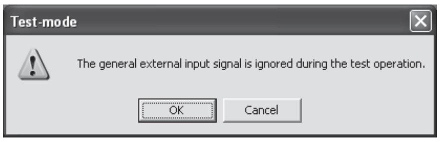

The general external input signal is ignored during the test operation.

Click the "OK" button to display the setting screen of the Positioning operation.
During the servo on, the confirmation window indicating that the next operation is in the stop status is displayed.

Make sure that operation is at a stop.

After confirming that the operation is in the stop status, click the "OK" button to display the setting screen for the positioning operation.

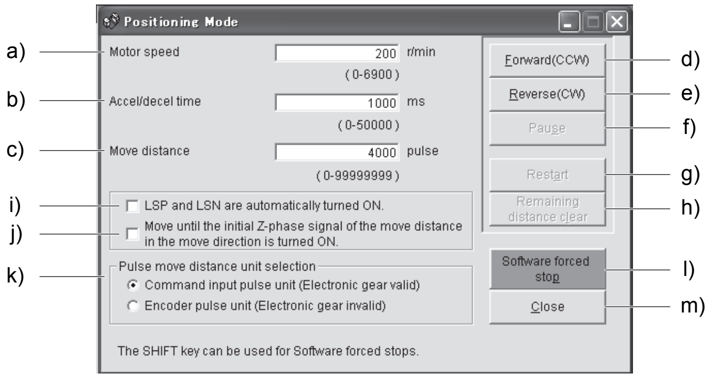

Motor speed 200 r/min (0-6900)

Accel/decel time 1000 ms (0-50000)

Move distance 4000 pulse (0-99999999)

☐ LSP and LSN are automatically turned ON.

☐ Move until the initial Z-phase signal of the move distance in the move direction is turned ON.

Pulse move distance unit selection

● Command input pulse unit (Electronic gear valid)

○ Encoder pulse unit (Electronic gear invalid)

The SHIFT key can be used for Software forced stops.

(1) Servo motor speed setting (a))

Enter a new value into the "Motor speed" input field and press the enter key.

(2) Acceleration/deceleration time constant setting (b))

Enter a new value into the "Accel/decel time" input field and press the enter key.

(3) Travel distance setting (c))

Enter a new value into the "Move distance" input field and press the enter key.

(4) Servo motor start (d), e))

Click the "Forward" button to rotate the servo motor in the forward rotation direction.

Click the "Reverse" button to rotate the servo motor in the reverse rotation direction.

(5) Temporary stop of servo motor (f))

Click the "Pause" button to stop the servo motor temporarily.

(6) Servo motor restart (g))

Click the "Restart" button during the temporary stop to restart the rotations for the remaining move distance.

Enter a new value into the "Motor speed" input field and press the enter key.

(7) Move distance clear (h))

Click the "Remaining distance clear" during the temporary stop to clear the remaining move distance.

(8) LSP/LSN (stroke end) automatic ON setting (i))

Put a check mark in the check box to automatically turn ON LSP/LSN. After selecting the check box, the LSP and the LSN of external signal are ignored.

(9) Automatic ON setting for the movement to the Z-phase signal (j))

To move to the first Z-phase signal of the move distance + move direction, put a check mark in the check box.

(10) Pulse move distance unit selection (k)

Select with the option buttons whether the travel distance set is in the command input pulse unit or in the encoder pulse unit.

(11) Servo motor software forced stop (1))

Click the "Software forced stop" button to stop the servo motor rotation immediately. When the "Software forced stop" button is enabled, the "Forward" and "Reverse" buttons cannot be used. Click the "Software forced stop" button again to make the "Forward" and "Reverse" buttons enabled.

(12) Positioning operation window closing (m))

Click the "Close" button to cancel the positioning operation mode and close the window.

(13) Switching to CC-Link operation mode

To switch from the test operation mode to the CC-Link operation mode, turn OFF the power of the servo amplifier.

7.7.3 Motor-less operation

POINT

- When this operation is used in an absolute position detection system, the home position cannot be restored properly.

Without a servo motor being connected, the output signals are provided and the servo amplifier display shows the status as if a servo motor is actually running in response to the external I/O signals.
The sequence of the programmable controller (PC) can be checked without connection of a servo motor.

Click "Test" on the menu bar and click "Operation w/o Motor" on the menu.

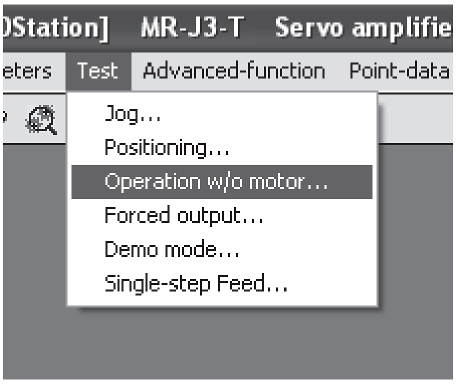

When the above choices are made, the following window appears.

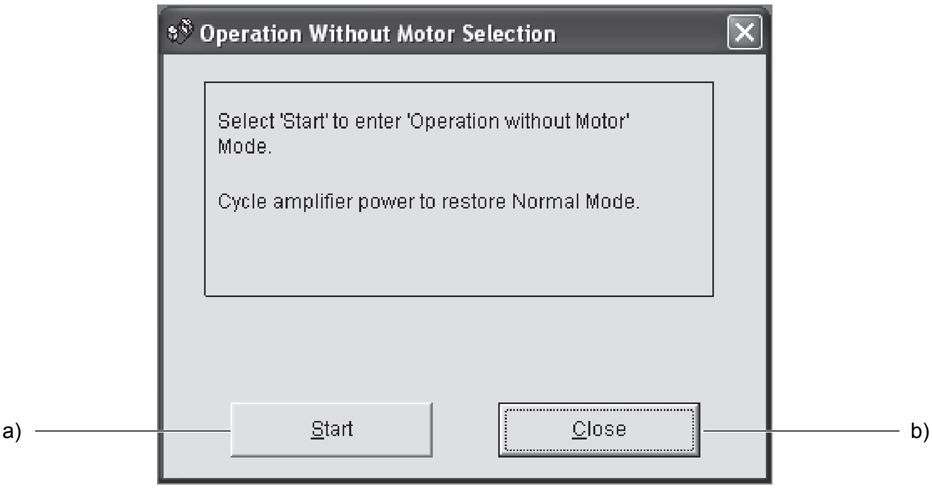

Select 'Start' to enter 'Operation without Motor' Mode.

Cycle amplifier power to restore Normal Mode.

(1) Execution of motor-less operation (a))
Click "Start" to perform motor-less operation.

(2) Termination of motor-less operation (b))
Click "Close" to close the window.
Note that just clicking the "Close" button does not cancel motor-less operation. To cancel motor-less operation, turn ON the power of the servo amplifier and switch to the CC-Link operation mode once.

7.7.4 Output signal (DO) forced output

POINT
- When an alarm occurs, the DO forced output is automatically canceled.

Each servo amplifier output signal is forcibly switched on/off independently of the output condition of the output signal.

Click "Test" on the menu bar and click "Forced output" on the menu.

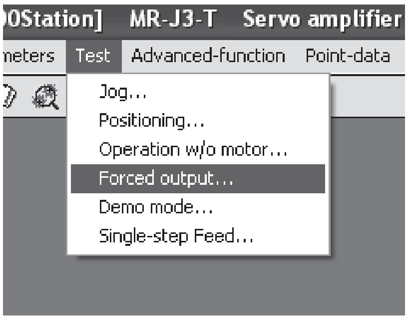

Clicking displays the confirmation window for switching to the test operation mode.

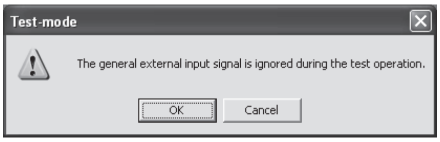

The general external input signal is ignored during the test operation.

Click the "OK" button to display the setting screen of the DO forced output.

During the servo on, the confirmation window indicating that the next operation is in the stop status is displayed.

Make sure that operation is at a stop.

After confirming that the operation is in the stop status, click the "OK" button to display the setting screen for the DO forced output.

When the above choices are made, the following window appears.

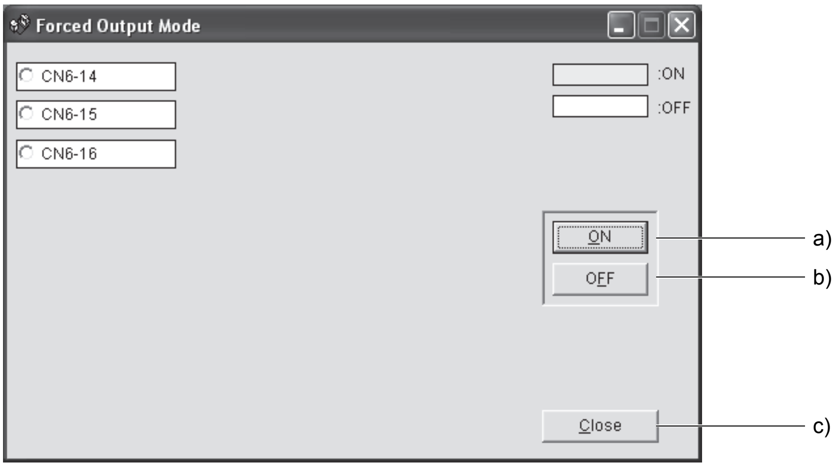

(1) Signal ON/OFF setting (a), b))

Choose the signal name or pin number and click the "ON" or "OFF" button to write the corresponding signal status to the servo amplifier.

(2) DO forced output window closing (c))

Click the "Close" button to cancel the DO forced output mode and close the window.

(3) Switching to CC-Link operation mode

To switch from the test operation mode to the CC-Link operation mode, turn OFF the power of the servo amplifier.

7.7.5 Single-step feed

POINT

- The servo motor will not operate if the forced stop (EMG), forward rotation stroke end (LSP) and reverse rotation stroke end (LSN) are off. Make automatic ON setting to turn on these devices or make device setting to assign them as external input signals and turn on across these signals and SG. (Refer to section 7.6.)
- The single-step feed operation cannot be used in indexer positioning operation and speed control operation.

Operation is performed in accordance with the preset point table No.

Click "Test" on the menu bar and click "Single-step Feed" on the menu.

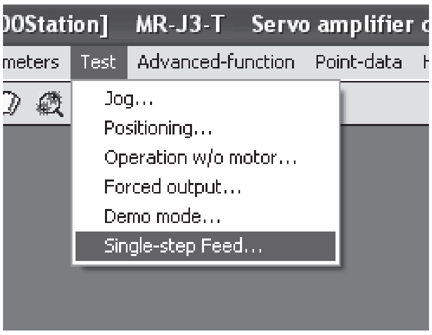

Clicking displays the confirmation window for switching to the test operation mode.

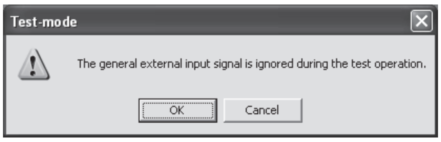

The general external input signal is ignored during the test operation.

Click the "OK" button to display the setting screen of the Single-step feed.
During the servo on, the confirmation window indicating that the next operation is in the stop status is displayed.

SON

Make sure that operation is at a stop.

After confirming that the operation is in the stop status, click the "OK" button.

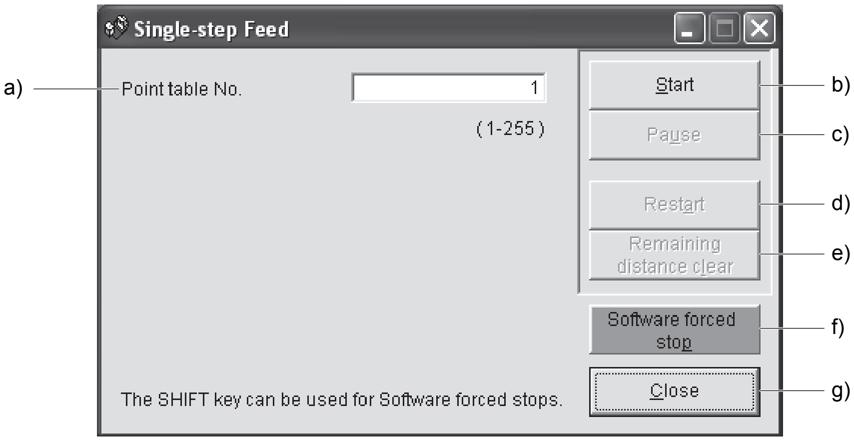

Single-step Feed

Point table No. 1

(1-255)

The SHIFT key can be used for Software forced stops.

(1) Point table No. setting (a))
Enter the point table No. into the "Point table No." input field and press the enter key.

(2) Servo motor start (b))
Click the "Start" button to rotate the servo motor.

(3) Temporary stop of servo motor (c))
Press the "Pause" button to stop the servo motor temporarily.

(4) Servo motor stop (c))
Click the "Pause" button again during a temporary stop of the servo motor to clear the remaining travel distance.

(5) Servo motor restart (d))
Click the "Restart" button during the temporary stop to restart the rotations for the remaining move distance.

(6) Move distance clear (e))
Click the "Remaining distance clear" during the temporary stop to clear the remaining move distance.

(7) Servo motor software forced stop (f))

Click the "Software forced stop" button to stop the servo motor rotation immediately. When the "Software forced stop" button is enabled, the "Start" button cannot be used. Click the "Software forced stop" button again to make the "Start" button enabled.

(8) Single-step feed window closing (g))

Click the "Close" button to cancel the single-step feed mode and close the window.

(9) Switching to CC-Link operation mode

To switch from the test operation mode to the CC-Link operation mode, turn OFF the power of the servo amplifier.

7.8 Alarm

7.8.1 Alarm display

POINT

- If a menu is clicked or any other operation is performed during alarm occurrence, the following message window appears. The example given here is the window that indicates an occurrence of Encoder error 1 (A16).

A servo alarm has occurred. Correct problem before proceeding. Alarm: 16:Encoder error 1

Encoder connector (CN2) disconnected.
Encoder fault.
Encoder cable faulty (Write breakage or shorted)
Encoder cable type (2-wire, 4-wire) selection was wrong in parameter setting.

The current alarm can be displayed.
To display the current alarm, click "Alarm" on the menu bar and click "Display" on the menu.

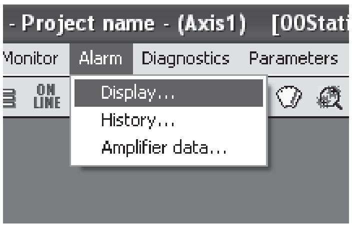

When the above choices are made, the following window appears.

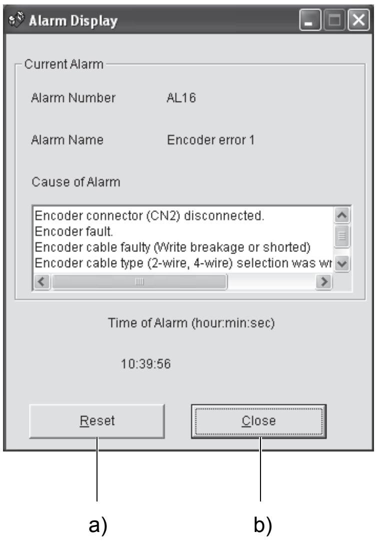

Alarm Number AL16

Alarm Name Encoder error 1

Cause of Alarm

Encoder connector (CN2) disconnected.
Encoder fault.
Encoder cable faulty (Write breakage or shorted)
Encoder cable type (2-wire, 4-wire) selection was wr

Time of Alarm (hour:min:sec)

10:39:56

(1) Current alarm display

The window shows the alarm number, name, cause, and occurrence time.
The following example is the window that indicates an occurrence of Encoder error 1 (A16).

(2) Alarm reset (a))

Click the "Reset alarm" button to reset the current alarm and clear alarms on the window. The alarm at this time is stored as the latest alarm.

(3) Closing the current alarm window (b))

Click the "Close" button to close the window.

7.8.2 Batch display of data at alarm occurrence

Monitor data during alarm occurrence is displayed.
To display monitor data, click "Alarm" on the menu bar and click "Amplifier data" on the menu.

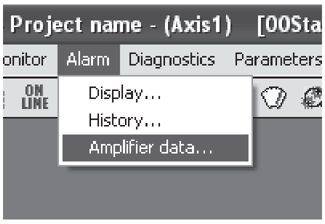

When the above choices are made, the following window appears.

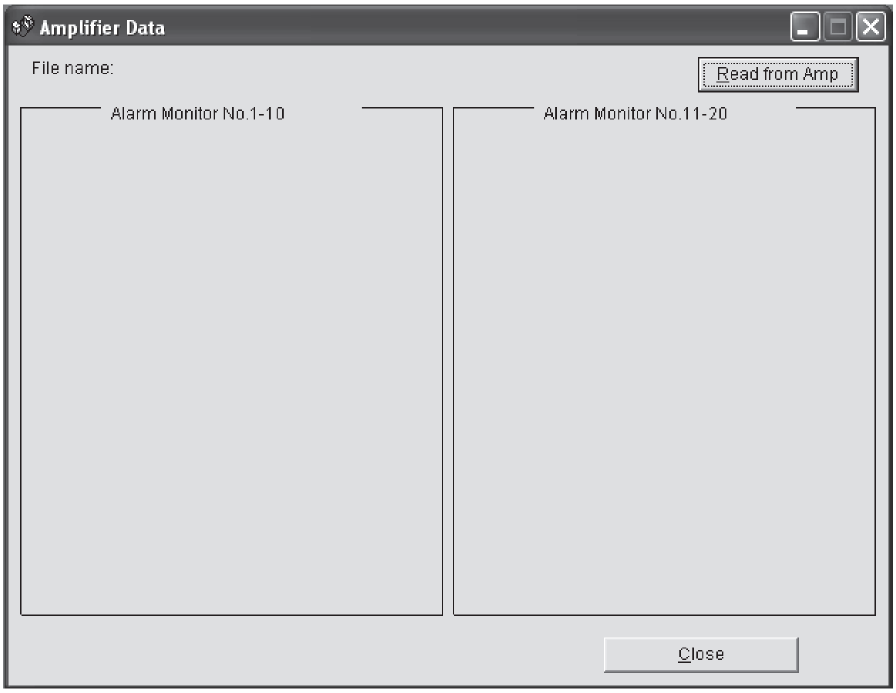

Click the "Read" button to read the monitor data at error occurrence from the servo amplifier. Read results are displayed as follows.

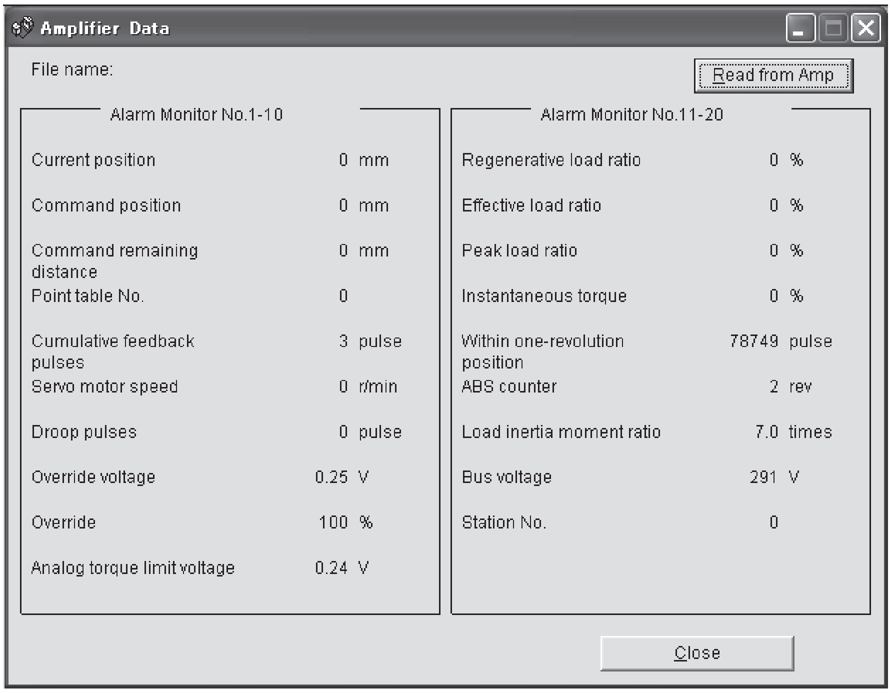

File name:

Alarm Monitor No.1-10

Current position	0	mm
Command position	0	mm
Command remaining distance	0	mm
Point table No.	0	
Cumulative feedback pulses	3	pulse
Servo motor speed	0	r/min
Droop pulses	0	pulse
Override voltage	0.25	V
Override	100	%
Analog torque limit voltage	0.24	V

Alarm Monitor No.11-20

Regenerative load ratio	0	%
Effective load ratio	0	%
Peak load ratio	0	%
Instantaneous torque	0	%
Within one-revolution position	78749	pulse
ABS counter	2	rev
Load inertia moment ratio	7.0	times
Bus voltage	291	V
Station No.	0	

7.8.3 Alarm history

Click "Alarm" on the menu bar and click "History" on the menu.

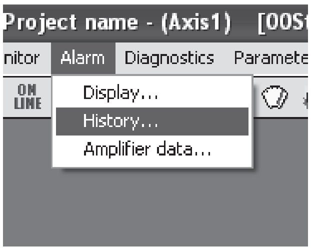

When the above choices are made, the following window appears.

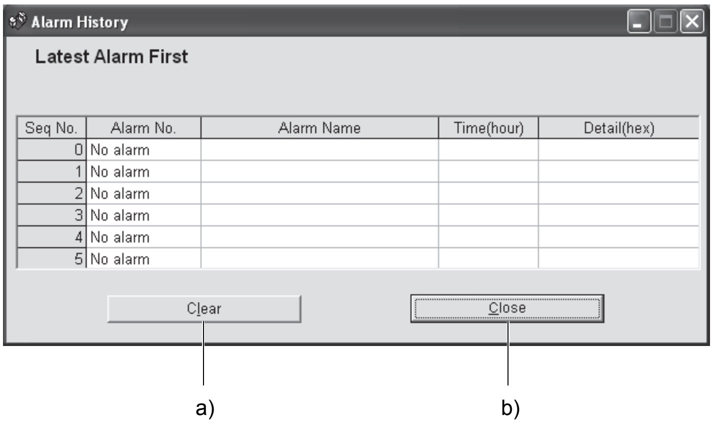

Seq No.	Alarm No.	Alarm Name	Time(hour)	Detail(hex)
0	No alarm			
1	No alarm			
2	No alarm			
3	No alarm			
4	No alarm			
5	No alarm			

(1) Alarm history display

The most recent six alarms are displayed. The smaller numbers indicate newer alarms.

(2) Alarm history clear (a))

Click the "Clear" button to clear the alarm history stored in the servo amplifier.

(3) Closing of alarm history window (b))

Click the "Close" button to close the window.

8. PARAMETER UNIT (MR-PRU03)

POINT
▪ Do not use MR-PRU03 parameter unit and MR Configurator together.

Perform simple data setting, test operation, parameter setting, etc. without MR Configurator by connecting the MR-PRU03 parameter unit to the servo amplifier.

8.1 External appearance and key explanations

This section gives the external appearance and explanations of the keys.

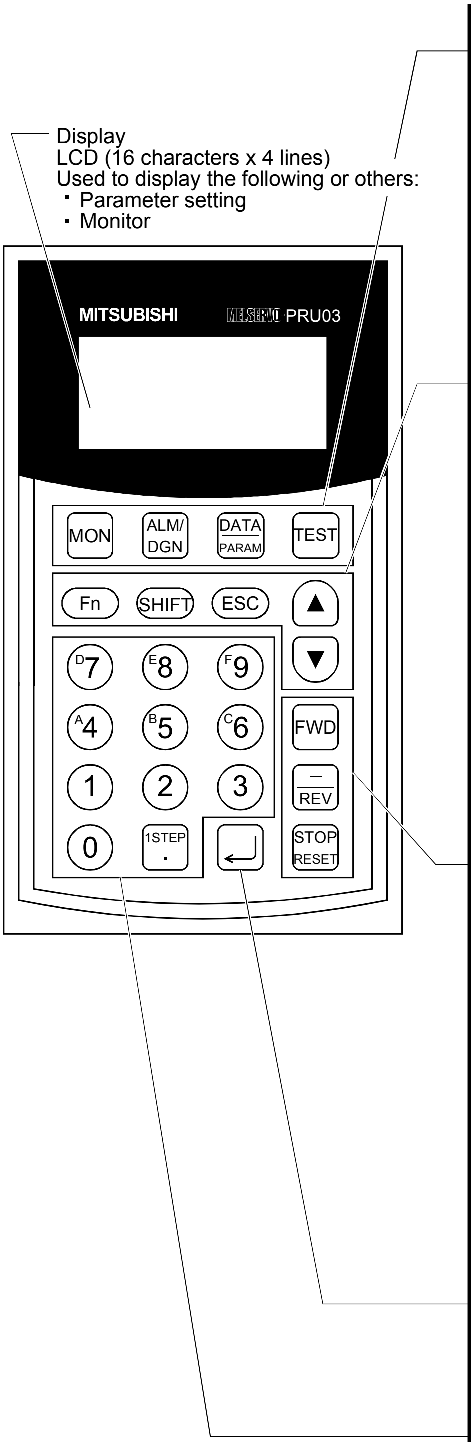
Display
LCD (16 characters x 4 lines)
Used to display the following or others:
- Parameter setting
- Monitor

Key		Key explanations
Mode key	MON	Monitor mode key ・Used to display the monitor screen.
	ALM/ DGN	Alarm/diagnosis mode ・Used to display the alarm/DO forced output/diagnosis selection screen.
	DATA PARAM	Parameter mode key ・Used to display parameter selection screen. ・Press this key while holding down the "SHIFT" key to display the point table setting screen.
	TEST	Test operation mode key ・Used to display the exit/JOG operation/positioning operation/motor-less operation/DO forced output/single-step feed selection screen.
Operation key	Fn	Function key ・Used to perform various operations in the test operation mode. ・Used to display the parameter range and point table setting range.
	SHIFT	SHIFT key ・Used to enter hexadecimal values. Press the "4" to "9" keys while holding down the "SHIFT" key to enter A to F. ・Press the "▲▼" keys while holding down the "SHIFT" key to move to the previous or next screen.
	ESC	ESC key ・Used to display the screen at one step upper hierarchical level. (not the pervious screen) Used to display the setting selection screen (the initial screen) of the monitor mode.
	▲ ▼	Scroll key ・Used to move the cursor across the screen or scroll the screen. Press this key while holding down the "SHIFT" key to move to the previous or next screen. ・Used to change parameter No. or point table No.
Test Operation key	FWD	Forward rotation key ・Used to start the forward rotation in the test operation mode (JOG operation/positioning operation).
	— REV	Symbol key/reverse rotation key ・Used to start the reverse rotation in the test operation mode (JOG operation/positioning operation). ・Used together with the "SHIFT" key to enter negative values. To exit the negative value entry mode, press the "SHIFT" key again and press the "-" key. ("-" disappears.)
	STOP RESET	Stop/reset key ・Used to stop temporarily in the JOG operation/positioning operation/single-step feed. ・The "RESET" key is valid when the "Fn" key is not pressed (i.e. at a stop). ・Used to reset alarms or alarm history, or clear cumulated monitor data or inputs. ・Normal operation cannot be stopped with this key.
Enter key	↵	Enter key ・Used to determine the selection, numerical values, etc. ・Used to determine to exit the test operation mode, or enter the motor-less operation. ・Used to switch ON/OFF in the DO output screen.
Numerical key	0 to F9	Numerical keys ・Used to enter parameter No., setting values, etc. ・Press the "4" to "9" keys while holding down the "SHIFT" key to enter A to F.
	1STEP .	Decimal point key ・Used to enter a decimal point. ・Used to start the single-step feed.

8.2 Specifications

Item		Description
Model		MR-PRU03
Power supply		Supplied from the servo amplifier
Functions	Parameter mode	Basic setting parameters, Gain/filter parameters, Extension setting parameters, I/O setting parameters
	Monitor mode (Status display)	Current position, Command position, Command remaining distance, Point table No., Feedback pulse value, Servo motor speed, Droop pulse value, Regenerative load factor, Effective load factor, Peak load factor, Instantaneous torque, Within one-revolution position, ABS counter, Load inertia moment ratio, Bus voltage
	Diagnosis mode	External I/O display, motor information
	Alarm mode	Current alarm, Alarm history
	Test operation mode	Jog operation, Positioning operation, DO forced output, Motor-less operation, Single-step feed
	Point table mode	Point data, Servo motor speed, Acceleration/deceleration time constant, Dwell, Auxiliary function
Display section		LCD system (16 characters × 4 lines)
Environment	Ambient temperature	−10 to +55℃ (14 to 131°F) (non-freezing)
	Ambient humidity	90%RH or less (non-condensing)
	Storage temperature range	−20 to +65℃ (−4 to 149°F) (non-freezing)
	Storage humidity range	90%RH or less (non-condensing)
	Ambience	Indoors (no direct sunlight) Free from corrosive gas, flammable gas, oil mist, dust and dirt
Mass [g] ([lb])		130 (0.287)

8.3 Outline dimension drawings

[Unit: mm]

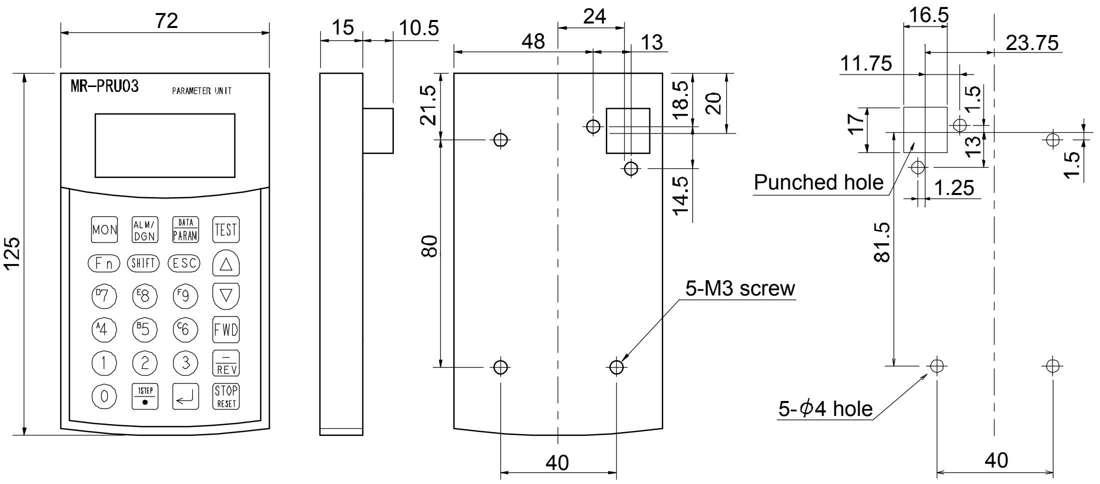

Front face Side face Back face Panel cut dimension

8.4 Connection with servo amplifier

8.4.1 Single axis

(1) Configuration diagram

Operate the single-axis servo amplifier. It is recommended to use the following cable.

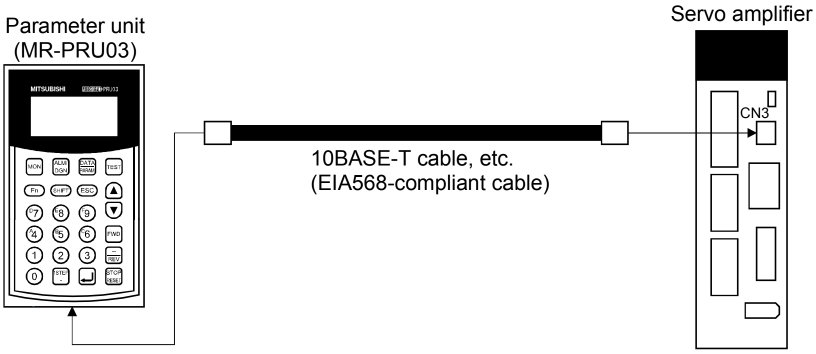

(2) Cable internal wiring diagram

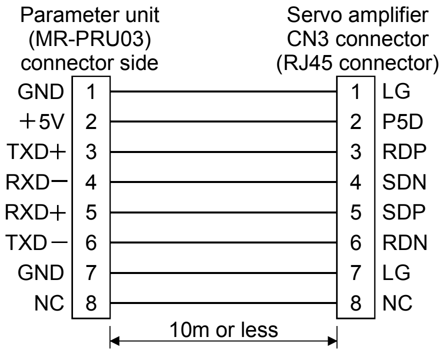

8.4.2 Multidrop connection

(1) Configuration diagram

Up to 32 axes of servo amplifiers from stations 0 to 31 can be operated on the same bus.

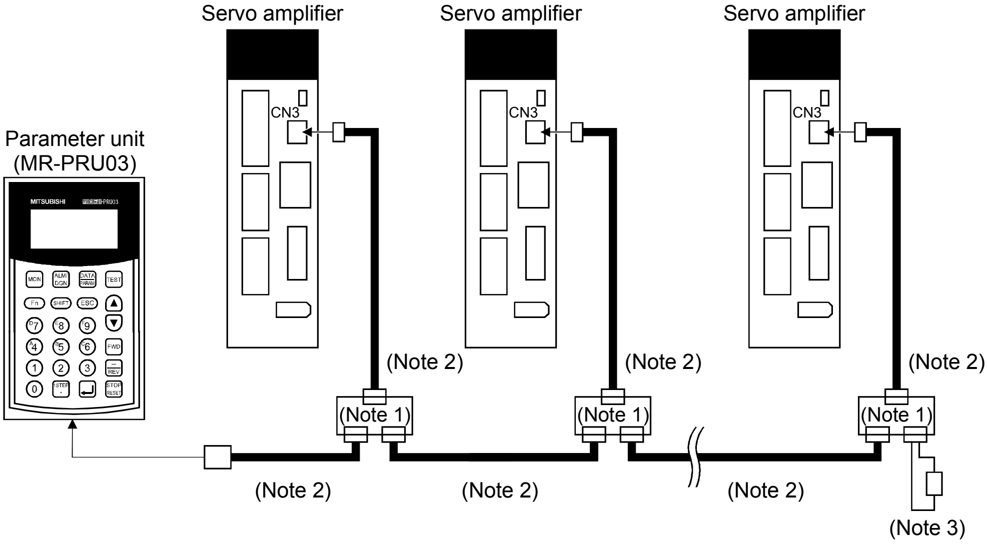

Note 1. The BMJ-8 (Hakko Electric Machine Works) is recommended as the branch connector.

2. Use the 10BASE-T cable (EIA568-compliant), etc.

3. The final axis must be terminated between RDP (pin No.3) and RDN (pin No.6) on the receiving side (servo amplifier) with a 150Ω resistor.

(2) Cable internal wiring diagram

Wire the cables as shown below.

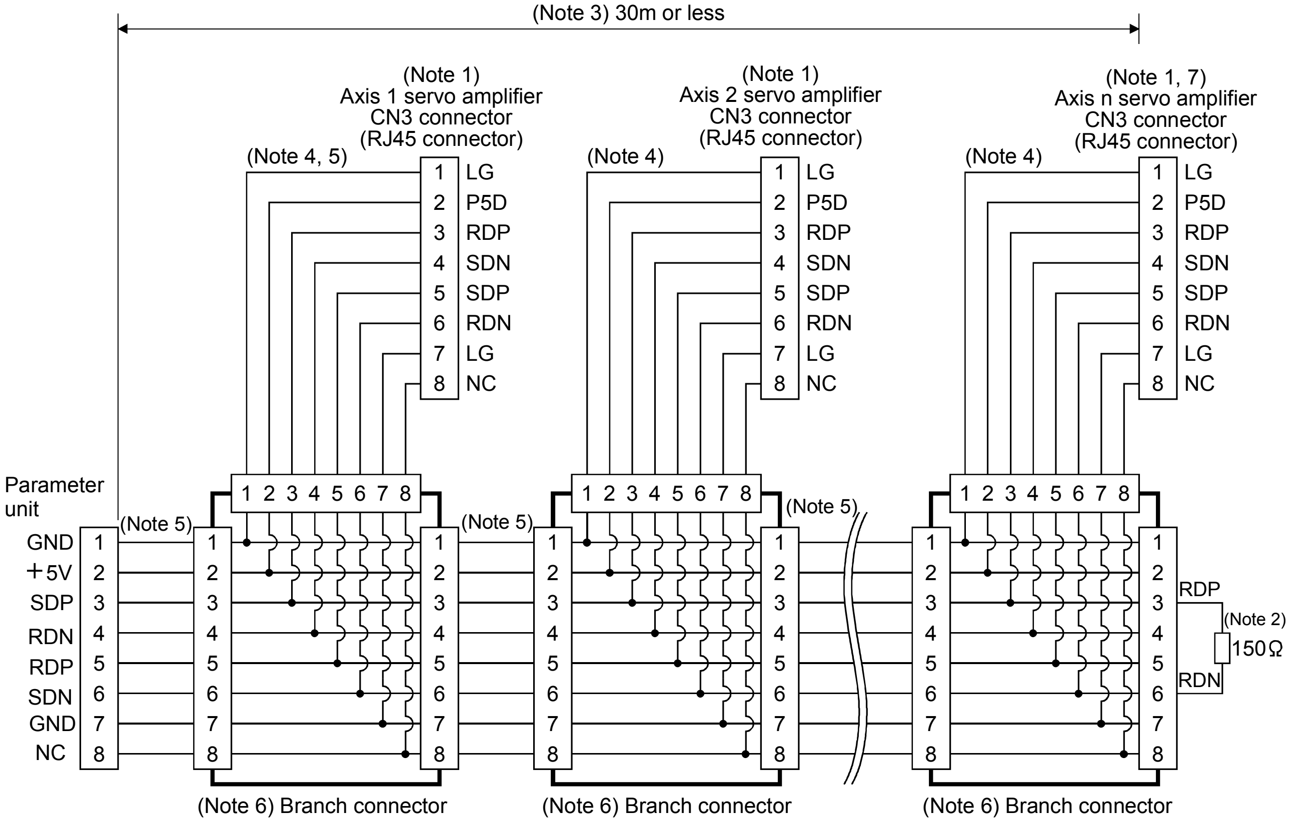

Note 1. Recommended connector (Hirose Electric)

Plug: TM10P-88P

Connection tool: CL250-0228-1

2. The final axis must be terminated between RDP (pin No.3) and RDN (pin No.6) on the receiving side (servo amplifier) with a 150Ω resistor.
3. The overall length is 30m or less in low-noise environment.
4. The wiring between the branch connector and servo amplifier should be as short as possible.
5. Use the EIA568-compliant cable (10BASE-T cable, etc.).
6. Recommended branch connector: BMJ-8 (Hakko Electric Machine Works)
7. n ≤ 32 (Up to 32 axes can be connected.)

8.5 Display

Connect the MR-PRU03 parameter unit to the servo amplifier, and turn ON the power of the servo amplifier. In this section, the screen transition of the MR-PRU03 parameter unit is explained, together with the operation procedure in each mode.

8.5.1 Outline of screen transition

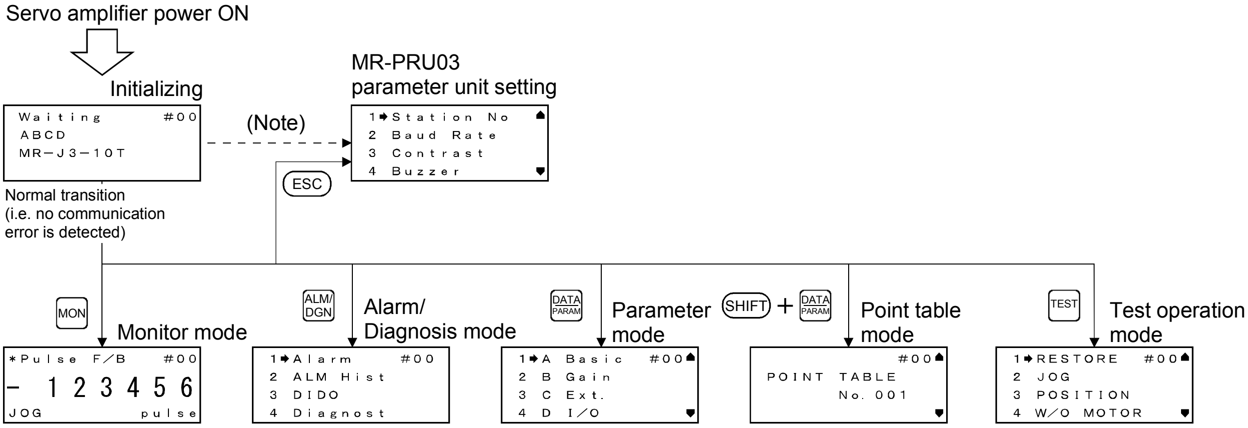

Note. If initialization communication fails, a communication error is displayed. Press the "ESC" key to return to the PRU setting screen.

8.5.2 MR-PRU03 parameter unit setting

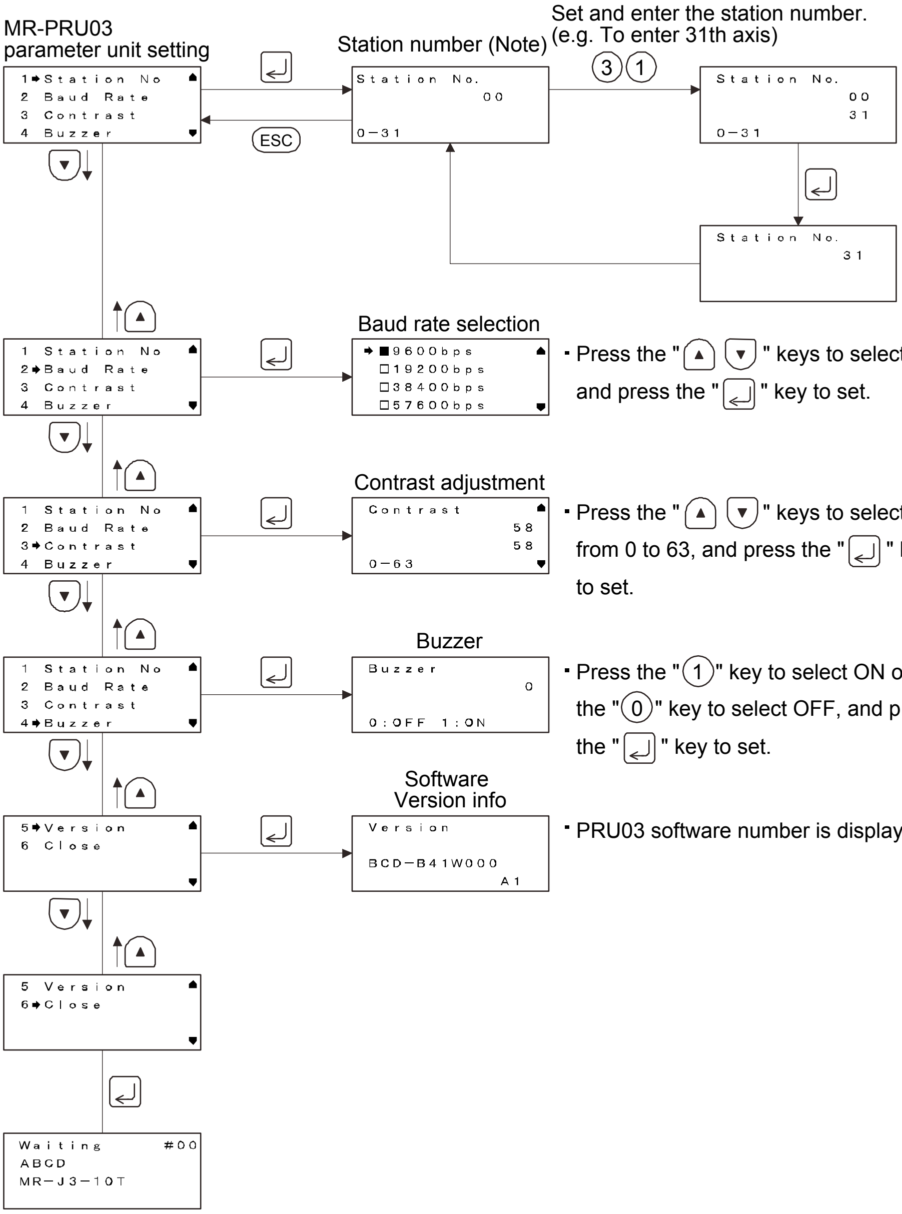

- Press the "▲ ▼" keys to select, and press the "↵" key to set.
- Press the "▲ ▼" keys to select from 0 to 63, and press the "↵" key to set.
- Press the "①" key to select ON or the "⓪" key to select OFF, and press the "↵" key to set.
- PRU03 software number is displayed.

Note. Press the "SHIFT" key and "ESC" key together on any screen to return to the station number setting screen.

8.5.3 Monitor mode (status display)

(1) Monitor display

The servo status during operation is shown on the display. Refer to (2) in this section for details.

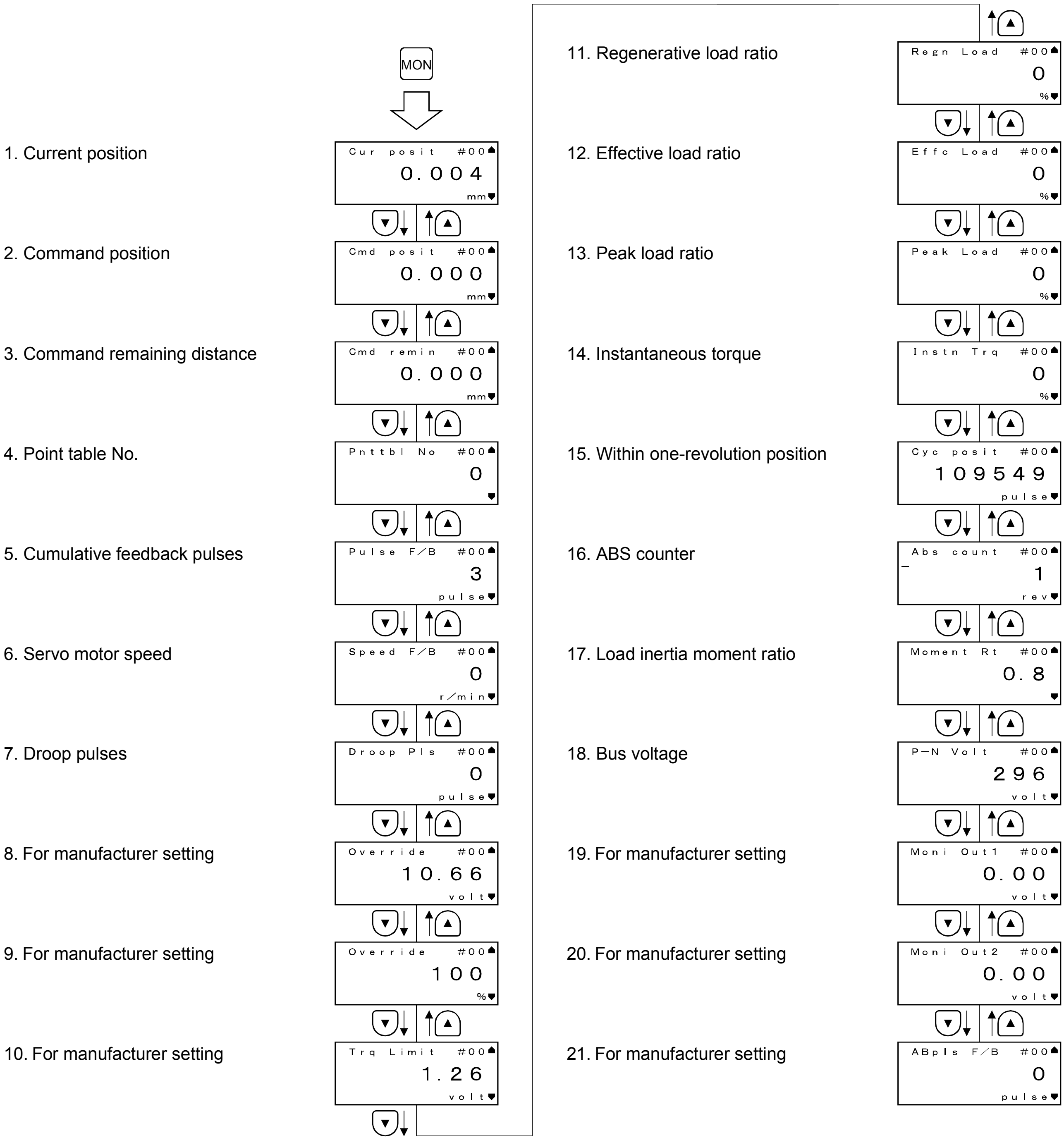

(2) Monitor display list

The following table lists the items and descriptions of monitor display.

Status display	Display on parameter unit	Unit	Description	Display range
Current position	Cur posit	$\times 10^{STM}$ mm	The current position from the machine home position of 0 is displayed.	−9999999 to 9999999
Command position	Cmd Posit	$\times 10^{STM}$ mm	The command position is displayed.	−9999999 to 9999999
Command remaining distance	Cmd remin	$\times 10^{STM}$ mm	The command remaining distance of the currently selected point table is displayed.	−999999999 to 999999999
Point table No.	Pnttbl No		The point table No. being executed is displayed.	0 to 255
Cumulative feedback pulses	Pulse F/B	pulse	Feedback pulses from the servo motor encoder are counted and displayed. When the value exceeds ±999999, characters are displayed smaller. Press the "RESET" key of the parameter unit to reset the display value to zero.	−999999999 to 999999999
Servo motor speed	Speed F/B	r/min	The servo motor speed is displayed. "-" is added to the speed of the servo motor rotating in the reverse rotation. The value rounded off is displayed in ×0.1r/min.	−7200 to 7200
Droop pulse	Droop Pls	pulse	The number of droop pulses in the deviation counter is displayed. "- " is added to the reverse pulses. When the value exceeds ±999999, characters are displayed smaller. The number of pulses displayed is in the encoder pulse unit.	−999999999 to 999999999
Regenerative load ratio	Regn Load	%	The ratio of regenerative power to permissible regenerative power is displayed in %. When regenerative option is used, the ratio to the permissible regenerative power is displayed.	0 to 100
Effective load ratio	Effc Load	%	The continuous effective load current is displayed. The effective value is displayed relative to the rated current of 100%.	0 to 300
Peak load ratio	Peak Load	%	The maximum torque is displayed. The highest value in the past 15 seconds is displayed relative to the rated torque of 100%.	0 to 400
Instantaneous torque	Instn Trq	%	Torque that occurred instantaneously is displayed. The value of the torque that occurred is displayed in real time relative to the rate torque of 100%.	0 to 400
Within one-revolution position	Cyc posit	pulse	Position within one revolution is displayed in encoder pulses. The value returns to 0 when it exceeds the maximum number of pulses. The value is incremented in the CCW direction of rotation.	0 to 262143
ABS counter	Abs count	rev	Travel value from the home position in the absolute position detection systems is displayed in terms of the absolute position detectors counter value.	−32768 to 32767
Load inertia moment ratio	Moment Rt	Multiplier (×1)	The estimated ratio of the load inertia moment to the servo motor shaft inertia moment is displayed.	0.0 to 300.0
Bus voltage	P-N Volt	V	The voltage (across P-N or P+ - N−) of the main circuit converter is displayed.	0 to 900

8.5.4 Alarm/diagnostic mode

(1) Alarm display

The flowchart below shows the procedure of settings involving alarms, alarm history, external I/O signal (DIDO) display, device and diagnosis.

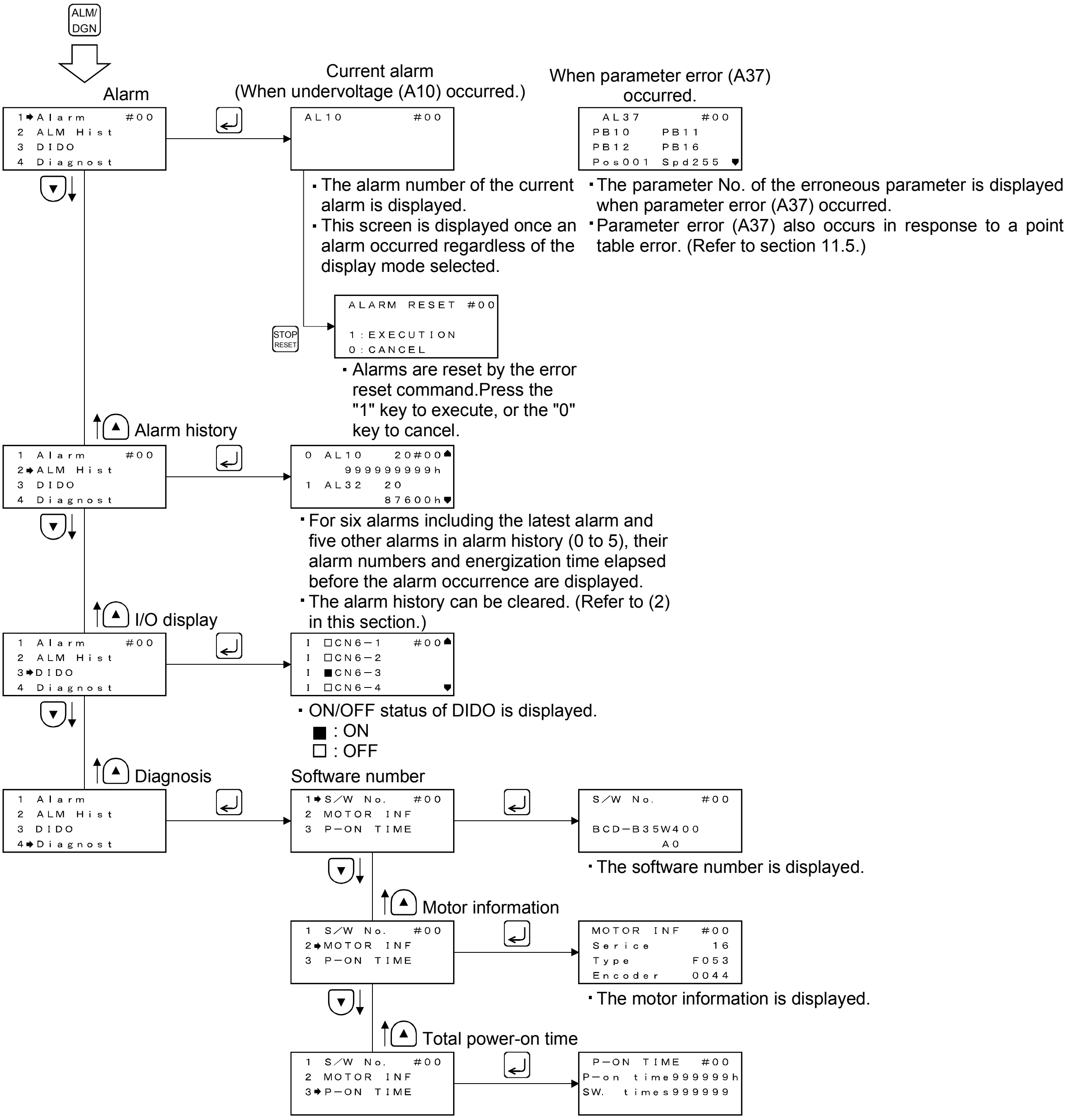

- The alarm number of the current alarm is displayed.
- This screen is displayed once an alarm occurred regardless of the display mode selected.

- The parameter No. of the erroneous parameter is displayed when parameter error (A37) occurred.
- Parameter error (A37) also occurs in response to a point table error. (Refer to section 11.5.)

- Alarms are reset by the error reset command.Press the "1" key to execute, or the "0" key to cancel.

- For six alarms including the latest alarm and five other alarms in alarm history (0 to 5), their alarm numbers and energization time elapsed before the alarm occurrence are displayed.
- The alarm history can be cleared. (Refer to (2) in this section.)

- ON/OFF status of DIDO is displayed.
  ■ : ON
  ☐ : OFF

- The software number is displayed.

- The motor information is displayed.

- The total power-on time (P-on) and the number of power-on times (SW.) since shipped are displayed.

(2) Alarm history clear

The servo amplifier stores last six alarms from when its power is switched on first. To control alarms which will occur during operation, clear the alarm history before starting operation.

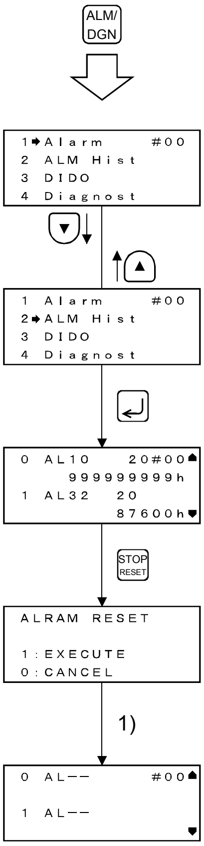

- Select "ALM Hist".
- For six alarms including the latest alarm and five other alarms in alarm history (0 to 5), their alarm numbers and energization time elapsed before the alarm occurrence are displayed.
- The alarm history clear menu is displayed.
- Select "1" to clear the alarm history.

8.5.5 Parameter mode

The flowchart below shows the procedure for setting parameters.

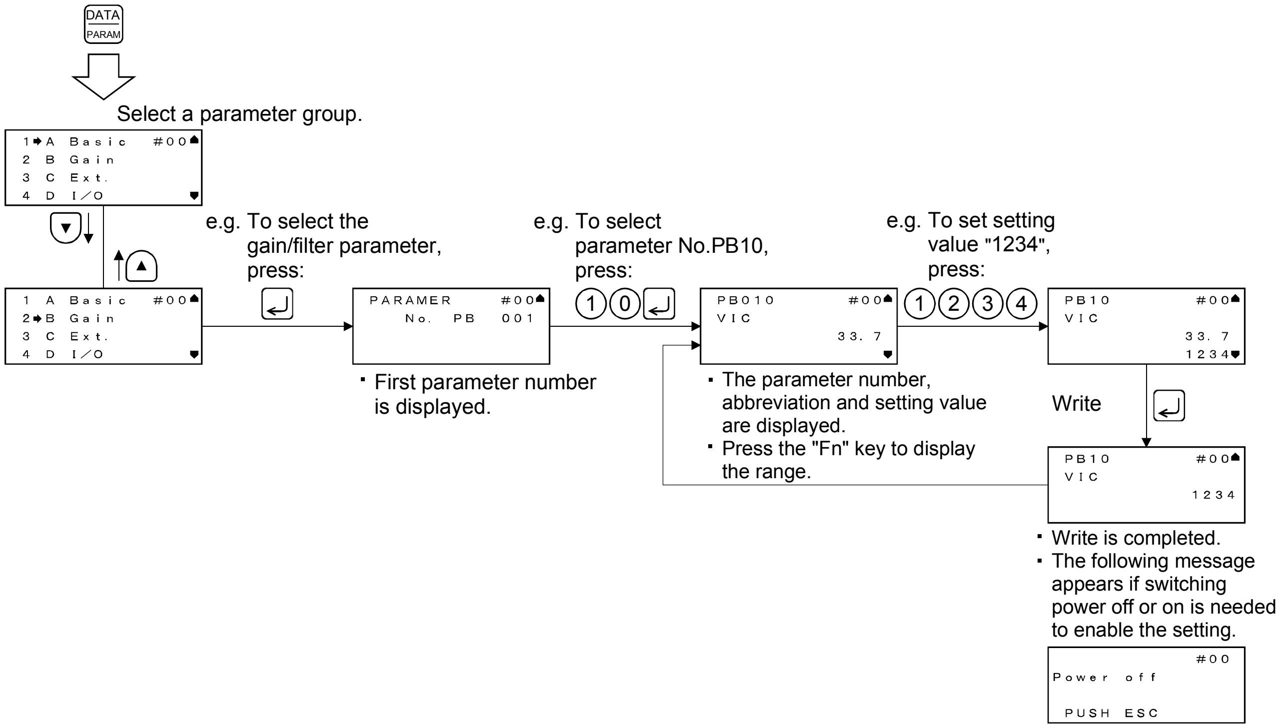

Select a parameter group.

e.g. To select the gain/filter parameter, press:

e.g. To select parameter No.PB10, press:

e.g. To set setting value "1234", press:

- First parameter number is displayed.
- The parameter number, abbreviation and setting value are displayed.
- Press the "Fn" key to display the range.

Write

- Write is completed.
- The following message appears if switching power off or on is needed to enable the setting.

8.5.6 Point table mode

The flowchart below shows the procedure for setting point table data.

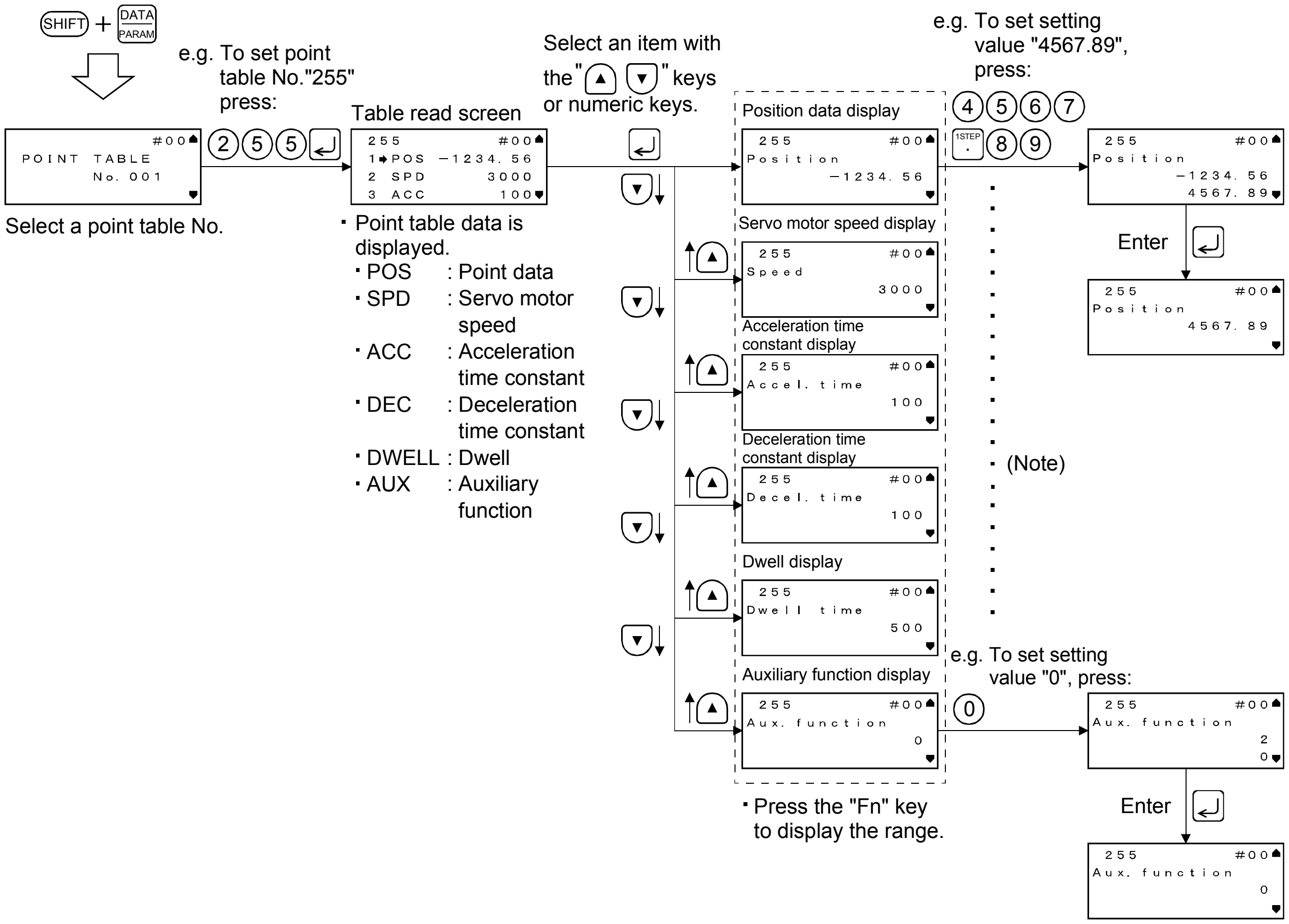

Note. This applies to all types of data.

8.5.7 Test operation mode

⚠ CAUTION

- When confirming the machine operation in the test operation mode, use the machine after checking that the safety mechanism such as the forced stop (EMG) operates.
- If any operational fault has occurred, stop operation using the forced stop (EMG).

POINT

- Test operation cannot be executed without turning the servo OFF.
- Single-step feed operation cannot be used in indexer positioning operation and speed control operation.

Exiting test/JOG operation/positioning operation/motor-less operation/DO forced stop/single-step feed can be performed in this mode. The following shows how to set each operation.
When the servo motor equipped with an electromagnetic brake is used, make sure to program a sequence circuit which will operate the electromagnetic brake by the servo amplifier electromagnetic brake interlock (MBR).

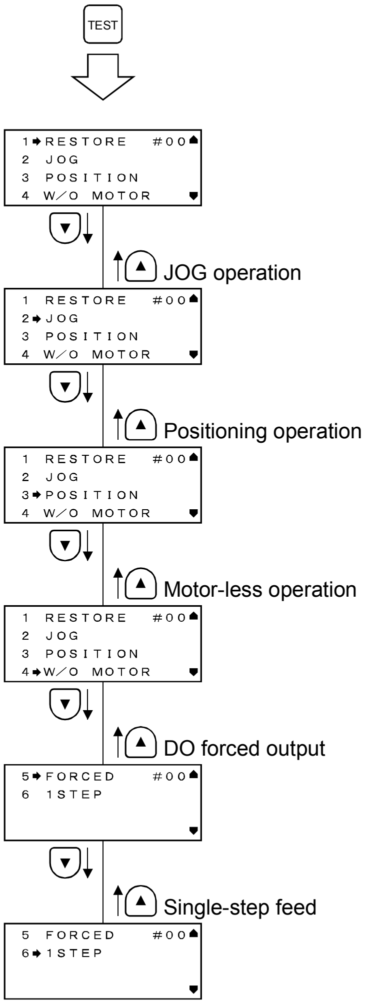

(1) Jog operation

Jog operation can be performed when there is no command from the controller.

Connect EMG-DOCOM to start jog operation.

(a) Operation/cancel

You can change the operation conditions with the parameter unit. The initial conditions and setting ranges for operation are listed below.

Item	Initial setting	Setting range
Speed [r/min]	200	0 to instantaneous permissible speed
(Note) Acceleration/deceleration time constant [ms]	1000	0 to 20000

Note. Acceleration time constant refers to time required to reach the rated speed from stop status (0r/min), and deceleration time constant refers to time required to reach 0r/min from the rated speed.

The following shows the operation condition settings and the operation procedures.

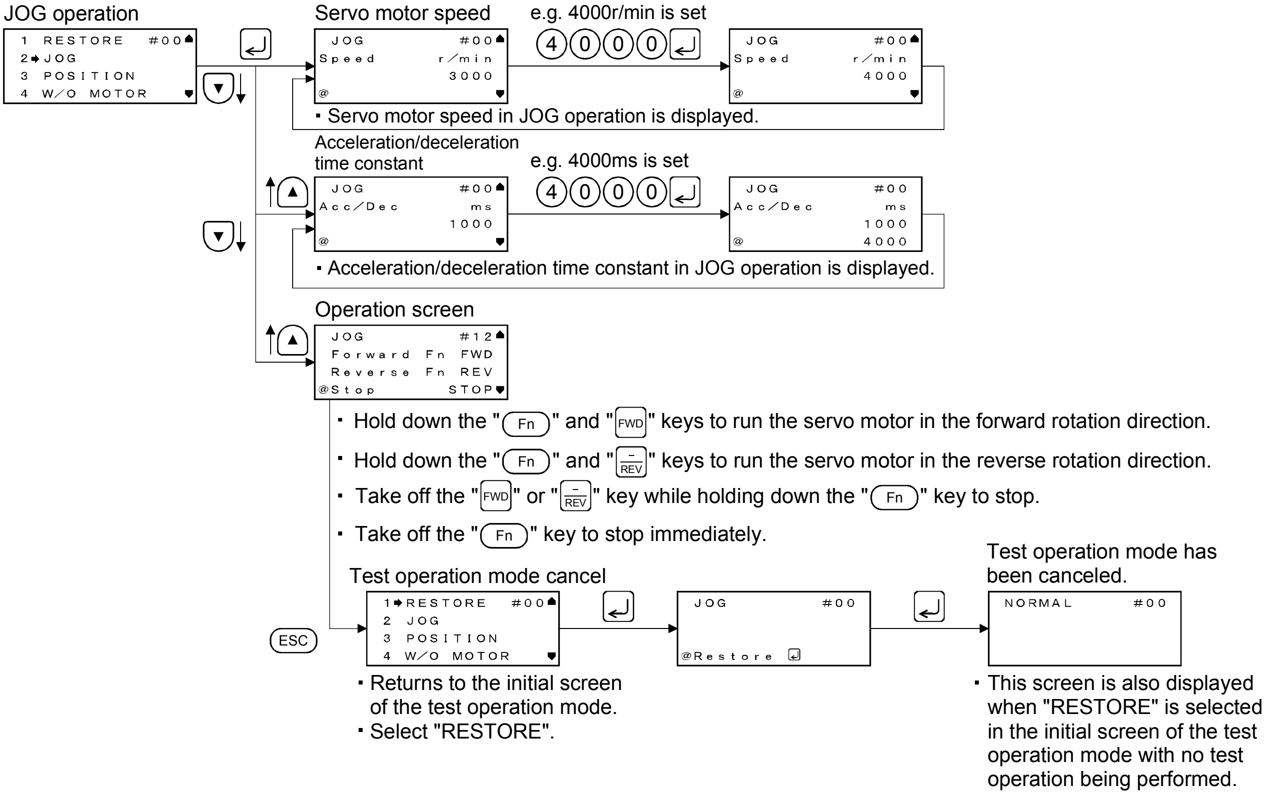

- Servo motor speed in JOG operation is displayed.
- Acceleration/deceleration time constant in JOG operation is displayed.
- Hold down the "Fn" and "FWD" keys to run the servo motor in the forward rotation direction.
- Hold down the "Fn" and "REV" keys to run the servo motor in the reverse rotation direction.
- Take off the "FWD" or "REV" key while holding down the "Fn" key to stop.
- Take off the "Fn" key to stop immediately.
- Returns to the initial screen of the test operation mode.
- Select "RESTORE".
- This screen is also displayed when "RESTORE" is selected in the initial screen of the test operation mode with no test operation being performed.

If the parameter unit cable is disconnected during jog operation, the servo motor will be decelerated to a stop.

To switch from the test operation mode to the CC-Link operation mode, turn OFF the power of the servo amplifier.

(b) Status display

You can monitor the status display even during JOG operation. At this time, the "FWD", "REV" and "STOP" keys can be used.

(2) Positioning operation

Positioning operation can be performed once when there is no command from the controller.

Connect EMG-DOCOM to start positioning operation.

(a) Operation/cancel

You can change the operation conditions with the parameter unit. The initial conditions and setting ranges for operation are listed below.

Item	Initial setting	Setting range
Speed [r/min]	200	0 to instantaneous permissible speed
(Note 2) Acceleration/deceleration time constant [ms]	1000	0 to 20000
(Note 1) Travel distance [pulse]	4000	0 to 99999999

Note 1. The unit of move distance can be changed using feed length multiplication factor selection of parameter No.PA05.

2. Acceleration time constant refers to time required to reach the rated speed from stop status (0r/min), and deceleration time constant refers to time required to reach 0r/min from the rated speed.

The following shows the operation condition settings and the operation procedures.

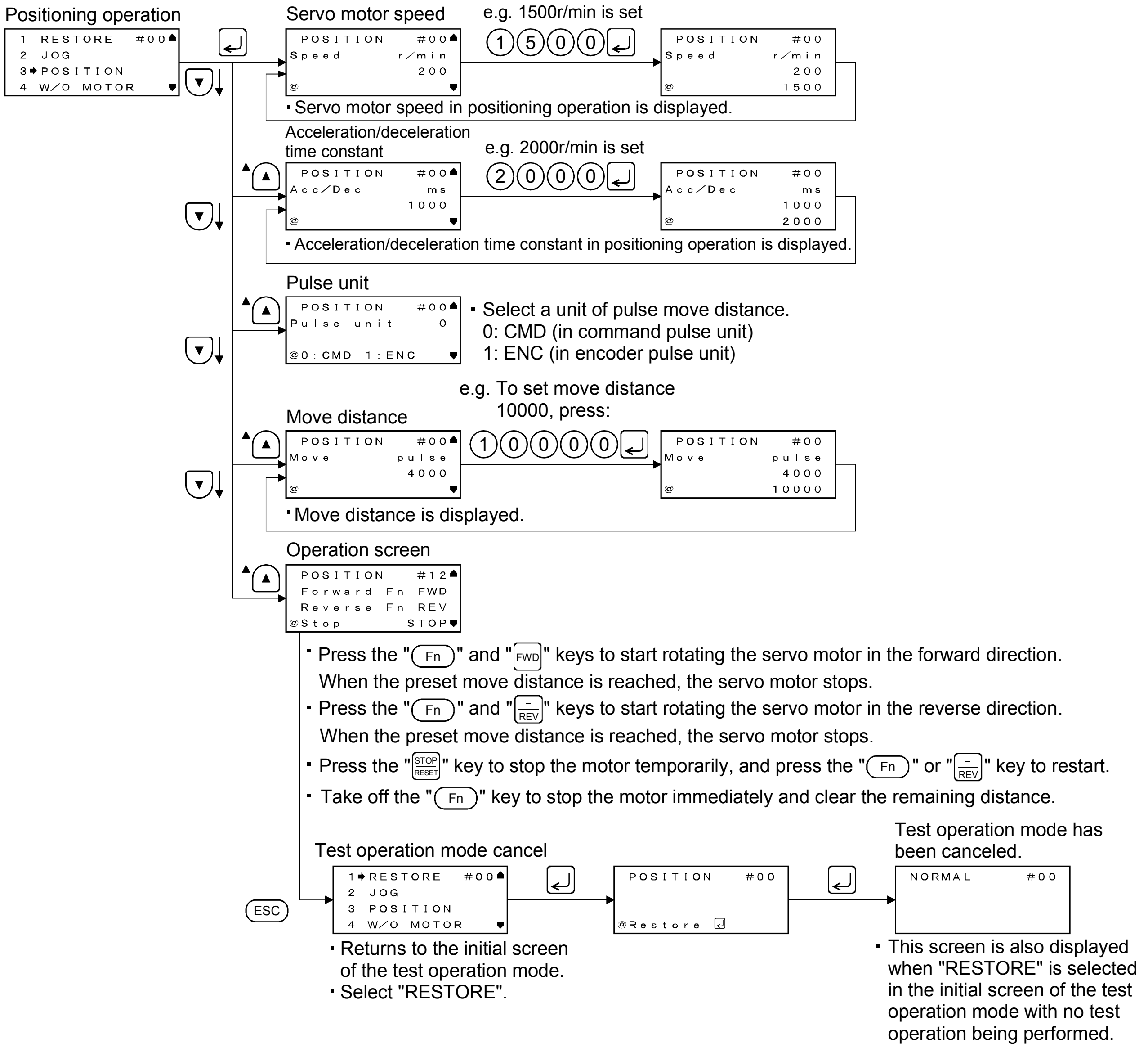

- Servo motor speed in positioning operation is displayed.
- Acceleration/deceleration time constant in positioning operation is displayed.
- Select a unit of pulse move distance.
  0: CMD (in command pulse unit)
  1: ENC (in encoder pulse unit)
- Move distance is displayed.
- Press the "Fn" and "FWD" keys to start rotating the servo motor in the forward direction. When the preset move distance is reached, the servo motor stops.
- Press the "Fn" and "REV" keys to start rotating the servo motor in the reverse direction. When the preset move distance is reached, the servo motor stops.
- Press the "STOP RESET" key to stop the motor temporarily, and press the "Fn" or "REV" key to restart.
- Take off the "Fn" key to stop the motor immediately and clear the remaining distance.
- Returns to the initial screen of the test operation mode.
- Select "RESTORE".
- This screen is also displayed when "RESTORE" is selected in the initial screen of the test operation mode with no test operation being performed.

If the communication cable is disconnected during positioning operation, the servo motor will come to a sudden stop.

(b) Status display

You can monitor the status display even during positioning operation. At this time, the "FWD", "REV" and "STOP" keys can be used.

(3) Motor-less operation

Without connecting the servo motor, you can provide output signals or monitor the status display as if the servo motor is running in response to external input devices. This operation can be used to check the sequence of a sequencer or the like.

(a) Operation/cancel

After turning off the SON signal, choose motor-less operation. After that, perform external operation as in ordinary operation.

The following shows the operation procedures.

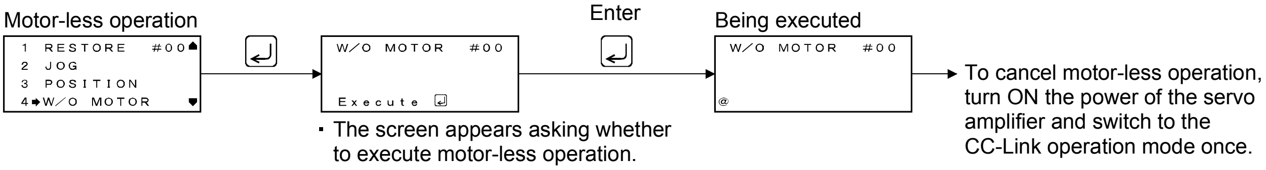

- The screen appears asking whether to execute motor-less operation.

To cancel motor-less operation, turn ON the power of the servo amplifier and switch to the CC-Link operation mode once.

(b) Status display

You can monitor the status display even during motor-less operation.

(4) DO forced output

Each output signal can be forced on/off independently of the servo status. This function is used for the servo wiring check, etc.

Connect EMG-DOCOM to start DO forced output.

The following shows the operation procedures.

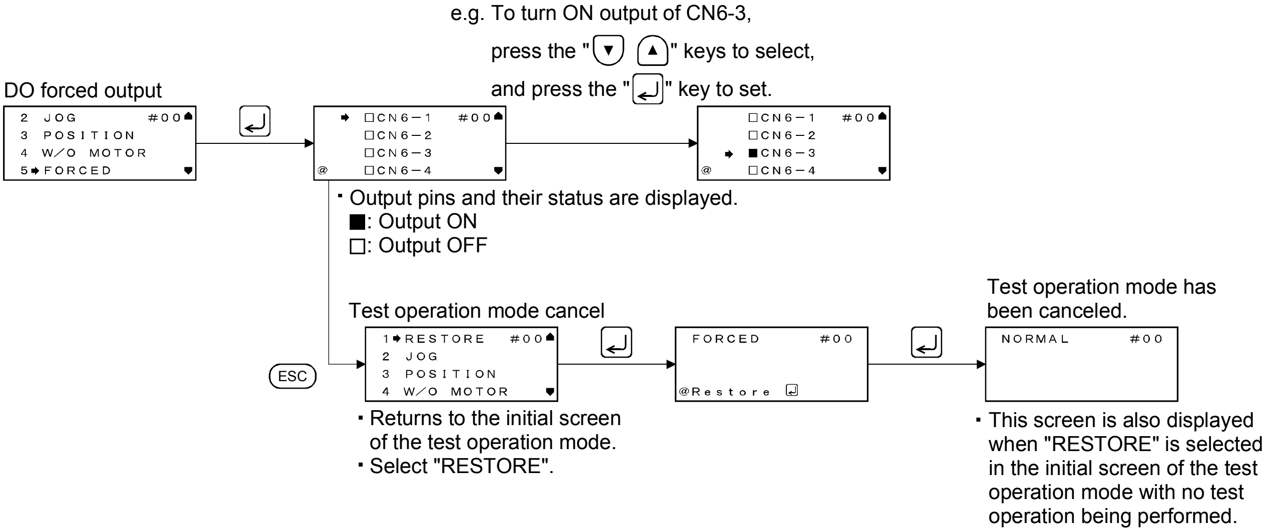

e.g. To turn ON output of CN6-3, press the "▼ ▲" keys to select, and press the "↵" key to set.

- Output pins and their status are displayed.
  ■: Output ON
  □: Output OFF

- Returns to the initial screen of the test operation mode.
- Select "RESTORE".

- This screen is also displayed when "RESTORE" is selected in the initial screen of the test operation mode with no test operation being performed.

(5) Single-step feed

Operation is performed in accordance with the preset point table No.

Connect EMG-DOCOM to start single-step feed.

The following shows the operation condition settings and the operation procedures.

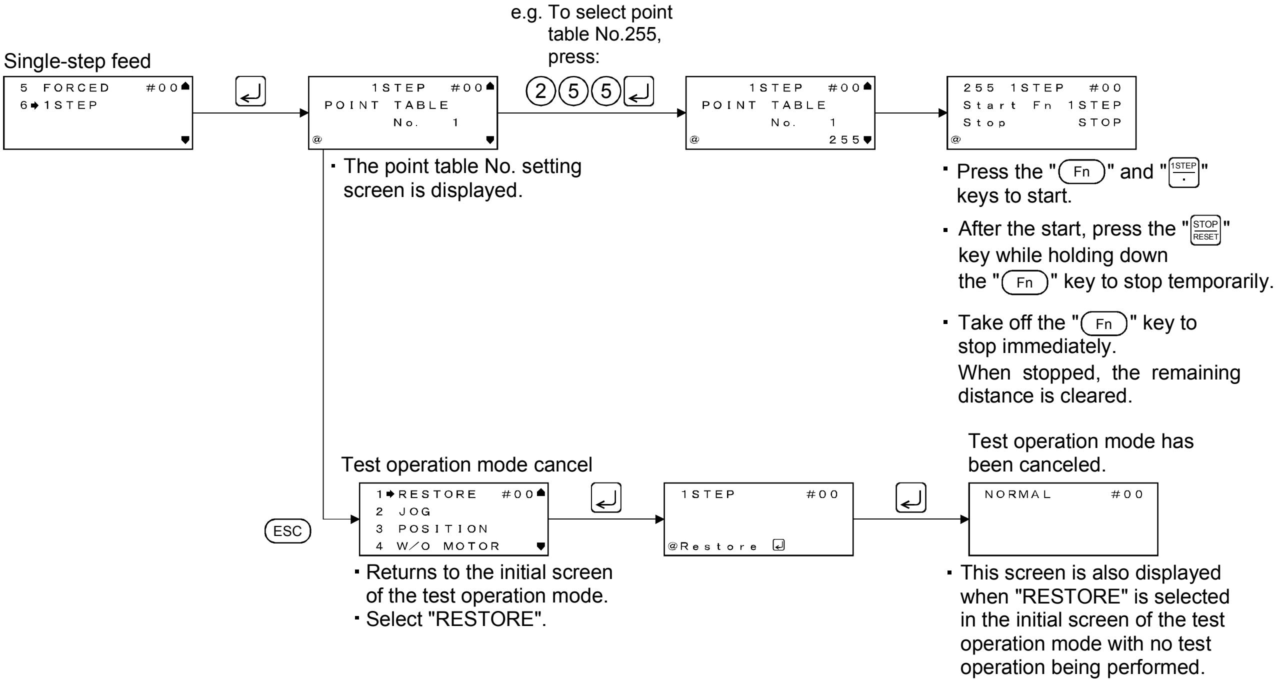

- The point table No. setting screen is displayed.
- Press the "Fn" and "1STEP" keys to start.
- After the start, press the "STOP RESET" key while holding down the "Fn" key to stop temporarily.
- Take off the "Fn" key to stop immediately. When stopped, the remaining distance is cleared.
- Returns to the initial screen of the test operation mode.
- Select "RESTORE".
- This screen is also displayed when "RESTORE" is selected in the initial screen of the test operation mode with no test operation being performed.

8.6 Error message list

When using the MR-PRU03 parameter unit, the following error messages may be displayed. When displayed, refer to this section to remove cause.

(1) Error messages

Error detail	Message	Cause
Communication error	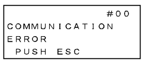 #00 COMMUNICATION ERROR PUSH ESC	1. Hardware reason 2. Mismatch in station number 3. Mismatch in baud rate
Setting error	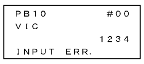 PB10 #00 VIC 1234 INPUT ERR.	Incorrect input, etc.
Write error	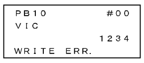 PB10 #00 VIC 1234 WRITE ERR.	Value is written while write is disabled.
EEP-ROM write error	 #00 EEPROM ERR. PUSH ESC	1. Parts in the MR-PRU03 parameter unit are faulty. 2. EEP-ROM built in the MR-PRU03 parameter unit has been overwritten more than 100000 times.

(2) Messages

Message	Description
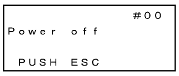 #00 Power off PUSH ESC	Valid parameters were written when power is off.
 #00 DO NOT CHANGE STATION NO PUSH ESC	The MR-PRU03 parameter unit was used to set a station number and perform transition during the test operation mode.
 #00 SET TEST DRIVE DIFFER PUSH ESC	Operation mode is the test operation mode.
 #00 TEST MODE CHANGED PUSH ESC	The test mode was changed due to external factor.
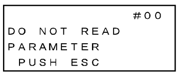 #00 DO NOT READ PARAMETER PUSH ESC	Reading settings specified for the parameter write disable (parameter No.PA19) was attempted.
 TEST DRIVE ON PUSH ESC	In the test operation, the "ESC" key was pressed while the "Fn" key was held down to switch the screen to the MR-PRU03 parameter unit setting screen.
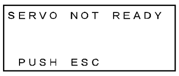 SERVO NOT READY PUSH ESC	The ready cannot be turned ON due to alarm, etc.
 #12 SON ON PUSH ESC	Operation mode can be switched to the test operation mode at servo-on.
 #12 DO NOT CHANGE STATION NO PUSH ESC	Station number change was attempted in the test operation mode.
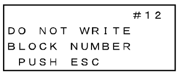 #12 DO NOT WRITE BLOCK NUMBER PUSH ESC	Point table No. change was attempted in the single-step feed operation.

9. GENERAL GAIN ADJUSTMENT

POINT

- Before making gain adjustment, check that your machine is not being operated at maximum torque of the servo motor. If operated over maximum torque, the machine may vibrate and may operate unexpectedly. Make gain adjustment with a safety margin considering characteristic differences of each machine. It is recommended that generated torque during operation is under 90% of the maximum torque of the servo motor.

9.1 Different adjustment methods

9.1.1 Adjustment on a single servo amplifier

The gain adjustment in this section can be made on a single servo amplifier. For gain adjustment, first execute auto tuning mode 1. If you are not satisfied with the results, execute auto tuning mode 2 and manual mode in this order.

(1) Gain adjustment mode explanation

Gain adjustment mode	Parameter No. PA08 setting	Estimation of load inertia moment ratio	Automatically set parameters	Manually set parameters
Auto tuning mode 1 (initial value)	0001	Always estimated	GD2 (parameter No.PB06) PG2 (parameter No.PB08) PG1 (parameter No.PB07) VG2 (parameter No.PB09) VIC (parameter No.PB10)	RSP (parameter No.PA09)
Auto tuning mode 2	0002	Fixed to parameter No. PB06 value	PG2 (parameter No.PB08) PG1 (parameter No.PB07) VG2 (parameter No.PB09) VIC (parameter No.PB10)	GD2 (parameter No.PB06) RSP (parameter No.PA09)
Manual mode	0003			PG1 (parameter No.PB07) GD2 (parameter No.PB06) VG2 (parameter No.PB09) VIC (parameter No.PB10)
Interpolation mode	0000	Always estimated	GD2 (parameter No.PB06) PG2 (parameter No.PB08) VG2 (parameter No.PB09) VIC (parameter No.PB10)	PG1 (parameter No.PB07) RSP (Parameter No.PA09)

(2) Adjustment sequence and mode usage

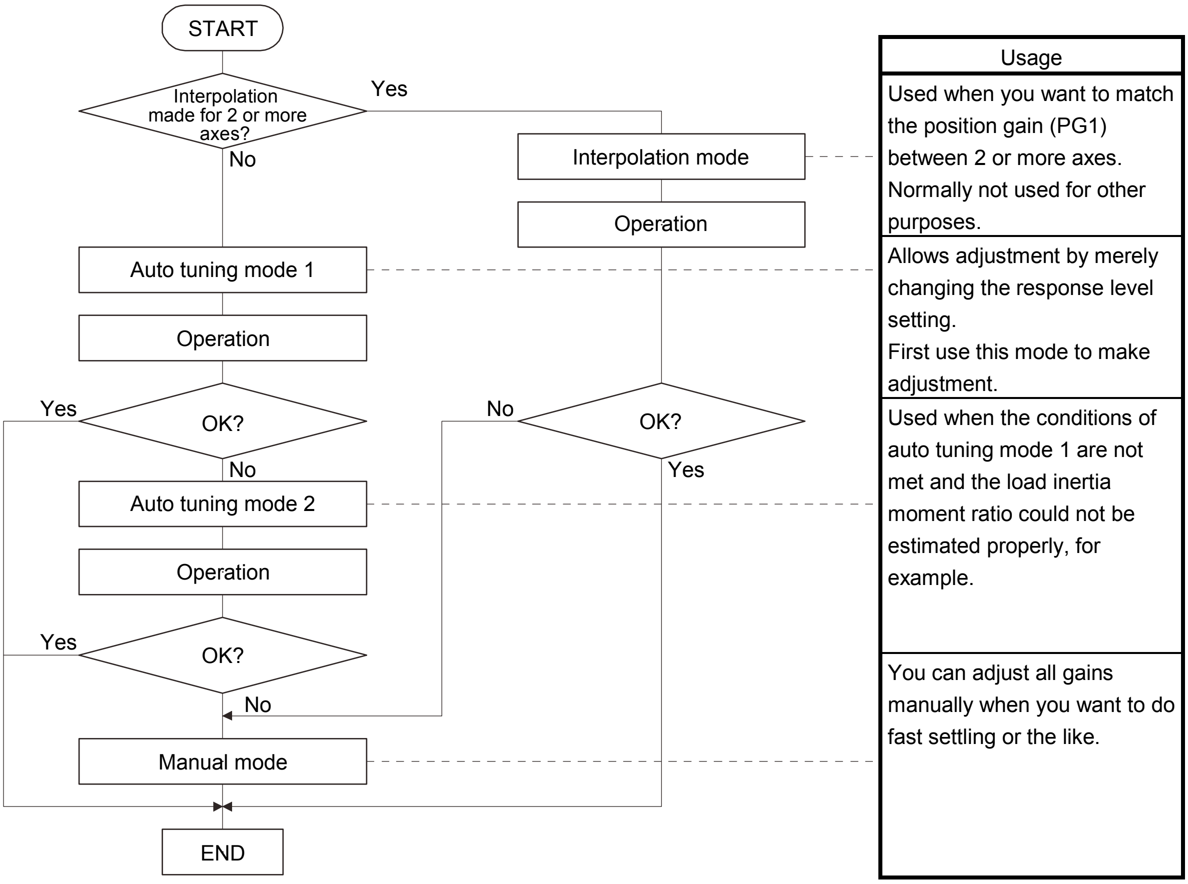

Usage
Used when you want to match the position gain (PG1) between 2 or more axes. Normally not used for other purposes.
Allows adjustment by merely changing the response level setting. First use this mode to make adjustment.
Used when the conditions of auto tuning mode 1 are not met and the load inertia moment ratio could not be estimated properly, for example.
You can adjust all gains manually when you want to do fast settling or the like.

9.1.2 Adjustment using MR Configurator

This section gives the functions and adjustment that may be performed by using the servo amplifier with the MR Configurator which operates on a personal computer.

Function	Description	Adjustment
Machine analyzer	With the machine and servo motor coupled, the characteristic of the mechanical system can be measured by giving a random vibration command from the personal computer to the servo and measuring the machine response.	・You can grasp the machine resonance frequency and determine the notch frequency of the machine resonance suppression filter. ・You can automatically set the optimum gains in response to the machine characteristic. This simple adjustment is suitable for a machine which has large machine resonance and does not require much settling time.
Gain search	Executing gain search under to-and-fro positioning command measures settling characteristic while simultaneously changing gains, and automatically searches for gains which make settling time shortest.	・You can automatically set gains which make positioning settling time shortest.
Machine simulation	Response at positioning settling of a machine can be simulated from machine analyzer results on personal computer.	・You can optimize gain adjustment and command pattern on personal computer.

9.2 Auto tuning

9.2.1 Auto tuning mode

The servo amplifier has a real-time auto tuning function which estimates the machine characteristic (load inertia moment ratio) in real time and automatically sets the optimum gains according to that value. This function permits ease of gain adjustment of the servo amplifier.

(1) Auto tuning mode 1

The servo amplifier is factory-set to the auto tuning mode 1.
In this mode, the load inertia moment ratio of a machine is always estimated to set the optimum gains automatically.
The following parameters are automatically adjusted in the auto tuning mode 1.

Parameter No.	Abbreviation	Name
PB06	GD2	Ratio of load inertia moment to servo motor inertia moment
PB07	PG1	Model loop gain
PB08	PG2	Position loop gain
PB09	VG2	Speed loop gain
PB10	VIC	Speed integral compensation

POINT

- The auto tuning mode 1 may not be performed properly if the following conditions are not satisfied.
- Time to reach 2000r/min is the acceleration/deceleration time constant of 5s or less.
- Speed is 150r/min or higher.
- The ratio of load inertia moment to servo motor inertia moment is 100 times or less.
- The acceleration/deceleration torque is 10% or more of the rated torque.
- Under operating conditions which will impose sudden disturbance torque during acceleration/deceleration or on a machine which is extremely loose, auto tuning may not function properly, either. In such cases, use the auto tuning mode 2 or manual mode to make gain adjustment.

(2) Auto tuning mode 2

Use the auto tuning mode 2 when proper gain adjustment cannot be made by auto tuning mode 1. Since the load inertia moment ratio is not estimated in this mode, set the value of a correct load inertia moment ratio (parameter No.PB06).
The following parameters are automatically adjusted in the auto tuning mode 2.

Parameter No.	Abbreviation	Name
PB07	PG1	Model loop gain
PB08	PG2	Position loop gain
PB09	VG2	Speed loop gain
PB10	VIC	Speed integral compensation

9.2.2 Auto tuning mode basis

The block diagram of real-time auto tuning is shown below.

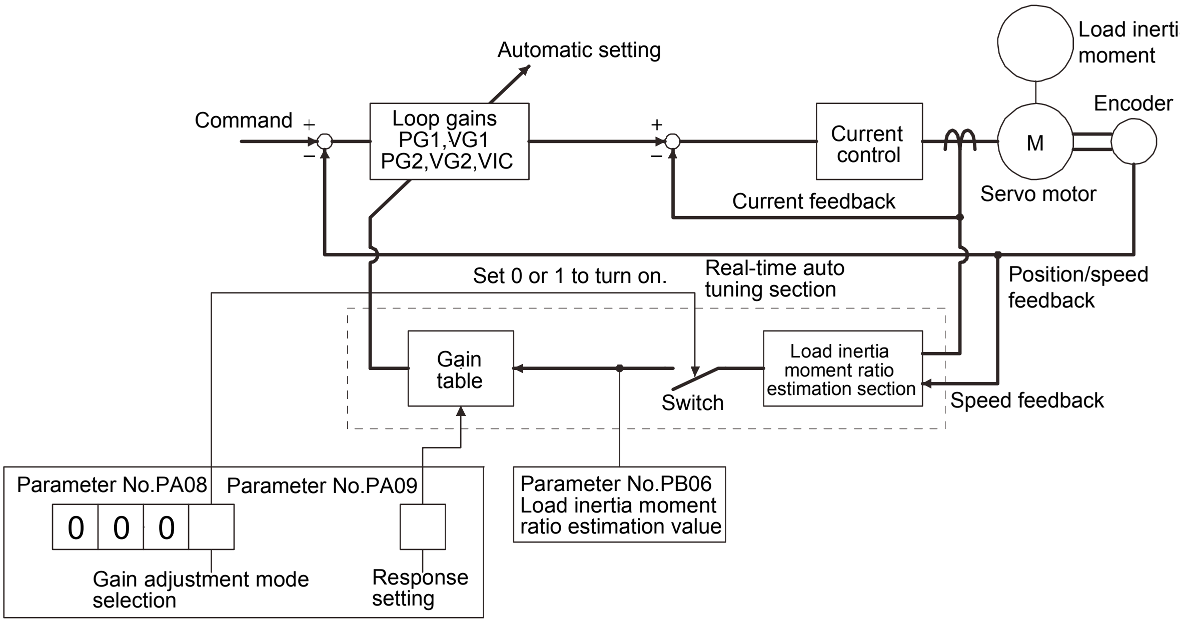

When a servo motor is accelerated/decelerated, the load inertia moment ratio estimation section always estimates the load inertia moment ratio from the current and speed of the servo motor. The results of estimation are written to parameter No.PB06 (the ratio of load inertia moment to servo motor). These results can be confirmed on the status display screen of the MR Configurator section.
If the value of the load inertia moment ratio is already known or if estimation cannot be made properly, set the "auto tuning mode 2" (parameter No.PA08: 0002) to stop the estimation of the load inertia moment ratio (Switch in above diagram turns off), and set the load inertia moment ratio (parameter No.PB06) manually.
From the preset load inertia moment ratio (parameter No.PB06) value and response level (parameter No.PA09), the optimum loop gains are automatically set on the basis of the internal gain table.
The auto tuning results are saved in the EEP-ROM of the servo amplifier every 60 minutes since power-on. At power-on, auto tuning is performed with the value of each loop gain saved in the EEP-ROM being used as an initial value.

POINT

- If sudden disturbance torque is imposed during operation, the estimation of the inertia moment ratio may malfunction temporarily. In such a case, choose the "auto tuning mode 2" (parameter No.PA08: 0002) and set the correct load inertia moment ratio in parameter No.PB06.
- When any of the auto tuning mode 1 and auto tuning mode settings is changed to the manual mode 2 setting, the current loop gains and load inertia moment ratio estimation value are saved in the EEP-ROM.

9.2.3 Adjustment procedure by auto tuning

Since auto tuning is made valid before shipment from the factory, simply running the servo motor automatically sets the optimum gains that match the machine. Merely changing the response level setting value as required completes the adjustment. The adjustment procedure is as follows.

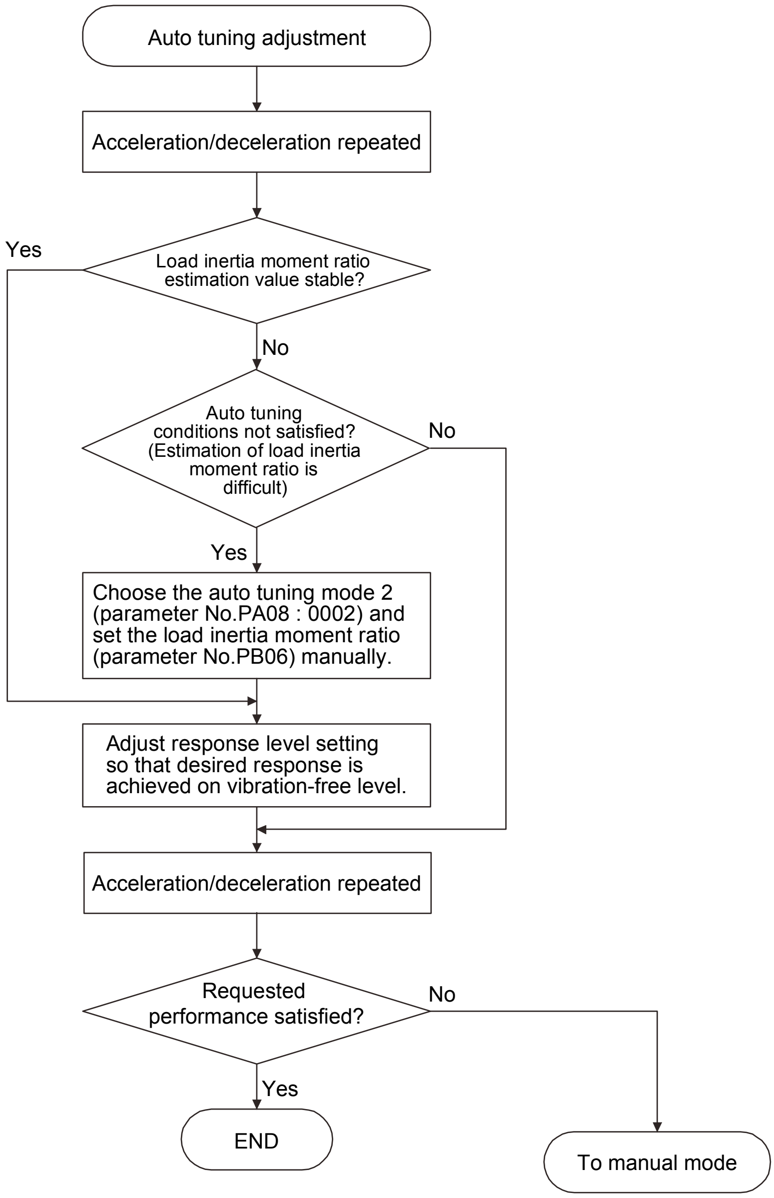

9.2.4 Response level setting in auto tuning mode

Set the response (The first digit of parameter No.PA09) of the whole servo system. As the response level setting is increased, the track ability and settling time for a command decreases, but a too high response level will generate vibration. Hence, make setting until desired response is obtained within the vibration-free range.
If the response level setting cannot be increased up to the desired response because of machine resonance beyond 100Hz, adaptive tuning mode (parameter No.PB01) or machine resonance suppression filter (parameter No.PB13 to PB16) may be used to suppress machine resonance. Suppressing machine resonance may allow the response level setting to increase. Refer to section 10.2 and 10.3 for adaptive tuning mode and machine resonance suppression filter.

Setting of parameter No.PA09

Response level setting	Machine characteristic		
	Machine rigidity	Machine resonance frequency guideline	Guideline of corresponding machine
1	Low	10.0	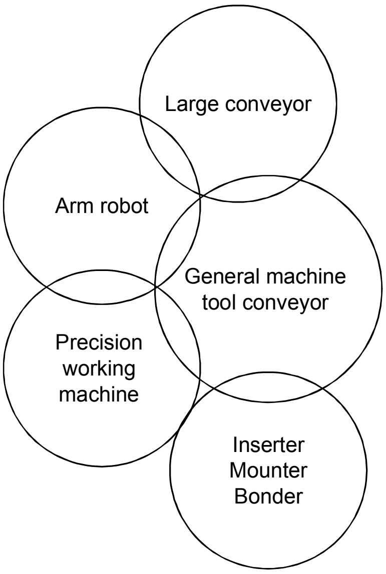
2		11.3	
3		12.7	
4		14.3	
5		16.1	
6		18.1	
7		20.4	
8		23.0	
9		25.9	
10		29.2	
11		32.9	
12		37.0	
13		41.7	
14		47.0	
15		52.9	
16	Middle	59.6	
17		67.1	
18		75.6	
19		85.2	
20		95.9	
21		108.0	
22		121.7	
23		137.1	
24		154.4	
25		173.9	
26		195.9	
27		220.6	
28		248.5	
29		279.9	
30		315.3	
31		355.1	
32	High	400.0	

9.3 Manual mode 1 (simple manual adjustment)

If you are not satisfied with the adjustment of auto tuning, you can make simple manual adjustment with three parameters.

POINT

- If machine resonance occurs, adaptive tuning mode (parameter No.PB01) or machine resonance suppression filter (parameter No.PB13 to PB16) may be used to suppress machine resonance. (Refer to section 10.1.)

(1) For speed control

(a) Parameters

The following parameters are used for gain adjustment.

Parameter No.	Abbreviation	Name
PB06	GD2	Ratio of load inertia moment to servo motor inertia moment
PB07	PG1	Model loop gain
PB09	VG2	Speed loop gain
PB10	VIC	Speed integral compensation

(b) Adjustment procedure

Step	Operation	Description
1	Brief-adjust with auto tuning. Refer to section 9.2.3.	
2	Change the setting of auto tuning to the manual mode (Parameter No.PA08: 0003).	
3	Set an estimated value to the ratio of load inertia moment to servo motor inertia moment. (If the estimate value with auto tuning is correct, setting change is not required.)	
4	Set a slightly smaller value to the model loop gain Set a slightly larger value to the speed integral compensation.	
5	Increase the speed loop gain within the vibration- and unusual noise-free range, and return slightly if vibration takes place.	Increase the speed loop gain.
6	Decrease the speed integral compensation within the vibration-free range, and return slightly if vibration takes place.	Decrease the time constant of the speed integral compensation.
7	Increase the model loop gain, and return slightly if overshooting takes place.	Increase the model loop gain.
8	If the gains cannot be increased due to mechanical system resonance or the like and the desired response cannot be achieved, response may be increased by suppressing resonance with adaptive tuning mode or machine resonance suppression filter and then executing steps 3 to 7.	Suppression of machine resonance. Refer to section 10.2, 10.3.
9	While checking the settling characteristic and rotational status, fine-adjust each gain.	Fine adjustment

(c) Adjustment description

1) Speed loop gain (parameter No.PB09)

This parameter determines the response level of the speed control loop. Increasing this value enhances response but a too high value will make the mechanical system liable to vibrate. The actual response frequency of the speed loop is as indicated in the following expression.

$$\text{Speed loop response frequency(Hz)} = \frac{\text{Speed loop gain setting}}{(1+\text{ratio of load inertia moment to servo motor inertia moment}) \times 2\pi}$$

2) Speed integral compensation (VIC: parameter No.PB10)

To eliminate stationary deviation against a command, the speed control loop is under proportional integral control. For the speed integral compensation, set the time constant of this integral control. Increasing the setting lowers the response level. However, if the load inertia moment ratio is large or the mechanical system has any vibratory element, the mechanical system is liable to vibrate unless the setting is increased to some degree. The guideline is as indicated in the following expression.

$$\text{Speed integral compensation setting(ms)} \geq \frac{\text{2000 to 3000}}{\text{Speed loop gain setting/(1 + setting ratio of load inertia moment to servo motor inertia moment setting} \times \text{0.1)}}$$

3) Model loop gain (PG1: Parameter No.PB07)

This parameter determines the response level to a position command. Increasing the model loop gain improves track ability to a position command, but a too high value will make overshooting liable to occur at the time of setting.

$$\text{Model loop gain guideline} \leq \frac{\text{Speed loop gain setting}}{(1+\text{ratio of load inertia moment to servo mortar inertia moment})} \times \left(\frac{1}{4} \text{ to } \frac{1}{8}\right)$$

(2) For position control

(a) Parameters

The following parameters are used for gain adjustment.

Parameter No.	Abbreviation	Name
PB06	GD2	Ratio of load inertia moment to servo motor inertia moment
PB07	PG1	Model loop gain
PB08	PG2	Position loop gain
PB09	VG2	Speed loop gain
PB10	VIC	Speed integral compensation

(b) Adjustment procedure

Step	Operation	Description
1	Brief-adjust with auto tuning. Refer to section 9.2.3.	
2	Change the setting of auto tuning to the manual mode (Parameter No.PA08: 0003).	
3	Set an estimated value to the ratio of load inertia moment to servo motor inertia moment. (If the estimate value with auto tuning is correct, setting change is not required.)	
4	Set a slightly smaller value to the model loop gain and the position loop gain. Set a slightly larger value to the speed integral compensation.	
5	Increase the speed loop gain within the vibration- and unusual noise-free range, and return slightly if vibration takes place.	Increase the speed loop gain.
6	Decrease the speed integral compensation within the vibration-free range, and return slightly if vibration takes place.	Decrease the time constant of the speed integral compensation.
7	Increase the position loop gain, and return slightly if vibration takes place.	Increase the position loop gain.
8	Increase the model loop gain, and return slightly if overshooting takes place.	Increase the position loop gain.
9	If the gains cannot be increased due to mechanical system resonance or the like and the desired response cannot be achieved, response may be increased by suppressing resonance with adaptive tuning mode or machine resonance suppression filter and then executing steps 3 to 8.	Suppression of machine resonance. Refer to section 10.2 · 10.3.
10	While checking the settling characteristic and rotational status, fine-adjust each gain.	Fine adjustment.

(c) Adjustment description

1) Speed loop gain (VG2: parameter No.PB09)

This parameter determines the response level of the speed control loop. Increasing this value enhances response but a too high value will make the mechanical system liable to vibrate. The actual response frequency of the speed loop is as indicated in the following expression.

$$\text{Speed loop response frequency(Hz)} = \frac{\text{Speed loop gain setting}}{(1 + \text{ratio of load inertia moment to servo motor inertia moment}) \times 2\pi}$$

2) Speed integral compensation (VIC: parameter No.PB10)

To eliminate stationary deviation against a command, the speed control loop is under proportional integral control. For the speed integral compensation, set the time constant of this integral control. Increasing the setting lowers the response level. However, if the load inertia moment ratio is large or the mechanical system has any vibratory element, the mechanical system is liable to vibrate unless the setting is increased to some degree. The guideline is as indicated in the following expression.

$$\text{Speed integral compensation setting(ms)} \geq \frac{\text{2000 to 3000}}{\text{Speed loop gain setting/(1 + setting ratio of load inertia moment to servo motor inertia moment)}}$$

3) Position loop gain (PG2: Parameter No.PB08)

This parameter determines the response level to the disturbance of position control loop. Increasing the position loop gain enhances response level to a disturbance, but a too high value will make the mechanical system liable to vibrate.

$$\text{Model control gain guideline} \leq \frac{\text{Speed loop gain setting}}{(1 + \text{ratio of load inertia moment to servo motor inertia moment})} \times \left(\frac{1}{4} \text{ to } \frac{1}{8}\right)$$

4) Model loop gain (PG1: parameter No.PB07)

This parameter determines the response level to a position command. Increasing model loop gain improves track ability to a position command but a too high value will make overshooting liable to occur at the time of settling.

$$\text{Model loop gain guideline} \leq \frac{\text{Speed loop gain setting}}{(1 + \text{ratio of load inertia moment to servo motor inertia moment})} \times \left(\frac{1}{4} \text{ to } \frac{1}{8}\right)$$

9.4 Interpolation mode

The interpolation mode is used to match the position loop gains of the axes when performing the interpolation operation of servo motors of two or more axes for an X-Y table or the like. In this mode, manually set the model loop gain that determines command track ability. Other parameters for gain adjustment are set automatically.

(1) Parameter

(a) Automatically adjusted parameters

The following parameters are automatically adjusted by auto tuning.

Parameter No.	Abbreviation	Name
PB06	GD2	Ratio of load inertia moment to servo motor inertia moment
PB08	PG2	Position loop gain
PB09	VG2	Speed loop gain
PB10	VIC	Speed integral compensation

(b) Manually adjusted parameters

The following parameters are adjustable manually.

Parameter No.	Abbreviation	Name
PB07	PG1	Model loop gain

(2) Adjustment procedure

Step	Operation	Description
1	Set to the auto tuning mode.	Select the auto tuning mode 1.
2	During operation, increase the response level setting (parameter No.PA09), and return the setting if vibration occurs.	Adjustment in auto tuning mode 1.
3	Check the values of model loop gain.	Check the upper setting limits.
4	Set the interpolation mode (parameter No.PA08: 0000).	Select the interpolation mode.
5	Set the model loop gain of all the axes to be interpolated to the same value. At that time, adjust to the setting value of the axis, which has the smallest model loop gain.	Set position loop gain.
6	Looking at the interpolation characteristic and rotation status, fine-adjust the gains and response level setting.	Fine adjustment.

(3) Adjustment description

(a) Model loop gain (parameter No.PB07)

This parameter determines the response level of the position control loop. Increasing model loop gain improves track ability to a position command but a too high value will make overshooting liable to occur at the time of settling. The droop pulse value is determined by the following expression.

$$\text{Droop pulse value (pulse)} = \frac{\dfrac{\text{Rotation speed (r/min)}}{60} \times 262144\text{(pulse)}}{\text{Model loop gain setting}}$$

9.5 Differences between MELSERVO-J2-Super and MELSERVO-J3 in auto tuning

To meet higher response demands, the MELSERVO-J3 series has been changed in response level setting range from the MR-J2-Super. The following table lists comparison of the response level setting.

MELSERVO-J2-Super		MELSERVO-J3	
Parameter No.3 setting	Guideline for machine resonance frequency [Hz]	Parameter No.PA09 setting	Guideline for machine resonance frequency [Hz]
		1	10.0
		2	11.3
		3	12.7
□□□1	15	4	14.3
		5	16.1
		6	18.1
□□□2	20	7	20.4
		8	23.0
□□□3	25	9	25.9
□□□4	30	10	29.2
		11	32.9
□□□5	35	12	37.0
		13	41.7
□□□6	45	14	47.0
□□□7	55	15	52.9
		16	59.6
□□□8	70	17	67.1
		18	75.6
□□□9	85	19	85.2
		20	95.9
□□□A	105	21	108.0
		22	121.7
□□□B	130	23	137.1
□□□C	160	24	154.4
		25	173.9
□□□D	200	26	195.9
		27	220.6
□□□E	240	28	248.5
		29	279.9
□□□F	300	30	315.3
		31	355.1
		32	400.0

Note that because of a slight difference in gain adjustment pattern, response may not be the same if the resonance frequency is set to the same value.

10. SPECIAL ADJUSTMENT FUNCTIONS

POINT

- The functions given in this chapter need not be used generally. Use them if you are not satisfied with the machine status after making adjustment in the methods in chapter 9.

If a mechanical system has a natural resonance point, increasing the servo system response level may cause the mechanical system to produce resonance (vibration or unusual noise) at that resonance frequency.
Using the machine resonance suppression filter and adaptive tuning can suppress the resonance of the mechanical system.

10.1 Function block diagram

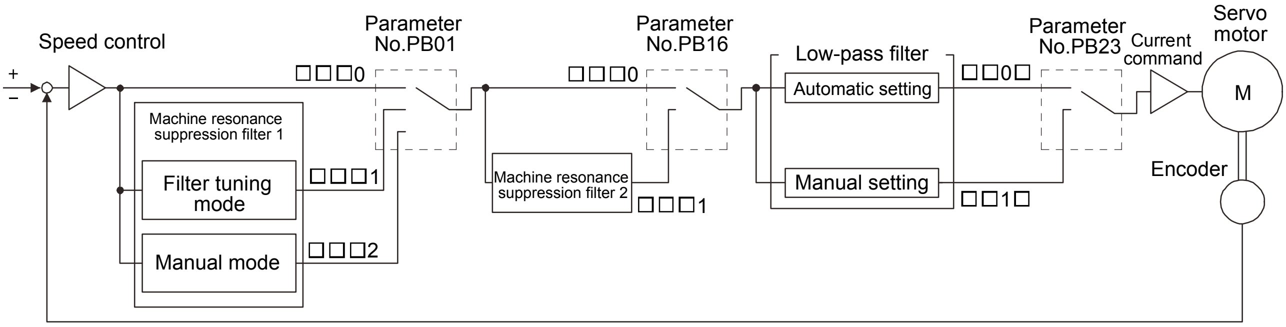

10.2 Adaptive filter Ⅱ

(1) Function

Adaptive filter Ⅱ (adaptive tuning) is a function in which the servo amplifier detects machine vibration for a predetermined period of time and sets the filter characteristics automatically to suppress mechanical system vibration. Since the filter characteristics (frequency, depth) are set automatically, you need not be conscious of the resonance frequency of a mechanical system.

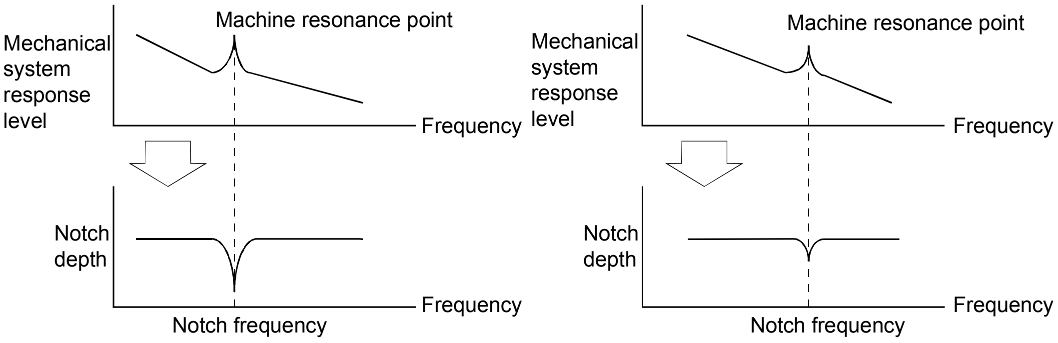

When machine resonance is large and frequency is low   When machine resonance is small and frequency is high

POINT

- The machine resonance frequency which adaptive filter II (adaptive tuning) can respond to is about 100 to 2.25kHz. Adaptive vibration suppression control has no effect on the resonance frequency outside this range.
- Adaptive vibration suppression control may provide no effect on a mechanical system which has complex resonance characteristics.

(2) Parameters

Select the tuning mode of adaptive tuning mode (parameter No.PB01).

Parameter No.PB01

0 0 0 ☐

Filter tuning mode selection

Setting	Adaptive tuning mode	Automatically set parameter
0	Filter OFF	(Note)
1	Filter tuning mode	Parameter No.PB13 Parameter No.PB14
2	Manual mode	

Note. Parameter No.PB19 and PB20 are fixed to the initial values.

(3) Adaptive tuning procedure

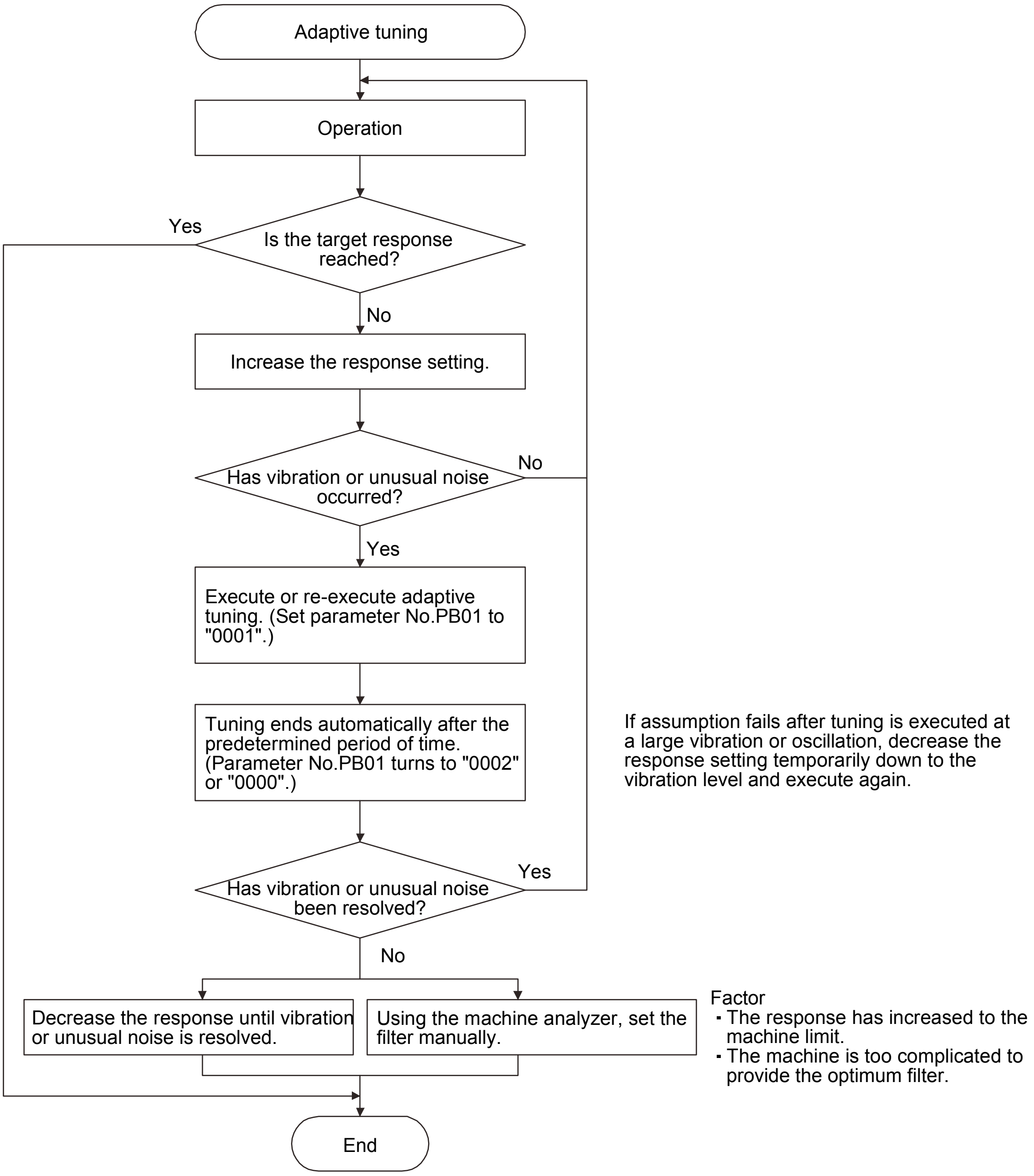

If assumption fails after tuning is executed at a large vibration or oscillation, decrease the response setting temporarily down to the vibration level and execute again.

Factor
- The response has increased to the machine limit.
- The machine is too complicated to provide the optimum filter.

POINT

- "Filter OFF" enables a return to the initial value.
- When adaptive tuning is executed, vibration sound increases as an excitation signal is forcibly applied for several seconds.
- When adaptive tuning is executed, machine resonance is detected for a maximum of 10 seconds and a filter is generated. After filter generation, the adaptive tuning mode automatically shifts to the manual mode.
- Adaptive tuning generates the optimum filter with the currently set control gains. If vibration occurs when the response setting is increased, execute adaptive tuning again.
- During adaptive tuning, a filter having an optimal notch depth for the set control gain is generated. To allow a filter margin against machine resonance, increase the notch depth in the manual mode.

10.3 Machine resonance suppression filter

(1) Function

The machine resonance suppression filter is a filter function (notch filter) which decreases the gain of the specific frequency to suppress the resonance of the mechanical system. You can set the gain decreasing frequency (notch frequency), gain decreasing depth and width.

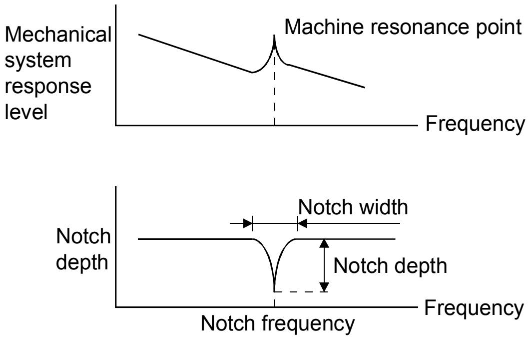

You can use the machine resonance suppression filter 1 (parameter No.PB13, PB14) and machine resonance suppression filter 2 (parameter No.PB15, PB16) to suppress the vibration of two resonance frequencies. Execution of adaptive tuning in the filter tuning mode automatically adjusts the machine resonance suppression filter. The filter tuning mode shifts to the manual mode after the predetermined period of time. The manual mode enables manual setting using the machine resonance suppression filter 1.

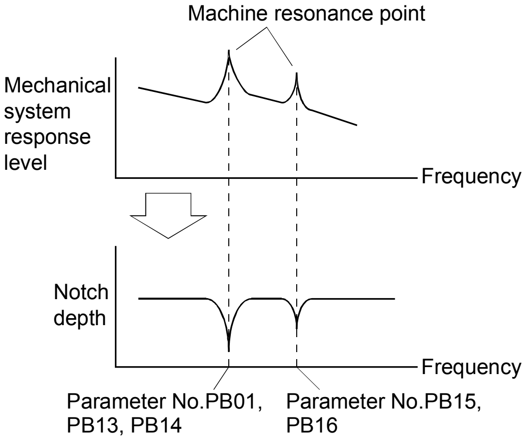

(2) Parameters

(a) Machine resonance suppression filter 1 (parameter No.PB13, PB14)

Set the notch frequency, notch depth and notch width of the machine resonance suppression filter 1 (parameter No.PB13, PB14)

When you have made adaptive tuning mode (parameter No.PB01) "manual mode", set up the machine resonance suppression filter 1 becomes effective.

(b) Machine resonance suppression filter (parameter No.PB15, PB16)

How to set the machine resonance suppression filter 2 (parameter No.PB15, PB16) is the same as for the machine resonance suppression filter 1 (parameter No.PB13, PB14). However, the machine resonance suppression filter 2 can be set regardless of setting values of adaptive tuning mode (parameter No.PB01)

POINT

- The machine resonance suppression filter is a delay factor for the servo system. Hence, vibration may increase if you set a wrong resonance frequency or a too deep notch.
- If the frequency of machine resonance is unknown, decrease the notch frequency from higher to lower ones in order. The optimum notch frequency is set at the point where vibration is minimal.
- A deeper notch has a higher effect on machine resonance suppression but increases a phase delay and may increase vibration.
- A deeper notch has a higher effect on machine resonance suppression but increases a phase delay and may increase vibration.
- The machine characteristic can be grasped beforehand by the machine analyzer on the MR Configurator. This allows the required notch frequency and depth to be determined.

10.4 Advanced vibration suppression control

(1) Operation

Vibration suppression control is used to further suppress machine side vibration, such as workpiece end vibration and base shake. The motor side operation is adjusted for positioning so that the machine does not shake.

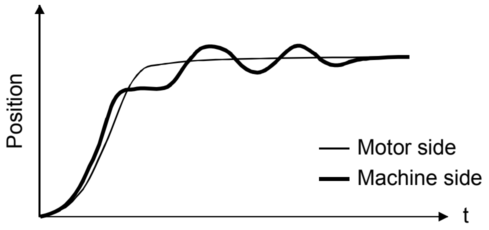

Vibration suppression control OFF
(Nomal control)

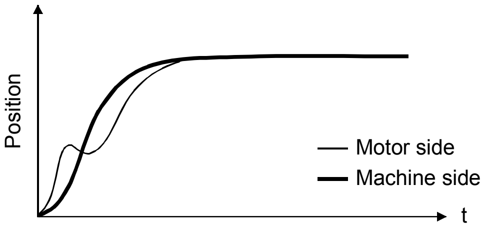

Vibration suppression control ON

When the advanced vibration suppression control (vibration suppression control tuning mode (parameter No.PB02) is executed, the vibration frequency at machine side can automatically be estimated to suppress machine side vibration.
In the vibration suppression control tuning mode, this mode shifts to the manual mode after positioning operation is performed the predetermined number of times. The manual mode enables manual setting using the vibration suppression control - vibration frequency setting (parameter No.PB19) and vibration suppression control - resonance frequency setting (parameter No.PB20).

(2) Parameter

Select the tuning mode of the vibration suppression control tuning mode (parameter No.PB02).

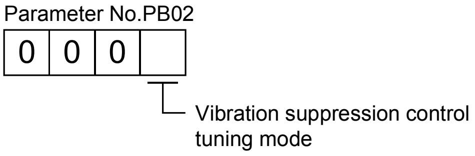

Setting	Vibration suppression control tuning mode	Automatically set parameter
0	Vibration suppression control OFF	(Note)
1	Vibration suppression control tuning mode (Advanced vibration suppression control)	Parameter No.PB19 Parameter No.PB20
2	Manual mode	

Note. Parameter No.PB19 and PB20 are fixed to the initial values.

POINT

- The function is made valid when the auto tuning mode (parameter No.PA08) is the auto tuning mode 2 ("0002") or manual mode ("0003").
- The machine resonance frequency supported in the vibration suppression control tuning mode is 1.0 to 100.0Hz. The function is not effective for vibration outside this range.
- Stop the motor before changing the vibration suppression control-related parameters (parameter No.PB02, PB19, PB20, PB33, PB34). A failure to do so will cause a shock.
- For positioning operation during execution of vibration suppression control tuning, provide a stop time to ensure a stop after full vibration damping.
- Vibration suppression control tuning may not make normal estimation if the residual vibration at the motor side is small.
- Vibration suppression control tuning sets the optimum parameter with the currently set control gains. When the response setting is increased, set vibration suppression control tuning again.

(3) Vibration suppression control tuning procedure

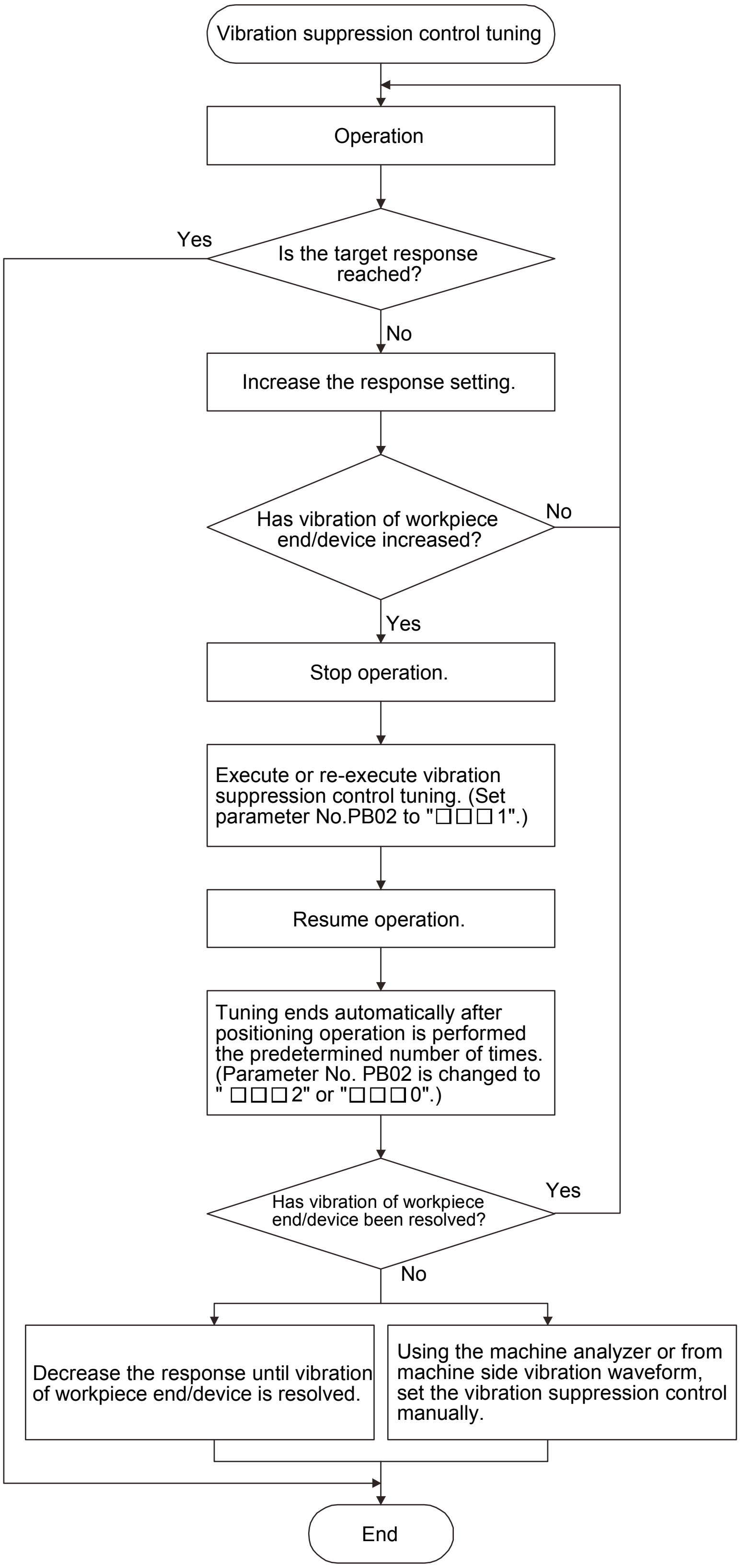

Factor
- Estimation cannot be made as machine side vibration has not been transmitted to the motor side.
- The response of the model loop gain has increased to the machine side vibration frequency (vibration suppression control limit).

(4) Vibration suppression control manual mode

Measure work side vibration and device shake with the machine analyzer or external measuring instrument, and set the vibration suppression control - vibration frequency (parameter No.PB19) and vibration suppression control - resonance frequency (parameter No.PB20) to set vibration suppression control manually.

(a) When a vibration peak can be confirmed by the machine analyzer on MR Configurator or external equipment

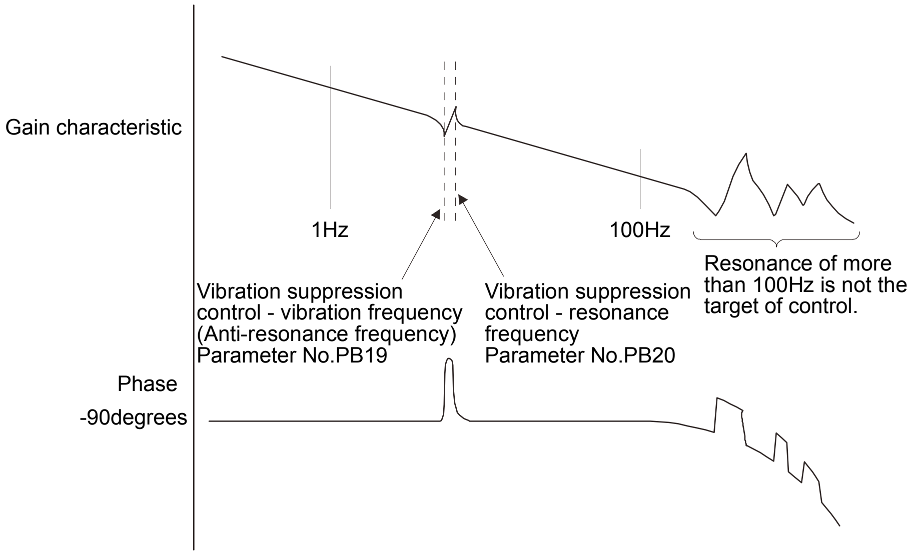

(b) When vibration can be confirmed using monitor signal or external sensor

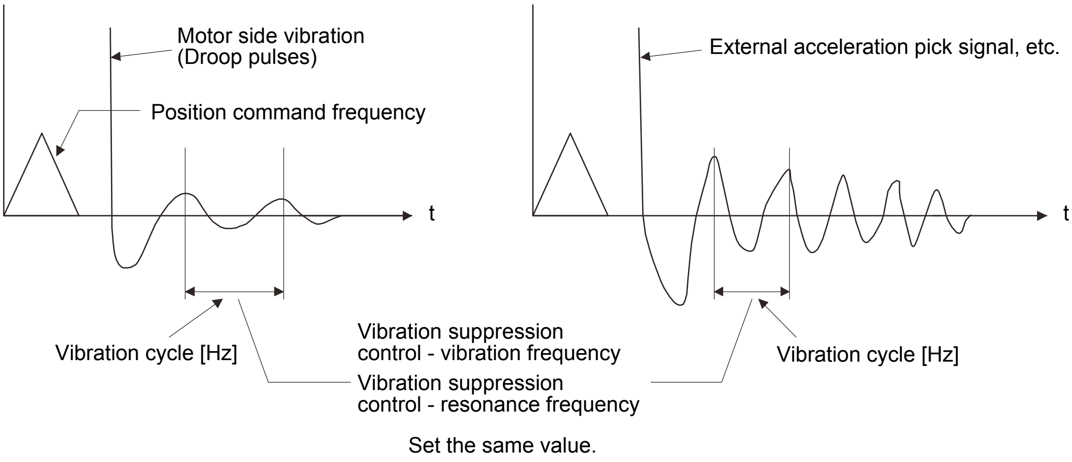

POINT

- When vibrations in the machine side are not transmitted to the motor side, no effect is obtained from setting the vibration frequency in the motor side.
- When the anti-resonance frequency and resonance frequency can be confirmed using the machine analyzer or external device, do not set the same value but set different values to improve the vibration suppression performance.
- A vibration suppression control effect is not produced if the relationship between the model loop gain (parameter No.PB07) value and vibration frequency is as indicated below. Make setting after decreasing model loop gain (PG1), e.g. reduce the response setting.

$$\frac{1}{2\pi}(1.5 \times \mathrm{PG1}) > \text{vibration frequency}$$

10.5 Low-pass filter

(1) Function

When a ball screw or the like is used, resonance of high frequency may occur as the response level of the servo system is increased. To prevent this, the low-pass filter is enabled for a torque command as default. The filter frequency of this low-pass filter is automatically adjusted to the value in the following expression.

$$\text{Filter frequency(rad/s)} = \frac{VG2}{1 + GD2} \times 10$$

However, when the automatically adjusted value is smaller than VG2, the filter frequency will be the VG2 value.

When parameter No.PB23 is set to "□□1□", manual setting can be made with parameter No.PB18.

(2) Parameter

Set the low-pass filter selection (parameter No.PB23.)

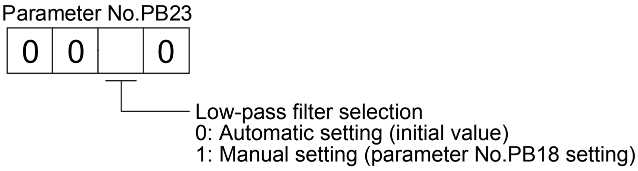

10.6 Gain switching function

This function can change the gains. You can change between gains during rotation and gains during stop or can use an input device to change gains during operation.

10.6.1 Applications

This function is used when.

(1) You want to increase the gains during servo lock but decrease the gains to reduce noise during rotation.

(2) You want to increase the gains during settling to shorten the stop settling time.

(3) You want to change the gains using an input device to ensure stability of the servo system since the load inertia moment ratio varies greatly during a stop (e.g. a large load is mounted on a carrier).

10.6.2 Function block diagram

The valid loop gains PG2, VG2, VIC and GD2 of the actual loop are changed according to the conditions selected by gain switching selection CDP (parameter No.PB26) and gain switching condition CDL (parameter No.PB27).

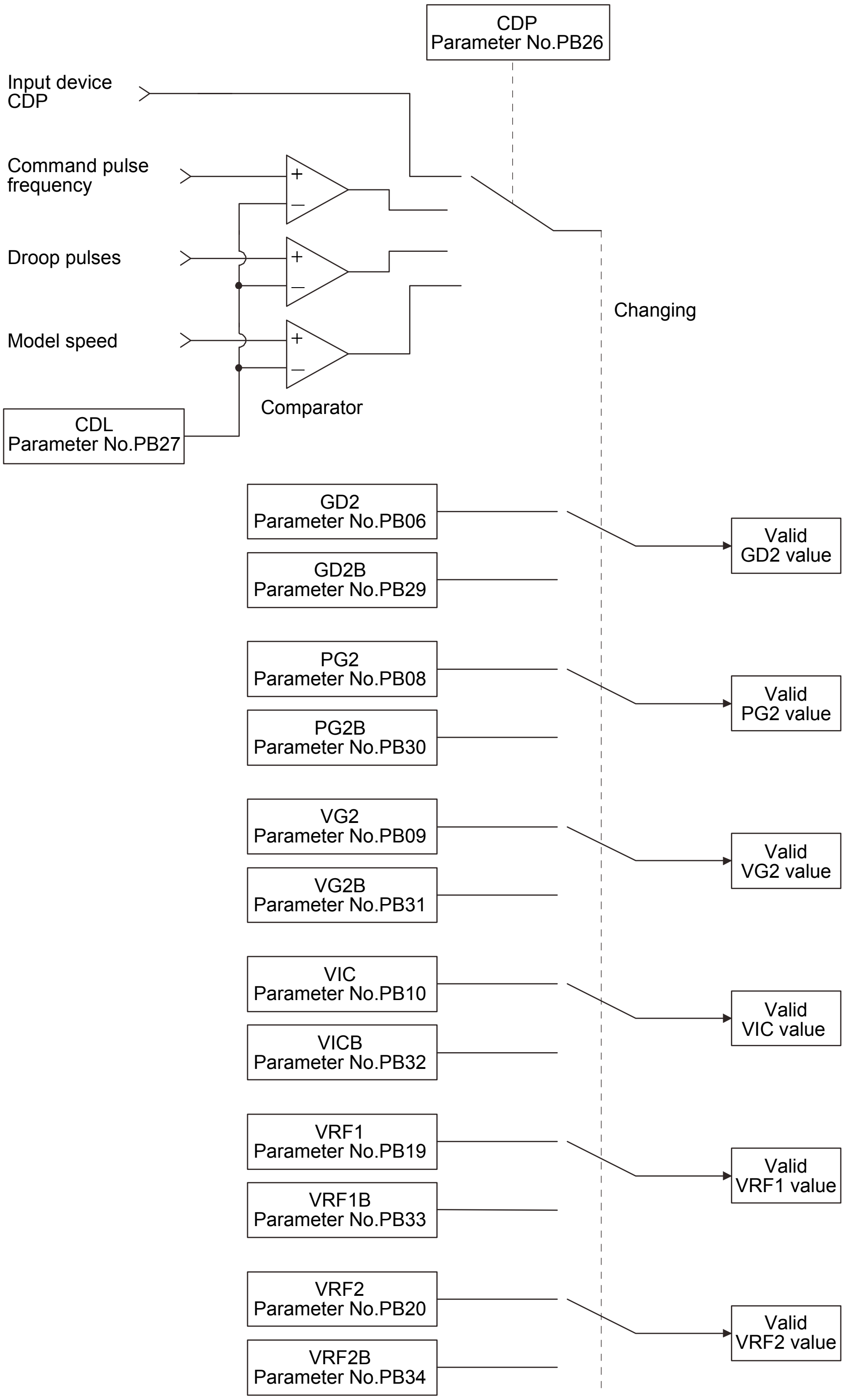

10.6.3 Parameters

When using the gain switching function, always set "□□□3" in parameter No.PA08 (auto tuning) to choose the manual mode of the gain adjustment modes. The gain switching function cannot be used in the auto tuning mode.

Parameter No.	Abbreviation	Name	Unit	Description
PB06	GD2	Ratio of load inertia moment to servo motor inertia moment	Multi-plier (×1)	Control parameters before changing.
PB07	PG1	Model loop gain	rad/s	Position and speed gains of a model used to set the response level to a command. Always valid.
PB08	PG2	Position loop gain	rad/s	
PB09	VG2	Speed loop gain	rad/s	
PB10	VIC	Speed integral compensation	ms	
PB29	GD2B	Gain switching - ratio of load inertia moment to servo motor inertia moment	Multi-plier (×1)	Used to set the ratio of load inertia moment to servo motor inertia moment after changing.
PB30	PG2B	Gain switching - position loop gain	rad/s	Used to set the value of the after-changing position loop gain.
PB31	VG2B	Gain switching - speed loop gain	rad/s	Used to set the value of the after-changing speed loop gain.
PB32	VICB	Gain switching - speed integral compensation	ms	Used to set the value of the after-changing speed integral compensation.
PB26	CDP	Gain switching selection		Used to select the changing condition.
PB27	CDL	Gain switching condition	kpps pulse r/min	Used to set the changing condition values.
PB28	CDT	Gain switching time constant	ms	You can set the filter time constant for a gain change at changing.
PB33	VRF1B	Gain switching - vibration suppression control vibration frequency setting	Hz	Used to set the value of the after-changing vibration suppression control vibration frequency setting.
PB34	VRF2B	Gain switching - vibration suppression control resonance frequency setting	Hz	Used to set the value of the after-changing vibration suppression control resonance frequency setting.

(1) Parameters No.PB06 to PB10

These parameters are the same as in ordinary manual adjustment. Gain switching allows the values of ratio of load inertia moment to servo motor inertia moment, position loop gain, speed loop gain and speed integral compensation to be changed.

(2) Gain switching - ratio of load inertia moment to servo motor inertia moment (GD2B: parameter No.PB29)

Set the ratio of load inertia moment to servo motor inertia moment after changing. If the load inertia moment ratio does not change, set it to the same value as ratio of load inertia moment to servo motor inertia moment (parameter No.PB06).

(3) Gain switching - position loop gain (parameter No.PB30), Gain switching - speed loop gain (parameter No.PB31), Gain switching - speed integral compensation (parameter No.PB32)

Set the values of after-changing position loop gain, speed loop gain and speed integral compensation.

(4) Gain switching selection (parameter No.PB26)

Used to set the gain switching condition. Choose the changing condition in the first digit and second digit. If you set "1" in the first digit here, you can use the gain switching (RY(n＋2)) input device for gain switching.

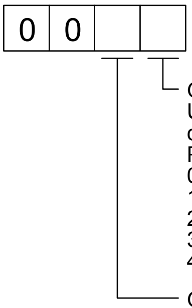

Gain changing selection
Under any of the following conditions, the gains change on the basis of the parameter No.PB29 to PB34 settings.
0: Invalid
1: Gain changing (RY(n+2)) is ON
2: Command frequency (Parameter No.PB27 setting)
3: Droop pulse value (Parameter No.PB27 setting)
4: Servo motor speed (Parameter No.PB27 setting)

Gain changing condition
0: Valid at more than condition (Valid when gain changing (RY(n+2) is ON)
1: Valid at less than condition (Valid when gain changing (RY(n+2) is OFF)

(5) Gain switching condition (parameter No.PB27)

When you selected "command frequency", "droop pulses" or "servo motor speed" in gain switching selection (parameter No.PB26), set the gain switching level.

The setting unit is as follows.

Gain switching condition	Unit
Command frequency	kpps
Droop pulses	pulse
Servo motor speed	r/min

(6) Gain switching time constant (parameter No.PB28)

You can set the primary delay filter to each gain at gain switching. This parameter is used to suppress shock given to the machine if the gain difference is large at gain switching, for example.

(7) Gain switching vibration suppression control

The gain switching vibration suppression control is available only when switching ON/OFF with input devices.

10.6.4 Gain switching procedure

This operation will be described by way of setting examples.

(1) When you choose changing by input device

(a) Setting

Parameter No.	Abbreviation	Name	Setting	Unit
PB07	PG1	Model loop gain	100	rad/s
PB06	GD2	Ratio of load inertia moment to servo motor inertia moment	4.0	Multiplier (×1)
PB08	PG2	Position loop gain	120	rad/s
PB09	VG2	Speed loop gain	3000	rad/s
PB10	VIC	Speed integral compensation	20	ms
PB29	GD2B	Gain switching - ratio of load inertia moment to servo motor inertia moment	10.0	Multiplier (×1)
PB30	PG2B	Gain switching - position loop gain	84	rad/s
PB31	VG2B	Gain switching - speed loop gain	4000	rad/s
PB32	VICB	Gain switching - speed integral compensation	50	ms
PB26	CDP	Gain switching selection	0001 (Changed by ON/OFF of Input device)	
PB28	CDT	Gain switching time constant	100	ms
PB33	VRF1B	Gain switching - vibration suppression control vibration frequency setting	Used to set the value of the after-changing vibration suppression control vibration frequency setting.	Hz
PB34	VRF2B	Gain switching - vibration suppression control resonance frequency setting	Used to set the value of the after-changing vibration suppression control resonance frequency setting.	Hz

(b) Changing timing chart

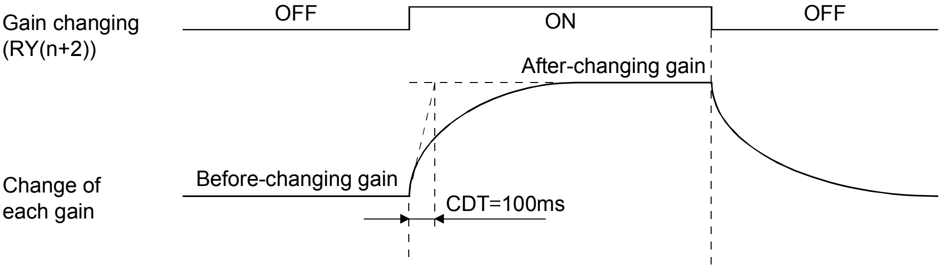

Model loop gain 1			100		
Ratio of load inertia moment to servo motor inertia moment	4.0	→	10.0	→	4.0
Position loop gain	120	→	84	→	120
Speed loop gain	3000	→	4000	→	3000
Speed integral compensation	20	→	50	→	20
Vibration suppression control - vibration frequency setting	50	→	60	→	50
Vibration suppression control - resonance frequency setting	50	→	60	→	50

(2) When you choose changing by droop pulses

(a) Setting

Parameter No.	Abbreviation	Name	Setting	Unit
PB07	PG1	Model loop gain	100	rad/s
PB06	GD2	Ratio of load inertia moment to servo motor inertia moment	4.0	Multiplier (×1)
PB08	PG2	Position loop gain	120	rad/s
PB09	VG2	Speed loop gain	3000	rad/s
PB10	VIC	Speed integral compensation	20	ms
PB29	GD2B	Gain switching - ratio of load inertia moment to servo motor inertia moment	10.0	Multiplier (×1)
PB30	PG2B	Gain switching - position loop gain	84	rad/s
PB31	VG2B	Gain switching - speed loop gain	4000	rad/s
PB32	VICB	Gain switching - speed integral compensation	50	ms
PB26	CDP	Gain switching selection	0003 (Changed by droop pulses)	
PB27	CDS	Gain switching condition	50	pulse
PB28	CDT	Gain switching time constant	100	ms

(b) Changing timing chart

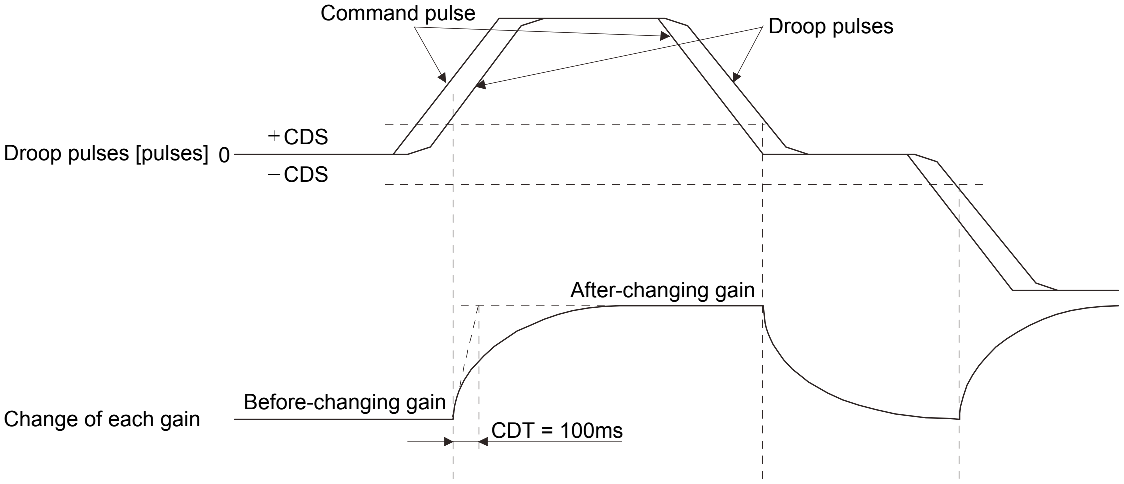

Model loop gain	100						
Ratio of load inertia moment to servo motor inertia moment	4.0	→	10.0	→	4.0	→	10.0
Position loop gain	120	→	84	→	120	→	84
Speed loop gain	3000	→	4000	→	3000	→	4000
Speed integral compensation	20	→	50	→	20	→	50

MEMO

11. TROUBLESHOOTING

11.1 Troubleshooting at start-up

⚠CAUTION	· Excessive adjustment or change of parameter setting must not be made as it will make operation instable.

POINT

- Using the MR Configurator, you can refer to unrotated servo motor reasons, etc.

The following faults may occur at start-up. If any of such faults occurs, take the corresponding action.

No.	Occurrence stage	Fault	Investigation	Possible cause	Reference
1	Power on	· 7-segment LED is not lit. · 7-segment LED flickers.	Not improved if connectors CN2, CN3 and CN6 are disconnected.	1. Power supply voltage fault 2. Servo amplifier is faulty.	
			Improved when connector CN6 is disconnected.	Power supply of CN6 cabling is shorted.	
			Improved when connector CN2 is disconnected.	1. Power supply of encoder cabling is shorted. 2. Encoder is faulty.	
			Improved when connector CN3 is disconnected.	Power supply of CN3 cabling is shorted.	
		Alarm occurs.	Remove cause.		Section 14.4
2	Switch on servo-on signal.	Alarm occurs.	Remove cause.		Section 14.4
		Servo motor shaft is not servo-locked (is free).	1. Check the display to see if the servo amplifier is ready to operate. 2. Check the external I/O signal indication to see if the servo-on signal is ON.	1. Servo-on is not on. (Wiring mistake) 2. Interface power supply (24VDC) is not supplied.	Section 8.5.4
3	Gain adjustment	Rotation ripples (speed fluctuations) are large at low speed.	Make gain adjustment in the following procedure. 1. Increase the auto tuning response level. 2. Repeat acceleration and deceleration several times to complete auto tuning.	Gain adjustment fault	Chapter 9
		Large load inertia moment causes the servo motor shaft to oscillate side to side.	If it is safe to run the servo motor, repeat acceleration and deceleration several times to complete auto tuning.	Gain adjustment fault	Chapter 9
4	Cyclic operation	Position shift occurs	Confirm the command position, current position, cumulative feedback pulses and actual servo motor position.	Communication command fault, slipping of machines, etc.	

11.2 State at error occurrence

An error occurring during operation will result in any of the statuses indicated in the following table.

Error location	Description	Operation mode	
		Test operation	CC-Link operation
Servo side alarm occurrence	Servo operation	Stop	Stop
	CC-Link data communication	Continue	Continue
CC-Link communication error	Servo operation	Stop	Stop
	CC-Link data communication	Stop	Stop
Programmable controller error/STOP	Servo operation	Continue	Stop
	CC-Link data communication	Stop	Stop
Servo side warning occurrence	Servo operation	Stop	Continue
	CC-Link data communication	Continue	Continue

11.3 CC-Link communication error

This section gives the definitions of the indications given in the communication alarm display section.
The servo amplifier has four LED indications.

L.RUN : Lit at normal receive of refresh data. Extinguished when data is not received for a given period of time.
SD : Lit when send data is "0".
RD : Lit when the carrier of receive data is detected.
L.ERR : Lit when the data addressed to the host is in CRC or abort error.

(Note) Communication alarm display LED				Fault
L.RUN	SD	RD	L.ERR	
○	◎	◎	◎	Normal communication is made, but a CRC error sometimes occurs due to noise.
○	◎	◎	●	Normal communication
○	◎	●	◎	Hardware fault
○	◎	●	●	Hardware fault
○	●	◎	◎	Receive data results in CRC error, disabling a response.
○	●	◎	●	Data does not reach the host.
○	●	●	◎	Hardware fault
○	●	●	●	Hardware fault
●	◎	○	●	Hardware fault
●	◎	◎	◎	Polling response is made, but refresh receive is in CRC error.
●	◎	◎	●	Hardware error or manufacturer setting switch (SW2) is changed.
●	◎	●	◎	Hardware fault
●	◎	●	●	Hardware fault
●	●	◎	◎	Data addressed to the host resulted in CRC error.
●	●	◎	●	Data does not reach the host, or the data addressed to the host cannot be received due to noise.
●	●	●	◎	Hardware fault
●	●	●	○	Baud rate setting illegal
●	●	○	○	Station number setting illegal
●	○	○	◎	Baud rate or station number setting changed midway (ERROR flickers for about 4s)
●	●	●	●	Data cannot be received due to power-off, power supply failure, open cable, etc. WDT error occurrence (hardware fault)

Note. ○ : Lit ● : Extinguished ◎ : Flicker

11.4 When alarm or warning has occurred

POINT

- As soon as an alarm occurs, turn the servo off, and shut off the main circuit power.
- Parameter error (A37) and warnings are not recorded in the alarm history.

If any alarm or warning has occurred, refer to section 11.4.2 and 11.4.3. For a trouble which does not trigger an alarm or warning, refer to section 11.6 and remove the cause.

11.4.1 Alarms and warning list

When a fault occurs during operation, the corresponding alarm or warning is displayed. If any alarm or warning has occurred, refer to section 11.4.2 or 11.4.3 and take the appropriate action. When an alarm occurs, ALM turns off.

After its cause has been removed, the alarm can be deactivated in any of the methods marked ○ in the alarm deactivation column.

	Display	Name	Alarm deactivation		
			Power OFF→ON	(Note3) MR Configurator parameter unit	(Note2) Alarm reset (RES)
Alarms	A10	Undervoltage	○	○	○
	A12	Memory error 1 (RAM)	○		
	A13	Clock error	○		
	A15	Memory error 2 (EEP-ROM)	○		
	A16	Encoder error 1(At power on)	○		
	A17	Board error	○		
	A19	Memory error 3 (Flash-ROM)	○		
	A1A	Motor combination error	○		
	A20	Encoder error 2 (during runtime)	○		
	A21	Encoder error 3 (during runtime)	○		
	A24	Main circuit error	○	○	○
	A25	Absolute position erase	○		
	A30	Regenerative error	(Note 1) ○	(Note 1) ○	(Note 1) ○
	A31	Overspeed	○	○	○
	A32	Overcurrent	○		
	A33	Overvoltage	○	○	○
	A35	Command pulse frequency alarm	○	○	○
	A37	Parameter error	○		
	A45	Main circuit device overheat	(Note 1) ○	(Note 1) ○	(Note 1) ○
	A46	Servo motor overheat	(Note 1) ○	(Note 1) ○	(Note 1) ○
	A47	Cooling fan alarm	○		
	A50	Overload 1	(Note 1) ○	(Note 1) ○	(Note 1) ○
	A51	Overload 2	(Note 1) ○	(Note 1) ○	(Note 1) ○
	A52	Error excessive	○	○	○
	A61	Operation alarm	○	○	○
	A8A	Serial communication time-out	○	○	○
	A8D	CC-Link communication error	○	○	○
	A8E	Serial communication error	○	○	○
	888	Watchdog	○		

	Display	Name
Warnings	A90	Home positioning incomplete warning
	A92	Open battery cable warning
	A96	Home position setting error
	A98	Software limit warning
	A99	Stroke limit warning
	A9D	CC-Link warning 1
	A9E	CC-Link warning 2
	A9F	Battery warning
	AE1	Overload warning 1
	AE6	Servo emergency stop warning
	AE8	Cooling fan speed reduction warning
	AE9	Main circuit off warning
	AEC	Overload warning 2
	AED	Output watt excess warning

Note 1. Deactivate the alarm about 30 minutes of cooling time after removing the cause of occurrence.

2. Turns on RY(n+1)A or RY(n+3)A.

3. Clicking the "Alarm reset" button on the "Alarm display" screen of MR Configurator allows an alarm to be deactivated. Pressing the "STOP RESET" key of the parameter unit allows an alarm to be deactivated.

11.4.2 Remedies for alarms

⚠CAUTION

- When an alarm occurs, reset the alarm after removing the cause and ensuring safety. Then, restart the operation. Otherwise, injury may occur.
- If an absolute position erase (A25) occurs, be sure to set the home position again. Not doing so may cause unexpected operation.
- As soon as an alarm occurs, turn off Servo-on (RYn0) and shut off the power.

POINT

- When any of the following alarms has occurred, do not deactivate the alarm and resume operation repeatedly. To do so will cause the servo amplifier/servo motor to fail. Remove the cause of occurrence, and leave a cooling time of 30 minutes or longer before resuming operation.
  - Regenerative error (A30)
  - Main circuit device overheat (A45)
  - Servo motor overheat (A46)
  - Overload 1 (A50)
  - Overload 2 (A51)
- For the alarm deactivation method, refer to section 11.4.1.
- Parameter error (A37) is not recorded in the alarm history.

When an alarm occurs, the trouble (ALM) switches off and the dynamic brake is operated to stop the servo motor. At this time, the display indicates the alarm No.

Remove the cause of the alarm in accordance with this section. Use MR Configurator to refer to a factor of alarm occurrence. Use the alarm history of MR Configurator to refer to the alarm detailed information.

Display	Name	Definition	Cause	Action	(Note 2) Alarm detailed information
A10	Undervoltage	Power supply voltage dropped.	1. Power supply voltage is low. <Check method> Check that the power supply voltage is the following value or more. 200V class: 160VAC 100V class: 83VAC 400V class: 280VAC	Check the power supply.	2
			2. Shortage of power supply capacity caused the power supply voltage to drop at start, etc. <Check method> Check that the bus voltage is the following value or more. 200V class: 200VDC 100V class: 158VDC 400V class: 380VDC		
			3. The bus voltage dropped to the following value or less. 200V class: 200VDC 100V class: 158VDC 400V class: 380VDC		
			4. There was an instantaneous control circuit power failure of 60ms or longer		1
			5. Faulty parts in the servo amplifier. <Check method> 1. The alarm occurs even if the power is switched on after disconnection of all cables except the control circuit power supply cables. 2. Check that the bus voltage is the following value or more. 200V class: 200VDC 100V class: 158VDC 400V class: 380VDC	Change the servo amplifier.	
			6. The power supply voltage is distorted. When power impedance is high, waveform of power supply voltage may be distorted due to the power regeneration current and recognized as undervoltage.	1. Set parameter No.PC27 to "0001". 2. Review the power supply.	
A12	Memory error 1 (RAM)	RAM memory fault	Faulty parts in the servo amplifier. <Check method> Alarm occurs even if the power is switched on after disconnection of all cables except the control circuit power supply cable.	Change the servo amplifier.	
A13	Clock error	Printed board fault			

Display	Name	Definition	Cause	Action	(Note 2) Alarm detailed information
A15	Memory error 2 (EEP-ROM)	EEP-ROM fault	1. Faulty parts in the servo amplifier <Check method> The alarm occurs even if the power is switched on after disconnection of all cables except the control circuit power supply cable.	Change the servo amplifier.	
			2. The number of write times to EEP-ROM exceeded 100,000.		
A16	Encoder error 1 (At power on)	Communication error occurred between encoder and servo amplifier.	1. Encoder connector (CN2) is disconnected.	Connect correctly.	44
			2. A wrong type of encoder cable (2-wire, 4-wire) was selected in parameter setting.	Correct the setting in the fourth digit of parameter No.PC22.	
			3. Encoder cable faulty (Wire breakage or shorted)	Repair or change the cable.	
			4. Encoder fault.	Change the servo motor.	
			5. Servo motor other than that of MR-J3 series was connected.	Check the combination of the servo amplifier and servo motor.	63
			6. External noise caused a communication error. <Check method> 1. Check that the encoder cable and the power cable run in parallel. 2. Check if the environment is affected by the noise of surrounding electromagnetic valve, magnetic contactor, relay, etc. 3. Check the servo amplifier and servo motor for grounding. 4. Check if there is a factor causing surrounding static electricity. 5. Check shield procedure of the encoder cable.	Take the grounding and noise reduction techniques.	
A17	Board error	CPU/parts fault	Faulty parts in the servo amplifier. <Check method> Alarm occurs even if the power is switched on after disconnection of all cables except the control circuit power supply cable.	Change the servo amplifier.	
A19	Memory error 3 (Flash ROM)	ROM memory fault			
A1A	Motor combination error	Wrong combination of servo amplifier and servo motor.	Wrong combination of servo amplifier and servo motor connected.	Check the combination of the servo amplifier and the servo motor.	

Display	Name	Definition	Cause	Action	(Note 2) Alarm detailed information
A20	Encoder error 2 (during runtime)	Communication error occurred between encoder and servo amplifier.	1. Encoder cable disconnected. <Check method> Check the encoder cable connection.	Connect servo amplifier connector (CN2) and servo motor encoder connector correctly.	47
			2. Encoder cable faulty <Check method> Check if the encoder cable is disconnected or shorted.	Repair or change the cable.	
			3. An excessive acceleration occurred due to oscillation, etc. is detected by the encoder. <Check method> Check if servo motor vibration and unusual noise, etc. is occurring.	1. Reduce the position loop gain. 2. Decrease the auto tuning response level.	8
			4. Encoder fault.	Change the servo motor.	
			5. External noise caused a communication error. <Check method> 1. Check that the encoder cable and the power cable run in parallel. 2. Check if the environment is affected by the noise of surrounding electromagnetic valve, magnetic contactor, relay, etc. 3. Check the servo amplifier and servo motor for grounding. 4. Check if there is a factor causing surrounding static electricity. 5. Check shield procedure of the encoder cable.	Take the grounding and noise reduction techniques.	
A21	Encoder error 3 (during runtime)	Error occurred in encoder.	1. An excessive acceleration occurred due to oscillation, etc. is detected by the encoder <Check method> Check if servo motor vibration and unusual noise, etc. is occurring.	1. Reduce the position loop gain. 2. Decrease the auto tuning response level.	
			2. An error in the detection circuit of the encoder.	Change the servo motor.	

Display	Name	Definition	Cause	Action	(Note 2) Alarm detailed information
A24	Main circuit error	Ground fault occurred at the servo motor poweroutput (U, V and W).	1. Power input lines and servo motor power lines are in contact. (Power input lines and servo motor power lines are in contact with main circuit terminal block (TE1).)	Connect correctly.	
			2. A ground fault or short occurred with the servo motor power cable. (A ground fault or short due to the deterioration of insulator.)	Repair the cable.	
			3. Servo motor fault. <Check method> The alarm occurs even when the servo motor power lines are disconnected from the power output (U, V, and W).	Change the servo amplifier.	
			4. Servo motor fault. <Check method> The alarm does not occur when the power is switched on after disconnection of servo motor power lines in servo motor side terminal.	Change the servo motor.	
			5. Malfunction of external dynamic brake. <Check method> The alarm does not occur if power is switched on after disconnection of servo motor power lines in external dynamic brake-side terminal.	1. Check the parameter and dynamic brake sequence. 2. Replace the external dynamic brake	
			6. External noise caused the overcurrent detection circuit to misoperate. <Check method> 1. Check if the environment is affected by the noise of surrounding electromagnetic valve, magnetic contactor, relay,etc. 2. Check the servo amplifier and servo motor for grounding.	Take the grounding and noise reduction techniques.	
A25	Absolute position erase	Absolute position data is erased.	1. Voltage drop in encoder (Battery disconnected.)	Connect the battery and make home position setting again.	
			2. Battery voltage low	Change the battery. Always make home position setting again.	
			3. Battery connector is loosely connected or battery is faulty.		
			4. Encoder cable is faulty.	Repair or replace theencoder cable.	
			5. Encoder fault.	Change the servo motor.	
		Power was switched on for the first time in the absolute position detection system.	Home position not set.	Connect the battery and make home position setting again.	

Display	Name	Definition	Cause	Action	(Note 2) Alarm detailed information
A30	Regenerative error	Permissible regenerative power of the built-in regenerative resistor or regenerative option is exceeded.	1. Wrong setting of parameter No. PA02	Set correctly.	1
			2. High-duty operation or continuous regenerative operation caused the permissible regenerative power of the regenerative option to be exceeded. <Check method> Check the regenerative load ratio on the status display.	1. Reduce the frequency of positioning. 2. Use the regenerative option of larger capacity. 3. Reduce the load.	
			3. Power supply voltage is abnormal. 200V class: 260VAC or more 100V class: More than 135VAC 400V class: 535VAC or more	Check the power supply.	
			4. Built-in regenerative resistor or regenerative option is not connected.	Connect correctly.	4
			5. Built-in regenerative resistor or regenerative option faulty.	Change the servo amplifier or regenerative option.	
		Regenerative transistor fault	6. Servo amplifier fault. (Regenerative transistor faulty.) <Check method> 1. The regenerative option has overheated abnormally. 2. The alarm occurs even after removal of the built-in regenerative resistor or regenerative option.	Change the servo amplifier.	
			7. Servo amplifier fault. (Regenerative circuit fault)	Change the servo amplifier.	2
A31	Overspeed	Speed has exceeded the instantaneous permissible speed.	1. Small acceleration/deceleration time constant caused overshoot to be large.	Increase acceleration/deceleration time constant.	
			2. Servo system is instable to cause overshoot.	1. Re-set servo gain to proper value. 2. If servo gain cannot be set to proper value. 1) Reduce load inertia moment ratio; or 2) Reexamine acceleration/ deceleration time constant.	
			3. Electronic gear ratio is large (parameters No.PA06, PA07)	Set correctly.	
			4. Encoder faulty.	Change the servo motor.	

Display	Name	Definition	Cause	Action	(Note 2) Alarm detailed information
A32	Overcurrent	Current that flew is higher than the permissible current of the servo amplifier.	1. A ground fault or short occurred with the servo motor power cable. (A ground fault or short due to the deterioration of insulator.) <Check method> The alarm occurs even if the power is switched on after disconnection of servo motor power lines in servo motor-side terminal.	Repair the cable.	
			2. External dynamic brake faulty. <Check method> The alarm does not occur when the power is switched on after disconnection of servo motor power lines in external dynamic brake-side terminal.	1. Check the parameter and dynamic brake sequence. 2. Change the external dynamic brake.	
			3. Servo amplifier fault. <Check method> Alarm occurs even if the power is switched on after disconnection of servo motor power lines from the servo motor power output (U, V, and W).	Change the servo amplifier.	
			4. Servo motor fault. <Check method> The alarm does not occur when the power is switched on after disconnection of servo motor power lines in servo motor side terminal.	Change the servo motor.	
			5. External noise caused the overcurrent detection circuit to misoperate. <Check method> 1. Check if the environment is affected by the noise of surrounding electromagnetic valve, magnetic contactor, relay, etc. 2. Check the servo amplifier and servo motor for grounding.	Take the grounding and noise reduction techniques.	
			6. Encoder fault.	Change the servo motor.	2

Display	Name	Definition	Cause	Action	(Note 2) Alarm detailed information
A33	Overvoltage	Bus voltage exceeded to following voltage. 200V class and 100V class: 400VDC 400V class: 800VDC	1. Regenerative option is not used.	Use a regenerative option.	
			2. Though the regenerative option is used, the parameter No.PA02 setting is "□□00 (not used)".	Set correctly.	
			3. Lead of built-in regenerative resistor or regenerative option is open or disconnected.	1. Change the lead. 2. Connect correctly.	
			4. Wire breakage of built-in regenerative resistor or regenerative option.	1. For built-in regenerative resistor, change the servo amplifier. 2. For regenerative option, change the regenerative option.	
			5. Capacity of built-in regenerative resistor or regenerative option is insufficient.	Add regenerative option or increase capacity.	
			6. The jumper across BUE-SD of the FR-BU2 brake unit is removed.	Fit the jumper across BUE-SD.	
			7. Impedance in the power supply line is high, and leak current from the servo motor power lines is large.	Use a regenerative option. (Product without built-in regenerative resistor)	
			8. Ground fault occurred in the servo motor power output (U, V, W).	Correct the wiring.	
			9. High power supply voltage	Check the power supply.	
			10. Servo amplifier fault. (Regenerative transistor fault.)	Change the servo amplifier.	
A35	Command pulse frequency error	Input pulse frequency of the manual pulse generator is too high.	1. Pulse frequency of the manual pulse generator is too high.	Lower the pulse frequency value.	
			2. Noise entered the pulses of the manual pulse generator.	Take action against noise.	
			3. Manual pulse generator fault.	Change the manual pulse generator.	

Display	Name	Definition	Cause	Action	(Note 2) Alarm detailed information
A37	Parameter error	Parameter setting is wrong.	1. Servo amplifier fault caused the parameter setting to be rewritten.	Change the servo amplifier.	
			2. Regenerative option not used with servo amplifier was selected in parameter No.PA02.	Set parameter No.PA02 correctly.	2
			3. Value outside setting range has been set in electronic gear.	Set parameters No.PA06, PA07 correctly.	1
			4. A negative value is set in software limit + (parameter No.PC31, PC32).	Set positive value in parameter No.31, PC32.	
			5. A positive value is set in software limit - (Parameter No.PC33, PC34).	Set negative value in parameter No.PC33, PC34.	
			6. Opposite sign has been set in software limit + (parameters No.PC31, PC32). Similarly, opposite sign has been set in software limit - (parameters No.PC33, PC34).	Set parameters No.PC31 to PC34 correctly.	2
			7. Opposite sign has been set in position range output address + (parameters No. PC37, PC38). Similarly, opposite sign has been set in position range output address - (parameters No.PC39, PC40).	Set parameters No.PC37 to PC40 correctly.	
			8. The number of write times to EEP-ROM exceeded 100,000 due to parameter write, etc.	Change the servo amplifier.	1, 2
			9. The torque limit switching dog system or torque limit switching data set system is selected for home position return in the point table positioning operation. (Parameter No.PC02)	These home position return types cannot be used. Set parameter No.PC02 correctly.	1
			10. Speed control operation was executed with the MR-J3-D01 mounted to the servo amplifier.	When the MR-J3-D01 is mounted to the servo amplifier, speed control operation cannot be executed. Remove the MR-J3-D01.	2
		Point table setting is wrong.	Setting value is out of the setting range.	Set it correctly.	1
A45	Main circuit device overheat	Main circuit device overheat.	1. Ambient temperature of servo amplifier is over 55℃ (131°F).	Check environment so that ambient temperature is 0 to 55℃ (32 to 131°F).	
			2. Used beyond the specifications of close mounting.	Use within the range of specifications. (Refer to section 2.1.)	
			3. The power supply was turned on and off continuously by overloaded status.	Check operation pattern.	
			4. A cooling fan or heat sink is clogged up.	Clean the cooling fan or heat sink.	
			5. Servo amplifier fault. (It occurred after the power supply is turned on.)	Change the servo amplifier.	

Display	Name	Definition	Cause	Action	(Note 2) Alarm detailed information
A46	Servo motor overheat	Servo motor temperature rise actuated the thermal sensor.	1. Ambient temperature of servo motor is over 40℃ (104°F).	Check environment so that ambient temperature is 0 to 40℃ (32 to 104°F).	1, 2, 10, 20
			2. Servo motor is overloaded.	1. Reduce the load. 2. Check operation pattern. 3. Use servo motor that provides larger output.	
			3. Thermal sensor in encoder is faulty.	Change the servo motor.	1
A47	Cooling fan alarm	The cooling fan of the servo amplifier stopped, or its speed decreased to or below the alarm level.	1. Cooling fan life expiration (Refer to section 2.5.)	Change the cooling fan of the servo amplifier.	
			2. Foreign matter caught in the cooling fan stopped rotation.	Remove the foreign matter.	
			3. The servo amplifier failed.	Change the servo amplifier.	
A50	Overload 1	Load exceeded overload protection characteristic of servo amplifier.	1. Servo amplifier is used in excess of its continuous output current.	1. Reduce the load. 2. Check operation pattern. 3. Check if the electromagnetic brake is released. 4. Check the friction of machine. 5. Use a servo amplifier and a servo motor that provide larger output.	1
			2. After Overload 2 (A51) occurred and the alarm was cleared by the power supply turned OFF and ON, the overload operations have been repeated.	1. Reduce the load. 2. Check operation pattern. 3. Use a servo motor that provides larger output.	1
			3. Servo system is instable, causing hunting and vibration.	1. Repeat acceleration/deceleration to execute auto tuning. 2. Change auto tuning response setting. 3. Set auto tuning to OFF and make gain adjustment manually. 4. Check the coupling with servo motor shaft for looseness.	1, 2
			4. Encoder faulty. <Check method> When the servo motor shaft is rotated with the servo-off, the cumulative feedback pulses do not vary in proportion to the rotation angle of the shaft but the indication skips or returns midway.	Change the servo motor.	

Display	Name	Definition	Cause	Action	(Note 2) Alarm detailed information
A51	Overload 2	Maximum output current flowed continuously for several seconds due to machine collision or the like.	1. Servo amplifier fault. <Check method> The alarm does not occur when the operation is checked on the servo motor alone, disconnected from the machine. (Check the operation by restoring to the initial gain.)	Change the servo amplifier.	
			2. Servo system is instable, causing hunting and vibration.	1. Repeat acceleration/deceleration to execute auto tuning. 2. Change auto tuning response setting. 3. Set auto tuning to OFF and make gain adjustment manually. 4. Check the coupling with servo motor shaft for looseness.	
			3. Machine collision	1. Check operation pattern. 2. Install limit switches. 3. Check if the electromagnetic brake is released.	
			4. Wrong connection of servo motor. Servo amplifier's output terminals U, V, W do not match servo motor's input terminals U, V, W.	Connect correctly.	
			5. Encoder fault <Check method> When the servo motor shaft is rotated with the servo-off, the cumulative feedback pulses do not vary in proportion to the rotation angle of the shaft. Or error such as deviation in position within one-revolution at a stop.	Change the servo motor.	
			6. Wire breakage of power supply cable.	Repair the cable.	
			7. Servo motor fault.	Change the servo motor.	

Display	Name	Definition	Cause	Action	(Note 2) Alarm detailed information
A52	Error excessive	The difference between the model position and the actual servo motor position exceeds three rotations. (Refer to the function block diagram in section 1.1.2.)	1. Acceleration/deceleration time constant is too small.	Increase the acceleration/deceleration time constant.	4
			2. Forward rotation torque limit (parameter No.PA11) or reverse rotation torque limit (parameter No.PA12) are too small.	Increase the torque limit value.	
			3. Motor cannot be started due to torque shortage caused by power supply voltage drop.	1. Check the power supply capacity. 2. Use servo motor which provides larger output.	
			4. Position loop gain (parameter No.PB08) value is small.	Increase set value and adjust to ensure proper operation.	
			5. Servo motor shaft was rotated by external force.	1. When torque is limited, increase the limit value. 2. Reduce the load. 3. Use servo motor that provides larger output.	
			6. Machine collision	1. Check operation pattern. 2. Install limit switches.	
			7. Encoder fault	Change the servo motor.	
			8. Wrong connection of servo motor. Servo amplifier's output terminals U, V, W do not match servo motor's input terminals U, V, W.	Connect correctly.	
			9. Wire breakage of power supply cable.	Repair the cable.	
			10. Commands were inputted when the torque limit value is set to "0".	Set torque limit to proper value.	8
A61	Operation alarm	Setting mistake of auxiliary function.	"1" or "3" is set for the auxiliary function of point table No.255.	Set "0" or "2" for the value of auxiliary function.	1
A8A	Serial communication time-out error	USB communication or RS-422 communication stopped for longer than the specified time.	1. Communication cable breakage.	Repair or change the communication cable.	
			2. Communication cycle longer than regulated time.	Shorten the communication cycle.	
			3. Wrong protocol.	Correct protocol.	

Display	Name	Definition	Cause	Action	(Note 2) Alarm detailed information
A8D	CC-Link communication error	Normal communication with the master station cannot be made.	1. The station number switch (STATION NO.) is set to 0 or above 64.	Set the station number to within the range of 1 to 64, and turn the power on.	
			2. The baud rate switch (MODE) is set to other than 0 to 4.	Set the baud rate switch (MODE) to within the range of 0 to 4.	
			3. The transmission status is abnormal.	Reexamine the wiring.	
			4. Incorrect wiring of CC-Link twisted cable	1. Repair or change the CC-Link twisted cable. 2. Connect the cable or connector correctly.	
			5. CC-Link twisted cable faulty.		
			6. The CC-Link connector has come off.		
			7. The termination resistor is not connected.	Connect the termination resistor correctly.	
			8. Noise entered the CC-Link twisted cable.		
			9. The termination controller CC-Link unit was reset.		
			10. The manufacturer setting switch (SW2) was changed.	Set the manufacturer setting switch (SW2) to the default setting (left).	
A8E	Serial communication error	Serial communication error occurred between servo amplifier and communication device (e.g.personal computer).	1. Communication cable error (Open cable or short circuit).	Repair or change the communication cable.	1, 2
			2. Communication device (e.g. personal computer) setting faulty.	Check the communication setting of the communication device (e.g. personal computer).	
			3. The character codes are incorrect.	Check the character codes.	4
			4. Command is incorrect.	Check the command.	8
			5. Data No. is incorrect.	Check the data No.	10
(Note 1) 888	Watchdog	CPU, parts faulty.	1. Fault of parts in servo amplifier. <Check method> The alarm occurs even if the power is switched on after disconnection of all cables except the control circuit power supply cable.	Change the servo amplifier.	
			2. External noise caused the CPU in the servo amplifier to misoperate.	1. Check if the environment is affected by the noise of surrounding electromagnetic valve or magnetic contactor, relay, etc. 2. Check the servo amplifier for grounding.	

Note. 1. At power-on, "888" appears instantaneously, but it is not an error.

2. To check the alarm detailed information, MR Configurator is required. The alarm detailed information can be checked with "Alarm History" window displayed when you select the alarm/alarm history on MR Configurator.

11.4.3 Remedies for warnings

⚠CAUTION

- If an absolute position counter warning (AE3) occurred, always make home position setting again. Not doing so may cause unexpected operation.

POINT

- When any of the following warnings has occurred, do not resume operation by switching power of the servo amplifier OFF/ON repeatedly. The servo amplifier and servo motor may become faulty. If the power of the servo amplifier is switched OFF/ON during the warnings, allow more than 30 minutes for cooling before resuming operation.
  - Excessive regenerative warning (AE0)
  - Overload warning 1 (AE1)
- Warnings are not recorded in the alarm history.

When AE6 and AE9 occur, the servo turns off. When any other warning occurs, the operation continues. However, an alarm may occur, causing improper operation.
Remove the cause of warning according to this section. Use MR Configurator to refer to the cause of warning occurrence.

Display	Name	Definition		Cause	Action
A90	Home position return incomplete	In incremental system	Positioning operation was performed without home position return.	1. Positioning operation was performed without home position return.	Perform home position return.
			Home position return ended abnormally.	2. Home position return speed could not be decreased to the creep speed. 3. Limit switch was actuated during home position return starting at other than position beyond dog.	Check home position return speed/creep speed/moving distance after proximity dog.
		In absolute position detection system	Positioning operation was performed without home position setting.	1. Positioning operation was performed without home position setting.	Perform home position setting.
			Home position setting ended abnormally.	2. Home position return speed could not be decreased to the creep speed. 3. Limit switch was actuated during home position setting starting at other than position beyond dog.	Check home position return speed/creep speed/moving distance after proximity dog.
			Operation was performed without making home position setting while an absolute position erase (A25) is being occurred.	4. Voltage drop in encoder (Battery disconnected.)	Connect the battery and make home position setting again.
				5. Battery voltage low	Change the battery. Always make home position setting again.
				6. Battery cable or battery is faulty.	
A92	Open battery cable warning	Absolute position detection system battery voltage is low.		1. Battery cable is open.	Repair cable or changed.
				2. Battery voltage supplied from the servo amplifier to the encoder fell to about 3V or less. (Detected with the encoder)	Change the battery.
				3. An encoder cable was disconnected.	Repair or replace the encoder cable.

Display	Name	Definition	Cause	Action
A96	Home position setting warning	Home position setting could not be made.	1. Out of in-position range at home positioning.	Make home position setting within the in-position range.
			2. Position command was inputted during the home position setting.	Input position command after home positioning.
			3. Creep speed high.	Reduce creep speed.
A98	Software limit warning	Software limit set in parameter is reached.	1. Software limit was set within actual operation range.	Set parameter No.PC31 to PC34 correctly.
			2. Point table of position data in excess of software limit was executed.	Set point table correctly.
			3. Software limit was reached during JOG operation or manual pulse generator operation.	Perform operation within software limit range.
A99	Stroke limit warning	The limit switch of command rotation direction (LSP or LSN) was turned off.	The forward rotation stroke end (LSP) was turned off during forward rotation.	Reexamine the travel range not to turn off LSP/LSN.
			The reverse rotation stroke end (LSN) was turned off during reverse rotation.	
A9D	CC-Link warning 1	The station number switch or baud rate switch position was changed from the setting at power-on.	1. The station number switch position was changed from the setting at power-on.	Restore to the setting at the time of power on.
			2. The baud rate switch position was changed from the setting at power-on.	
			3. The occupied station count switch position was changed from the setting at power-on.	
A9E	CC-Link warning 2	Communication error of cable.	1. The transmission status is abnormal.	Take measures against noise.
			2. Incorrect wiring of CC-Link twisted cable	1. Change the CC-Link twisted cable. 2. Connect the cable or connector correctly.
			3. CC-Link twisted cable faulty.	
			4. The CC-Link connector has come off.	
			5. The termination resistor is not connected.	Connect the termination resistor correctly.
			6. Noise entered the CC-Link twisted cable.	
A9F	Battery warning	Voltage of battery for absolute position detection system reduced.	Battery voltage fell to 3.2V or less. (Detected with the servo amplifier)	Change the battery.
AE0	Excessive regenerative warning	Regenerative power may exceed the permissible regenerative power of the built-in regenerative resistor or the regenerative option.	Regenerative power increased to 85% of the permissible regenerative power of the built-in regenerative resistor or the regenerative option. <Check method> Call the status display and check the regenerative load ratio.	1. Reduce frequency of positioning. 2. Change the regenerative option to the one with larger capacity. 3. Reduce the load. 4. Change the servo amplifier/servo motor to the one with larger capacity.
AE1	Overload warning 1	Overload alarm 1 or 2 may occur.	Load increased to 85% or more of the overload alarm 1 or 2 occurrence level.	Refer to overload 1 (A50) and overload 2 (A51).
AE3	Absolute position counter warning	Absolute position encoder pulses faulty.	1. Noise entered the encoder.	Take measures against noise.
			2. Encoder faulty.	Change the servo motor.
		The multi-revolution counter value of the absolute position encoder exceeded the maximum revolution range.	3. The movement amount from the home position exceeded 32767 rotations or 37268 rotations in succession.	Make home position setting again.
AE6	Servo forced stop warning	EMG is off.	External forced stop was enabled. (EMG was turned off.)	Ensure safety and deactivate forced stop.

Display	Name	Definition	Cause	Action
AE8	Cooling fan speed reduction warning	The speed of the servo amplifier decreased to or below the warning level. (This warning is not displayed with MR-J3-70T/100T among servo amplifiers equipped with a cooling fan.)	1. Cooling fan life expiration (Refer to section 2.5.)	Change the cooling fan of the servo amplifier.
			2. The power supply of the cooling fan is broken.	Change the servo amplifier.
			3. A cooling fan is clogged with foreign matter and the speed of it decreased.	Remove the foreign matter.
AE9	Main circuit off warning	Servo-on (SON) was switched on with main circuit power off.		Switch on main circuit power.
AEC	Overload warning 2	Operation, in which a current exceeding the rating flew intensively in any of the U, V and W phases of the servo motor, was repeated.	During a stop, the status in which a current flew intensively in any of the U, V and W phases of the servo motor occurred repeatedly, exceeding the warning level.	1. Reduce the positioning frequency. 2. Reduce the load. 3. Change the servo amplifier/ servo motor to the one with larger capacity.
AED	Output watt excess warning	The status, in which the output wattage (speed × torque) of the servo motor exceeded the rated output, continued steadily.	Continuous operation was performed with the output wattage (speed × torque) of the servo motor exceeding 150% of the rated output.	1. Reduce the servo motor speed. 2. Reduce the load. 3. Replace the servo amplifier/ servo motor with the one of larger capacity.

11.5 Point table error

When a point table error occurs, the parameter error (A37) occurs. After the parameter No. of parameter error (A37), the point table error details are displayed.

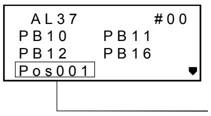

```
 AL37        #00
PB10   PB11
PB12   PB16
Pos001
```

Point table error details
For the point table No.1 position data error

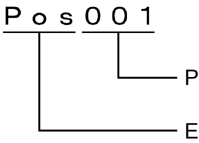

Point table No. with error

Error item
- Pos: position data
- Spd: speed
- Acc: acceleration time constant
- Dec: deceleration time constant
- Dwl: dwell
- Aux: auxiliary function

11.6 Trouble which does not trigger an alarm/warning

POINT

- When the servo amplifier/servo motor/encoder malfunctions, the following status may occur.

The following example shows possible causes which do not trigger alarm or warning. Refer to this section to remove the cause of the error.

Description	Check method	Possible cause	Action
The LED display disappears.	When the display is turned on by disconnecting all connectors except the power supply, check if the disconnected wires are shorted.	The external I/O terminal is shorted.	Review the wiring of I/O signals.
	Check if the control circuit power supply of the servo amplifier is off.	The control circuit power supply is not applied.	Turn on the control circuit power.
	Check if the voltage of the control circuit power supply dropped.	The voltage of the control circuit power supply has dropped.	Set the control circuit power supply voltage within the rated range.
The servo motor does not operate.	Check if warning (A99) is occurring.	Forward rotation stroke end (LSP) and reverse rotation stroke end (LSN) is not switched on.	Switch on the forward rotation stroke end (LSP) and reverse rotation stroke end (LSN).
	Check the connection with servo motor.	The output terminals (U, V, W) of the servo amplifier do not match the input terminals (U, V, W) of the servo motor.	Connect each phase of U, V and W correctly.
	Check if warning (AE9) is occurring.	The servo-on was turned on while the main circuit power of servo amplifier is off.	Turn on the main circuit power.
	Check if a servo alarm or warning is occurring.	A servo alarm occurred.	Check the alarm content and remove its cause.
	Check the on/off states of servo-on and reset.	Servo-on is off.	Turn on servo-on.
		Reset is on.	Turn off reset.
	Check the setting of parameter No.PA01 (control mode).	The setting of parameter No.PA01 (control mode) is incorrect.	Review the setting of parameter No.PA01 (control mode).
	Check if the generated torque exceeds the torque limit value. 1. Check the "Instantaneous torque" in the status display. 2. Check the torque ripple with "Graph" command of "Monitor" menu on MR Configurator.	1. The maximum torque is insufficient. Servo capacity is short, or load is too large.	1. Reduce the load by changing the mass and shape of work. 2. Reduce the effective load ratio by increasing acceleration/deceleration time.
		2. An unintended torque limit is enabled. Or the setting of torque limit is 0 (Not generating torque). (Set with parameter No.PA11, PA12, PC35)	Review the torque limit setting.
	Check the point table setting.	The setting of point tables is incorrect.	Review the point table setting.
	Check if a machine part is interfering.	A machine part is interfering.	Remove the interference of the machine part.
	For a servo motor with an electromagnetic brake, check the power supply of the electromagnetic brake.	The electromagnetic brake has not been released.	Turn on the power of electromagnetic brake to release the brake.
	Check the electronic gear setting.	The setting of the electronic gear is incorrect.	Set a proper value of the electronic gear.

Description	Check method	Possible cause	Action
The servo motor does not operate.	When using a manual pulse generator, check the wiring and the assignment of command pulse multiplication setting (input signals MD0, TP0, TP1) and parameter No.PA05).	Wiring or the command pulse multiplication setting is incorrect.	Review the wiring or the command pulse multiplication setting.
		Between DICOM and OPC of the CN6 connector in the servo amplifier is not connected.	Connect between DICOM and OPC.
The speed of the servo motor is not increased. Or the speed is increased too much.	Check the settings of the speed command and electronic gear.	The settings of the speed command and electronic gear are incorrect.	Review the settings of the speed command and electronic gear.
	Check the servo motor power cable.	Output circuit is in open phase.	Review the wiring of the servo motor power cable.
	Check if the voltage of the main circuit power supply dropped.	The voltage of the main circuit power supply has dropped.	1. Set the main circuit power supply within the permissible voltage fluctuation range of specifications. 2. Review the wiring of the main circuit power supply.
	For a servo motor with an electromagnetic brake, check the power supply of the electromagnetic brake.	The electromagnetic brake has not been released.	Turn on the power of electromagnetic brake to release the brake.
The servo motor vibrates with low frequency	If the servo motor can be driven safely, repeat acceleration and deceleration three times or more to complete auto tuning.	Failed to estimate the load to motor inertia ratio by auto tuning. When the auto tuning mode 2 or the manual mode is used, the setting of load to motor inertia ratio (Parameter No.PB06) is incorrect.	Adjust gains. (Refer to chapter 9.) When the auto tuning mode 2 or the manual mode is used, review the setting of load to motor inertia ratio (Parameter No.PB06).
	Check the command from the controller.	The command from the controller is unstable.	1. Review the command from the controller. 2. Check if the cable for a command has any failure, such as a disconnection.
	Check if the mechanical part is malfunctioning. (Example) 1. If the timing belt is loose. 2. If it has abrasion.	Load of the mechanical part has changed.	1. Readjust the gain. (Refer to chapter 9.) 2. Maintain the mechanical part.
	Check if the required torque of the machine exceeds the maximum torque of the servo motor.	Torque during acceleration/deceleration is overshooting exceeding the limit of the servo motor when the motor stops.	Reduce the load ratio by increasing acceleration/deceleration time or decreasing the mass of work, etc.
	Increase the auto tuning response (parameter No.PA09). (Except for the manual mode)	1. The servo gain is low. 2. The auto tuning response is low.	Increase the auto tuning response, and readjust the gain. (Refer to chapter 9.)

Description	Check method	Possible cause	Action
An unusual noise is occurring at the servo motor	1. If the servo motor can be driven safely, repeat acceleration and deceleration three times or more to complete auto tuning. 2. Reduce the auto tuning response. (Parameter No.PA09). (Except for the manual mode)	1. The servo gain is high. 2. The auto tuning response is high.	Reduce the auto tuning response, and readjust the gain. (Refer to chapter 9.)
	If the servo motor can be driven safely, remove the load, and check for a noise only on the servo motor.	If there is noise, the bearing is at the end of its life.	Change the servo motor.
		The backlash of the machine part is increasing if there is no unusual noise.	Maintain the machine.
	For a servo motor with an electromagnetic brake, check the dragging of the brake.	1. The sequence of releasing the electromagnetic brake is incorrect. 2. The power supply for the electromagnetic brake is malfunctioning.	1. Review the sequence of releasing the electromagnetic brake. 2. Check the power supply for the electromagnetic brake.
	The brake rattles when using a servo motor with an electromagnetic brake.	The noise is due to a gap between the connections of brake, not a fault.	

Description	Check method	Possible cause	Action
The servo motor vibrates.	1. If the servo motor can be driven safely, repeat acceleration and deceleration three times or more to complete auto tuning. 2. Reduce the auto tuning response (parameter No.PA09). (Except for the manual mode)	1. The servo gain is too high. 2. The auto tuning response is too high.	Reduce the auto tuning response, and readjust the gain. (Refer to chapter 9).
	If the servo motor can be driven safely, execute the adaptive tuning.	The machine is vibrating (resonating).	Adjust the machine resonance suppression filter. (Refer to section 10.3.)
	If the servo motor can be driven safely, execute tuning with the advanced gain search on MR Configurator, MRZJW3-SETUP 221E (C2 or later).	The machine is vibrating (resonating).	Adjust gains. (Refer to chapter 9.)
	If the servo motor can be driven safely, execute tuning with the advanced vibration suppression control.	The load side is vibrating.	Execute the filter adjustment. (Refer to section 10.4.)
	Display the cumulative feedback pulses in "high speed monitor" command of "monitor" menu on MR Configurator, and check if its numerical value is skipping.	Feedback pulses are being miscounted due to superimposed noise in the encoder cable.	Take countermeasures against noise by laying the encoder cable apart from power cables, etc.
	Check if there is a backlash on the machine part.	There is a backlash between the servo motor and the machine (such as a gear and coupling).	Adjust the backlash on the coupling and the machine part.
	Check the mounting part of the servo motor.	The rigidity of the servo motor mounting part is low.	Increase the rigidity of the mounting part by methods, such as increasing the board thickness and reinforcing the part with ribs.
	Check the servo motor power cable.	The output circuit is in open phase.	Review the wiring of servo motor power cable.
	Check if the vibration varies according to the speed.	An unbalanced torque on machine side is large.	Adjust the balance of the machine side.
	Check the mounting accuracy of the servo motor and machine.	The eccentricity due to a core gap is large.	Review the direct accuracy.
	Check the load for the shaft of the servo motor.	The load for the shaft of the servo motor is large.	Adjust the load for the shaft to within the specifications of the servo motor. For the shaft permissible load, refer to Servo Motor Instruction Manual (Vol.2).
	Check the vibration from outside.	An external vibration propagated to the servo motor.	Prevent the vibration from the external vibration source.

Description	Check method	Possible cause	Action
The rotation accuracy is low. (The rotation speed is instable.)	1. If the servo motor can be driven safely, repeat acceleration and deceleration three times or more to complete auto tuning. 2. Increase the auto tuning response. (Parameter No.PA09). (Except for the manual mode)	1. The servo gain is low. 2. The auto tuning response is low.	Increase the auto tuning response, and readjust the gain. (Refer to chapter 9.)
	Check if limiting torque (TLC) is on . 1. Check with the external I/O signal display in the diagnostic mode. 2. Check with "Input/output I/F Display" command of "Monitor" menu on MR Configurator.	An unintended torque limit is enabled. (When the torque limit is enabled, limiting torque (TLC) is on.)	Cancel the torque limit.
	Check if the maximum torque exceeds the torque limit value. 1. Check the "instantaneous torque" in the status display. 2. Check the torque ripple with “Graph” command of "Monitor" menu on MR Configurator .	The maximum torque is insufficient. 1. Shortage of servo capacity. 2. Too large load.	1. Reduce the load by changing the mass and shape of the workpiece. 2. Reduce the effective load ratio by increasing acceleration/deceleration time.
		The setting of the torque limit is incorrect. (Set with parameter No.PA11, PA12, PC35)	Review the torque limit setting.
Unsteady vibration at a stop.	1. If the servo motor can be driven safely, repeat acceleration and deceleration three times or more to complete auto tuning. 2. Increase auto tuning response (Parameter No.PA09). (Except for the manual mode)	1. The servo gain is low. 2. The auto tuning response is low.	Increase the auto tuning response, and readjust the gain. (Refer to chapter 9.)
The servo motor starts rotating upon the power-on of the servo amplifier/the servo motor starts rotating upon servo-on.	Check if servo-on is on.	Servo-on has been on at power-on.	Review the controller programs.
	For a servo motor with an electromagnetic brake, check the timing of releasing the electromagnetic brake.	1. The sequence of releasing the electromagnetic brake is incorrect. 2. The power supply for the electromagnetic brake is malfunctioning.	1. Review the sequence of releasing the electromagnetic brake. 2. Check the power supply for the electromagnetic brake.
	Check the servo motor power cable.	The output circuit is in open phase.	Review the wiring of the servo motor power cable.
The position deviates at the home position return.	A fixed amount (in one revolution) deviates. (Dog type home position return)	Detection of a zero pulse is near dog off position. (Dog type home position return)	Adjust the installation of the proximity dog switch.
	Check the in-position range (Parameter No.PA10).	The in-position range is too large.	Set a narrower in-position range.
	Check if the proximity dog signal is inputted correctly.	1. The proximity dog switch is faulty. 2. The installation of the proximity dog is faulty.	1. Repair or replace the proximity dog switch. 2. Adjust the installation of the proximity dog switch.

Description	Check method	Possible cause	Action
The position deviates at the home position return.	Check the installation of the proximity dog switch.	The position of the proximity dog is deviated, or installation of the proximity dog is faulty.	Adjust the installation of the proximity dog switch.
	Check the controller programs.	The controller programs are incorrect.	Review the controller programs.
The position deviates during operation after the home position return.	Check the servo alarm or warning.	1. A servo alarm occurred. 2. The servo motor coasts due to servo alarm.	Check the alarm content, and remove its cause.
	The command position and urrent position do not match.	Forward rotation stroke end (LSP) or reverse rotation stroke end (LSN) was turned off. (A99 occurred).	Review the wiring of forward rotation stroke end (LSP) and reverse rotation stroke end (LSN).
	"Cumulative feedback pulses × feed length multiplication" does not match the actual machine position.	1. A mechanical slip occurred. 2. The backlash of the machine part is large.	Adjust the machine part.
	Cumulative feedback pulses does not match "Cumulative command pulses × electronic gear setting" value.	The power line was disconnected temporarily.	Review the wiring.
		1. The servo gain is low. 2. The auto tuning response is low. 3. Settling time is delayed.	Increase the auto tuning response, and readjust the gain. (Refer to chapter 9.)
		1.Forward rotation stroke end (LSP) or reverse rotation stroke end (LSN) was turned off. (A99 occurred) 2. Clear (CR) and reset (RES) were turned ON.	1. Review the wiring and sequence of each signal. 2. Review the controller programs. 3. If a malfunction may occur due to loud noise, increase the input filter setting (parameter No.PD19).
	1. If the servo motor can be driven safely, repeat acceleration and deceleration three times or more to complete auto tuning. 2. Increase the auto tuning response (parameter No.PA09). (Except for the manual mode)	The auto tuning response is low.	Increase the auto tuning response, and readjust the gain. (Refer to chapter 9.)
	For the geared servo motor, check the setting of the electronic gear (parameter No.PA06, PA07).	The reduction ratio is not calculated correctly.	Review the setting of the reduction ratio.
	Check the point table setting, selection, start timing, etc.	The setting of point tables and start timing is incorrect.	1. Review the point table setting. 2. Review the controller programs.

Description	Check method	Possible cause	Action
The position deviates during operation after the home position return.	The input value from the manual pulse generator MR-HDP01 and the command position (mm) do not match.	Wiring or multiplication setting (parameter No.PA05, manual pulse generator multiplication 1 (TP1) and manual pulse generator multiplication 2 (TP2)) of the manual pulse generator is incorrect.	1. Check the wiring. 2. Check if multiplication setting is set correctly.
		1. Command input pulses are miscounted by noises. 2. Shielding the command cable is faulty. 3. The command cable has a contact failure or disconnected.	Check the shield procedure of the command cable.
	The command from the controller and the command position of the amplifier do not match.	Communication command error. (An unintended command is inputted).	Review the controller programs and protocol. (Refer to chapter 3.)
	Check the in-position range (parameter No.PA10).	The in-position range is too large.	Set a narrower in-position range.
In absolute position detection system, a restored position deviates at power restoration.	For the geared servo motor, check the setting of the electronic gear (parameter No.PA06, PA07).	The reduction ratio is not calculated correctly.	Review the setting of the reduction ratio.
	For positioning operation after the home position return, the position mismatch does not occur.	The maximum speed (3000r/min) at a power failure was exceeded during servo amplifier power-off.	Review the machine configuration so that the servo motor will not rotate at speed of 3000r/min or higher during power-off.
Overshoot/ undershoot occurs.	1. Check the velocity waveform with “Graph” command of "Monitor" menu on MR Configurator, and check if overshoot/undershoot is occurring. 2. If the servo motor can be driven safely, repeat acceleration and deceleration three times or more to complete auto tuning.	1. The servo gain is low or too high. 2. The auto tuning response is low or too high.	Adjust the auto tuning response, and readjust the gain. (Refer to chapter 9.)
	Check if the maximum torque exceeds the torque limit value. 1. Check the "instantaneous torque" in the status display. 2. Check the torque ripple with “Graph” command of "Monitor" menu on MR Configurator.	The maximum torque is insufficient. 1. Shortage of servo capacity. 2. Too large load.	1. Reduce the load by changing the mass and shape of work. 2. Reduce the effective load ratio by increasing acceleration/deceleration time.
		The setting of the torque limit is incorrect. (Set with parameter No.PA11/PA12/PC35)	Review the torque limit setting.
	Check if there is a backlash on the machine part.	There is a backlash between the servo motor and the machine (such as a gear and coupling).	Adjust the backlash on the coupling and the machine part.

Description	Check method	Possible cause	Action
Communication with the servo amplifier fails using MR Configurator.	Check if they are on-line.	They are off-line.	Set them to on-line. Select "On-line" in the "System setting" of "Set up" menu.
	Check if the communication cable has any failure such as damage.	Communication cable fault.	Change the communication cable.
	Check the communication settings (Baud rate and ports). Check with the "system setting" command of "Set up" menu.	The communication setting is incorrect.	Set the communication correctly.
	Check if the model selection is set correctly. Check with "system setting" command of "Set up" menu	The model being connected differs from the model set in the model selection.	Set the model correctly.
	In the device manager on the personal computer, check if "MITSUBISHI MELSERVO USB Controller" is being displayed under the USB (Universal Serial Bus) controller.	The driver is not set.	Delete an unknown device or other devices, cycle the power of the servo amplifier, and then set the driver again according to Found New Hardware Wizard. For details refer to Help of MR Configurator.
An abnormal value is displayed in the monitor values of MR Configurator.	Check if the model selection is set correctly. Check with the "system setting" command of "Setup" menu.	The model being connected differs from the model set in the model selection.	Set the model correctly.
For a servo motor with an electromagnetic brake, the brake went out.	Remove the servo motor and all the wiring from the machine, and check if the servo motor shaft can be rotated by the hands. (If it is rotated by the hands, the electromagnetic brake has a failure.)	Expiration of life or a failure of electromagnetic brake. For the life of electromagnetic brake, refer to Servo Motor Instruction Manual (Vol.2).	Change the servo motor.
The coasting distance of the servo motor became longer.	Check if the load was increased.	The load was increased and the permissible load to motor inertia ratio of the dynamic brake was exceeded.(Refer to section 13.3.)	1. Reduce the load. 2. Replace the servo amplifier.
	For the servo motor with an electromagnetic brake. 1. Check if the external relay connected to electromagnetic brake interlock (MBR) operates normally. 2. Check if the electromagnetic brake is malfunctioning.	1. An external relay is malfunctioning. 2. The wiring of electromagnetic brake interlock (MBR) is incorrect. 3. Expiration of life or a failure of electromagnetic brake.	1. Replace the external relay. 2. Review the wiring. 3. Change the servo motor.

MEMO

12. OUTLINE DRAWINGS

12.1 Servo amplifier

(1) MR-J3-10T・MR-J3-20T
MR-J3-10T1・MR-J3-20T1

[Unit: mm]

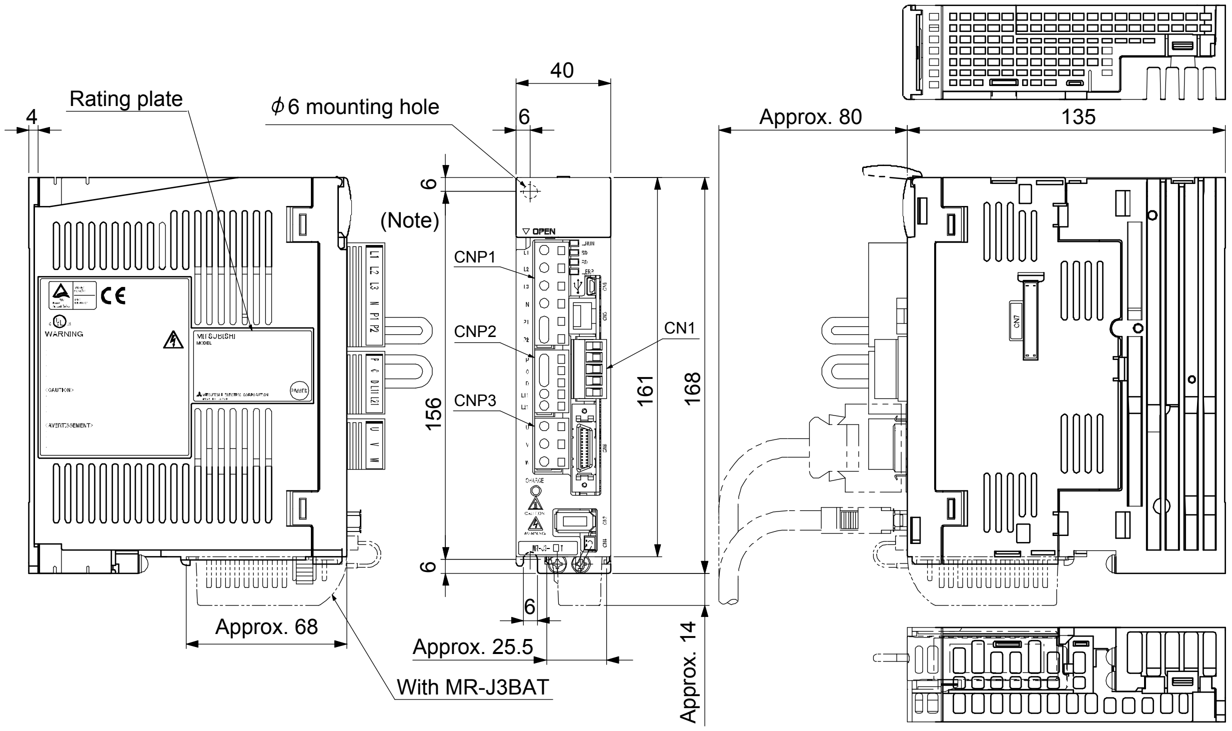

Mass: 0.8 [kg]

Note. This data applies to the 3-phase or 1-phase 200 to 230VAC power supply models.
For a single-phase, 100 to 120VAC power supply, refer to the terminal signal layout.

Terminal signal layout

	For 1-phase 100 to 120VAC	For 3-phase or 1-phase 200 to 230VAC
CNP1	L_1	L_1
		L_2
	L_2	L_3
	N	N
	P_1	P_1
	P_2	P_2
CNP2	P	P
	C	C
	D	D
	L_{11}	L_{11}
	L_{21}	L_{21}
CNP3	U	U
	V	V
	W	W

PE terminal

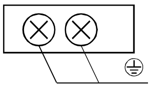

Screw size: M4
Tightening torque: 1.2 [N・m] (10.6 [lb・in])

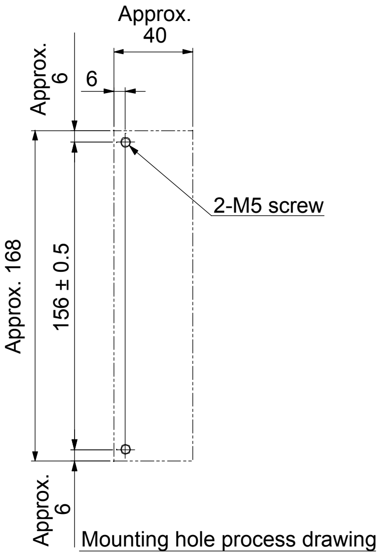

Mounting hole process drawing

Mounting screw
Screw size: M5
Tightening torque: 3.24[N・m]

(2) MR-J3-40T · MR-J3-60T
MR-J3-40T1

[Unit: mm]

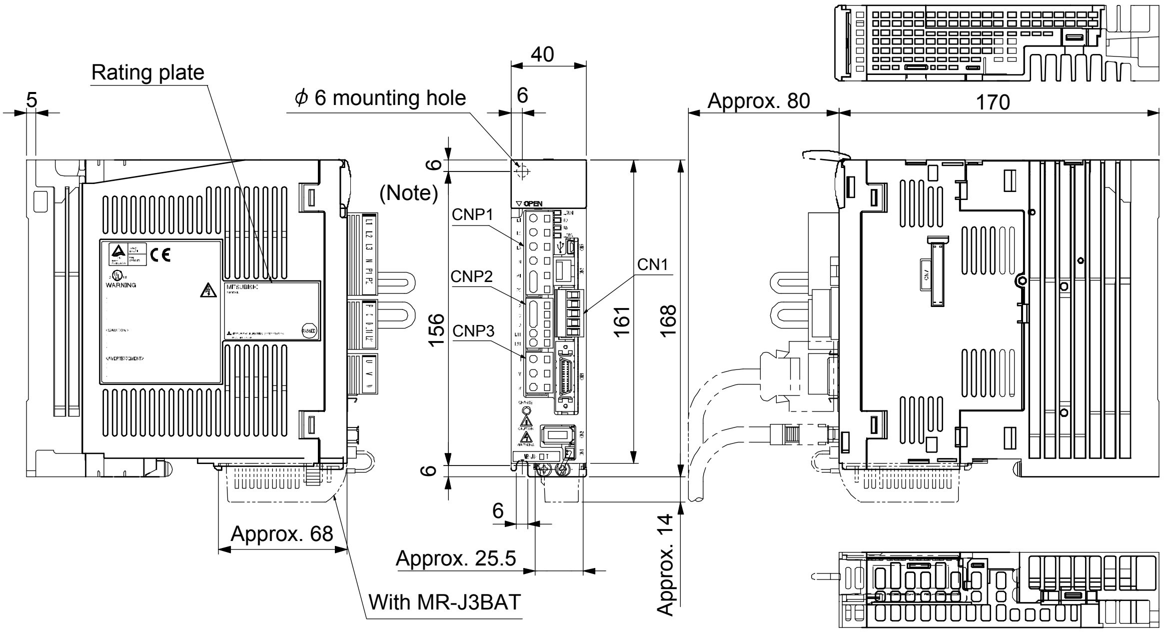

Mass: 1.0 [kg]

Note. This data applies to the 3-phase or 1-phase 200 to 230VAC power supply models.
For a single-phase, 100 to 120VAC power supply, refer to the terminal signal layout.

Terminal signal layout

For 1-phase 100 to 120VAC

CNP1	L_1
	L_2
	N
	P_1
	P_2
CNP2	P
	C
	D
	L_{11}
	L_{21}
CNP3	U
	V
	W

For 3-phase or 1-phase 200 to 230VAC

CNP1	L_1
	L_2
	L_3
	N
	P_1
	P_2
CNP2	P
	C
	D
	L_{11}
	L_{21}
CNP3	U
	V
	W

PE terminal

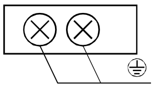

Screw size: M4
Tightening torque: 1.2 [N・m] (10.6 [lb・in])

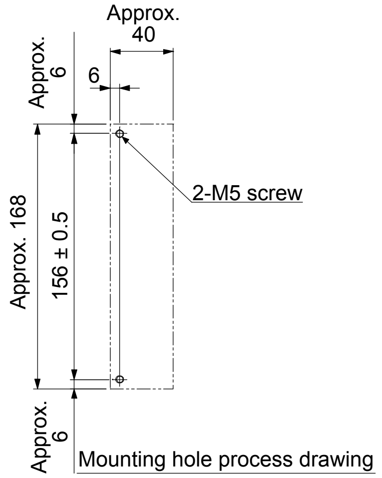

Mounting hole process drawing

Mounting screw
Screw size: M5
Tightening torque: 3.24[N・m]

(3) MR-J3-70T・MR-J3-100T

[Unit: mm]

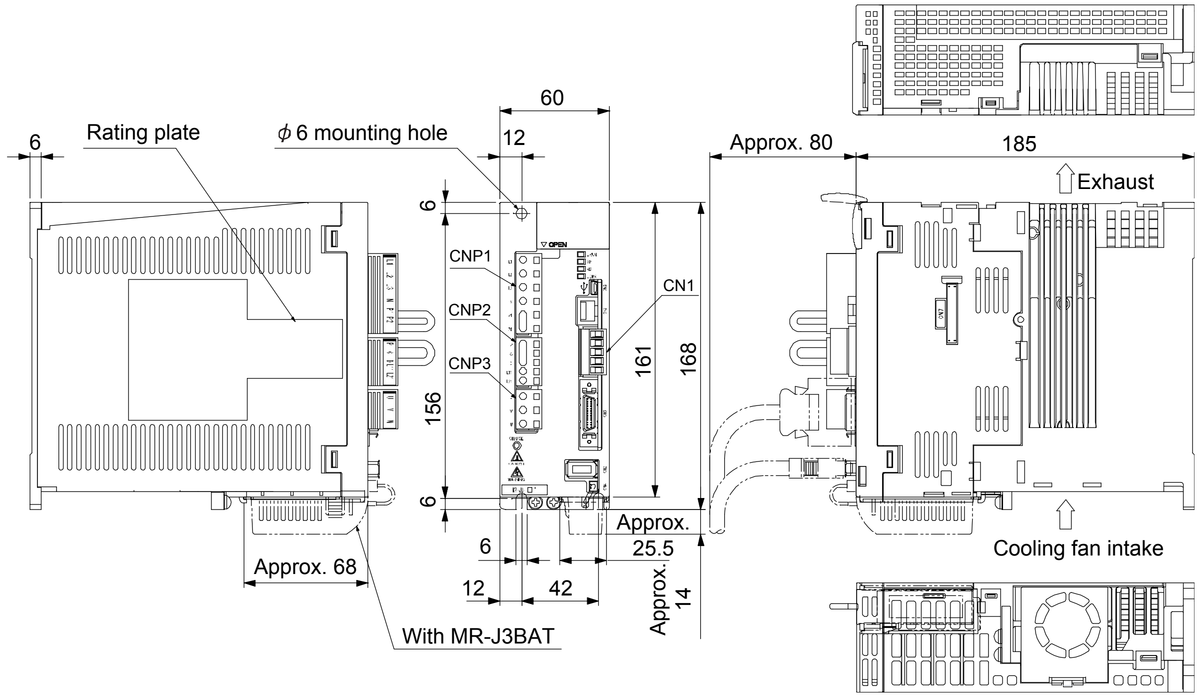

Mass: 1.4 [kg]

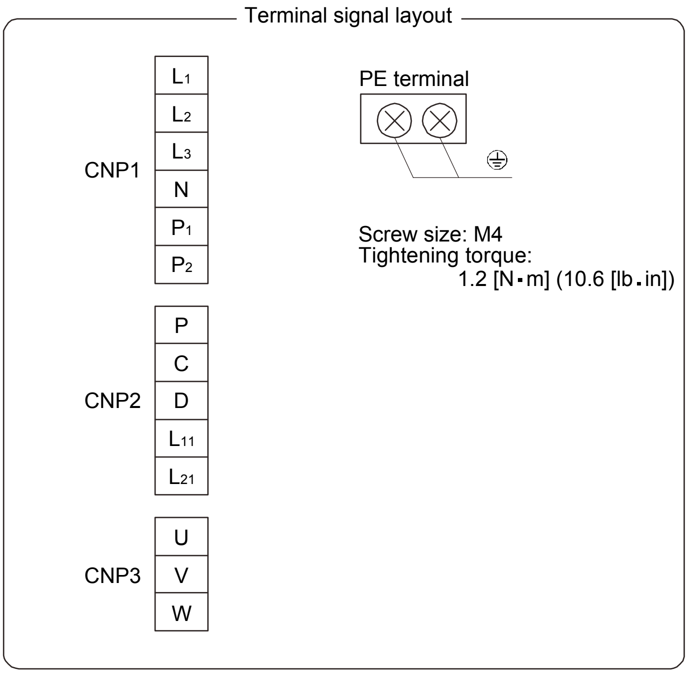

Screw size: M4
Tightening torque:
1.2 [N・m] (10.6 [lb.in])

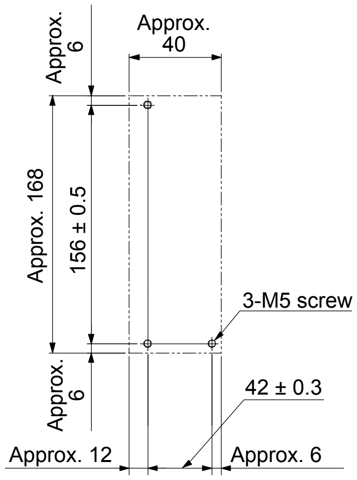

Mounting hole process drawing

Mounting screw
Screw size: M5
Tightening torque: 3.24[N・m]

(4) MR-J3-60T4 ・ MR-J3-100T4

[Unit: mm]

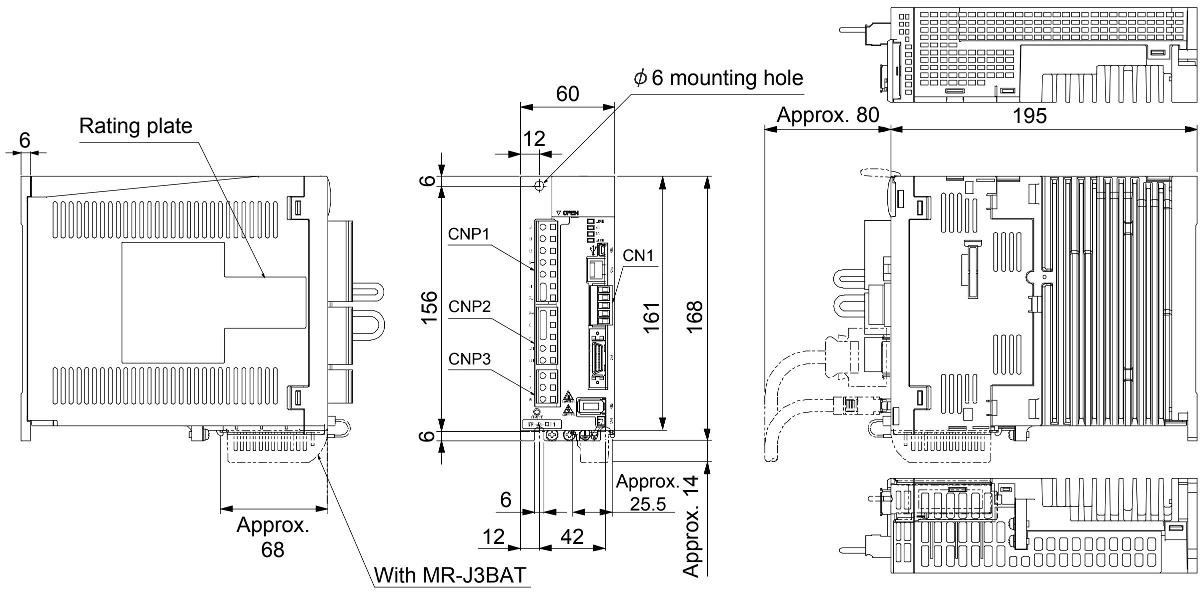

Mass: 1.4 [kg]

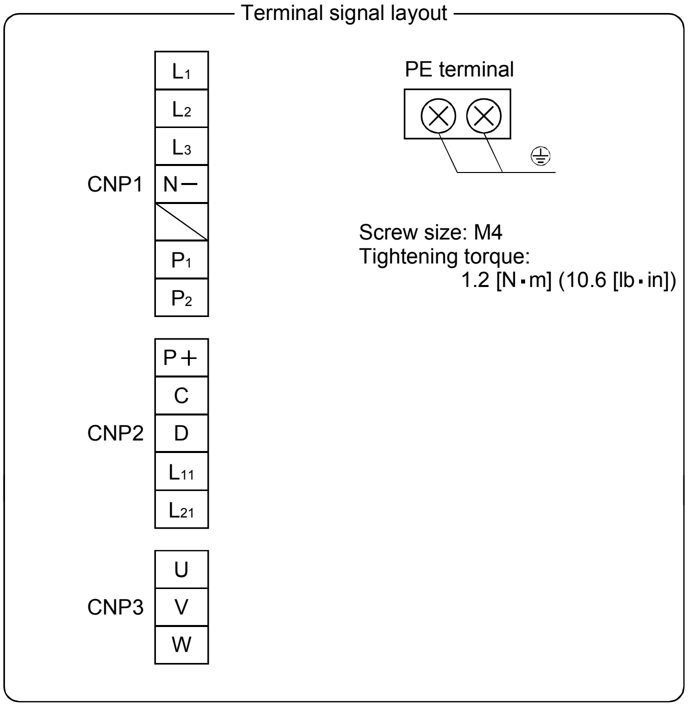

Screw size: M4
Tightening torque:
1.2 [N・m] (10.6 [lb・in])

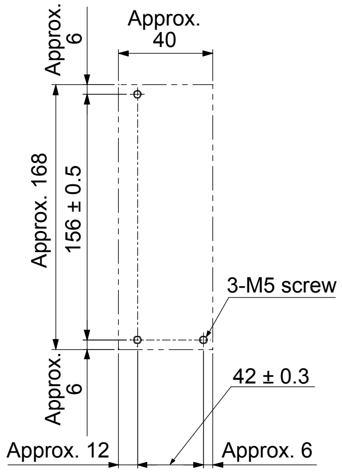

Mounting hole process drawing

Mounting screw
Screw size: M5
Tightening torque: 3.24[N・m]

(5) MR-J3-200TN・MR-J3-200T4

POINT

- Connectors (CNP1, CNP2, and CNP3) and appearance of MR-J3-200T servo amplifier have been changed from January 2008 production. Model name of the existing servo amplifier is changed to MR-J3-200T-RT. For MR-J3-200T-RT, refer to appendix 5.

[Unit: mm]

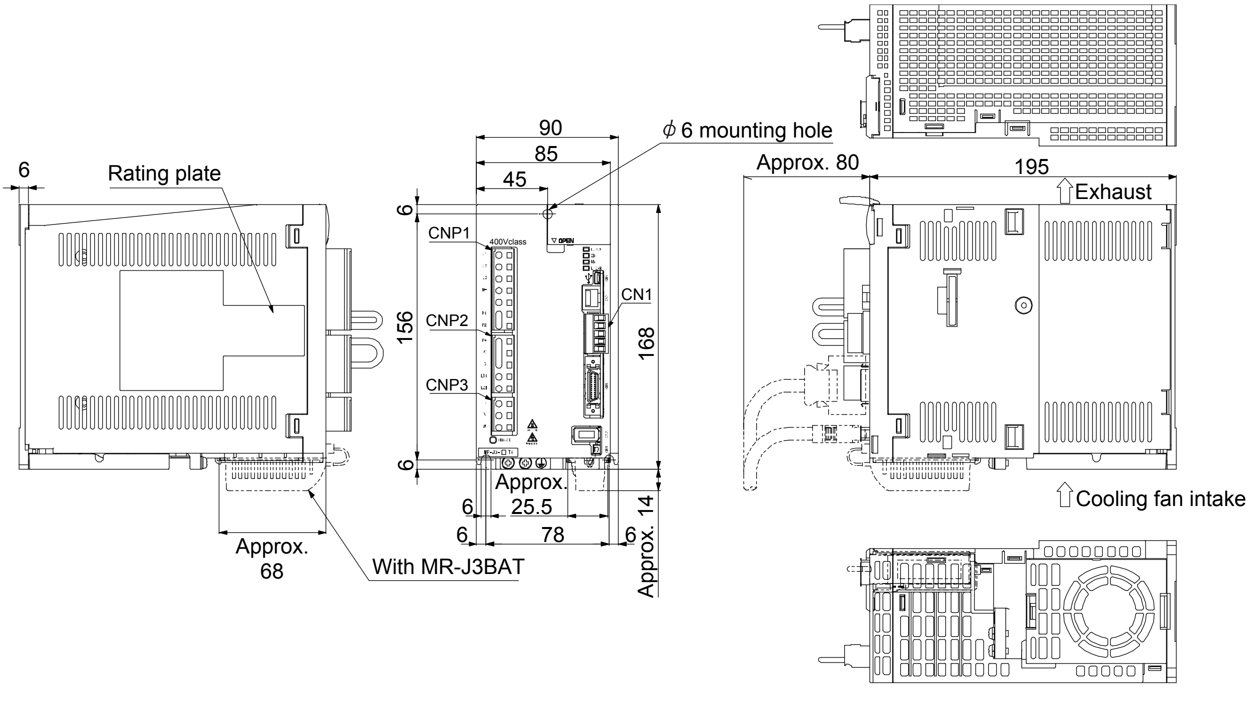

Mass: 2.1 [kg]

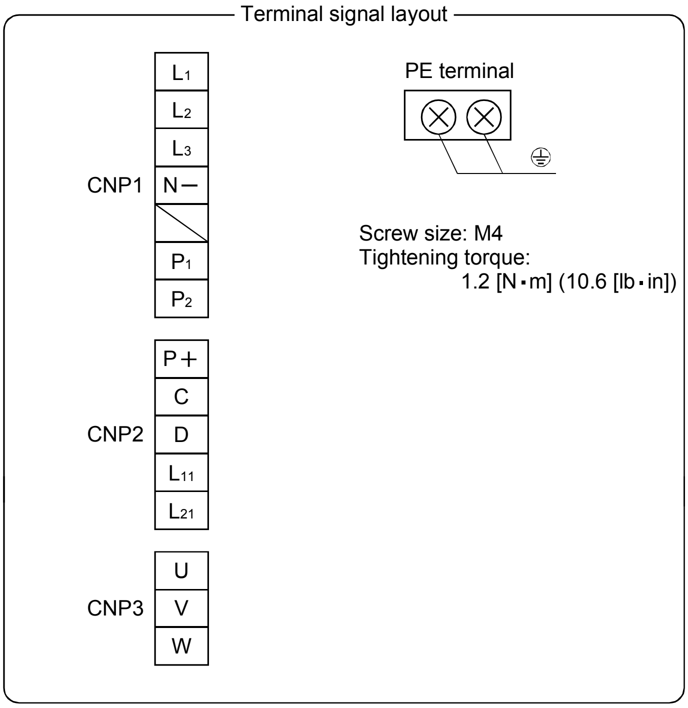

Screw size: M4
Tightening torque:
1.2 [N・m] (10.6 [lb・in])

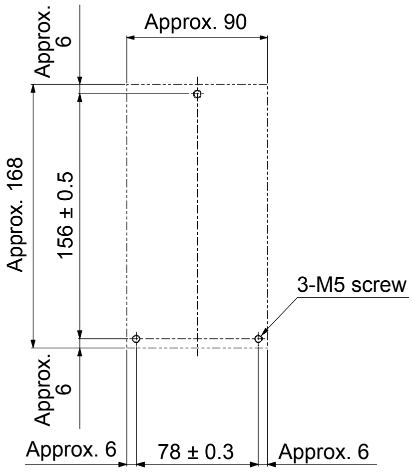

Mounting hole process drawing

Mounting screw
Screw size: M5
Tightening torque: 3.24[N・ m]

(6) MR-J3-350T

[Unit: mm]

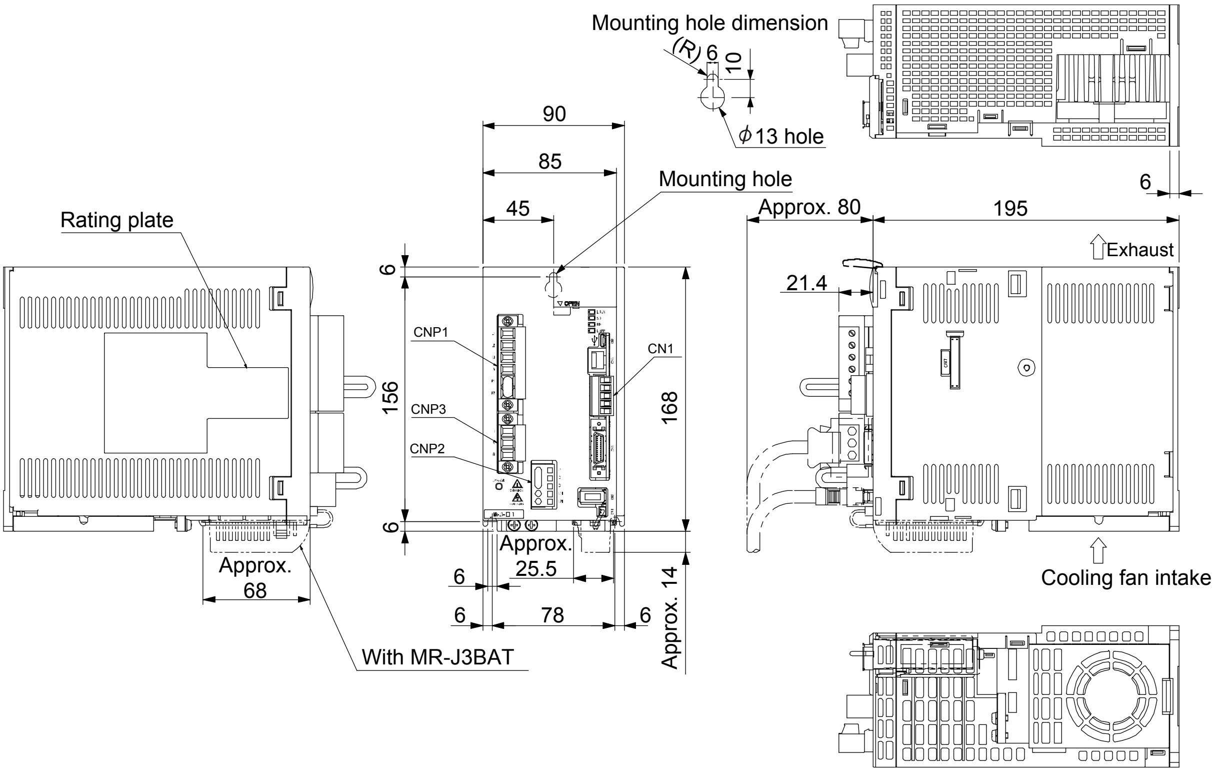

Mass: 2.3[kg]

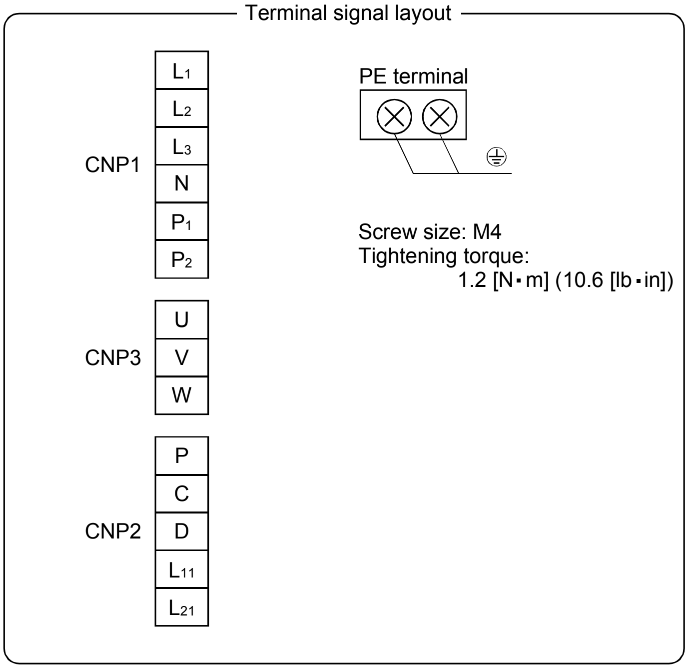

Screw size: M4
Tightening torque:
1.2 [N•m] (10.6 [lb•in])

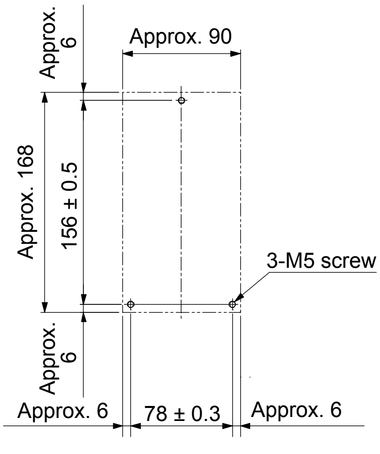

Mounting hole process drawing

Mounting screw
Screw size: M5
Tightening torque: 3.24[N• m]

(7) MR-J3-350T4・MR-J3-500T(4)

[Unit: mm]

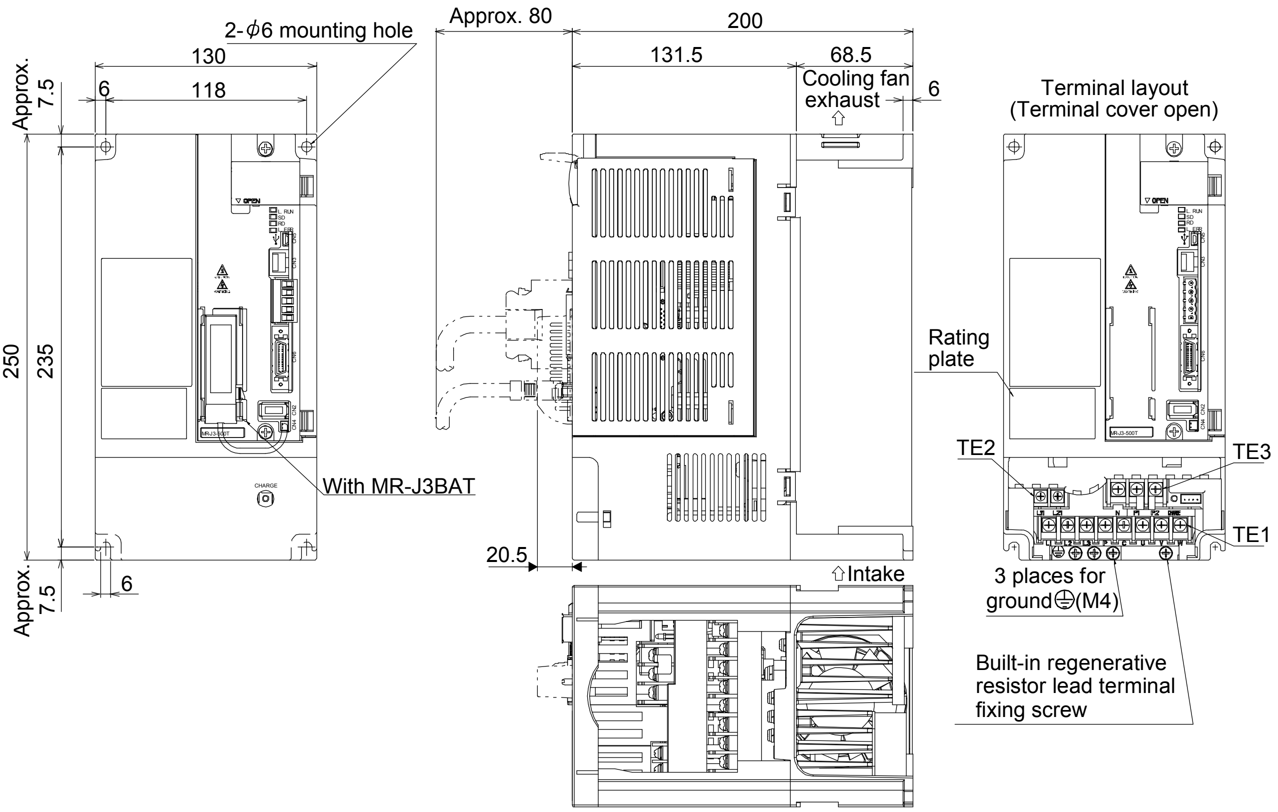

Mass: 4.6 [kg]

Terminal signal layout

TE1

L_1	L_2	L_3	P	C	U	V	W

Terminal screw: M4
Tightening torque: 1.2[N・m]
(10.6 [lb・in])

TE2

L_{11}	L_{21}

Terminal screw: M3.5(Note)
Tightening torque: 0.8[N・m]
(7.08 [lb・in])

TE3

N	P_1	P_2

Terminal screw: M4
Tightening torque: 1.2[N・m]
(10.6 [lb・in])

PE terminal

⊕ ⊕ ⊕ ⊕

⏚

Built-in regenerative resistor lead terminal fixing screw

Terminal screw: M4
Tightening torque: 1.2[N・m]
(10.6 [lb・in])

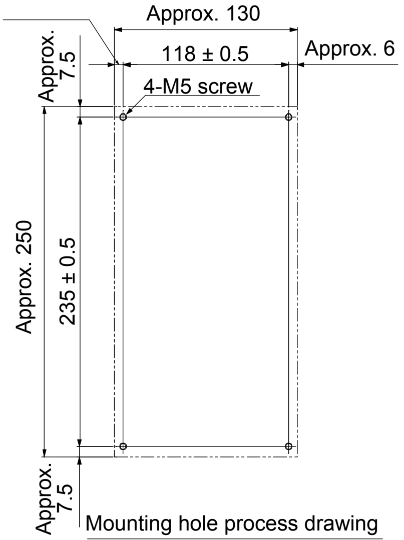

Mounting hole process drawing

Note. Screw size is M3.5 for the control circuit terminal block (TE2) of the servo amplifier manufactured in April 2007 or later. Screw size is M3 for the control terminal block (TE2) of the servo amplifier manufactured in March 2007 or earlier.

Mounting screw
Screw size: M5
Tightening torque: 3.24[N・m]

(8) MR-J3-700T(4)

[Unit: mm]

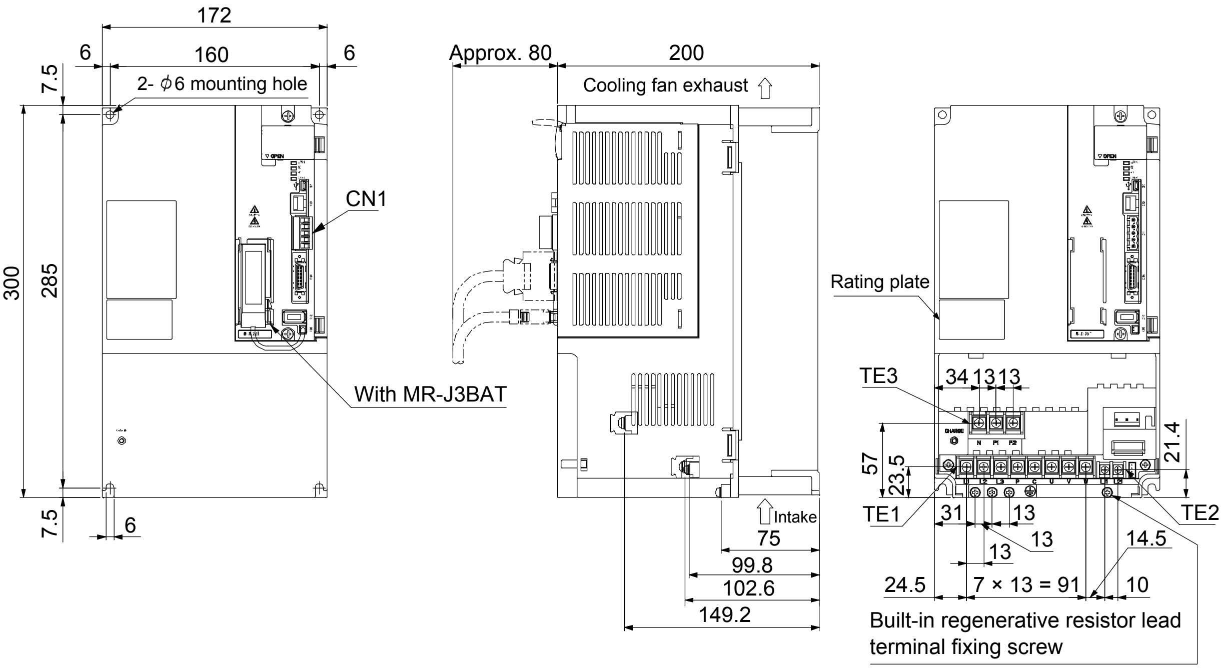

Mass: 6.2 [kg]

Terminal signal layout

TE1

L_1	L_2	L_3	P	C	U	V	W

Terminal screw: M4
Tightening torque: 1.2[N▪m]
(10.6 [lb▪in])

TE2

L_{11}	L_{21}

Terminal screw: M3.5(Note)
Tightening torque: 0.8[N▪m]
(7.08 [lb▪in])

TE3

N	P_1	P_2

Terminal screw: M4
Tightening torque: 1.2[N▪m]
(10.6 [lb▪in])

PE terminal

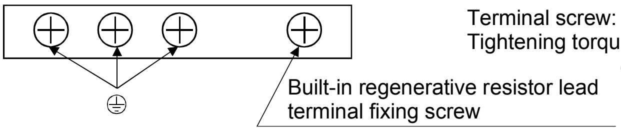

Terminal screw: M4
Tightening torque: 1.2[N▪m]
(10.6 [lb▪in])

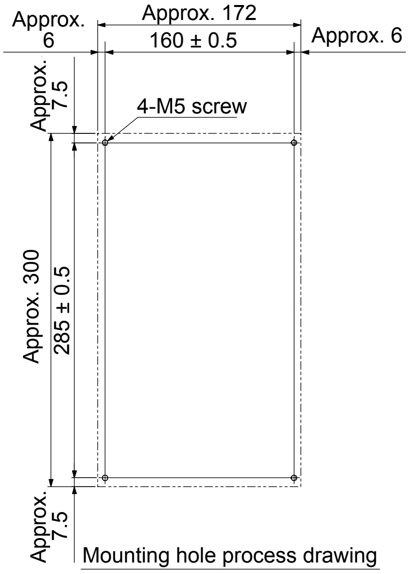

Mounting hole process drawing

Note. Screw size is M3.5 for the control circuit terminal block (TE2) of the servo amplifier manufactured in April 2007 or later. Screw size is M3 for the control terminal block (TE2) of the servo amplifier manufactured in March 2007 or earlier.

Mounting screw
Screw size: M5
Tightening torque: 3.24[N▪ m]

(9) MR-J3-11KT(4) to 22KT(4)

[Unit: mm]

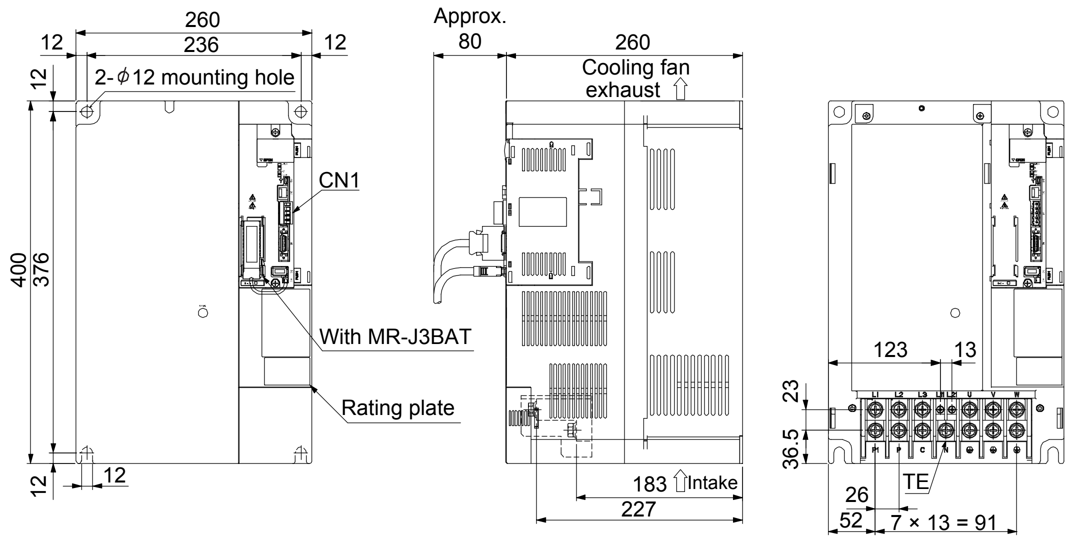

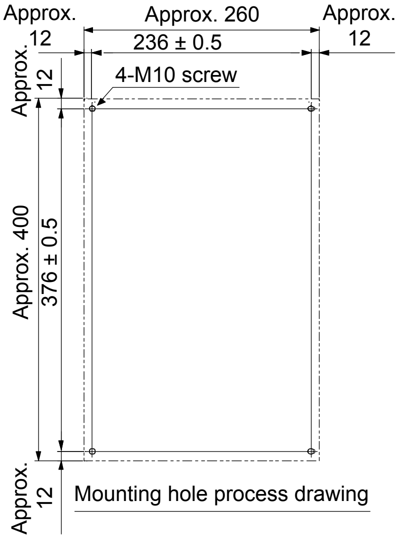

Mounting hole process drawing

Servo amplifier	Mass[kg]
MR-J3-11KT	18.0
MR-J3-15KT	18.0
MR-J3-22KT	19.0

Terminal signal layout

L_1	L_2	L_3	L_{11} L_{21}	U	V	W
P_1	P	C	N	⏚	⏚	⏚

		L_1・L_2・L_3・U・V・W・P_1・P・C・N・⏚	L_{11}・L_{21}
MR-J3-11KT(4) MR-J3-15KT(4)	Screw size	M6	M4
	Tightening torque [(lb:in)][N・m]	3.0	1.2
MR-J3-22KT(4)	Screw size	M8	M4
	Tightening torque [(lb:in)][N・m]	6.0	1.2

Mounting screw

Servo amplifier	Screw size	Tightening torque [N・m]([lb・in])
MR-J3-11KT(4) MR-J3-15KT(4) MR-J3-22KT(4)	M10	26.5 (234.5)

12.2 Connector

(1) Miniature delta ribbon (MDR) system (3M)

(a) One-touch lock type

[Unit: mm]

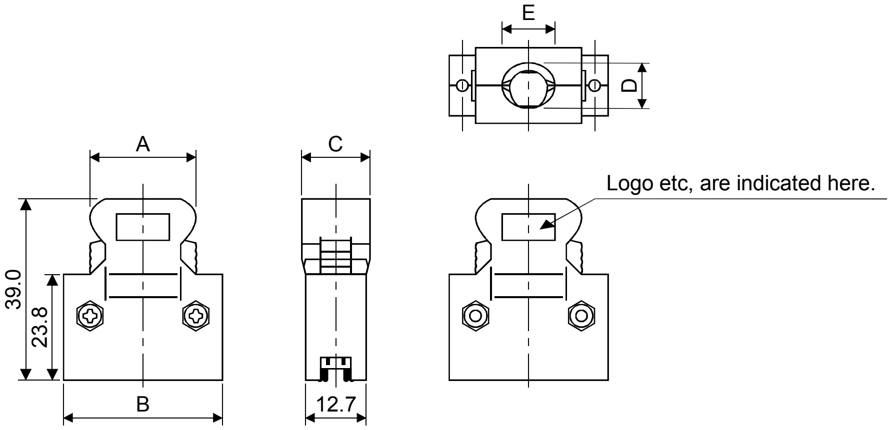

Connector	Shell kit	Each type of dimension				
		A	B	C	D	E
10150-3000PE	10350-52F0-008	41.1	52.4	18.0	14.0	17.0

(b) Jack screw M2.6 type

This is not available as option.

[Unit: mm]

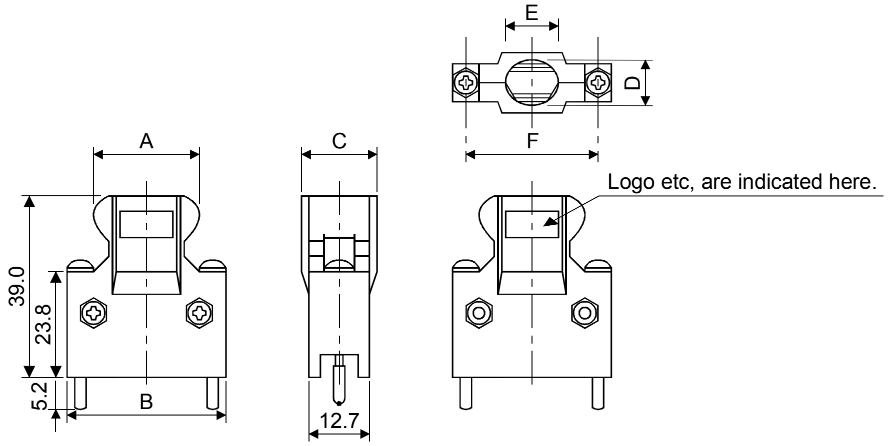

Connector	Shell kit	Each type of dimension					
		A	B	C	D	E	F
10150-3000PE	10350-52A0-008	41.1	52.4	18.0	14.0	17.0	46.5

(2) SCR connector system (3M)

Receptacle : 36210-0100PL
Shell kit : 36310-3200-008

[Unit: mm]

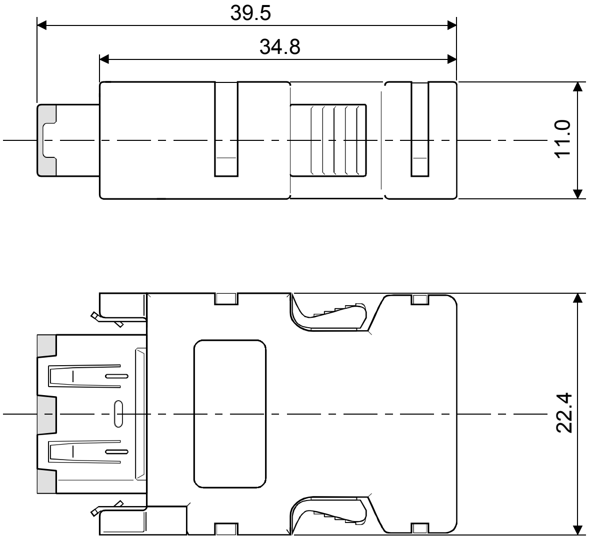

MEMO

13. CHARACTERISTICS

13.1 Overload protection characteristics

An electronic thermal is built in the servo amplifier to protect the servo motor, servo amplifier and servo motor power wires from overloads.

Overload 1 alarm (A50) occurs if overload operation performed is above the electronic thermal relay protection curve shown in any of Figs 13.1. Overload 2 alarm (A51) occurs if the maximum current flew continuously for several seconds due to machine collision, etc. Use the equipment on the left-hand side area of the continuous or broken line in the graph.

In a machine like the one for vertical lift application where unbalanced torque will be produced, it is recommended to use the machine so that the unbalanced torque is 70% or less of the rated torque. When you mount the servo amplifier closely, make ambient temperature into 0 to 45°C or use it with 75% or less of effective load torque.

The MR-J3 series servo amplifiers have the servo motor overload protective function.

(It is set on the basis (full load current) of 115% of the servo amplifier.)

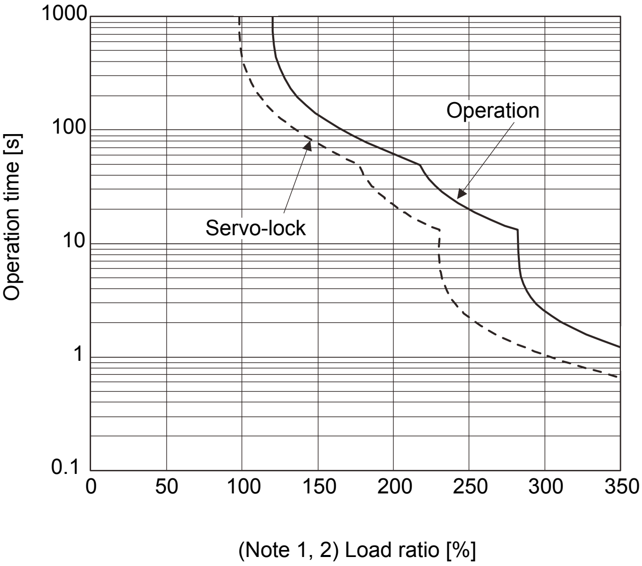

MR-J3-10T(1)

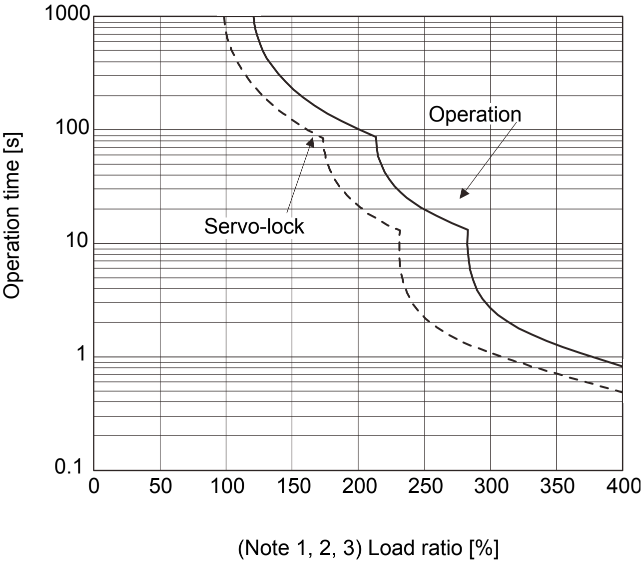

MR-J3-20T(1) to MR-J3-40T(1)
MR-J3-60T(4) to MR-J3-100T(4)

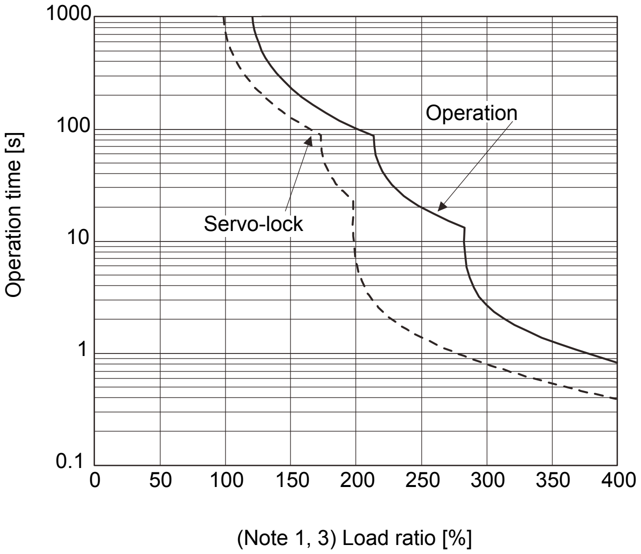

MR-J3-200TN・200T4・350T(4)

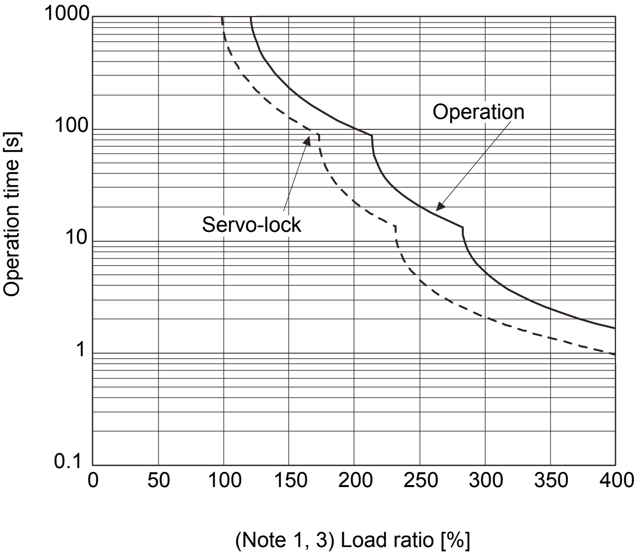

MR-J3-500T(4)・MR-J3-700T(4)

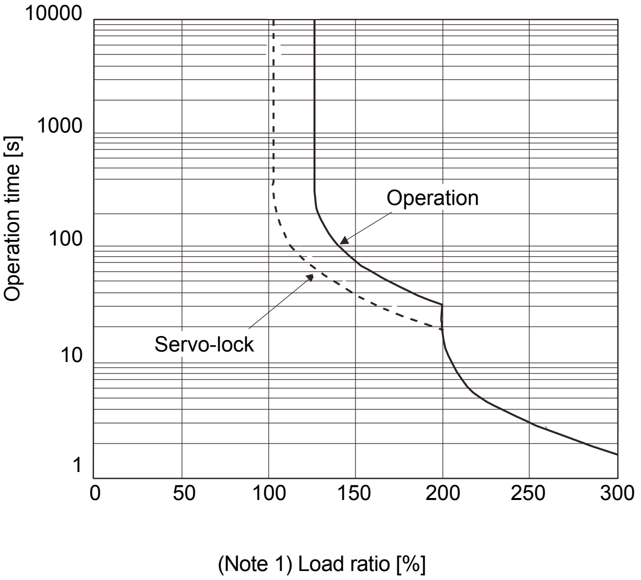

MR-J3-11KT(4)・MR-J3-22KT(4)

Note 1. If operation that generates torque more than 100% of the rating is performed with an abnormally high frequency in a servo motor stop status (servo-lock status) or in a 30 r/min or less low-speed operation status, the servo amplifier may malfunction regardless of the electronic thermal protection.

2. The load ratio ranging from 300% to 350% applies when the maximum torque of HF-KP servo motor is increased to 350%.

3. The load ratio ranging from 300% to 400% applies when the maximum torque of HF-JP servo motor is increased to 400%.

Fig 13.1 Electronic thermal relay protection characteristics

13.2 Power supply equipment capacity and generated loss

(1) Amount of heat generated by the servo amplifier

Table 13.1 indicates servo amplifiers' power supply capacities and losses generated under rated load. For thermal design of an enclosure, use the values in Table 13.1 in consideration for the worst operating conditions. The actual amount of generated heat will be intermediate between values at rated torque and servo-off according to frequency of operation. When the servo motor is run at less than the maximum speed, the power supply capacity will be smaller than the value in the table, but the servo amplifier's generated heat will not change.

Table 13.1 Power supply capacity and generated heat per servo amplifier at rated output

Servo amplifier	Servo motor	(Note 1) Power supply capacity [kVA]	(Note 2) Servo amplifier-generated heat[W]			Area required for heat dissipation [m^2]
			At rated torque	At rated output [Generated heat in the cabinet when cooled outside the cabinet] (Note 5)	With servo off	
MR-J3-10T (1)	HF-MP053	0.3	25		15	0.5
	HF-MP13	0.3	25		15	0.5
	HF-KP053 ・ 13	0.3	25		15	0.5
MR-J3-20T (1)	HF-MP23	0.5	25		15	0.5
	HF-KP23	0.5	25		15	0.5
MR-J3-40T (1)	HF-MP43	0.9	35		15	0.7
	HF-KP43	0.9	35		15	0.7
MR-J3-60T (4)	HF-SP52 (4)	1.0	40		15	0.8
	HF-SP51	1.0	40		15	0.8
	HC-LP52	1.0	40		15	0.8
	HF-JP53 (4)	1.0	40		15	0.8
MR-J3-70T	HF-MP73	1.3	50		15	1.0
	HF-KP73	1.3	50		15	1.0
	HC-UP72	1.3	50		15	1.0
	HF-JP73	1.3	50		15	1.0
MR-J3-100T (4)	HF-SP102 (4)	1.7	50		15	1.0
	HF-SP81	1.5	50		15	1.0
	HC-LP102	1.7	50		15	1.0
	HF-JP734	1.3	50		15	1.0
	HF-JP103 (4)	1.7	50		15	1.0
MR-J3-200TN ・ 200T4	HF-SP152 (4)	2.5	90		20	1.8
	HF-SP202 (4)	3.5	90		20	1.8
	HF-SP121	2.1	90		20	1.8
	HF-SP201	3.5	90		20	1.8
	HC-RP103	1.7	50		15	1.0
	HC-RP153	2.5	90		20	1.8
	HC-UP152	2.5	90		20	1.8
	HC-LP152	2.5	90		20	1.8
	HF-JP153 (4)	2.5	90		20	1.8
	HF-JP203 (4)	3.5	90		20	1.8

Servo amplifier	Servo motor	(Note 1) Power supply capacity [kVA]	(Note 2) Servo amplifier-generated heat[W]			Area required for heat dissipation [m^2]
			At rated torque	At rated output [Generated heat in the cabinet when cooled outside the cabinet] (Note 5)	With servo off	
MR-J3-350T (4)	HF-SP352 (4)	5.5	130		20 (25) (Note 3)	2.7
	HC-RP203	3.5	90		20	1.8
	HC-UP202	3.5	90		20	1.8
	HC-LP202	3.5	90		20	1.8
	HF-SP301	4.8	120		20	2.4
	HF-JP353 (4)	5.5	160		25	2.7
MR-J3-500T (4)	HF-SP502 (4)	7.5	195		25	3.9
	HC-RP353	5.5	135		25	2.7
	HC-RP503	7.5	195		25	3.9
	HC-UP352	5.5	195		25	3.9
	HC-UP502	7.5	195		25	3.9
	HC-LP302	4.8	120		25	2.4
	HA-LP502	7.5	195		25	3.9
	HF-SP421	6.3	160		25	3.2
	HF-JP503 (4)	7.5	190		25	3.9
MR-J3-700T (4)	HF-SP702 (4)	10	300		25	6.0
	HA-LP702	10	300		25	6.0
	HA-LP601 (4)	8.6	260		25	5.2
	HA-LP701M (4)	10	300		25	6.0
	HF-JP703 (4)	10	300		25	6.0
MR-J3-11KT (4)	HA-LP11K2 (4)	16	530	160	45	11.0
	HA-LP801 (4)	12	390	120	45	7.8
	HA-LP12K1 (4)	18	580	175	45	11.6
	HA-LP11K1M (4)	16	530	160	45	11.0
	HF-JP903 (4)	13	435	130	45	8.7
	HF-JP11K1M (4) (Note 4)	16	530	160	45	11.0
MR-J3-15KT (4)	HA-LP15K2 (4)	22	640	195	45	13.0
	HA-LP15K1 (4)	22	640	195	45	13.0
	HA-LP15K1M (4)	22	640	195	45	13.0
	HF-JP15K1M (4) (Note 4)	22	640	195	45	13.0
MR-J3-22KT (4)	HA-LP22K2 (4)	33	850	260	55	17.0
	HA-LP20K1 (4)	30	775	235	55	15.5
	HA-LP25K1	38	970	295	55	19.4
	HA-LP22K1M (4)	33	850	260	55	17.0

Note 1. Note that the power supply capacity will vary according to the power supply impedance. This value is applicable when the power factor improving AC reactor or power factor improving DC reactor is not used.

2. Heat generated during regeneration is not included in the servo amplifier-generated heat. To calculate heat generated by the regenerative option, refer to section 14.2.

3. For 400V class, the value is within the ( ).

4. The servo amplifiers, which support these servo motors, have "-LR" at the end of their model names.

5. This value is applicable when the servo amplifier is cooled by using the panel through attachment.

(2) Heat dissipation area for enclosed servo amplifier

The enclosed type control box (hereafter called the control box) which will contain the servo amplifier should be designed to ensure that its temperature rise is within +10℃ (+50°F) at the ambient temperature of 40℃ (104°F). (With a 5℃ (41°F) safety margin, the system should operate within a maximum 55℃ (131°F) limit.) The area required for heat dissipation can be calculated by Equation 13.1.

$$A = \frac{P}{K \cdot \Delta T} \quad \cdots\cdots (13.1)$$

where, A : Heat dissipation area [m^2]
P : Loss generated in the control box [W]
ΔT : Difference between internal and ambient temperatures [℃]
K : Heat dissipation coefficient [5 to 6]

When calculating the heat dissipation area with Equation 13.1, assume that P is the sum of all losses generated in the control box. Refer to Table 13.1 for heat generated by the servo amplifier. "A" indicates the effective area for heat dissipation, but if the control box is directly mounted on an insulated wall, that extra amount must be added to the control box's surface area.

The required heat dissipation area will vary wit the conditions in the control box. If convection in the control box is poor and heat builds up, effective heat dissipation will not be possible. Therefore, arrangement of the equipment in the control box and the use of a cooling fan should be considered.

Table 13.1 shows the area required by each servo amplifier for heat dissipation in the control box when the servo amplifier is operated at the ambient temperature of 40℃ (104°F) under rated load.

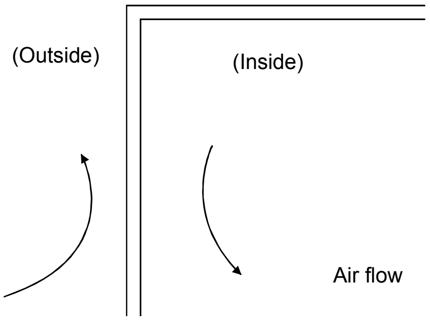

Fig. 13.2 Air flow in an enclosed type control box

When air flows along the wall inside and outside the control box, the temperature gradient will be large, and therefore the heat exchange will be more effective.

13.3 Dynamic brake characteristics

POINT

- The dynamic brake operates when an alarm or servo forced stop warning (AE6) occurs, or when the power is turned off. Do not use dynamic brake to stop in a normal operation as it is the function to stop in emergency.
- For a machine operating at the recommended load to motor inertia ratio or less, the estimated number of usage times of the dynamic brake is 1000 times while the machine decelerates from the rated speed to a stop once in 10 minutes.
- Be sure to enable forced stop (EMG) after servo motor stops when using forced stop (EMG) frequently in other than emergency.

13.3.1 Dynamic brake operation

(1) Calculation of coasting distance

Fig.13.3 shows the pattern in which the servo motor comes to a stop when the dynamic brake is operated. Use equation (13.2) to calculate an approximate coasting distance to a stop. The dynamic brake time constant τ varies with the servo motor and machine operation speeds. (Refer to (2) (a), (b) in this section.)

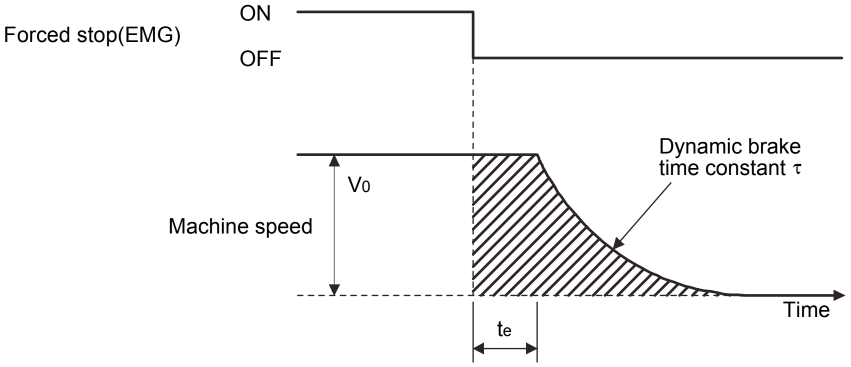

Fig. 13.3 Dynamic brake operation diagram

$$L_{max} = \frac{V_0}{60} \cdot \left\{ t_e + \tau \left(1 + \frac{J_L}{J_M} \right) \right\} \qquad (13.2)$$

L_{max}	: Maximum coasting distance	[mm][in]
Vo	: Machine rapid feed rate	[mm/min][in/min]
J_M	: Servo motor inertial moment	[×10^{-4} kg·m2]
J_L	: Load inertia moment converted into equivalent value on servo motor shaft	[×10^{-4} kg·m2]
τ	: Dynamic brake time constant	[s]
t_e	: Delay time of control section	[s]

For 7kW or lower servo amplifiers, there is internal relay delay time of about 10ms. For 11k to 22 kW servo amplifiers, there is delay caused by magnetic contactor built into the external dynamic brake (about 50ms) and delay caused by the external relay.

(2) Dynamic brake time constant

The following shows necessary dynamic brake time constant τ for the equations (13.2).

(a) 200V class servo motor

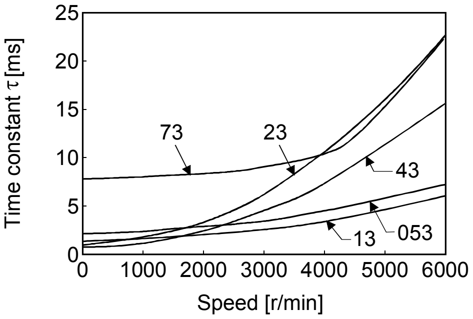

HF-MP series

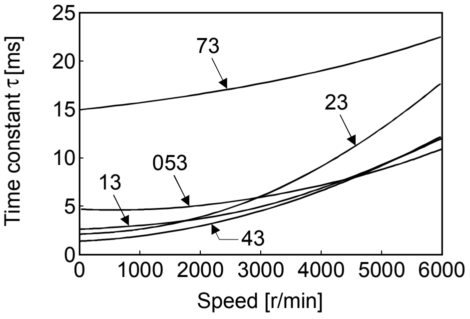

HF-KP series

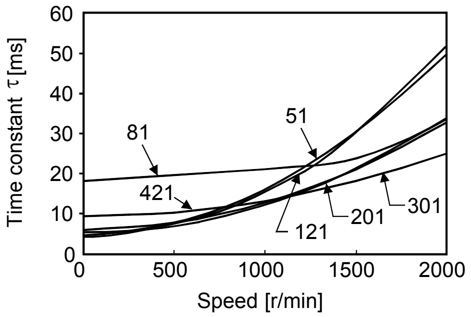

HF-SP1000r/min series

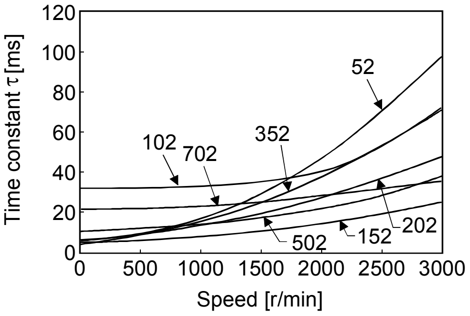

HF-SP2000r/min series

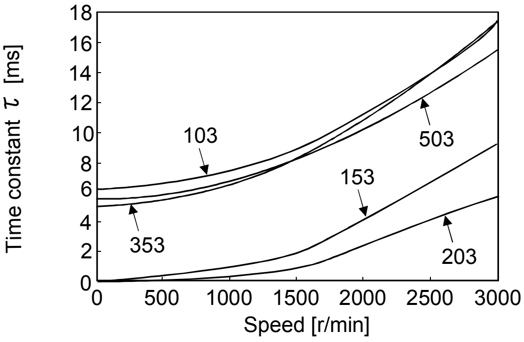

HC-RP series

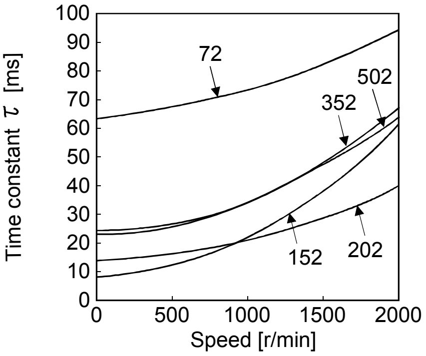

HC-UP series

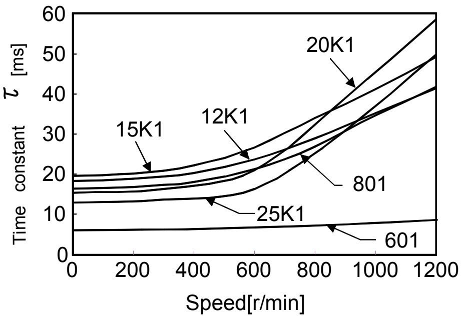

HA-LP1000r/min series

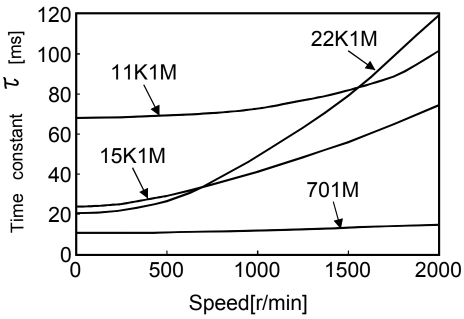

HA-LP1500r/min series

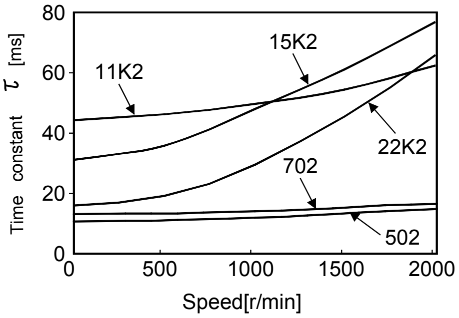

HC-LP2000r/min series

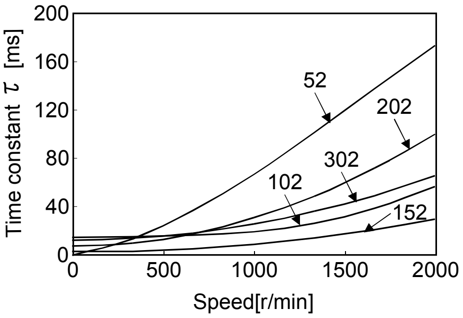

HF-LP series

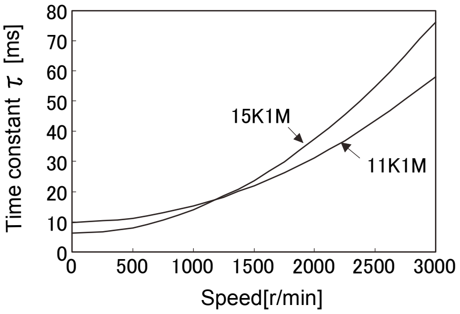

HF-JP1500r/min series

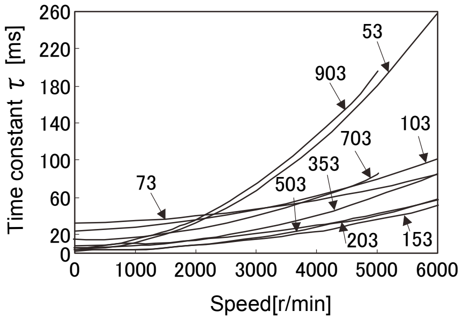

HF-JP3000r/min series

(b) 400V class servo motor

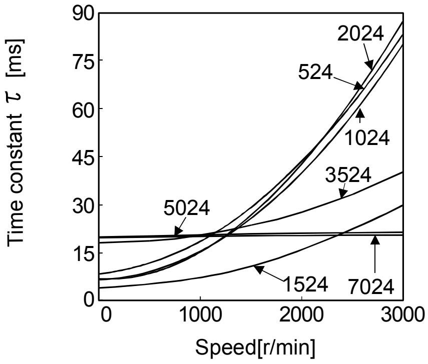

HF-SP2000r/min series

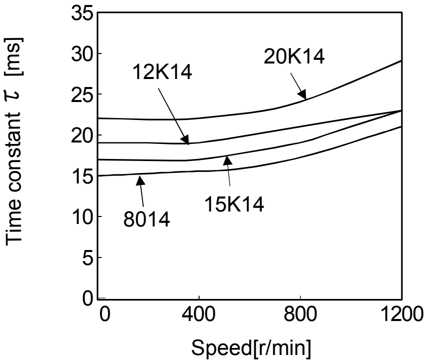

HA-LP1000r/min series

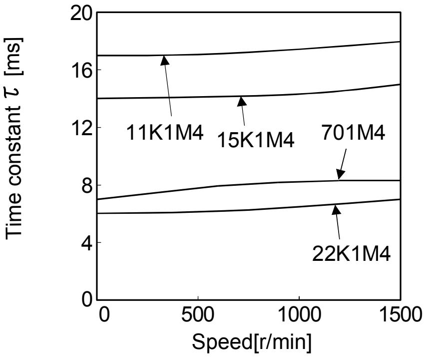

HA-LP1500r/min series

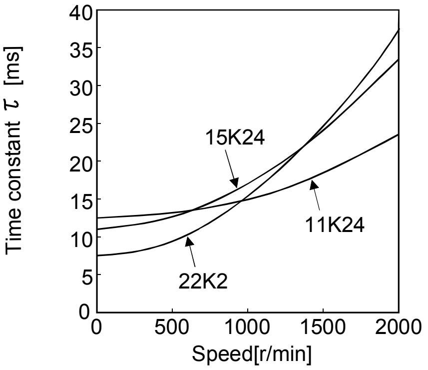

HA-LP2000r/min series

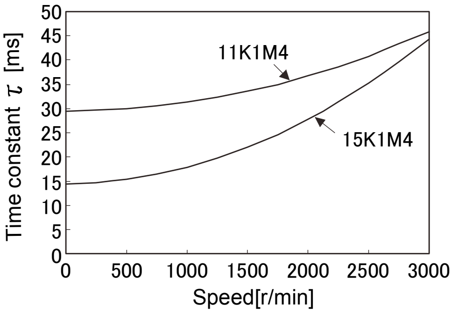

HF-JP1500r/min series

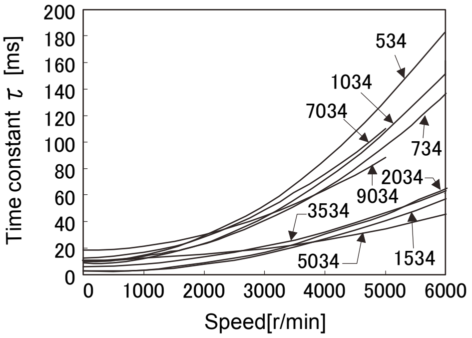

HF-JP3000r/min series

13.3.2 The dynamic brake at the load inertia moment

Use the dynamic brake under the load to motor inertia ratio indicated in the following table. If the ratio is higher than this value, the dynamic brake may burn. If there is a possibility that the ratio may exceed the value, contact your local sales office.

The values of the load inertia moment ratio in the table are the values at the maximum rotation speed of the servo motor.

Servo amplifier	Servo motor											
	HF-KP□	HF-MP□	HF-SP□1	HF-SP□2	HC-RP□	HC-UP□	HC-LP□	HA-LP□1	HA-LP□1M	HA-LP□2	HF-JP□	HF-JP□1M
MR-J3-10T(1)	30	30										
MR-J3-20T(1)	30	30										
MR-J3-40T(1)	30	30										
MR-J3-60T			30	30			30				30	
MR-J3-70T	30	30				30						
MR-J3-100T			30	30			30				30	
MR-J3-200TN			30	30	30	30	30				30	
MR-J3-350T			16	16	16	16	16				16 (Note 3)	
MR-J3-500T			15	15	15	15	15			15	15 (Note 3)	
MR-J3-700T				5 (Note 1)				5 (Note 1)	5 (Note 1)	5 (Note 1)	11 (Note 3)	
MR-J3-11KT (Note 2)								30	30	30	18 (Note 3)	10 (Note 3)
MR-J3-15KT (Note 2)								30	30	30		10 (Note 3)
MR-J3-22KT (Note 2)								30	30	30		

Servo amplifier	Servo motor					
	HF-SP□4	HA-LP□14	HA-LP□1M4	HA-LP□24	HF-JP□4	HF-JP□1M4
MR-J3-60T4	5 (Note 1)				30	
MR-J3-100T4	5 (Note 1)				30	
MR-J3-200T4	5 (Note 1)				30	
MR-J3-350T4	5 (Note 1)				30	
MR-J3-500T4	5 (Note 1)				15 (Note 3)	
MR-J3-700T4	5 (Note 1)	10	10		11 (Note 3)	
MR-J3-11KT4 (Note 2)		30	30	30	18 (Note 3)	10 (Note 3)
MR-J3-15KT4 (Note 2)		30	30	30		10 (Note 3)
MR-J3-22KT4 (Note 2)		30	30	30		

Note 1. The load inertia moment ratio is 15 at the rated rotation speed.
2. When the external dynamic brake is used.
3. The permissible load to motor inertia ratio is 30 at the rated rotation speed.

13.4 Cable flexing life

The flexing life of the cables is shown below. This graph calculated values. Since they are not guaranteed values, provide a little allowance for these values.

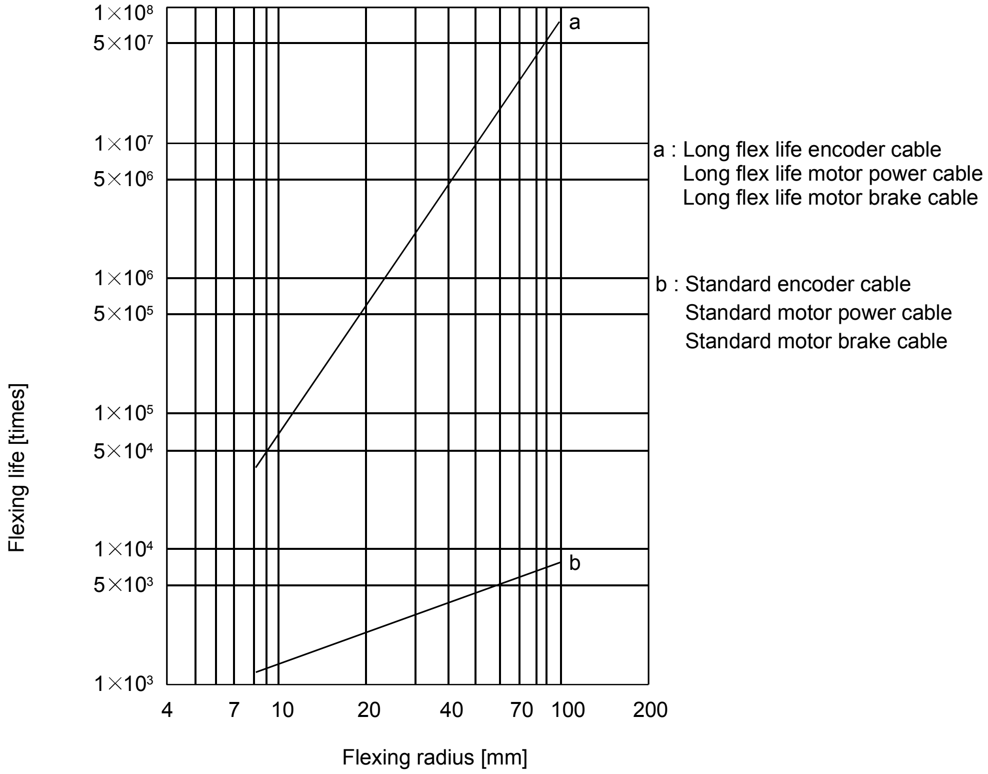

13.5 Inrush currents at power-on of main circuit and control circuit

The following table indicates the inrush currents (reference data) that will flow when the maximum permissible voltage (200V class: 253VAC, 400V class: 528VAC) is applied at the power supply capacity of 2500kVA and the wiring length of 1m. Even when you use a 1-phase 200 V AC power supply with MR-J3-10T to MR-J3-70T, the inrush currents of the main circuit power supply will be the same.

Servo amplifier	Inrush currents (A_{0-p})	
	Main circuit power supply (L_1, L_2, L_3)	Control circuit power supply (L_{11}, L_{21})
MR-J3-10T1 to 40T1	38A (Attenuated to approx. 14A in 10ms)	20 to 30A (Attenuated to approx. 0A in 1 to 2ms)
MR-J3-10T to 60T	30A (Attenuated to approx. 5A in 10ms)	
MR-J3-70T・100T	54A (Attenuated to approx. 12A in 10ms)	
MR-J3-200TN・350T	120A (Attenuated to approx. 12A in 20ms)	
MR-J3-500T	44A (Attenuated to approx. 20A in 20ms)	30A (Attenuated to approx. 0A in 3ms)
MR-J3-700T	88A (Attenuated to approx. 20A in 20ms)	
MR-J3-11KT	235A (Attenuated to approx. 20A in 20ms)	
MR-J3-15KT		
MR-J3-22KT		
MR-J3-60T4・100T4	100A (Attenuated to approx. 5A in 10ms)	40 to 50A (Attenuated to approx. 0A in 2ms)
MR-J3-200T4	120A (Attenuated to approx. 12A in 20ms)	
MR-J3-350T4・500T4	66A (Attenuated to approx. 10A in 20ms)	41A (Attenuated to approx. 0A in 3ms)
MR-J3-700T4	67A (Attenuated to approx. 34A in 20ms)	
MR-J3-11KT4	325A (Attenuated to approx. 20A in 20ms)	45A (Attenuated to approx. 0A in 3ms)
MR-J3-15KT4		
MR-J3-22KT4		

Since large inrush currents flow in the power supplies, always use no-fuse breakers and magnetic contactors. (Refer to section 14.10.)
When circuit protectors are used, it is recommended to use the inertia delay type that will not be tripped by an inrush current.

14. OPTIONS AND AUXILIARY EQUIPMENT

⚠WARNING	・Before connecting any option or peripheral equipment, turn off the power and wait for 15 minutes or more until the charge lamp turns off. Then, confirm that the voltage between P(+) and N(−) is safe with a voltage tester and others. Otherwise, an electric shock may occur. In addition, always confirm from the front of the servo amplifier whether the charge lamp is off or not.

⚠CAUTION	・Use the specified auxiliary equipment and options. Unspecified ones may lead to a fault or fire.

14.1 Cable/connector sets

POINT

- The IP rating indicated for cables and connectors is their protection against ingress of dust and raindrops when they are connected to a servo amplifier or servo motor. If the IP rating of the cables, connector, servo amplifier and servo motor vary, the overall IP rating depends on the lowest IP rating of all components.

As the cables and connectors used with this servo, purchase the options indicated in this section.

14.1.1 Combinations of cable/connector sets

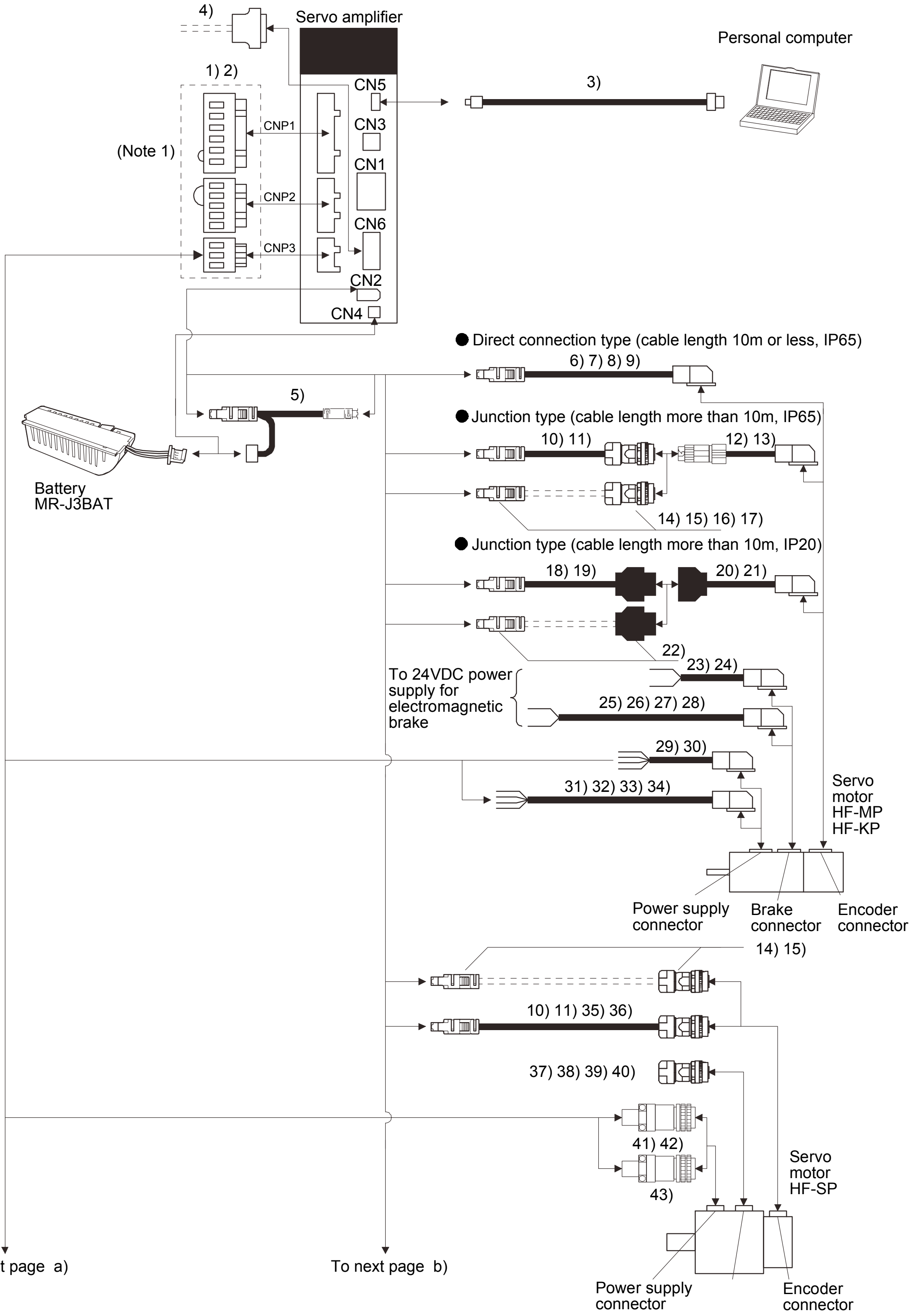

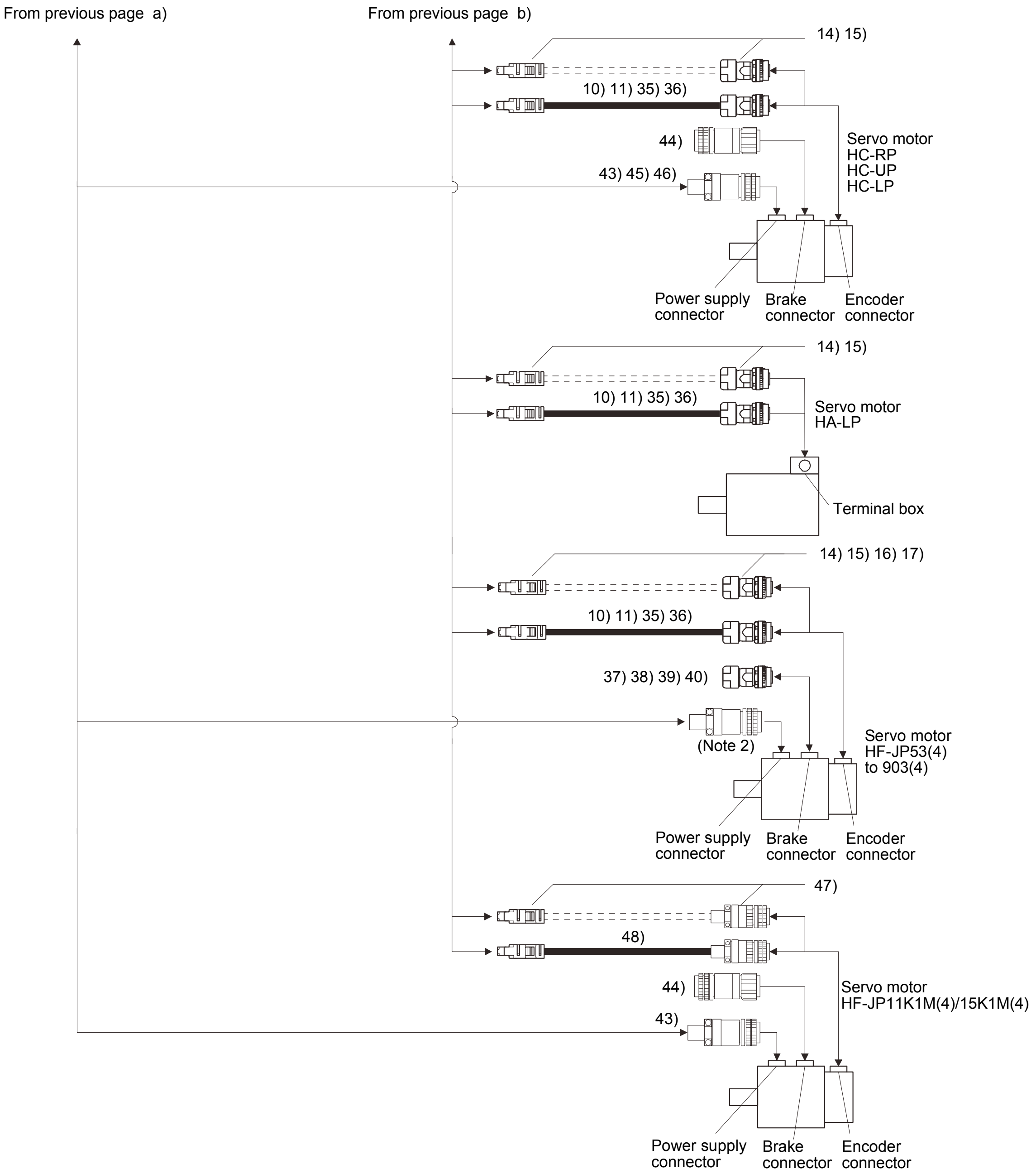

Note 1. Connectors for 3.5kW or less. For 5kW or more, terminal blocks.

2. Use 41) on HF-JP53 to 203・534 to 5034, 42) on HF-JP353・503 and 43) on HF-JP703(4)・903(4).

No.	Product	Model	Description	Application
1)	Servo amplifier power supply connector		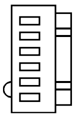 CNP1 connector: 54928-0670 (Molex) 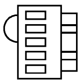 CNP2 connector: 54927-0520 (Molex) 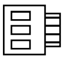 CNP3 connector: 54928-0370 (Molex) Applicable wire Wire size: 0.14mm^2(AWG26) to 2.5mm^2 (AWG14) Insulator OD: to ϕ3.8mm 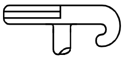 REC. Lever: 54932-0000 (Molex)	Supplied with servo amplifiers of 1kW or less in 100V class and 200V class
2)	Servo amplifier power supply connector		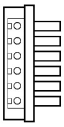 CNP1 connector: PC 4/6-STF-7, 62-CRWH (Phoenix Contact) 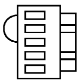 CNP2 connector: 54927-0520 (Molex) 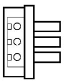 CNP3 connector: PC 4/3-STF-7, 62-CRWH (Phoenix Contact) Applicable wire Wire size: 0.2mm^2 (AWG24) to 5.5mm^2 (AWG10) Insulator OD: to ϕ5mm 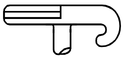 REC. Lever: 54932-0000 (Molex)	Supplied with servo amplifiers of 3.5kW in 200V class
			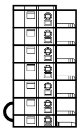 CNP1 connector: 721-207/026-000 (Plug) (WAGO) 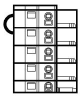 CNP2 connector: 721-205/026-000 (Plug) (WAGO) 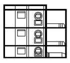 CNP3 connector: 721-203/026-000 (Plug) (WAGO) Applicable wire Wire size: 0.08mm^2 (AWG28) to 2.5mm^2 (AWG12) Insulator OD: to ϕ4.1mm 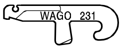 REC. Lever: 231-131 (WAGO)	Supplied with servo amplifiers of 2kW in 200V class and 2kW or less in 400V class
3)	USB cable	MR-J3USBCBL3M Cable length: 3m	For CN5 connector mini-B connector (5-pin) For personal computer connector A connector 	For connection with PC-AT compatible personal computer
4)	Connector set	MR-J2CMP2	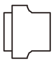 Connector: 10126-3000PE Shell kit: 10326-52F0-008(3M or equivalent)	
5)	Cable for connecting battery	MR-J3BTCBL03M	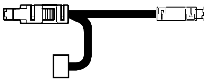 Refer to section 14.1.2 (7) for details.	For connection of battery

No.	Product	Model	Description	Application
6)	Encoder cable	MR-J3ENCBL☐M-A1-L Cable length: 2・5・10m	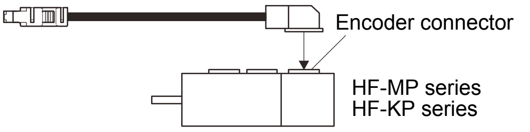 Refer to section 14.1.2 (1) for details.	IP65 Load-side lead
7)	Encoder cable	MR-J3ENCBL☐M-A1-H Cable length: 2・5・10m		IP65 Load-side lead Long bending life
8)	Encoder cable	MR-J3ENCBL☐M-A2-L Cable length: 2・5・10m	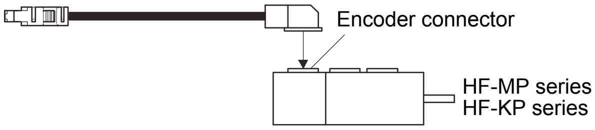 Refer to section 14.1.2 (1) for details.	IP65 Opposite to load-side lead
9)	Encoder cable	MR-J3ENCBL☐M-A2-H Cable length: 2・5・10m		IP65 Opposite to load-side lead Long bending life
10)	Encoder cable	MR-J3ENSCBL☐M-L Cable length: 2・5・10・20・30m	 For HF-KP・HF-MP・HF-SP・HA-LP・HC-UP・HC-LP・HC-RP series・HF-JP53(4) to 903(4) Refer to section 14.1.2 (5) for details.	IP67 Standard life
11)	Encoder cable	MR-J3ENSCBL☐M-H Cable length: 2・5・10・20・30・40・50m		IP67 Long bending life
12)	Encoder cable	MR-J3JSCBL03M-A1-L Cable length: 0.3m	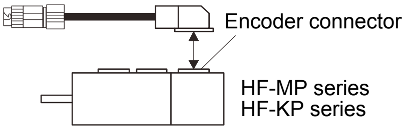 Refer to section 14.1.2 (4) for details.	IP65 Load-side lead
13)	Encoder cable	MR-J3JSCBL03M-A2-L Cable length: 0.3m	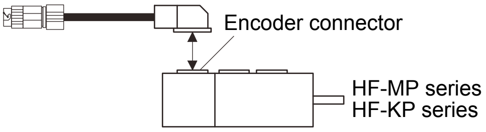 Refer to section 14.1.2 (4) for details.	IP65 Opposite to load-side lead
14)	Encoder connector set	MR-J3SCNS	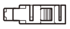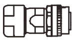 For HF-KP・HF-MP・HF-SP・HA-LP・HC-UP・HC-LP・HC-RP series・HF-JP53(4) to 903(4) Refer to section 14.1.2 (5) for details.	IP67
15)	Encoder connector set	MR-J3SCNSA	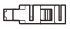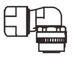 For HF-SP・HA-LP・HC-UP・HC-LP・HC-RP series・HF-JP53(4) to 903(4) Refer to section 14.1.2 (5) for details.	IP67
16)	Encoder connector set	MR-J3SCNS-S06	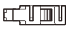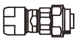 For HF-SP・HA-LP・HC-UP・HC-LP・HC-RP series・HF-JP53(4) to 903(4) Refer to section 14.1.2 (5) for details.	IP67 (Note)

No.	Product	Model	Description	Application
17)	Encoder connector set	MR-J3SCNSA-S06	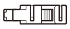  For HF-SP・HA-LP・HC-UP・HC-LP・HC-RP series・HF-JP53(4) to 903(4) Refer to section 14.1.2 (5) for details.	IP67 (Note)
18)	Encoder cable	MR-EKCBL□M-L Cable length: 20・30m	 For HF-MP・HF-KP series Refer to section 14.1.2 (2) for details.	IP20
19)	Encoder cable	MR-EKCBL□M-H Cable length: 20・30・40・50m		IP20 Long bending life
20)	Encoder cable	MR-J3JCBL03M-A1-L Cable length: 0.3m	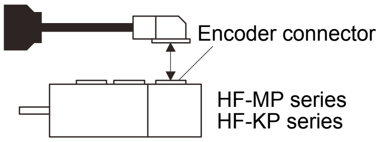 Refer to section 14.1.2 (3) for details.	IP20 Load-side lead
21)	Encoder cable	MR-J3JCBL03M-A2-L Cable length: 0.3m	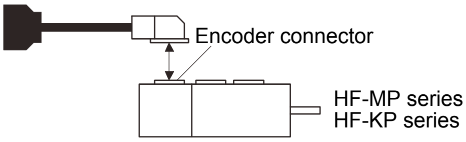 Refer to section 14.1.2 (3) for details.	IP20 Opposite to load-side lead
22)	Encoder connector set	MR-ECNM	  For HF-MP・HF-KP series Refer to section 14.1.2 (2) for details.	IP20
23)	Motor brake cable	MR-BKS2CBL03M-A1-L Cable length: 0.3m	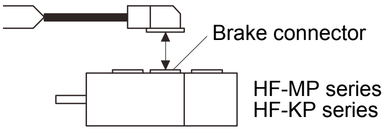 Refer to section 14.1.4 for details.	IP55 Load-side lead
24)	Motor brake cable	MR-BKS2CBL03M-A2-L Cable length: 0.3m	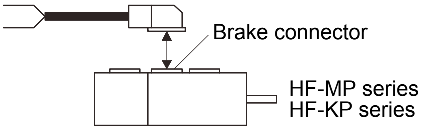 Refer to section 14.1.4 for details.	IP55 Opposite to load-side lead
25)	Motor brake cable	MR-BKS1CBL□M-A1-L Cable length: 2・5・10m	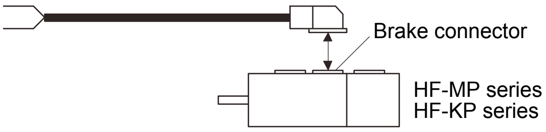 Refer to section 14.1.4 for details.	IP65 Load-side lead
26)	Motor brake cable	MR-BKS1CBL□M-A1-H Cable length: 2・5・10m		IP65 Load-side lead Long bending life

No.	Product	Model	Description	Application
27)	Motor brake cable	MR-BKS1CBL□M-A2-L Cable length: 2 ・ 5 ・ 10m	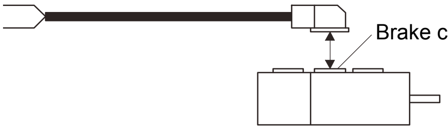 Refer to section 14.1.4 for details.	IP65 Opposite to load-side lead
28)	Motor brake cable	MR-BKS1CBL□M-A2-H Cable length: 2 ・ 5 ・ 10m		IP65 Opposite to load-side lead Long bending life
29)	Servo motor power cable	MR-PWS2CBL03M-A1-L Cable length: 0.3m	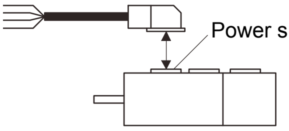 Refer to section 14.1.3 for details.	IP55 Load-side lead EN compliant
30)	Servo motor power cable	MR-PWS2CBL03M-A2-L Cable length: 0.3m	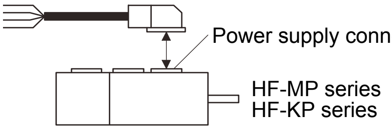 Refer to section 14.1.3 for details.	IP55 Opposite to load-side lead EN compliant
31)	Servo motor power cable	MR-PWS1CBL□M-A1-L Cable length: 2 ・ 5 ・ 10m	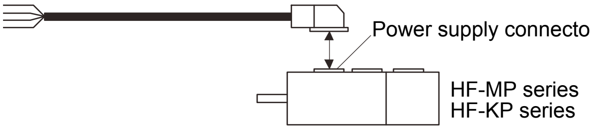 Refer to section 14.1.3 for details.	IP65 Load-side lead EN compliant
32)	Servo motor power cable	MR-PWS1CBL□M-A1-H Cable length: 2 ・ 5 ・ 10m		IP65 Load-side lead Long bending life EN compliant
33)	Servo motor power cable	MR-PWS1CBL□M-A2-L Cable length: 2 ・ 5 ・ 10m	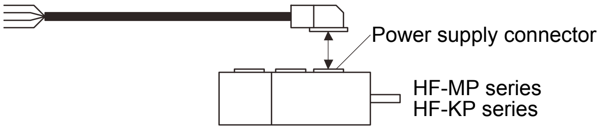 Refer to section 14.1.3 for details.	IP65 Opposite to load-side lead EN compliant
34)	Servo motor power cable	MR-PWS1CBL□M-A2-H Cable length: 2 ・ 5 ・ 10m		IP65 Opposite to load-side lead Long bending life EN compliant
35)	Encoder cable	MR-J3ENSCBL□M-L-S06 Cable length: 2 ・ 5 ・ 10 ・ 20 ・ 30m	 For HF-SP ・ HA-LP ・ HC-UP ・ HC-LP ・ HC-RP series ・ HF-JP53(4) to 903(4) Refer to section 14.1.2 (5) for details.	IP67 Standard life (Note)
36)	Encoder cable	MR-J3ENSCBL□M-H-S06 Cable length: 2 ・ 5 ・ 10 ・ 20 ・ 30 ・ 40 ・ 50m		IP67 Long bending life (Note)
37)	Brake connector set	MR-BKCNS1	Straight plug: CMV1-SP2S-L Socket contact: CMV1-#22BSC-S2-100 (DDK)  For HF-SP series ・ HF-JP53(4) to 903(4)	IP67

No.	Product	Model	Description	Application
38)	Brake connector set	MR-BKCNS1A	Angle plug: CMV1-AP2S-L Socket contact: CMV1-#22BSC-S2-100 (DDK) 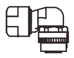 For HF-SP series ・ HF-JP53(4) to 903(4)	IP67
39)	Brake connector set	MR-BKCNS1-S06	Straight plug: CM10-SP2S-VP-L Socket contact: CM10-#22SC(S2)(D8)-100 (DDK)  For HF-SP series ・ HF-JP53(4) to 903(4)	IP67 (Note)
40)	Brake connector set	MR-BKCNS1A-S06	Angle plug: CM10-AP2S-VP-L Socket contact: CM10-#22SC(S2)(D8)-100 (DDK)  For HF-SP series ・ HF-JP53(4) to 903(4)	IP67 (Note)
41)	Power supply connector set	MR-PWCNS4	Plug: CE05-6A18-10SD-D-BSS Cable clamp: CE3057-10A-1-D (DDK) Example of applicable cable Wire size: 2mm^2 (AWG14) to 3.5mm^2 (AWG12) Overall diameter of cable: ϕ10.5 to 14.1mm 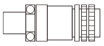 For HF-SP51 ・ 81 For HF-SP52 to 152 For HF-JP53 to 203 For HF-JP534 to 5034	IP67 EN compliant
42)	Power supply connector set	MR-PWCNS5	Plug: CE05-6A22-22D-D-BSS Cable clamp: CE3057-12A-1-D (DDK) Example of applicable cable Wire size: 5.5mm^2 (AWG10) to 8mm^2 (AWG8) Overall diameter of cable: ϕ12.5 to 16mm 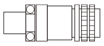 For HF-SP121 to 301 For HF-SP202 to 502 For HF-JP353 ・ 503	IP67 EN compliant
43)	Power supply connector set	MR-PWCNS3	Plug: CE05-6A32-17SD-D-BSS Cable clamp: CE3057-20A-1-D (DDK) Example of applicable cable Applicable wire size: 14mm^2 (AWG6) to 22mm^2 (AWG4) Overall diameter of cable: ϕ22 to 23.8mm 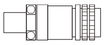 For HF-SP421 For HF-SP702 For HA-LP702 For HF-JP703(4) ・ 903(4) ・ 11K1M(4) ・ 15K1M(4)	IP67 EN compliant
44)	Brake connector set	MR-BKCN	Plug: D/MS3106A10SL-4S(D190) (DDK) Cable clamp: YSO10-5-8 (Daiwa Dengyo) Example of applicable cable Applicable wire size: 0.3mm^2 (AWG22) to 1.25mm^2 (AWG16) Overall diameter of cable: ϕ5 to 8.3mm 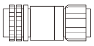 For HA-LP For HC-UP For HC-LP For HF-JP11K1M(4) ・ 15K1M(4)	IP65
45)	Power supply connector set	MR-PWCNS1	Plug: CE05-6A22-23SD-D-BSS Cable clamp: CE3057-12A-2-D (DDK) Example of applicable cable Applicable wire size: 2mm^2 (AWG14) to 3.5mm^2 (AWG12) Overall diameter of cable: ϕ9.5 to 13mm 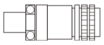 For HC-UP For HC-LP For HC-RP	IP65 EN compliant

No.	Product	Model	Description	Application
46)	Power supply connector set	MR-PWCNS2	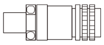 Plug: CE05-6A24-10SD-D-BSS Cable clamp: CE3057-16A-2-D (DDK) Example of applicable cable Applicable wire size: 5.5mm^2 (AWG10) to 8mm^2 (AWG8) Overall diameter of cable: ϕ 13 to 15.5mm For HA-LP For HC-UP For HC-LP For HC-RP	IP65 EN compliant
47)	Encoder connector set	MR-ENECNS	Receptacle: 36210-0100PL Shell kit: 36310-3200-008 (3M) Or Connector set: 54599-1019 (Molex) Plug: D/MS3106A20-29S(D190) Cable clamp: CE3057-12A-3-D Backshell: CE02-20BS-S-D (DDK)  	IP67
48)	IP67 compliant Encoder cable	MR-ENECBL □ M-H Refer to section 14.1.2 (6).	Receptacle: 36210-0100PL Shell kit: 36310-3200-008 (3M) Or Connector set: 54599-1019 (Molex) Plug: D/MS3106A20-29S(D190) Cable clamp: CE3057-12A-3-D Backshell: CE02-20BS-S-D (DDK) 	Long bending life IP67

Note. Use this option when the connector is expected to receive large vibration and shock.

14.1.2 Encoder cable/connector sets

(1) MR-J3ENCBL □ M-A1-L/H ・ MR-J3ENCBL □ M-A2-L/H

These cables are encoder cables for the HF-MP ・ HF-KP series servo motors. The numerals in the Cable Length field of the table are the symbols entered in the □ part of the cable model. The cables of the lengths with the symbols are available.

Cable model	Cable length			IP rating	Bending life	Application
	2m	5m	10m			
MR-J3ENCBL □ M-A1-L	2	5	10	IP65	Standard	For HF-MP ・ HF-KP servo motor Load side lead
MR-J3ENCBL □ M-A1-H	2	5	10	IP65	Long bending life	
MR-J3ENCBL □ M-A2-L	2	5	10	IP65	Standard	For HF-MP ・ HF-KP servo motor Opposite-to-load side lead
MR-J3ENCBL □ M-A2-H	2	5	10	IP65	Long bending life	

(a) Connection of servo amplifier and servo motor

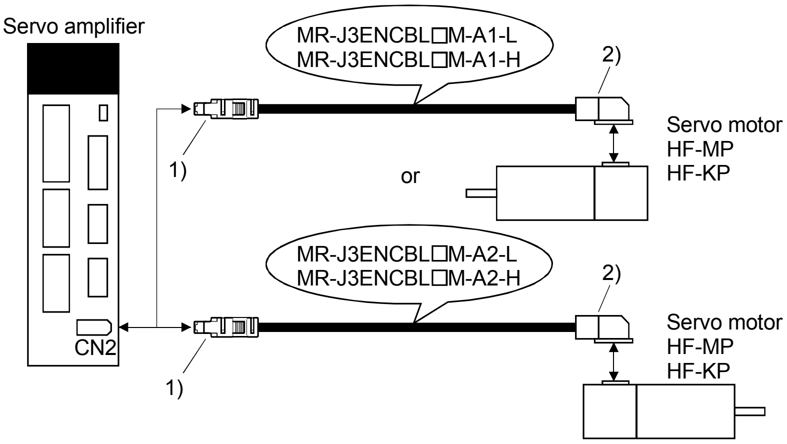

Cable model	1) For CN2 side connector	2) For encoder side connector
MR-J3ENCBL □ M-A1-L	Receptacle: 36210-0100PL Shell kit: 36310-3200-008 (3M) Connector set: 54599-1019(Molex) (Note) Signal layout 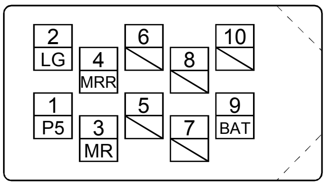 View seen from wiring side. or (Note) Signal layout 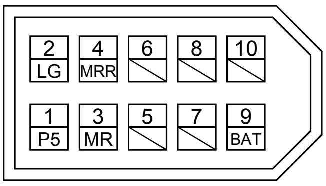 View seen from wiring side. Note. Keep open the pins shown with ▧. Especially, pin 10 is provided for manufacturer adjustment. If it is connected with any other pin, the servo amplifier cannot operate normally. Referring to section 4.9, securely connect the external conductor to the ground plate and fix it to the connector shell.	Connector: 2174053-1 Crimping tool for ground clip: 1596970-1 Crimping tool for receptacle contact: 1596847-1 (TE Connectivity) (Note) Signal layout 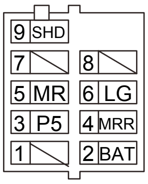 View seen from wiring side. Note. Keep open the pin shown with an ▧.
MR-J3ENCBL □ M-A1-H		
MR-J3ENCBL □ M-A2-L		
MR-J3ENCBL □ M-A2-H		

(b) Cable internal wiring diagram

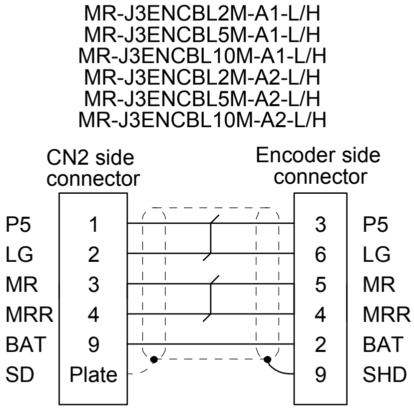

(2) MR-EKCBL ☐ M-L/H

POINT

- The following encoder cables are of four-wire type. When using any of these encoder cables, set parameter No.PC22 to "1 ☐ ☐ ☐" to select the four-wire type.
  MR-EKCBL30M-L
  MR-EKCBL30M-H
  MR-EKCBL40M-H
  MR-EKCBL50M-H

The servo amplifier and servo motor cannot be connected with these cables only. The servo motor side encoder cable (MR-J3JCBL03M-A1-L or MR-J3JCBL03M-A2-L) is required.

The numerals in the Cable Length field of the table are the symbols entered in the ☐ part of the cable model. The cables of the lengths with the symbols are available.

Cable model	Cable length				IP rating	Bending life	Application
	20m	30m	40m	50m			
MR-EKCBL ☐ M-L	20	(Note) 30			IP20	Standard	For HF-MP · HF-KP servo motor Use in combination with MR-J3JCBL03M-A1-L or MR-J3JCBL03M-A2-L.
MR-EKCBL ☐ M-H	20	(Note) 30	(Note) 40	(Note) 50	IP20	Long bending life	

Note. Four-wire type cable.

(a) Connection of servo amplifier and servo motor

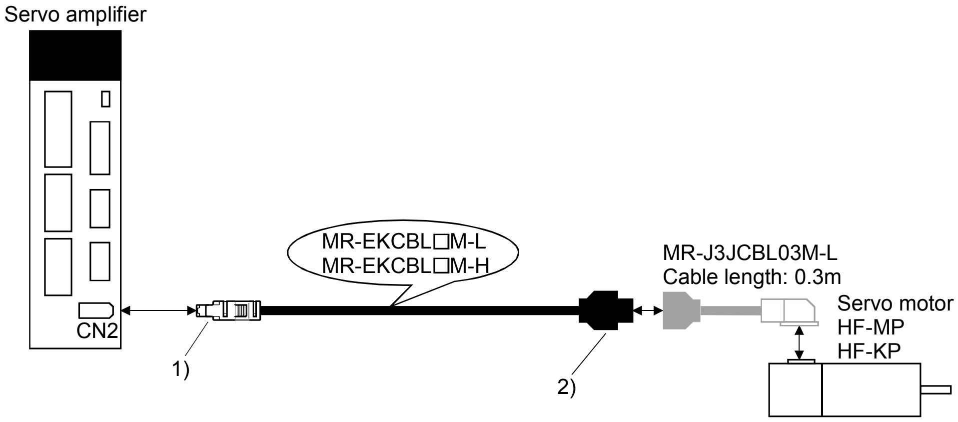

Cable model	1) CN2 side connector		2) Encoder side connector
MR-EKCBL ☐ M-L	Receptacle: 36210-0100PL Shell kit: 536310-3200-008 (3M) (Note) Signal layout 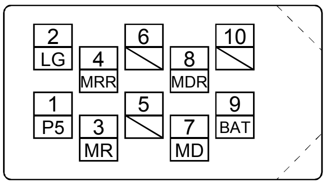 View seen from wiring side.	or Connector set: 54599-1019 (Molex) (Note) Signal layout 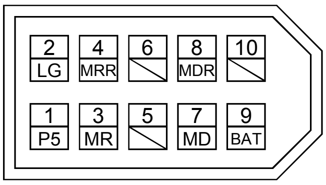 View seen from wiring side.	Housing: 1-172161-9 Connector pin: 170359-1 (TE Connectivity or equivalent) Cable clamp: MTI-0002 (Toa Electric Industry) Signal layout 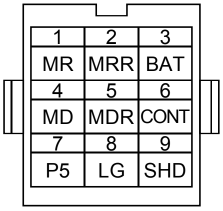 View seen from wiring side.
MR-EKCBL ☐ M-H	Note. Keep open the pins shown with ⧅. Especially, pin 10 is provided for manufacturer adjustment. If it is connected with any other pin, the servo amplifier cannot operate normally. Referring to section 4.9, securely connect the external conductor to the ground plate and fix it to the connector shell.		

(b) Internal wiring diagram

MR-EKCBL20M-L

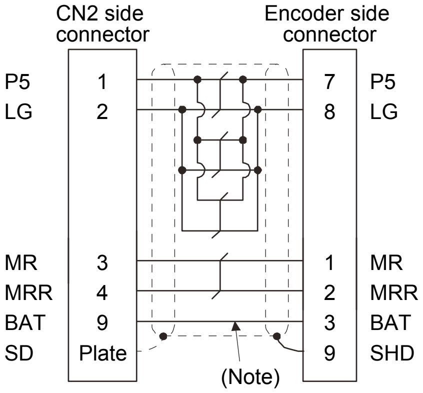

MR-EKCBL30M-L

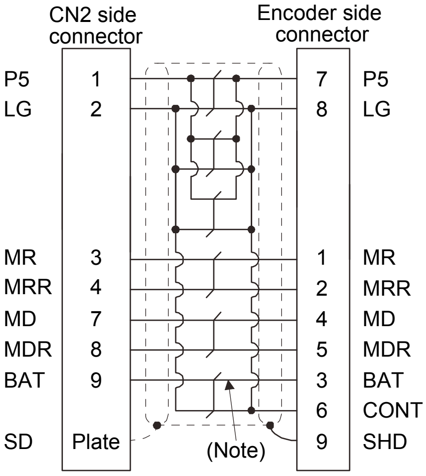

MR-EKCBL20M-H

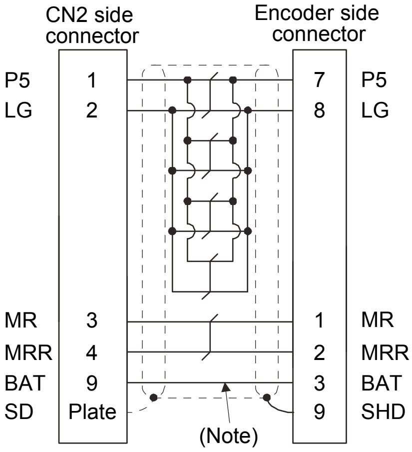

MR-EKCBL30M-H
MR-EKCBL40M-H
MR-EKCBL50M-H

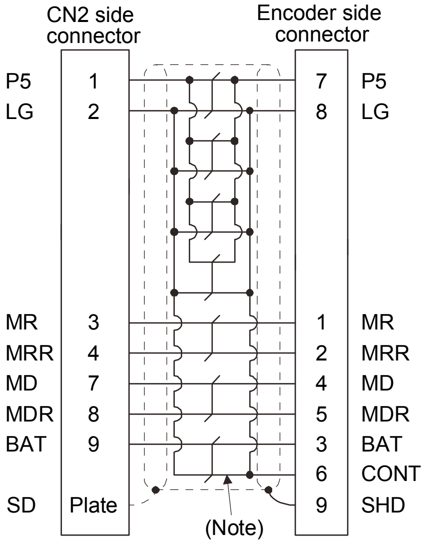

Note. Always make connection for use in an absolute position detection system. Wiring is not necessary for use in an incremental system.

When fabricating the cable, use the wiring diagram corresponding to the length indicated below.

Cable bending life	Applicable wiring diagram	
	Less than 30m	30m to 50m
Standard	MR-EKCBL20M-L	MR-EKCBL30M-L
Long bending life	MR-EKCBL20M-H	MR-EKCBL30M-H MR-EKCBL40M-H MR-EKCBL50M-H

(c) When fabricating the encoder cable

Use the following parts to fabricate a cable according to the wiring diagram in (b). Refer to section 14.9 for the specifications of the used cable.

Parts	Description
Connector set	MR-ECNM (Option) 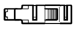 Servo amplifier side connector Receptacle: 36210-0100PL Shell kit: 36310-3200-008 (3M) Or Connector set: 54599-1019(Molex)  Encoder side connector Housing: 1-172161-9 Connector pin: 170359-1 (TE Connectivity or equivalent) Cable clamp: MTI-0002 (Toa Electric Industry)

(3) MR-J3JCBL03M-A1-L・MR-J3JCBL03M-A2-L

The servo amplifier and servo motor cannot be connected with these cables only. The servo motor-side encoder cable (MR-EKCBL □ M-L/H) is required.

Cable model	Cable length	IP rating	Bending life	Application
MR-J3JCBL03M-A1-L	0.3m	IP20	Standard	For HF-MP・HF-KP servo motor Load-side lead Use in combination with MR-EKCBL □ M-L/H.
MR-J3JCBL03M-A2-L				For HF-MP・HF-KP servo motor Opposite-to-load side lead Use in combination with MR-EKCBL □ M-L/H.

(a) Connection of servo amplifier and servo motor

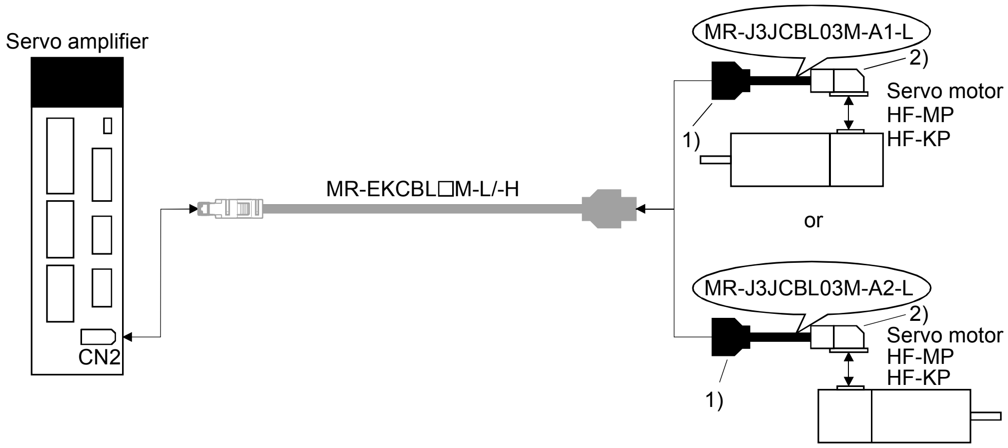

Cable model	1) Junction connector	2) Encoder side connector
MR-J3JCBL03M-A1-L	Housing: 1-172169-9 Contact: 1473226-1 Cable clamp: 316454-1 (TE Connectivity) Signal layout 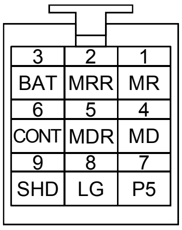 View seen from wiring side.	Connector: 2174053-1 Crimping tool for ground clip: 1596970-1 Crimping tool for receptacle contact: 1596847-1 (TE Connectivity) Signal layout 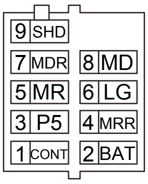 View seen from wiring side.
MR-J3JCBL03M-A2-L		

(b) Internal wiring diagram

MR-J3JCBL03M-A1-L
MR-J3JCBL03M-A2-L

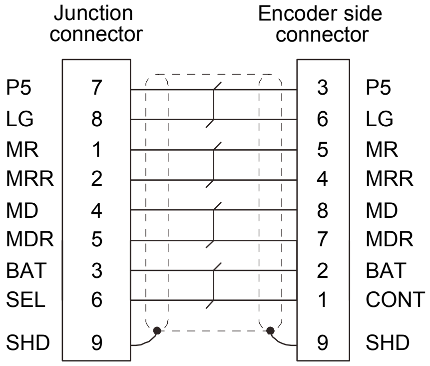

(4) MR-J3JSCBL03M-A1-L・MR-J3JSCBL03M-A2-L

The servo amplifier and the servo motor cannot be connected by these cables alone. The servo motor-side encoder cable (MR-J3ENSCBL ☐ M-L/H) is required.

Cable model	Cable length	IP rating	Bending life	Application
MR-J3JCBL03M-A1-L	0.3m	IP65	Standard	Load-side lead for HF-KP・HF-MP servo motor Use in combination with MR-J3ENSCBL ☐ M-L/H.
MR-J3JCBL03M-A2-L				Opposite-to-load side lead for HF-KP・HF-MP servo motor Use in combination with MR-J3ENSCBL ☐ M-L/H.

(a) Connection of servo amplifier and servo motor

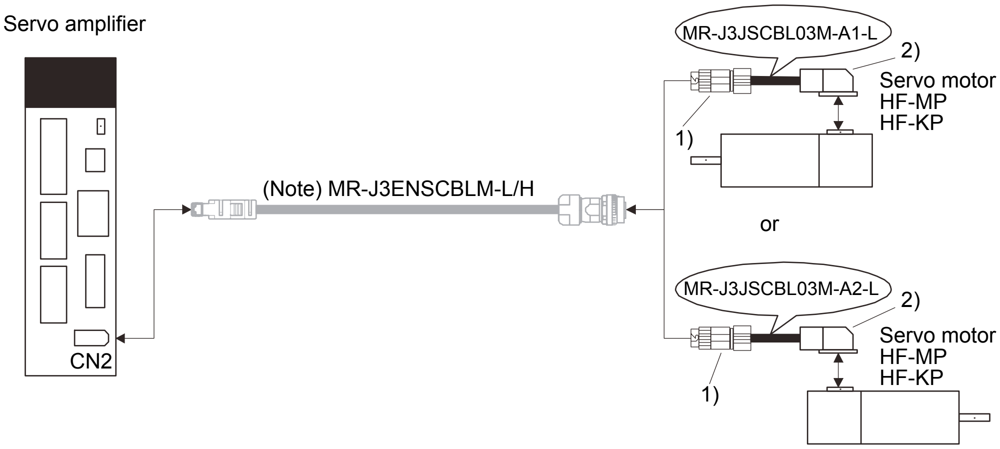

Note. Refer to (5) in this section for details of this cable. However, MR-J3ENSCBL ☐ M-L-S06 and MR-J3ENSCBL ☐ M-H-S06 cannot be used.

Cable model	1) Junction connector	2) Encoder side connector
MR-J3JSCBL03M-A1-L	Receptacle: CM10-CR10P-M (DDK) Applicable wire AWG20 or less (Note) Signal layout 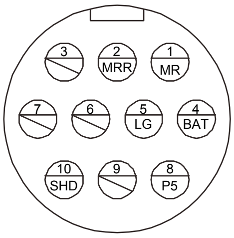 View seen from wiring side. Note. Keep open the pin shown with ⦸.	Connector: 2174053-1 Crimping tool for ground clip: 1596970-1 Crimping tool for receptacle contact: 1596847-1 (TE Connectivity) (Note) Signal layout 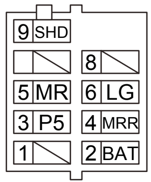 View seen from wiring side. Note. Keep open the pin shown with ⦸
MR-J3JSCBL03M-A2-L		

(b) Internal wiring diagram

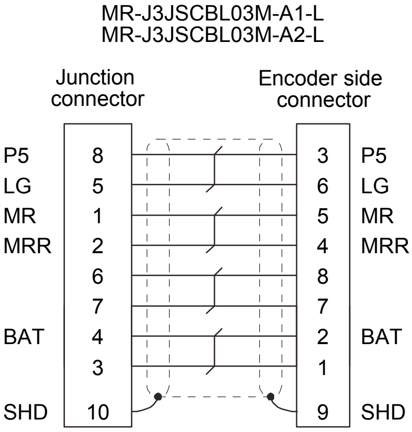

(5) MR-J3ENSCBL □ M-L(-S06) ･ MR-J3ENSCBL □ M-H(-S06)

These cables are encoder cables for the HF-MP ･ HF-KP ･ HF-SP ･ HA-LP ･ HC-RP ･ HC-UP ･ HC-LP series ･ HF-JP53(4) to 903(4) servo motors. The numerals in the Cable Length field of the table are the symbols entered in the □ part of the cable model. The cables of the lengths with the symbols are available.

Cable model	Cable length							IP rating	Bending life	Application
	2m	5m	10m	20m	30m	40m	50m			
MR-J3ENSCBL □ M-L	2	5	10	20	30			IP67	Standard	For HF-MP ･ HF-KP ･ HF-SP ･ HA-LP ･ HC-RP ･ HC-UP ･ HC-LP series ･ HF-JP53(4) to 903(4) servo motor
MR-J3ENSCBL □ M-H	2	5	10	20	30	40	50	IP67	Long bending life	
MR-J3ENSCBL □ M-L-S06	2	5	10	20	30			IP67	Standard	For HF-SP ･ HA-LP ･ HC-RP ･ HC-UP ･ HC-LP series ･ HF-JP53(4) to 903(4) servo motor (Note)
MR-J3ENSCBL □ M-H-S06	2	5	10	20	30	40	50	IP67	Long bending life	

Note. Use this option when the connector is expected to receive large vibration and shock. The connector on the servo motor side can be disconnected up to 5 times. Use the dedicated tool 357J-52780T (DDK) or a spanner with jaw size of 21mm.

(a) Connection of servo amplifier and servo motor

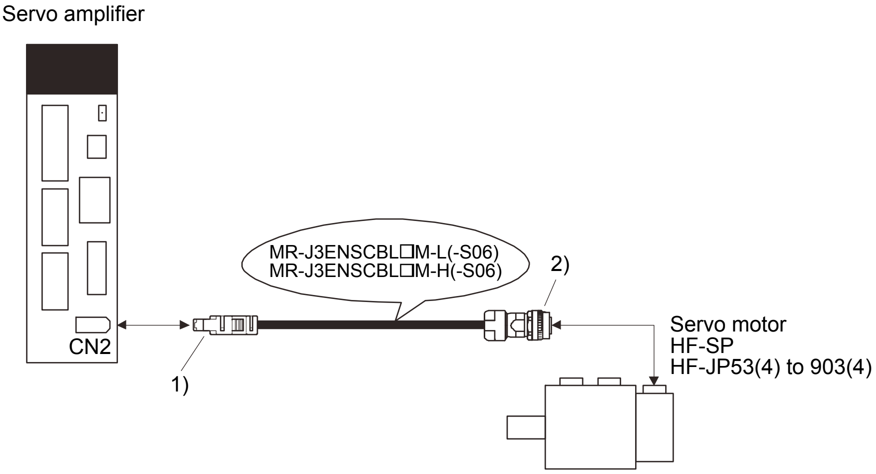

<table>
<tr><th>Cable model</th><th>1) CN2 side connector</th><th>2) Encoder side connector</th></tr>
<tr><td>MR-J3ENSCBL□
M-L</td><td rowspan="4">Receptacle: 36210-0100PL
Shell kit: 36310-3200-008
(3M)
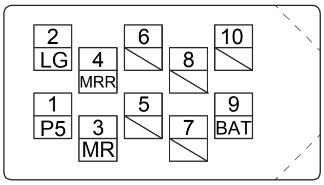
View seen from wiring side. (Note)
or
Connector set: 54599-1019
(Molex)
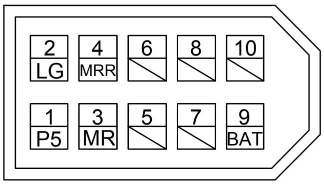
View seen from wiring side. (Note)
Note. Keep open the pins shown with ⧅. Especially, pin 10 is provided for manufacturer adjustment. If it is connected with any other pin, the servo amplifier cannot operate normally. Referring to section 4.9, securely connect the external conductor to the ground plate and fix it to the connector shell.</td><td rowspan="2"><table>
<tr><th rowspan="2">Cable length</th><th rowspan="2">Bending life</th><th colspan="2">Plug (DDK)</th></tr>
<tr><th>Straight plug</th><th>Socket contact</th></tr>
<tr><td rowspan="2">10m or less</td><td>Long bending life</td><td rowspan="3">CMV1-SP10S-M1</td><td rowspan="2">CMV1-#22ASC-C1-100
Applicable wire size: AWG24 to 20
Crimping tool: 357J-53162T</td></tr>
<tr><td>Standard</td></tr>
<tr><td rowspan="2">20m or more</td><td>Long bending life</td><td rowspan="2">CMV1-#22ASC-C2-100
Applicable wire size: AWG28 to 24
Crimping tool: 357J-53163T</td></tr>
<tr><td>Standard</td><td>CMV1-SP10S-M2</td></tr>
</table>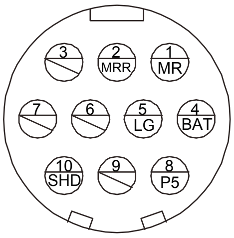
View seen from wiring side. (Note)
Note. Keep open the pin shown with an ⊘.</td></tr>
<tr><td>MR-J3ENSCBL□
M-H</td></tr>
<tr><td>MR-J3ENSCBL□
M-L-S06</td><td rowspan="2"><table>
<tr><th rowspan="2">Cable length</th><th rowspan="2">Bending life</th><th colspan="2">Plug (DDK)</th></tr>
<tr><th>Straight plug</th><th>Socket contact</th></tr>
<tr><td rowspan="2">10m or less</td><td>Long bending life</td><td rowspan="4">CM10-SP10S-VP-M</td><td rowspan="2">CM10-#22SC(C1)(D8)-100
Applicable wire size: AWG22 to 20
Crimping tool: 357J-50446</td></tr>
<tr><td>Standard</td></tr>
<tr><td rowspan="2">20m or more</td><td>Long bending life</td><td rowspan="2">CM10-#22SC(C2)(D8)-100
Applicable wire size: AWG28 to 23
Crimping tool: 357J-50447</td></tr>
<tr><td>Standard</td></tr>
</table>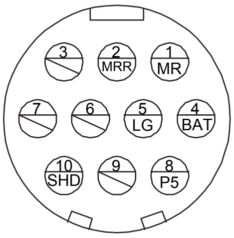
View seen from wiring side. (Note)
Note. Keep open the pin shown with an ⊘.</td></tr>
<tr><td>MR-J3ENSCBL□
M-H-S06</td></tr>
</table>

(b) Internal wiring diagram

MR-J3ENSCBL2M-L(-S06)/H(-S06)
MR-J3ENSCBL5M-L(-S06)/H(-S06)
MR-J3ENSCBL10M-L(-S06)/H(-S06)

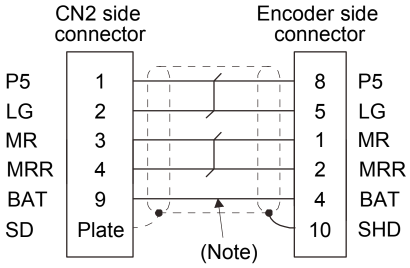

MR-J3ENSCBL20M-L(-S06)
MR-J3ENSCBL30M-L(-S06)

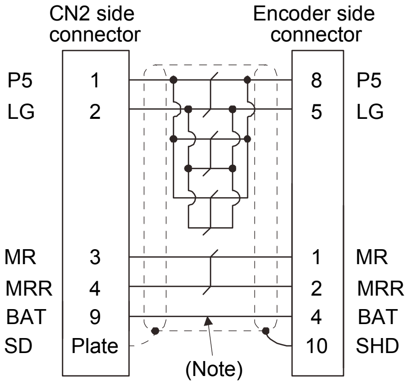

MR-J3ENSCBL20M-H(-S06)
MR-J3ENSCBL30M-H(-S06)
MR-J3ENSCBL40M-H(-S06)
MR-J3ENSCBL50M-H(-S06)

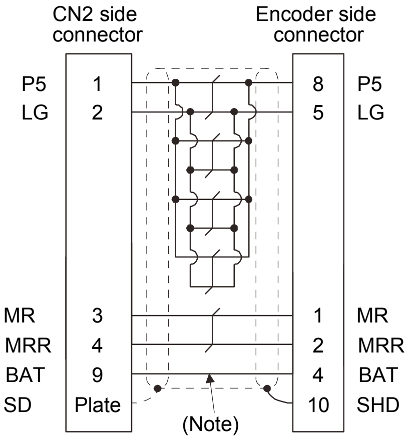

Note. Always make connection for use in an absolute position detection system. Wiring is not necessary for use in an incremental system.

(c) When fabricating the encoder cable

When fabricating the cable, prepare the following parts, and fabricate it according to the wiring diagram in (b). Refer to section 14.9 for the specifications of the used cable.

Parts (Connector set)	Description	
MR-J3SCNS (Note 2)	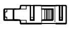 Servo amplifier side connector Receptacle: 36210-0100PL Shell kit: 36310-3200-008 (3M) Or Connector set: 54599-1019(Molex)	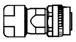 Encoder side connector Straight plug: CMV1-SP10S-M2 Socket contact: CMV1-#22ASC-S1-100 Applicable wire size: AWG20 or less (DDK)
MR-J3SCNS-S06 (Note 1)		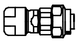 Encoder side connector Straight plug: CM10-SP10S-VP-M Socket contact: CM10-#22SC(S1)(D8)-100 Applicable wire size: AWG20 or less (DDK)
MR-J3SCNSA (Note 2)		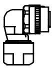 Encoder side connector Angle clamp: CMV1-AP10S-M2 Socket contact: CMV1-#22ASC-S1-100 Applicable wire size: AWG20 or less (DDK)
MR-J3SCNSA-S06 (Note 1)		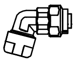 Encoder side connector Angle clamp: CM10-AP10S-VP-M Socket contact: CM10-#22SC(S1)(D8)-100 Applicable wire size: AWG20 or less (DDK)

Note 1. Use this option when the connector is expected to receive large vibration and shock. The connector on the servo motor side can be disconnected up to 5 times. Use the dedicated tool 357J-52780T (DDK) or a spanner with jaw size of 21mm.

2. Cable clamp and bushing for 5.5mm to 7.5mm and 7.0mm to 9.0mm of cable outer diameter are included.

(6) MR-ENECBL □ M-H

POINT

- The following encoder cables are of four-wire type. When using any of these encoder cables, set parameter No.PC22 to "1 □ □ □" to select the four-wire type.
  MR-EKCBL30M-H
  MR-EKCBL40M-H
  MR-EKCBL50M-H

These cables are encoder cables for the HF-JP11K1M(4) ･ 15K1M(4) servo motors. The numerals in the Cable Length field of the table are the symbols entered in the □ part of the cable model. The cables of the lengths with the symbols are available.

Cable model	Cable length							IP rating	Bending life	Application
	2m	5m	10m	20m	30m	40m	50m			
MR-ENECBL □ M-H	2	5	10	20	(Note) 30	(Note) 40	(Note) 50	IP67	Long bending life	For HF-JP11K1M(4) ･ 15K1M(4) servo motor

Note. Four-wire type cable.

(a) Connection of servo amplifier and servo motor

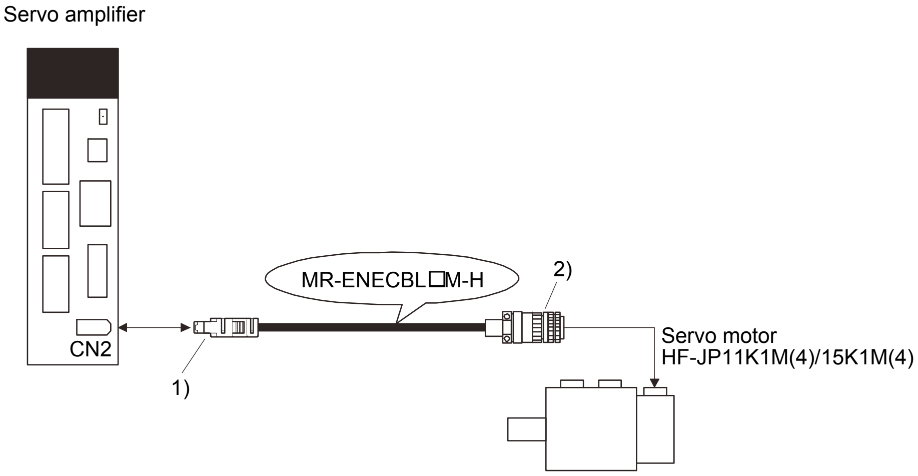

<table>
<tr><th>Cable model</th><th>1) CN2 side connector</th><th>2) Encoder side connector</th></tr>
<tr>
<td>MR-ENECBL □ M-H</td>
<td>Receptacle: 36210-0100PL
Shell kit: 36310-3200-008
(3M)
(Note) Signal layout
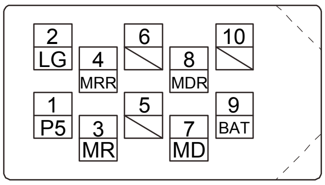
View seen from wiring side.
or
Connector set: 54599-1019
(Molex)
(Note) Signal layout
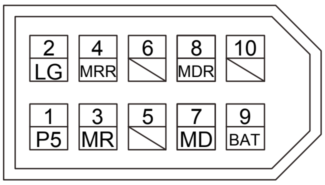
View seen from wiring side.
Note. Keep open the pins shown with ⧅. Especially, pin 10 is provided for manufacturer adjustment. If it is connected with any other pin, the servo amplifier cannot operate normally. Referring to section 4.9, securely connect the external conductor to the ground plate and fix it to the connector shell.</td>
<td>Plug: D/MS3106A20-29S(D190)
Cable clamp:
CE3057-12A-3-D
Backshell: CE02-20BS-S-D
(Note) Signal layout
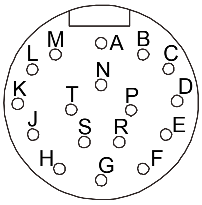
View seen from wiring side.
<table>
<tr><th>Pin</th><th>Signal</th></tr>
<tr><td>A</td><td>MD</td></tr>
<tr><td>B</td><td>MDR</td></tr>
<tr><td>C</td><td>MR</td></tr>
<tr><td>D</td><td>MRR</td></tr>
<tr><td>E</td><td>⧅</td></tr>
<tr><td>F</td><td>BAT</td></tr>
<tr><td>G</td><td>⧅</td></tr>
<tr><td>H</td><td>⧅</td></tr>
<tr><td>J</td><td>⧅</td></tr>
</table>
<table>
<tr><th>Pin</th><th>Signal</th></tr>
<tr><td>K</td><td>⧅</td></tr>
<tr><td>L</td><td>⧅</td></tr>
<tr><td>M</td><td>CONT</td></tr>
<tr><td>N</td><td>SHD</td></tr>
<tr><td>P</td><td>⧅</td></tr>
<tr><td>R</td><td>LG</td></tr>
<tr><td>S</td><td>P5</td></tr>
<tr><td>T</td><td>⧅</td></tr>
</table>
Note. Keep open the pins shown with ⧅.</td>
</tr>
</table>

(b) Internal wiring diagram

1) Less than 30m

To fabricate, use the connector set MR-ECNS (IP20 compatible) or MR-ENECNS (IP67 compatible). Use the following wiring diagram to fabricate a cable shorter than 30m.

MR-ENECBL2M-H
MR-ENECBL5M-H
MR-ENECBL10M-H

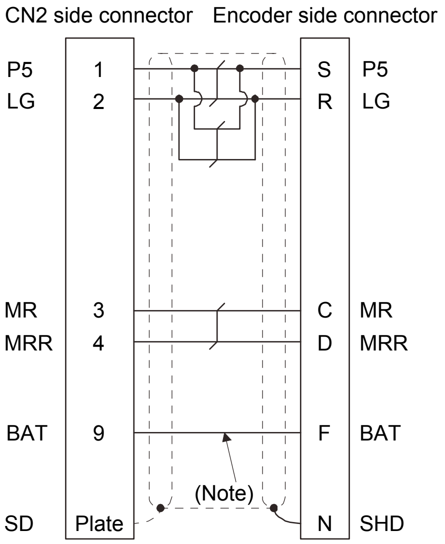

MR-ENECBL20M-H

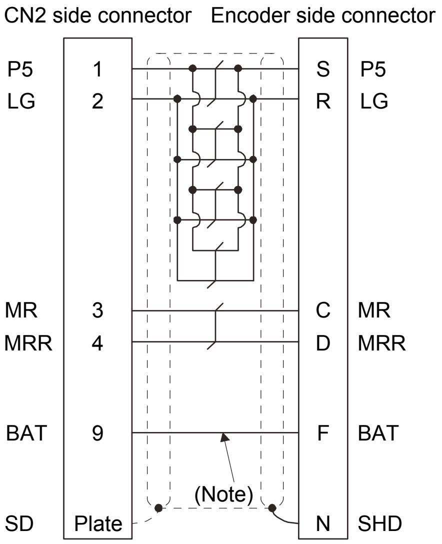

Note. Always make connection for use in an absolute position detection system. Wiring is not necessary for use in an incremental system.

2) For 30m or more

To fabricate, use the connector set MR-ECNS (IP20 compatible) or MR-ENECNS (IP67 compatible). Use the following wiring diagram to fabricate a cable up to 50m.

MR-ENECBL30M-H
MR-ENECBL40M-H
MR-ENECBL50M-H

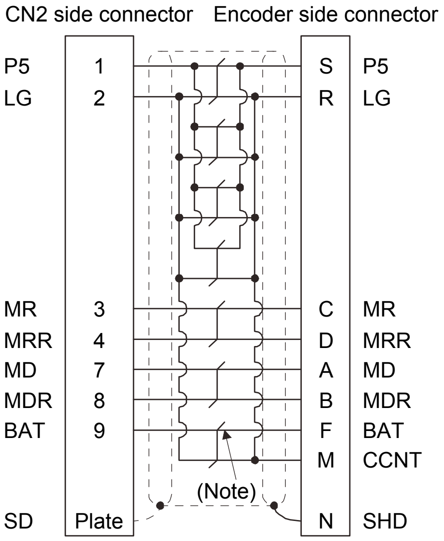

Note. Always make connection for use in an absolute position detection system. Wiring is not necessary for use in an incremental system.

(7) MR-J3BTCBL03M

This cable is a battery connection cable. Use this cable to retain the current position even if the encoder cable is disconnected from the servo amplifier.

Cable model	Cable length	Application
MR-J3BTCBL03M	0.3m	For HF-MP ・ HF-KP ・ HF-SP ・ HA-LP ・ HC-RP ・ HC-UP ・ HC-LP ・ HF-JP series servo motor

(a) Connection of servo amplifier and servo motor

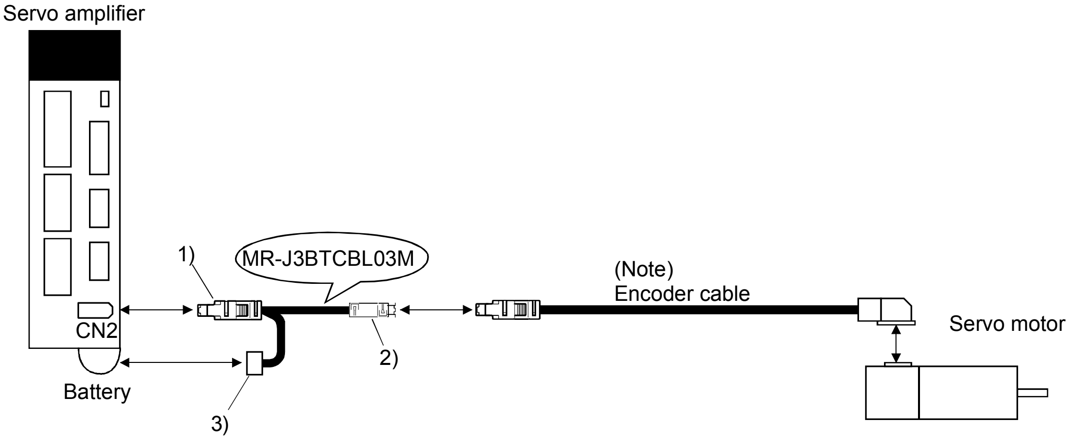

Note. For the encoder cable, refer to (1) to (6) in this section.

Cable model	1) CN2 side connector	2) Junction connector	3) Battery connector
MR-J3BTCBL03M	Receptacle: 36210-0100PL Shell kit: 36310-3200-008 (3M) Or Connector set: 54599-1019 (Molex)	Plug: 36110-3000FD Shell kit: 36310-F200-008 (3M)	Connector: DF3-2EP-2C Contact: DF3-EP2428PCA (Hirose Electric)

14.1.3 Motor power supply cables

These cables are motor power supply cables for the HF-MP · HF-KP series servo motors. The numerals in the Cable Length field of the table are the symbols entered in the □ part of the cable model. The cables of the lengths with the symbols are available.
Refer to section 4.10 when wiring.

Cable model	Cable length				IP rating	Bending life	Application
	0.3m	2m	5m	10m			
MR-PWS1CBL □ M-A1-L		2	5	10	IP65	Standard	For HF-MP · HF-KP servo motor Load-side lead
MR-PWS1CBL □ M-A2-L		2	5	10	IP65	Standard	For HF-MP · HF-KP servo motor Opposite-to-load side lead
MR-PWS1CBL □ M-A1-H		2	5	10	IP65	Long bending life	For HF-MP · HF-KP servo motor Load-side lead
MR-PWS1CBL □ M-A2-H		2	5	10	IP65	Long bending life	For HF-MP · HF-KP servo motor Opposite-to-load side lead
MR-PWS2CBL03M-A1-L	03				IP55	Standard	For HF-MP · HF-KP servo motor Load-side lead
MR-PWS2CBL03M-A2-L	03				IP55	Standard	For HF-MP · HF-KP servo motor Opposite-to-load side lead

(1) Connection of servo amplifier and servo motor

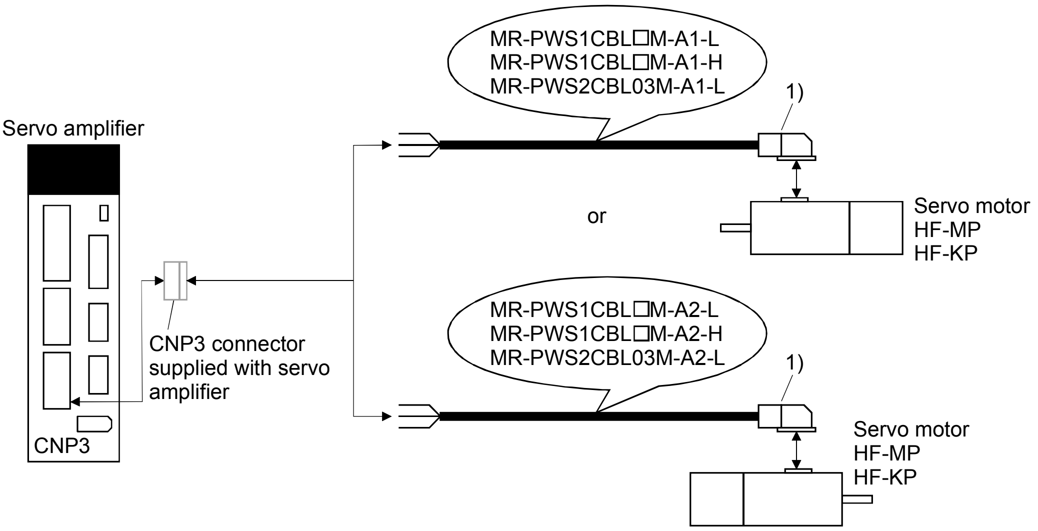

Cable model	1) Servo motor power side connector	
MR-PWS1CBL □ M-A1-L	Connector: JN4FT04SJ1-R Hood, socket insulator Bushing, ground nut Contact: ST-TMH-S-C1B-100-(A534G) Crimping tool: CT160-3-TMH5B (JAE)	Signal layout 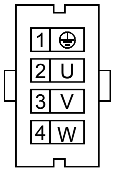 View seen from wiring side.
MR-PWS1CBL □ M-A2-L		
MR-PWS1CBL □ M-A1-H		
MR-PWS1CBL □ M-A2-H		
MR-PWS2CBL03M-A1-L	Connector: JN4FT04SJ2-R Hood, socket insulator Bushing, ground nut Contact: ST-TMH-S-C1B-100-(A534G) Crimping tool: CT160-3-TMH5B (JAE)	
MR-PWS2CBL03M-A2-L		

(2) Internal wiring diagram

MR-PWS1CBL□M-A1-L MR-PWS1CBL□M-A2-L
MR-PWS1CBL□M-A1-H MR-PWS1CBL□M-A2-H
MR-PWS2CBL03M-A1-L MR-PWS2CBL03M-A2-L

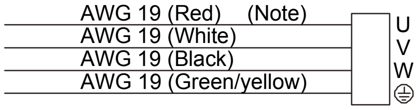

Note. These are not shielded cables.

14.1.4 Motor brake cables

These cables are motor brake cables for the HF-MP ▪ HF-KP series servo motors. The numerals in the Cable Length field of the table are the symbols entered in the □ part of the cable model. The cables of the lengths with the symbols are available.

Refer to section 4.11 when wiring.

Cable model	Cable length				IP rating	Bending life	Application
	0.3m	2m	5m	10m			
MR-PWS1CBL □ M-A1-L		2	5	10	IP65	Standard	For HF-MP ▪ HF-KP servo motor Load side lead
MR-PWS1CBL □ M-A2-L		2	5	10	IP65	Standard	For HF-MP ▪ HF-KP servo motor Opposite-to-load side lead
MR-PWS1CBL □ M-A1-H		2	5	10	IP65	Long bending life	For HF-MP ▪ HF-KP servo motor Load side lead
MR-PWS1CBL □ M-A2-H		2	5	10	IP65	Long bending life	For HF-MP ▪ HF-KP servo motor Opposite-to-load side lead
MR-PWS2CBL03M-A1-L	03				IP55	Standard	For HF-MP ▪ HF-KP servo motor Load side lead
MR-PWS2CBL03M-A2-L	03				IP55	Standard	For HF-MP ▪ HF-KP servo motor Opposite-to-load side lead

(1) Connection of servo amplifier and servo motor

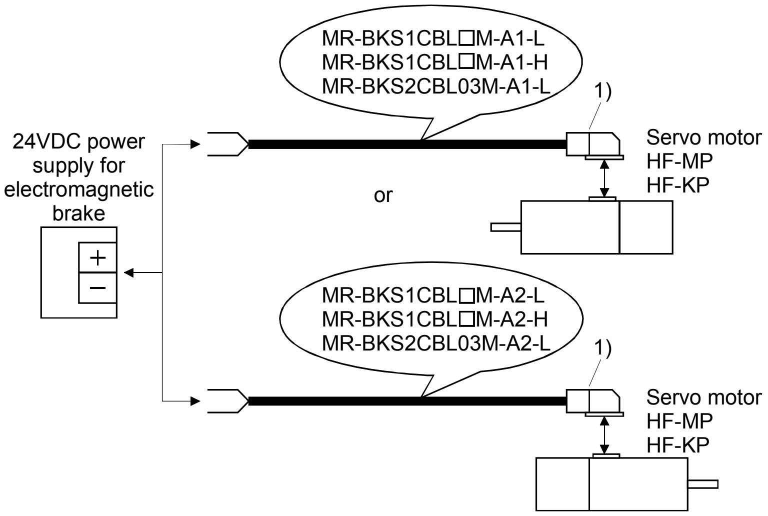

Cable model	1) Motor brake side connector	
MR-BKS1CBL □ M-A1-L	Connector: JN4FT02SJ1-R Hood, socket insulator Bushing, ground nut Contact: ST-TMH-S-C1B-100-(A534G) Crimping tool: CT160-3-TMH5B (JAE)	Signal layout 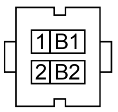 View seen from wiring side.
MR-BKS1CBL □ M-A2-L		
MR-BKS1CBL □ M-A1-H		
MR-BKS1CBL □ M-A2-H		
MR-BKS2CBL03M-A1-L	Connector: JN4FT02SJ2-R Hood, socket insulator Bushing, ground nut Contact: ST-TMH-S-C1B-100-(A534G) Crimping tool: CT160-3-TMH5B (JAE)	
MR-BKS2CBL03M-A2-L		

(2) Internal wiring diagram

MR-BKS1CBL□M-A1-L MR-BKS1CBL□M-A2-L
MR-BKS1CBL□M-A1-H MR-BKS1CBL□M-A2-H
MR-BKS2CBL03M-A1-L MR-BKS2CBL03M-A2-L

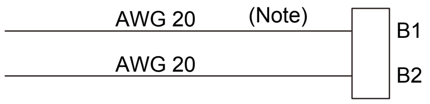

Note. These are not shielded cables.

14.2 Regenerative options

⚠CAUTION	· The specified combinations of regenerative options and servo amplifiers may only be used. Otherwise, a fire may occur.

(1) Combination and regenerative power

The power values in the table are resistor-generated powers and not rated powers.

Servo amplifier	Regenerative power[W]							
	Built-in regenerative resistor	MR-RB032 [40Ω]	MR-RB12 [40Ω]	MR-RB30 [13Ω]	MR-RB31 [6.7Ω]	MR-RB32 [40Ω]	(Note 1) MR-RB50 [13Ω]	(Note 1) MR-MB51 [6.7Ω]
MR-J3-10T (1)		30						
MR-J3-20T (1)	10	30	100					
MR-J3-40T (1)	10	30	100					
MR-J3-60T	10	30	100					
MR-J3-70T	20	30	100			300		
MR-J3-100T	20	30	100			300		
MR-J3-200TN	100			300			500	
MR-J3-350T	100			300			500	
MR-J3-500T	130				300			500
MR-J3-700T	170				300			500

Servo amplifier	Regenerative power[W]						
	Built-in regenerative resistor	MR-RB1H-4 [82Ω]	(Note 1) MR-RB3M-4 [120Ω]	(Note 1) MR-RB3G-4 [47Ω]	(Note 1) MR-RB5G-4 [47Ω]	(Note 1) MR-RB34-4 [26Ω]	(Note 1) MR-RB54-4 [26Ω]
MR-J3-60T4	15	100	300				
MR-J3-100T4	15	100	300				
MR-J3-200T4	100			300	500		
MR-J3-350T4	100			300	500		
MR-J3-500T4	130					300	500
MR-J3-700T4	170					300	500

Servo amplifier	(Note 2) Regenerative power[W]						
	External regenerative resistor (Accessory)	MR-RB5E [6Ω]	MR-RB9P [4.5Ω]	MR-RB9F [3Ω]	MR-RB6B-4 [20Ω]	MR-RB60-4 [12.5Ω]	MR-RB6K-4 [10Ω]
MR-J3-11KT	500 (800)	500 (800)					
MR-J3-15KT	850 (1300)		850 (1300)				
MR-J3-22KT	850 (1300)			850 (1300)			
MR-J3-11KT4	500 (800)				500 (800)		
MR-J3-15KT4	850 (1300)					850 (1300)	
MR-J3-22KT4	850 (1300)						850 (1300)

Note 1. Always install a cooling fan.

2. Values in parentheses assume the installation of a cooling fan.

(2) Selection of the regenerative option

Use the following method when regeneration occurs continuously in vertical motion applications or when it is desired to make an in-depth selection of the regenerative option.

(a) Regenerative energy calculation

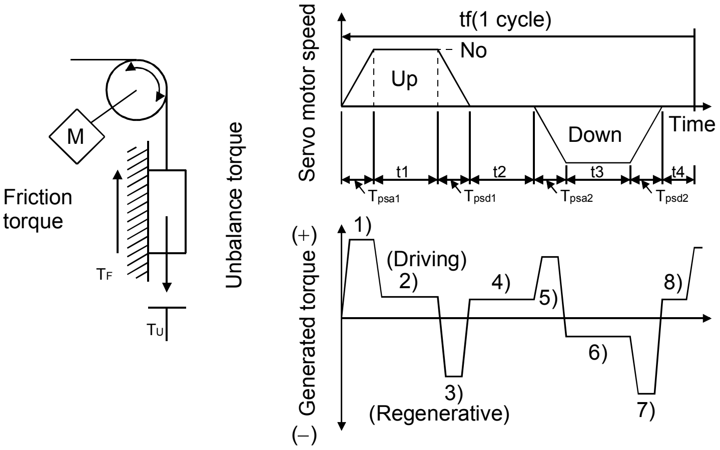

Formulas for calculating torque and energy in operation

Regenerative power	Torque applied to servo motor [N・m]	Energy [J]
1)	$T_1 = \frac{(J_L/\eta + J_M) \bullet N_0}{9.55 \times 10^4} \bullet \frac{1}{T_{psa1}} + T_U + T_F$	$E_1 = \frac{0.1047}{2} \cdot N_0 \cdot T_1 \cdot T_{psa1}$
2)	$T_2 = T_U + T_F$	$E_2 = 0.1047 \cdot N_0 \cdot T_2 \cdot t_1$
3)	$T_3 = \frac{-(J_L \bullet \eta + J_M) \bullet N_0}{9.55 \times 10^4} \bullet \frac{1}{T_{psd1}} + T_U + T_F$	$E_3 = \frac{0.1047}{2} \cdot N_0 \cdot T_3 \cdot T_{psd1}$
4), 8)	$T_4 = T_U$	$E_4 \geq 0$ (No regeneration)
5)	$T_5 = \frac{(J_L/\eta + J_M) \bullet N_0}{9.55 \times 10^4} \bullet \frac{1}{T_{psa2}} - T_U + T_F$	$E_5 = \frac{0.1047}{2} \cdot N_0 \cdot T_5 \cdot T_{psa2}$
6)	$T_6 = -T_U + T_F$	$E_6 = 0.1047 \cdot N_0 \cdot T_6 \cdot t_3$
7)	$T_7 = \frac{-(J_L \bullet \eta + J_M) \bullet N_0}{9.55 \times 10^4} \bullet \frac{1}{T_{psd2}} - T_U + T_F$	$E_7 = \frac{0.1047}{2} \cdot N_0 \cdot T_7 \cdot T_{psd2}$

From the calculation results in 1) to 8), find the absolute value (Es) of the sum total of negative energies.

(b) Losses of servo motor and servo amplifier in regenerative mode

The following table lists the efficiencies and other data of the servo motor and servo amplifier in the regenerative mode.

Servo amplifier	Inverse efficiency[%]	Capacitor charging[J]
MR-J3-10T	55	9
MR-J3-10T1	55	4
MR-J3-20T	70	9
MR-J3-20T1	70	4
MR-J3-40T	85	11
MR-J3-40T1	85	10
MR-J3-60T(4)	85	11
MR-J3-70T	80	18
MR-J3-100T	80	18
MR-J3-100T4	80	12

Servo amplifier	Inverse efficiency[%]	Capacitor charging[J]
MR-J3-200TN	85	40
MR-J3-200T4	85	25
MR-J3-350T	85	40
MR-J3-350T4	85	36
MR-J3-500T(4)	90	45
MR-J3-700T(4)	90	70
MR-J3-11KT(4)	90	120
MR-J3-15KT(4)	90	170
MR-J3-22KT(4)	90	250

Inverse efficiency (η) :Efficiency including some efficiencies of the servo motor and servo amplifier when rated (regenerative) torque is generated at rated speed. Since the efficiency varies with the speed and generated torque, allow for about 10%.

Capacitor charging (Ec) :Energy charged into the electrolytic capacitor in the servo amplifier.

Subtract the capacitor charging from the result of multiplying the sum total of regenerative energies by the inverse efficiency to calculate the energy consumed by the regenerative option.

$$ER\ [J] = \eta \cdot Es - Ec$$

Calculate the power consumption of the regenerative option on the basis of single-cycle operation period tf [s] to select the necessary regenerative option.

$$PR\ [W] = ER/tf$$

(3) Parameter setting

Set parameter No.PA02 according to the option to be used.

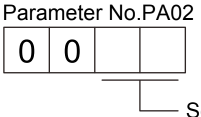

Selection of regenerative option

00: Regenerative option is not used
- For servo amplifier of 100W, regenerative resistor is not used.
- For servo amplifier of 200 to 7kW, built-in regenerative resistor is used.
- Supplied regenerative resistors or regenerative option is used with the servo amplifier of 11k to 22kW.

01: FR-BU2-(H)・FR-RC-(H)・FR-CV-(H)
02: MR-RB032
03: MR-RB12
04: MR-RB32
05: MR-RB30
06: MR-RB50(Cooling fan is required)
08: MR-RB31
09: MR-RB51(Cooling fan is required)
80: MR-RB1H-4
81: MR-RB3M-4(Cooling fan is required)
82: MR-RB3G-4(Cooling fan is required)
83: MR-RB5G-4(Cooling fan is required)
84: MR-RB34-4(Cooling fan is required)
85: MR-RB54-4(Cooling fan is required)
FA: When the supplied regenerative resistors or the regenerative option is cooled by the cooling fan to increase the ability with the servo amplifier of 11 k to 22 kW.

The following are setting values for regenerative resistor and regenerative option which are used with a servo amplifier of 11k to 22kW.

Regenerative resistor, regenerative option	Setting value
Standard supplied regenerative resistor	00
Standard supplied regenerative resistor (with a cooling fan to cool it)	FA
MR-RB5E	00
MR-RB5E (with a cooling fan to cool it)	FA
MR-RB9P	00
MR-RB9P (with a cooling fan to cool it)	FA
MR-RB9F	00
MR-RB9F (with a cooling fan to cool it)	FA
MR-RB6B-4	00
MR-RB6B-4 (with a cooling fan to cool it)	FA
MR-RB60-4	00
MR-RB60-4 (with a cooling fan to cool it)	FA
MR-RB6K-4	00
MR-RB6K-4 (with a cooling fan to cool it)	FA

(4) Connection of the regenerative option

POINT

- When the MR-RB50 · MR-RB51 · MR-RB3M-4 · MR-RB3G-4 · MR-RB5G-4 · MR-RB34-4 · MR-RB54-4 is used, a cooling fan is required to cool it. The cooling fan should be prepared by the customer.
- For the sizes of wires used for wiring, refer to section 14.9.

The regenerative option will cause a temperature rise of ＋100℃ relative to the ambient temperature. Fully examine heat dissipation, installation position, used cables, etc. before installing the option. For wiring, use flame-resistant cables and keep them clear of the regenerative option body. Always use twisted wires of max. 5m length for connection with the servo amplifier.

(a) MR-J3-350T or less · MR-J3-200T4 or less

Always remove the wiring from across P-D and fit the regenerative option across P-C.

The G3 and G4 terminals act as a thermal sensor. G3-G4 is disconnected when the regenerative option overheats abnormally.

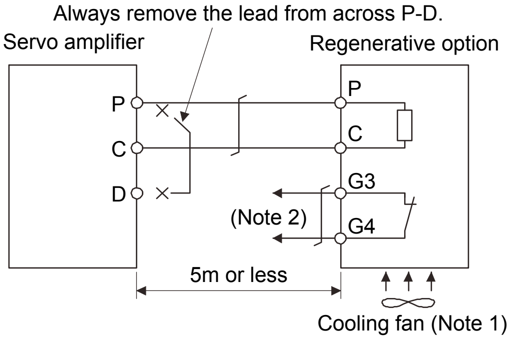

Note 1. When using the MR-RB50, MR-RB3M-4, MR-RB3G-4 or MR-RB5G-4, forcibly cool it with a cooling fan (92×92, minimum air flow : 1.0m^3).

2. Make up a sequence which will switch off the magnetic contactor when abnormal heating occurs.

G3-G4 contact specifications
Maximum voltage: 120VAC/DC
Maximum current: 0.5A/4.8VDC
Maximum capacity: 2.4VA

(b) MR-J3-350T4 · MR-J3-500T(4) · MR-J3-700T(4)

Always remove the wiring (across P-C) of the servo amplifier built-in regenerative resistor and fit the regenerative option across P-C.

The G3 and G4 terminals act as a thermal sensor. G3-G4 is opened when the regenerative option overheats abnormally.

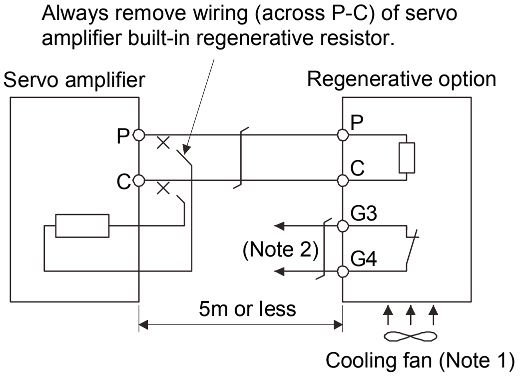

Note 1. When using the MR-RB51, MR-RB3G-4, MR-RB5G-4, MR-RB34-4 or MR-RB54-4, forcibly cool it with a cooling fan (92 × 92, minimum air flow : 1.0m^3).

2. Make up a sequence which will switch off the magnetic contactor when abnormal heating occurs.

G3-G4 contact specifications

Maximum voltage: 120V AC/DC

Maximum current: 0.5A/4.8VDC

Maximum capacity: 2.4VA

When using the regenerative option, remove the servo amplifier's built-in regenerative resistor wires (across P-C), fit them back to back, and secure them to the frame with the accessory screw as shown below.

Mounting method

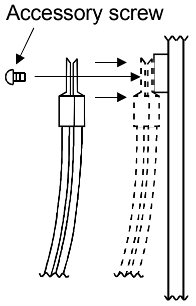

The drawing below shows the MR-J3-350T4 and MR-J3-500T(4). Refer to section 12.1 (6) Outline drawings for the position of the fixing screw for MR-J3-700T(4).

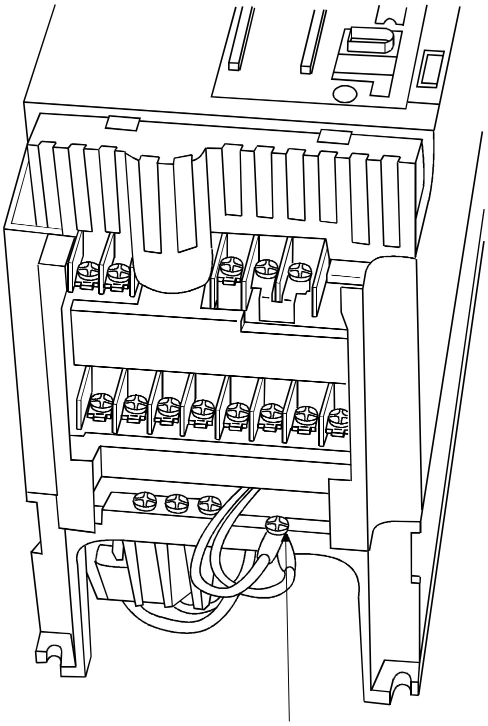

(c) MR-J3-11KT(4)(-LR) · MR-J3-15KT(4)(-LR) · MR-J3-22KT(4) (when using the supplied regenerative resistor)

⚠CAUTION	· The regenerative resistor supplied with 11kW to 22kW servo amplifiers does not have a protective cover. Touching the resistor (including wiring/screw hole area) may cause a burn injury and electric shock. Even if the power was shut-off, be careful until the bus voltage discharged and the temperature decreased because of the following reasons. · It may cause a burn injury due to very high temperature without cooling. · It may cause an electric shock due to charged capacitor of the servo amplifier.

When using the regenerative resistors supplied to the servo amplifier, the specified number of resistors (4 or 5 resistors) must be connected in series. If they are connected in parallel or in less than the specified number, the servo amplifier may become faulty and/or the regenerative resistors burn. Install the resistors at intervals of about 70mm. Cooling the resistors with two cooling fans (92×92, minimum air flow : 1.0m^3) improves the regeneration capability. In this case, set "□ □FA" in parameter No.PA02.

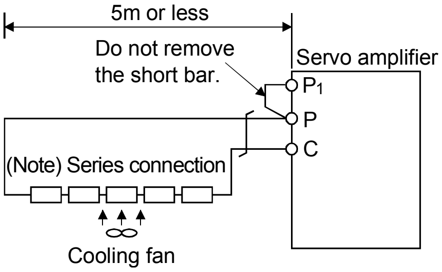

Note. The number of resistors connected in series depends on the resistor type. The thermal sensor is not mounted on the attached regenerative resistor. An abnormal heating of resistor may be generated at a regenerative circuit failure. Install a thermal sensor near the resistor and establish a protective circuit to shut off the main circuit power supply when abnormal heating occurs. The detection level of the thermal sensor varies according to the settings of the resistor. Set the thermal sensor in the most appropriate position on your design basis or use the thermal sensor built-in regenerative option (MR-RB5E, 9P, 9F, 6B-4, 60-4 and 6K-4).

Servo amplifier	Regenerative resistor	Regenerative power [W]		Resistance [Ω]	Number of resistors
		Normal	Cooling		
MR-J3-11KT	GRZG400-1.5Ω	500	800	6	4
MR-J3-11KT-LR	GRZG400-0.8Ω	500	800	3.2	4
MR-J3-15KT	GRZG400-0.9Ω	850	1300	4.5	5
MR-J3-15KT-LR MR-J3-22KT	GRZG400-0.6Ω	850	1300	3	5
MR-J3-11KT4	GRZG400-5.0Ω	500	800	20	4
MR-J3-11KT4-LR	GRZG400-2.5Ω	500	800	10	4
MR-J3-15KT4	GRZG400-2.5Ω	850	1300	12.5	5
MR-J3-15KT4-LR MR-J3-22KT4	GRZG400-2.0Ω	850	1300	10	5

(d) MR-J3-11KT(4)-PX/LW・MR-J3-15KT(4)-PX/LW・MR-J3-22KT(4)-PX (when using the regenerative option)

The MR-J3-11KT(4)-PX/LW・MR-J3-15KT(4)-PX/LW・MR-J3-22KT(4)-PX servo amplifiers are not supplied with regenerative resistors. When using any of these servo amplifiers, always use the MR-RB5E, 5R, 9P, 9F, 5K-4, 6B-4, 60-4, 6K-4 regenerative option.

The MR-RB5E, 5R, 9P, 9F, 5K-4, 6B-4, 60-4 and 6K-4 are regenerative options that have encased the GRZG400-1.5Ω, GRZG400-0.9Ω, GRZG400-0.8Ω, GRZG400-0.6Ω, GRZG400-5.0Ω, GRZG400-2.5Ω, GRZG400-2.0Ω respectively. When using any of these regenerative options, make the same parameter setting as when using the GRZG400-1.5Ω, GRZG400-0.9Ω, GRZG400-0.8Ω, GRZG400-0.6Ω, GRZG400-5.0Ω, GRZG400-2.5Ω, GRZG400-2.0Ω (supplied regenerative resistors or regenerative option is used with 11k to 22kW servo amplifier).

Cooling the regenerative option with cooling fans improves regenerative capability.

The G3 and G4 terminals are for the thermal protector. G3-G4 is opened when the regenerative option overheats abnormally.

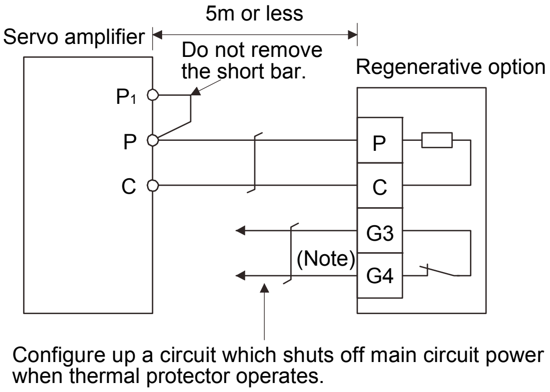

Note. Specifications of contact across G3-G4

Maximum voltage: 120V AC/DC

Maximum current: 0.5A/4.8VDC

Maximum capacity: 2.4VA

Servo amplifier	Regenerative option model	Resistance [Ω]	Regenerative power [W]	
			Without cooling fans	With cooling fans
MR-J3-11KT-PX	MR-RB5E	6	500	800
MR-J3-11KT-LW	MR-RB5R	3.2	500	800
MR-J3-15KT-PX	MR-RB9P	4.5	850	1300
MR-J3-15KT-LW MR-J3-22KT-PX	MR-RB9F	3	850	1300
MR-J3-11KT4-PX	MR-RB6B-4	20	500	800
MR-J3-11KT4-LW	MR-RB5K-4	10	500	800
MR-J3-15KT4-PX	MR-RB60-4	12.5	850	1300
MR-J3-15KT4-LW MR-J3-22KT4-PX	MR-RB6K-4	10	850	1300

When using cooling fans, install them using the mounting holes provided in the bottom of the regenerative option. In this case, set "□ □FA" in parameter No.PA02.

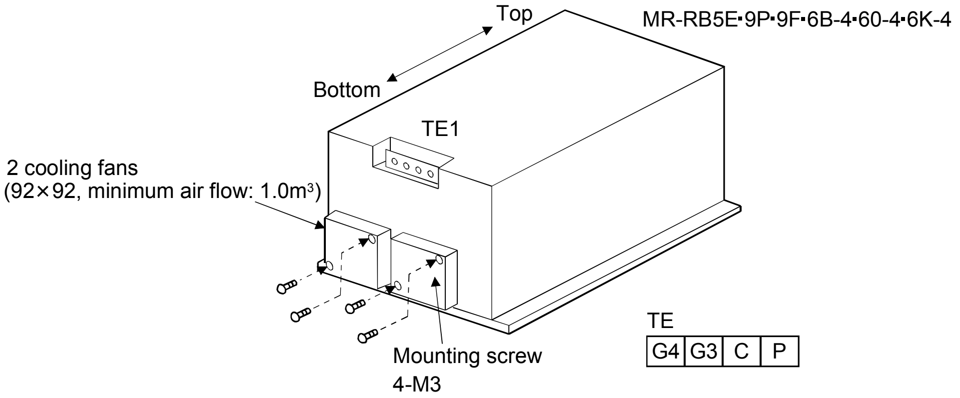

(5) Outline dimension drawings

(a) MR-RB12

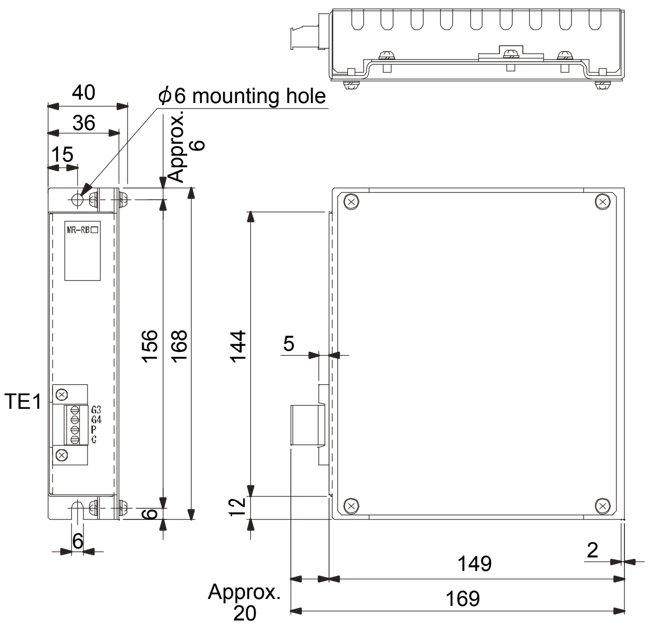

[Unit: mm]

･TE1

Terminal block

G3
G4
P
C

Applicable wire size: 0.2mm^2 to 2.5mm^2 (AWG24 to AWG12)

Tightening torque: 0.5 to 0.6 [N･m]

(4 to 5 [lb･in])

･Mounting screw

Screw size: M5

Tightening torque: 3.24 [N･m]

(28.7 [lb･in])

Mass: 1.1 [kg]

(b) MR-RB30 · MR-RB31 · MR-RB32 · MR-RB34-4 · MR-RB3M-4 · MR-RB3G-4

[Unit: mm]

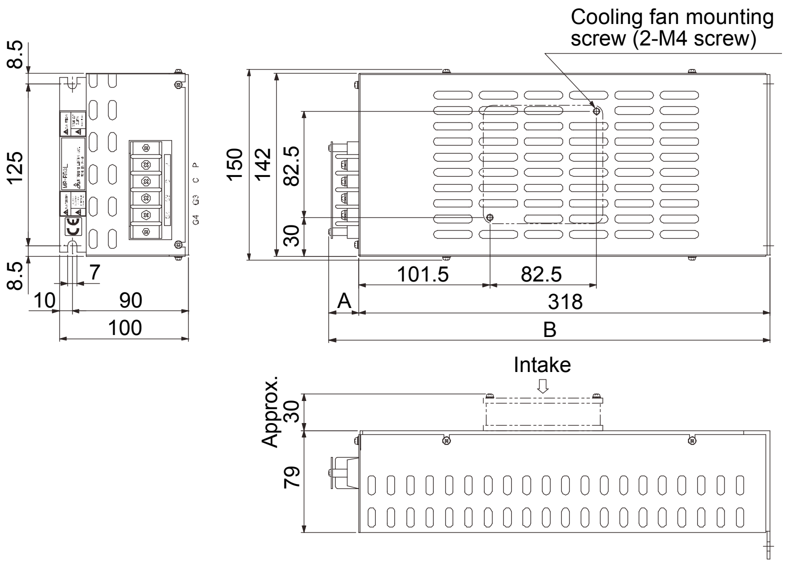

· TE1

Terminal block

P
C
G3
G4

Terminal screw: M4

Tightening torque: 1.2 [N · m] (10.62 [lb · in])

· Mounting screw

Screw size: M6

Tightening torque: 5.4 [N · m] (47.79 [lb · in])

Regenerative option	Variable dimensions		Mass [kg] (lb)
	A	B	
MR-RB30	17	335	2.9 (6.4)
MR-RB31			
MR-RB32			
MR-RB34-4	23	341	
MR-RB3M-4			
MR-RB3G-4			

(c) MR-RB50 · MR-RB51 · MR-RB54-4 · MR-RB5G-4

[Unit: mm]

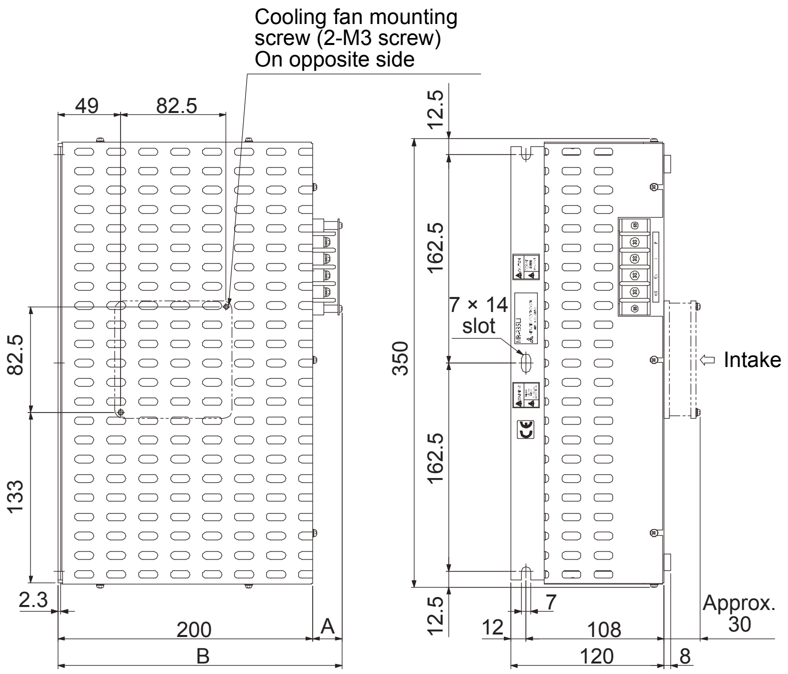

· Terminal block

P
C
G3
G4

Terminal screw: M4

Tightening torque: 1.2 [N · m] (10.62 [lb · in])

· Mounting screw

Screw size: M6

Tightening torque: 5.4 [N · m] (47.79 [lb · in])

Regenerative option	Variable dimensions		Mass [kg] (lb)
	A	B	
MR-RB50	17	217	5.6 (12.3)
MR-RB51			
MR-RB54-4	23	233	
MR-RB5G-4			

(d) MR-RB5E · MR-RB9P · MR-RB9F · MR-RB6B-4 · MR-RB60-4 · MR-RB6K-4

[Unit: mm]

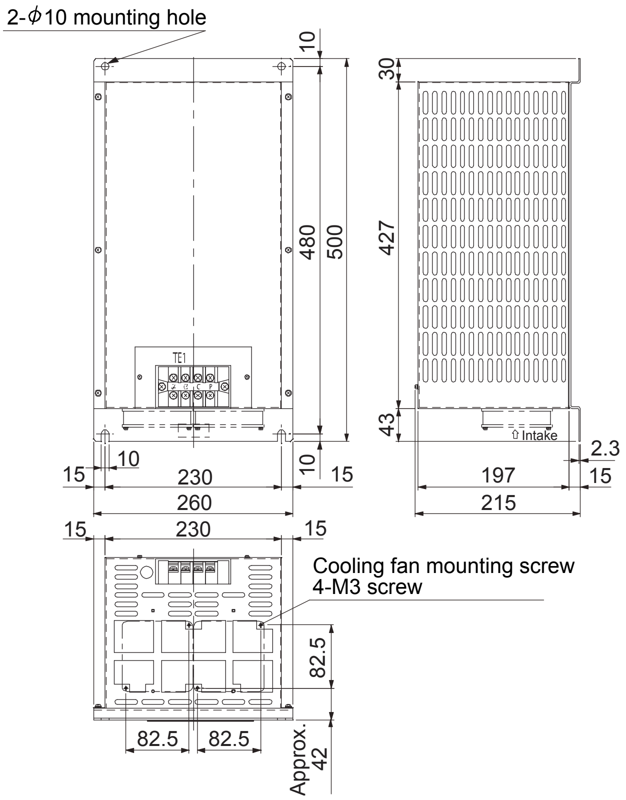

- Terminal block

G4	G3	C	P

Terminal screw: M5

Tightening torque: 2.0 [N · m] (17.70 [lb · in])

- Mounting screw

Screw size: M8

Tightening torque: 13.2 [N · m] (116.83 [lb · in])

Regenerative option	Mass	
	[kg]	[lb]
MR-RB5E	10	22.0
MR-RB9P	11	24.3
MR-RB9F	11	24.3
MR-RB6B-4	10	22.0
MR-RB60-4	11	24.3
MR-RB6K-4	11	24.3

(e) GRZG400-1.5Ω · GRZG400-0.9Ω · GRZG400-0.6Ω · GRZG400-5.0Ω · GRZG400-2.5Ω · GRZG400-2.0Ω (standard accessories)

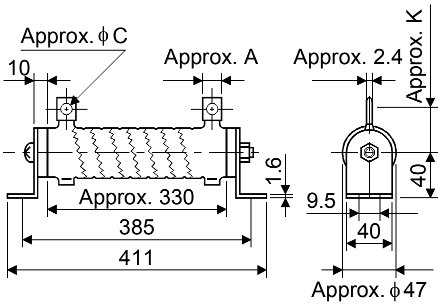

Regenerative resistor	Variable dimensions			Mounting screw size	Tightening torque [N · m] ([lb·in])	Mass [kg] ([lb])
	A	C	K			
GRZG400-1.5Ω	10	5.5	39	M8	13.2 (116.83)	0.8 (1.76)
GRZG400-0.9Ω						
GRZG400-0.6Ω	16	8.2	46			
GRZG400-5.0Ω	10	5.5	39			
GRZG400-2.5Ω						
GRZG400-2.0Ω						

(f) MR-RB1H-4

[Unit: mm]

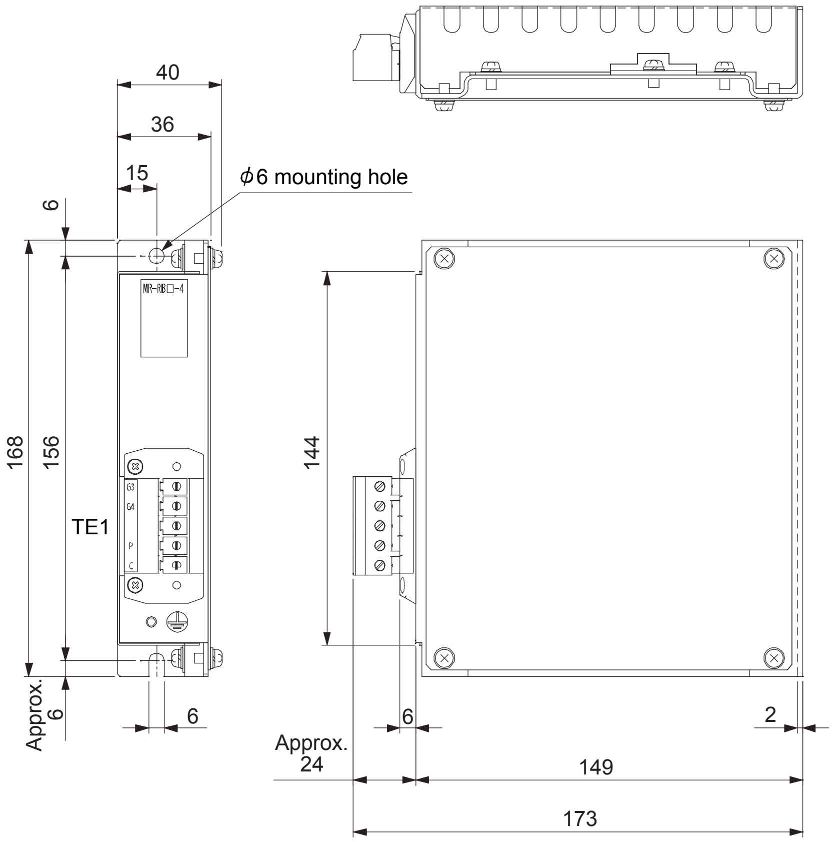

- Terminal pin assignment

G3
G4
P
C

Applicable wire size: AWG24 to AWG10

Tightening torque: 0.5 to 0.6 [N・m]

(4.43 to 5.31 [lb・in])

- Mounting screw

Screw size: M5

Tightening torque: 3.24 [N・m]

Mass: 1.1 [kg]

(g) MR-RB032

[Unit: mm]

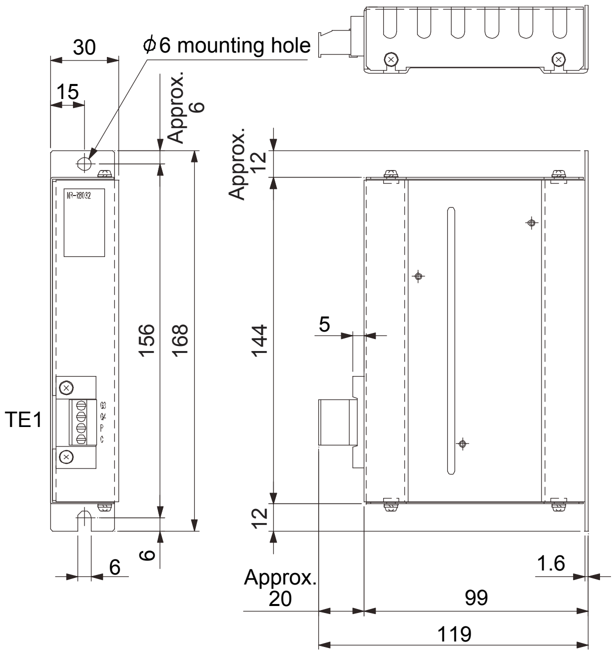

- TE1 terminal block

G3
G4
P
C

Applicable wire size: 0.2mm^2 to 2.5mm^2

(AWG24 to AWG12)

Tightening torque: 0.5 to 0.6 [N・m]

(4.43 to 5.31 [lb・in])

- Mounting screw

Screw size: M5

Tightening torque: 3.24 [N・m]

(28.7 [lb・in])

Mass: 0.5 [kg]

14.3 FR-BU2-(H) brake unit

POINT

- Use a 200V class brake unit and a resistor unit with a 200V class servo amplifier, and a 400V class brake unit and a resistor unit with a 400V class servo amplifier. Combination of different voltage class units and servo amplifier cannot be used.
- Install a brake unit and a resistor unit on a flat surface vertically. When the unit is installed horizontally or diagonally, the heat dissipation effect diminishes.
- Temperature of the resistor unit case rises to higher than 100℃. Keep cables and flammable materials away from the case.
- Ambient temperature condition of the brake unit is between －10℃ (14℉) and ＋50℃ (122℉). Note that the condition is different from the ambient temperature condition of the servo amplifier (between 0℃ (32℉) and ＋55℃ (131℉)).
- Configure the circuit to shut down the power-supply with the alarm output of the brake unit and resistor unit under abnormal condition.
- Use the brake unit with a combination indicated in section 14.3.1.
- For executing a continuous regenerative operation, use FR-RC-(H) power regeneration converter or FR-CV-(H) power regeneration common converter.
- Brake unit and regenerative options (Regenerative resistor) cannot be used simultaneously.

Connect the brake unit to the bus of the servo amplifier. As compared to the MR-RB regenerative option, the brake unit can return larger power. Use the brake unit when the regenerative option cannot provide sufficient regenerative capability.
When using the brake unit, set the parameter No.PA02 of the servo amplifier to "□□01".
When using the brake unit, always refer to the FR-BU2-(H) Brake Unit Instruction Manual.

14.3.1 Selection

Use a combination of servo amplifier, brake unit and resistor unit listed below.

Brake unit		Resistor unit	Number of connected units	Permissible continuous power [kW]	Total resistance [Ω]	Applicable servo amplifier (Note 2)
200V class	FR-BU2-15K	FR-BR-15K	1	0.99	8	MR-J3-500A/B/T (Note 1)
			2 (parallel)	1.98	4	MR-J3-500T MR-J3-700T MR-J3-11KT MR-J3-15KT
	FR-BU2-30K	FR-BR-30K	1	1.99	4	MR-J3-500T MR-J3-700T MR-J3-11KT MR-J3-15KT
	FR-BU2-55K	FR-BR-55K	1	3.91	2	MR-J3-11KT MR-J3-15KT MR-J3-22KT
		MT-BR5-55K	1	5.5	2	MR-J3-22KT
400V class	FR-BU2-H30K	FR-BR-H30K	1	1.99	16	MR-J3-500T4 MR-J3-700T4 MR-J3-11KT4
	FR-BU2-H55K	FR-BR-H55K	1	3.91	8	MR-J3-11KT4 MR-J3-15KT4 MR-J3-22KT4
	FR-BU2-H75K	MT-BR5-H75K	1	7.5	6.5	MR-J3-22KT4

Note 1. The combination is limited only when using with the servo motors HC-LP302, HC-RP353, HA-LP502 or HC-UP352.

2. When using capacity selection software to select a brake unit, brake units other than these combinations may be displayed. Refer to the combinations displayed on the capacity selection software for details.

14.3.2 Brake unit parameter setting

Normally, when using the FR-BU2-(H), changing parameters is not necessary. Whether a parameter can be changed or not is listed below.

Parameter		Change possible/ impossible	Remarks
No.	Name		
0	Brake mode switchover	Impossible	Do not change the parameter.
1	Monitor display data selection	Possible	Refer to the FR-BU2-(H) Brake Unit Instruction Manual.
2	Input terminal function selection 1	Impossible	Do not change the parameter.
3	Input terminal function selection 2		
77	Parameter write selection		
78	Cumulative energization time carrying-over times		
CLr	Parameter clear		
ECL	Alarm history clear		
C1	For manufacturer setting		

14.3.3 Connection example

POINT

- Connecting PR terminal of the brake unit to P terminal of the servo amplifier results in brake unit malfunction. Always connect the PR terminal of the brake unit to the PR terminal of the resistor unit.

(1) Combination with FR-BR-(H) resistor unit

(a) When connecting a brake unit to a servo amplifier

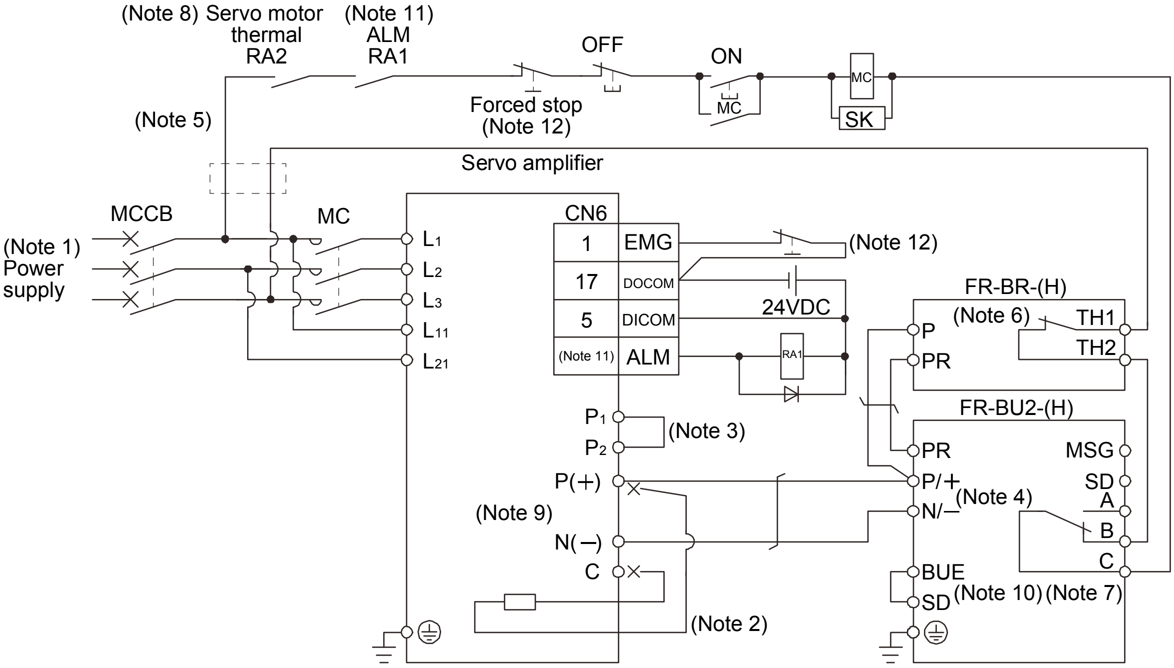

Note 1. For power supply specifications, refer to section 1.2.

2. For the servo amplifier of 5k and 7kW, always disconnect the lead of built-in regenerative resistor, which is connected to the P and C terminals. For the servo amplifier of 11k to 22kW, do not connect a supplied regenerative resistor to the P and C terminals.
3. Always connect P_1 and P_2 terminals (P_1 and P for the servo amplifier of 11k to 22kW) (Factory-wired). When using the power factor improving DC reactor, refer to section 14.11.
4. Connect the P/＋ and N/－ terminals of the brake unit to a correct destination. Wrong connection results in servo amplifier and brake unit malfunction.
5. For 400VAC class, a step-down transformer is required.
6. Contact rating: 1b contact, 110VAC_5A/220VAC_3A
   Normal condition: TH1-TH2 is conducting. Abnormal condition: TH1-TH2 is not conducting.
7. Contact rating: 230VAC_0.3A/30VDC_0.3A
   Normal condition: B-C is conducting/A-C is not conducting. Abnormal condition: B-C is not conducting/A-C is conducting.
8. For the servo motor with thermal sensor, connect the thermal sensor of the servo motor.
9. Do not connect more than one cable to each P(＋) to N(－) terminals of the servo amplifier.
10. Always connect BUE and SD terminals (Factory-wired).
11. The diagram is for when outputting the malfunction (ALM) is enabled by changing the parameter. If disabling malfunction (ALM) output, configure the power supply circuit which switches off the magnetic contactor after detection of alarm occurrence on the controller side.
12. Configure the circuit which shuts off main circuit power with external sequence at forced stop (EMG) off.

(b) When connecting two brake units to a servo amplifier

POINT

- To use brake units with a parallel connection, use two sets of FR-BU2 brake unit. Combination with other brake unit results in alarm occurrence or malfunction.
- Always connect the master and slave terminals (MSG and SD) of the two brake units.
- Do not connect the servo amplifier and brake units as below. Connect the cables with a terminal block to distribute as indicated in this section.

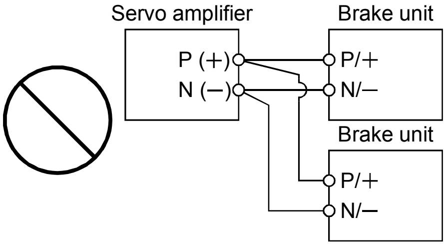

Connecting two cables to P and N terminals

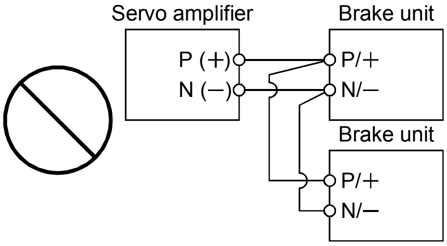

Passing wiring

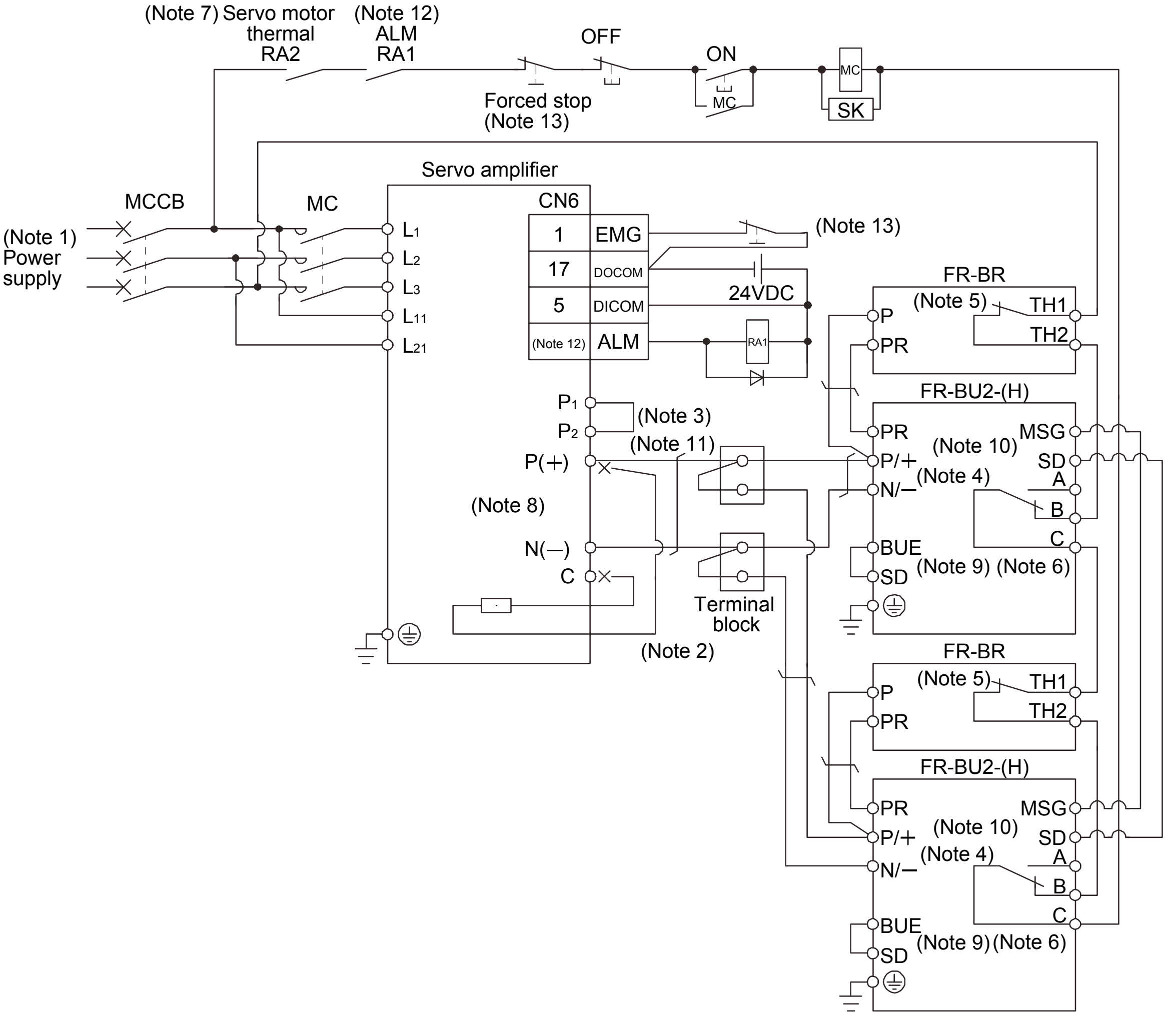

Note 1. For power supply specifications, refer to section 1.2.

2. For the servo amplifier of 5k and 7kW, always disconnect the lead of built-in regenerative resistor, which is connected to the P and C terminals. For the servo amplifier of 11k and 15kW, do not connect a supplied regenerative resistor to the P and C terminals.
3. Always connect P_1 and P_2 terminals (P_1 and P for the servo amplifier of 11k and 15kW) (Factory-wired). When using the power factor improving DC reactor, refer to section 14.11.
4. Connect the P/＋ and N/－ terminals of the brake unit to a correct destination. Wrong connection results in servo amplifier and brake unit malfunction.
5. Contact rating: 1b contact, 110VAC_5A/220VAC_3A
   Normal condition: TH1-TH2 is conducting. Abnormal condition: TH1-TH2 is not conducting.
6. Contact rating: 230VAC_0.3A/30VDC_0.3A
   Normal condition: B-C is conducting/A-C is not conducting. Abnormal condition: B-C is not conducting/A-C is conducting.
7. For the servo motor with thermal sensor, connect the thermal sensor of the servo motor.
8. Do not connect more than one cable to each P and N terminals of the servo amplifier.
9. Always connect BUE and SD terminals (Factory-wired).
10. Connect the MSG and SD terminals of the brake unit to a correct destination. Wrong connection results in servo amplifier and brake unit malfunction.
11. For the cable to connect the terminal block and the P and N terminals of the servo amplifier, use the cable indicated in (4) (b) in this section.
12. The diagram is for when outputting the malfunction (ALM) is enabled by changing the parameter. If disabling malfunction (ALM) output, configure the power supply circuit which switches off the magnetic contactor after detection of alarm occurrence on the controller side.
13. Configure the circuit which shuts off main circuit power with external sequence at forced stop (EMG) off.

(2) Combination with MT-BR5-(H) resistor unit

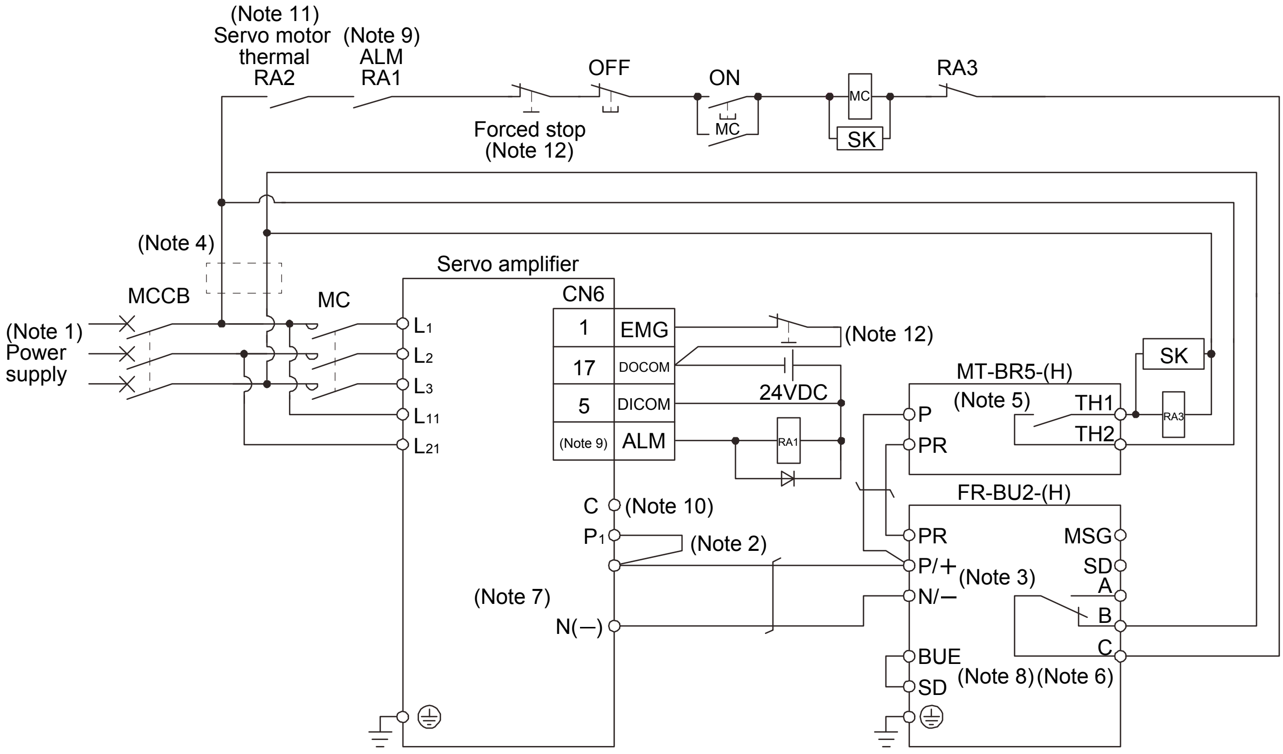

Note 1. For power supply specifications, refer to section 1.2.

2. Always connect P1 and P(+) terminals (Factory-wired). When using the power factor improving DC reactor, refer to section 14.11.
3. Connect the P/+ and N/− terminals of the brake unit to a correct destination. Wrong connection results in servo amplifier and brake unit malfunction.
4. For the servo amplifier of 400V class, a step-down transformer is required.
5. Contact rating: 1a contact, 110VAC_5A/220VAC_3A
   Normal condition: TH1-TH2 is not conducting. Abnormal condition: TH1-TH2 is conducting.
6. Contact rating: 230VAC_0.3A/30VDC_0.3A
   Normal condition: B-C is conducting/A-C is not conducting. Abnormal condition: B-C is not conducting/A-C is conducting.
7. Do not connect more than one cable to each P(+) and N(−) terminals of the servo amplifier.
8. Always connect BUE and SD terminals (Factory-wired).
9. The diagram is for when outputting the malfunction (ALM) is enabled by changing the parameter. If disabling malfunction (ALM) output, configure the power supply circuit which switches off the magnetic contactor after detection of alarm occurrence on the controller side.
10. For the servo amplifier of 22kW, do not connect a supplied regenerative resistor to the P and C terminals.
11. For the servo motor with thermal sensor, connect the thermal sensor of the servo motor.
12. Configure the circuit which shuts off main circuit power with external sequence at forced stop (EMG) off.

(3) Precautions for wiring

The cables between the servo amplifier and the brake unit, and between the resistor unit and the brake unit should be as short as possible. Always twist the cable longer than 5m (twist five times or more per one meter). Even when the cable is twisted, the cable should be less than 10m. Using cables longer than 5m without twisting or twisted cables longer than 10m, may result in the brake unit malfunction.

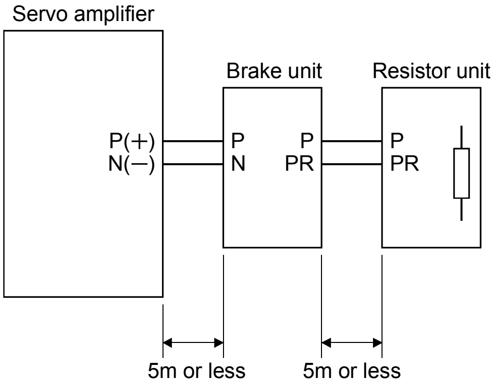

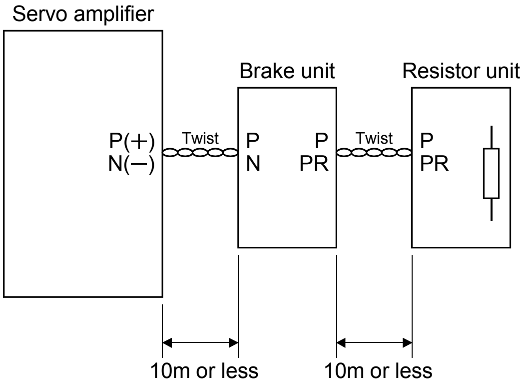

(4) Cables

(a) Cables for the brake unit

For the brake unit, HIV wire (600V Grade heat-resistant polyvinyl chloride insulated wire) is recommended.

1) Main circuit terminal

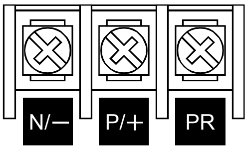

Terminal block

Brake unit		Main circuit terminal screw size	Crimping terminal	Tightening torque [N・m] ([lb・in])	Wire size	
					N/−, P/+, PR, ⏚	
			N/−, P/+, PR, ⏚		HIV wire [mm^2]	AWG
200V class	FR-BU2-15K	M4	5.5-4	1.5(13.3)	3.5	12
	FR-BU2-30K	M5	5.5-5	2.5(22.1)	5.5	10
	FR-BU2-55K	M6	14-6	4.4(38.9)	14	6
400V class	FR-BU2-H30K	M4	5.5-4	1.5(13.3)	3.5	12
	FR-BU2-H55K	M5	5.5-5	2.5(22.1)	5.5	10
	FR-BU2-H75K	M6	14-6	4.4(38.9)	14	6

2) Control circuit terminal

POINT

- Undertightening can cause a cable disconnection or malfunction. Overtightening can cause a short circuit or malfunction due to damage to the screw or the brake unit.

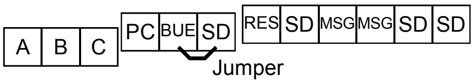

Terminal block

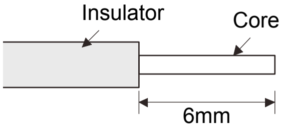

Wire the stripped cable after twisting to prevent the cable from becoming loose. In addition, do not solder it.

Screw size: M3

Tightening torque: 0.5N・m to 0.6N・m

Wire size: 0.3mm^2 to 0.75 mm^2

Screw driver: Small flat-blade screwdriver
(Tip thickness: 0.4mm/Tip width 2.5mm)

(b) Cables for connecting the servo amplifier and a distribution terminal block when connecting two sets of the brake unit

Brake unit	Wire size	
	HIV wire [mm^2]	AWG
FR-BU2-15K	8	8

(5) Crimping terminals for P and N terminals of servo amplifier

(a) Recommended crimping terminals

POINT

・Always use recommended crimping terminals or equivalent since some crimping terminals cannot be installed depending on the size.

	Servo amplifier	Brake unit	Number of connected units	Crimping terminal (Manufacturer)	(Note 1) Applicable tool
200V class	MR-J3-500T	FR-BU2-15K	1	FVD5.5-S4(Japan Solderless Terminal)	c
			2	8-4NS(Japan Solderless Terminal) (Note 2)	d
		FR-BU2-30K	1	FVD5.5-S4(Japan Solderless Terminal)	c
	MR-J3-700T	FR-BU2-15K	2	8-4NS(Japan Solderless Terminal) (Note 2)	d
		FR-BU2-30K	1	FVD5.5-S4(Japan Solderless Terminal)	c
	MR-J3-11KT	FR-BU2-15K	2	FVD8-6(Japan Solderless Terminal)	a
		FR-BU2-30K	1	FVD5.5-6(Japan Solderless Terminal)	c
		FR-BU2-55K	1	FVD14-6(Japan Solderless Terminal)	b
	MR-J3-15KT	FR-BU2-15K	2	FVD8-6(Japan Solderless Terminal)	a
		FR-BU2-30K	1	FVD5.5-6(Japan Solderless Terminal)	c
		FR-BU2-55K	1	FVD14-6(Japan Solderless Terminal)	b
	MR-J3-22KT	FR-BU2-55K	1	FVD14-8(Japan Solderless Terminal)	b
400V class	MR-J3-500T4	FR-BU2-H30K	1	FVD5.5-S4(Japan Solderless Terminal)	c
	MR-J3-700T4	FR-BU2-H30K	1	FVD5.5-S4(Japan Solderless Terminal)	c
	MR-J3-11KT4	FR-BU2-H30K	1	FVD5.5-6(Japan Solderless Terminal)	c
		FR-BU2-H55K	1	FVD5.5-6(Japan Solderless Terminal)	c
	MR-J3-15KT4	FR-BU2-H55K	1	FVD5.5-6(Japan Solderless Terminal)	c
	MR-J3-22KT4	FR-BU2-H55K	1	FVD5.5-8(Japan Solderless Terminal)	c
		FR-BU2-H75K	1	FVD14-8(Japan Solderless Terminal)	b

Note 1. Symbols in the applicable tool field indicate applicable tools in (5)(b) in this section.

2. Coat the crimping part with an insulation tube.

(b) Applicable tool

Symbol	Servo amplifier side crimping terminals				
	Crimping terminal	Applicable tool			Manufacturer
		Body	Head	Dice	
a	FVD8-6	YF-1・E-4	YNE-38	DH-111・DH121	Japan Solderless Terminal
b	FVD14-6 FVD14-8	YF-1・E-4	YNE-38	DH-112・DH122	
c	FDV5.5-S4 FDV5.5-6	YNT-1210S			
d	8-4NS	YHT-8S			

14.3.4 Outline dimension drawings

(1) FR-BU2- (H) brake unit

[Unit: mm]

FR-BU2-15K

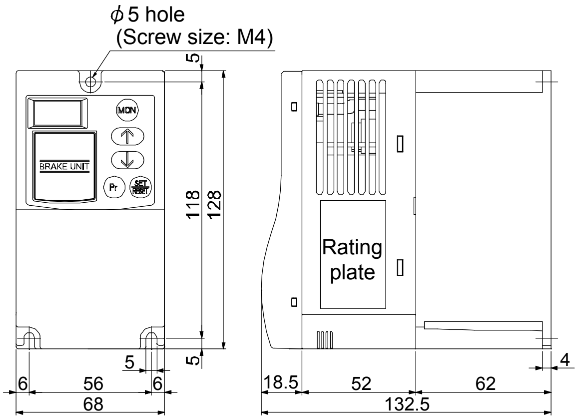

FR-BU2-30K
FR-BU2-H30K

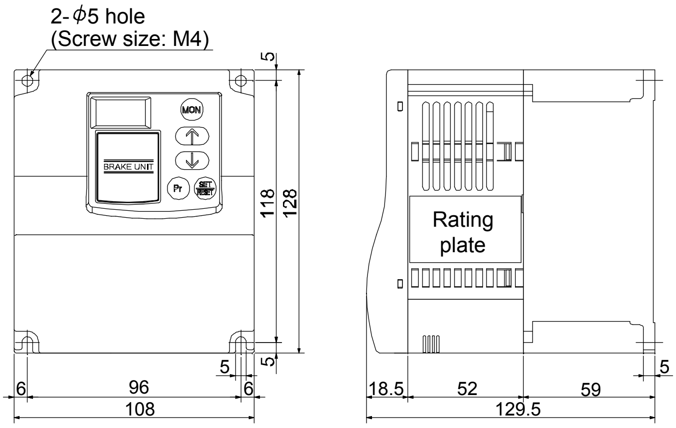

FR-BU2-55K
FR-BU2-H55K, H75K

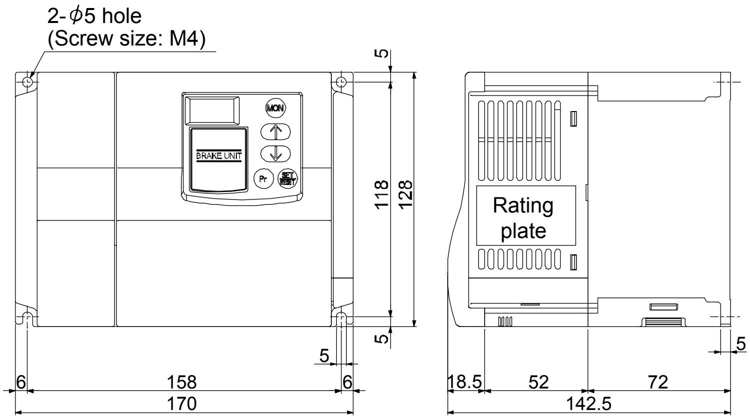

(2) FR-BR- (H) resistor unit

[Unit: mm]

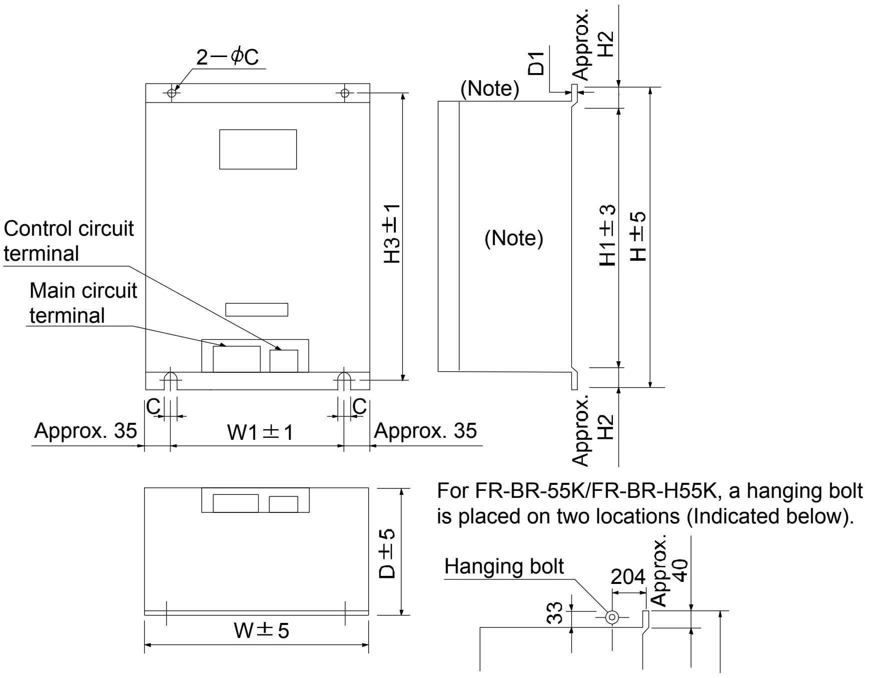

For FR-BR-55K/FR-BR-H55K, a hanging bolt is placed on two locations (Indicated below).

Note. Ventilation ports are provided on both sides and the top. The bottom is open.

Resistor unit		W	W1	H	H1	H2	H3	D	D1	C	Approximate mass [kg]([lb])
200V class	FR-BR-15K	170	100	450	410	20	432	220	3.2	6	15(33.1)
	FR-BR-30K	340	270	600	560	20	582	220	4	10	30(66.1)
	FR-BR-55K	480	410	700	620	40	670	450	3.2	12	70(154)
400V class	FR-BR-H30K	340	270	600	560	20	582	220	4	10	30(66.1)
	FR-BR-H55K	480	410	700	620	40	670	450	3.2	12	70(154)

(3) MT-BR5- (H) resistor unit

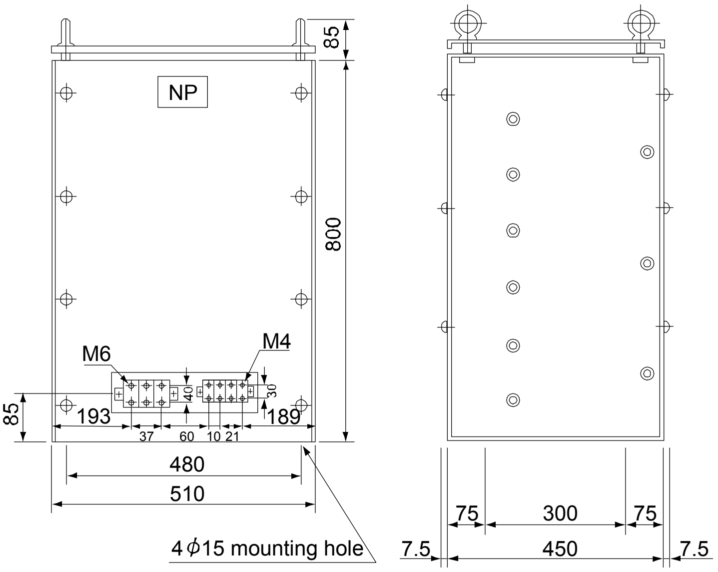

[Unit: mm]

Resistor unit		Resistance value	Approximate mass [kg]([lb])
200V class	MT-BR5-55K	2.0Ω	50(110)
400V class	MT-BR5-H75K	6.5Ω	70(154)

14.4 FR-RC-(H) power regeneration converter

POINT

- When using the FR-RC-(H) power regeneration converter, refer to "Power Regeneration Converter FR-RC Instruction Manual (IB(NA)66330)".

When using the FR-RC-(H) power regeneration converter, set "□□ 01" in parameter No.PA02.

(1) Selection

The converters can continuously return 75% of the nominal regenerative power. They are applied to the servo amplifiers of the 5k to 22kW.

Power regeneration converter	Nominal regenerative power (kW)	Servo amplifier
FR-RC-15K	15	MR-J3-500T MR-J3-700T MR-J3-11KT MR-J3-15KT
FR-RC-30K	30	
FR-RC-55K	55	MR-J3-22KT
FR-RC-H15K	15	MR-J3-500T4 MR-J3-700T4
FR-RC-H30K	30	MR-J3-11KT4 MR-J3-15KT4
FR-RC-H55K	55	MR-J3-22KT4

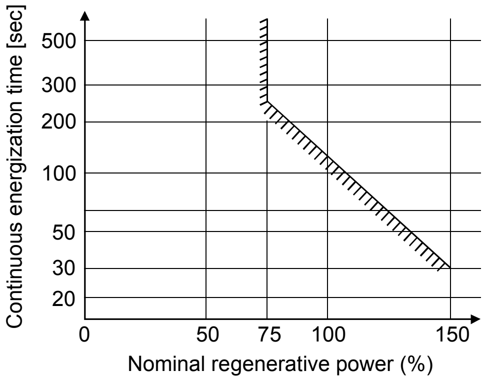

(2) Connection example

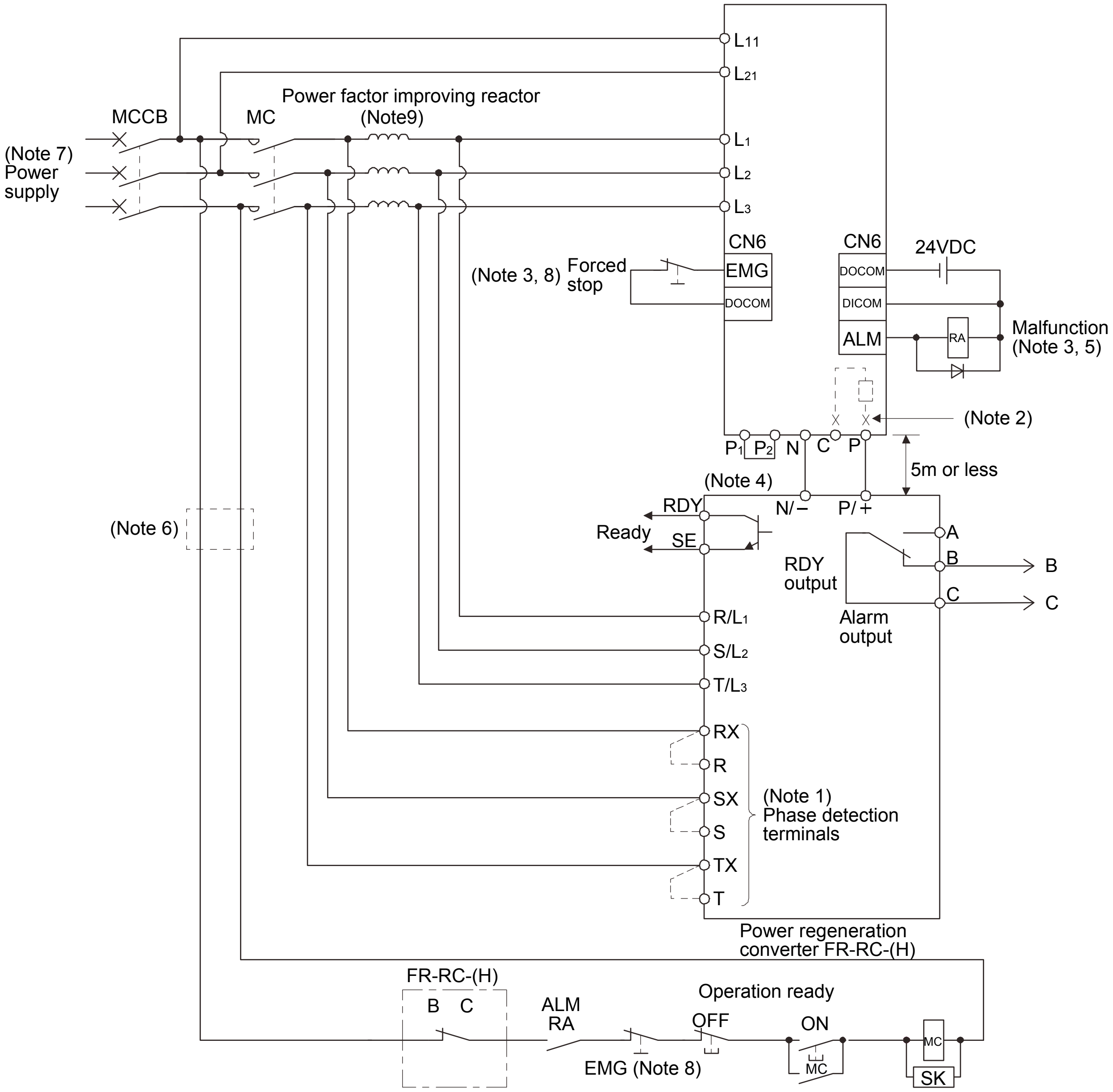

Note 1. When not using the phase detection terminals, fit the jumpers across RX-R, SX-S and TX-T. If the jumpers remain removed, the FR-RC-(H) will not operate.

2. When using servo amplifiers of 5kW and 7kW, always remove the lead of built-in regenerative resistor connected to P terminal and C terminal.

3. For sink input-output interface. Refer to section 4.8.3 for source input-output interface.

4. P_1 and P_2 are connected by default.

5. The diagram is for when outputting the malfunction (ALM) is enabled by changing the parameter. If disabling malfunction (ALM) output, configure the power supply circuit which switches off the magnetic contactor after detection of alarm occurrence on the controller side.

6. Stepdown transformer is required for coil voltage of magnetic contactor more than 200V class in 400V class servo amplifiers.

7. Refer to section 1.2 for the power supply specification.

8. Configure the circuit which shuts off main circuit power with external sequence at forced stop (EMG) off.

9. For the selection of the power factor improving AC reactor, refer to "Power Regeneration Converter FR-RC Instruction Manual (IB(NA)66330)".

(3) Outside dimensions of the power regeneration converters

[Unit : mm]

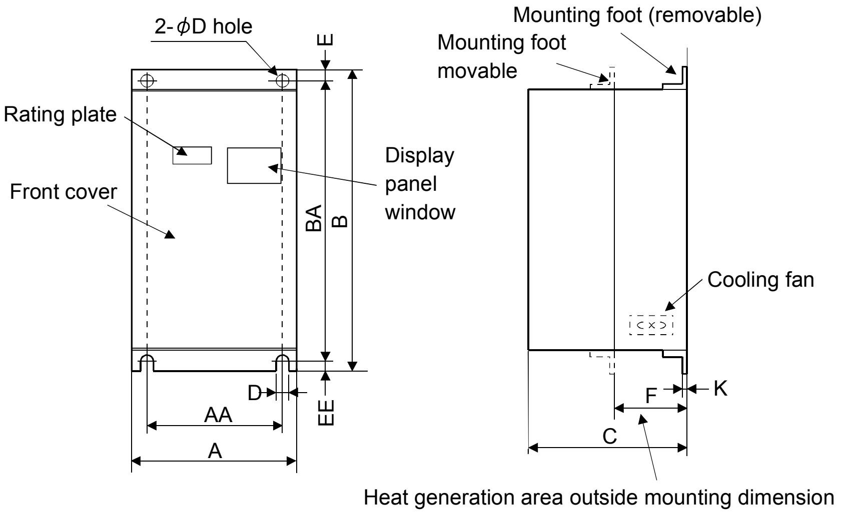

Power regeneration converter	A	AA	B	BA	C	D	E	EE	K	F	Approx. mass [kg(lb)]
FR-RC-15K	270	200	450	432	195	10	10	8	3.2	87	19 (41.888)
FR-RC-H15K	340	270	600	582	195	10	10	8	3.2	90	31 (68.343)
FR-RC-30K											
FR-RC-H30K											
FR-RC-55K	480	410	700	670	250	12	15	15	3.2	135	55 (121.3)
FR-RC-H55K											

(4) Mounting hole machining dimensions

When the power regeneration converter is fitted to a totally enclosed type box, mount the heat generating area of the converter outside the box to provide heat generation measures. At this time, the mounting hole having the following dimensions is machined in the box.

[Unit : mm]

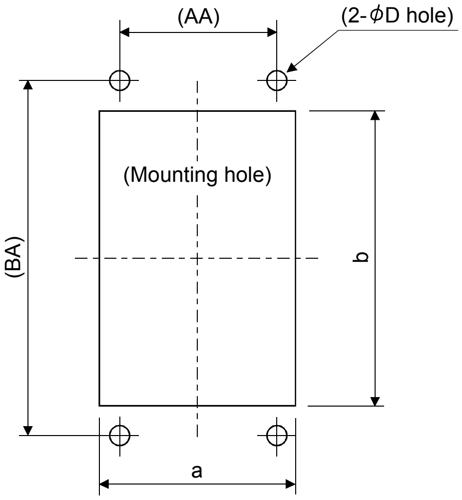

Power regeneration converter	a	b	D	AA	BA
FR-RC-15K	260	412	10	200	432
FR-RC-H15K	330	562	10	270	582
FR-RC-30K					
FR-RC-H30K					
FR-RC-55K	470	642	12	410	670
FR-RC-H55K					

14.5 Power regeneration common converter

POINT

- Use the FR-CV for the servo amplifier of 200V class and the FR-CV-H for that of 400V class.
- For details of the power regeneration common converter FR-CV-(H), refer to the FR-CV-(H) Installation Guide (IB(NA)0600075).
- Do not supply power to the main circuit power supply terminals (L_1, L_2, L_3) of the servo amplifier. Doing so will fail the servo amplifier and FR-CV-(H).
- Connect the DC power supply between the FR-CV-(H) and servo amplifier with correct polarity. Connection with incorrect polarity will fail the FR-CV-(H) and servo amplifier.
- Two or more FR-CV-(H)'s cannot be installed to improve regeneration capability. Two or more FR-CV-(H)'s cannot be connected to the same DC power supply line.

When using the power regeneration common converter, set parameter No.PA02 to "□□01".

(1) Model

FR－CV－□□

Capacity

Symbol	Capacity [kW]
7.5K	7.5
11K	11
15K	15
22K	22
30K	30
37K	37
55K	55

Symbol	Voltage class
None	200V class
H	400V class

(2) Selection

The power regenerative common converter FR-CV can be used for the servo amplifier of 200V class with 3.5k to 22kW and that of 400V class with 11k to 22kW. The following shows the restrictions on using the FR-CV-(H).

(a) Up to six servo amplifiers can be connected to one FR-CV-(H).

(b) FR-CV-(H) capacity [W] Total of rated capacities [W] of servo amplifiers connected to FR-CV-(H).

(c) The total of used servo motor rated currents should be equal to or less than the applicable current [A] of the FR-CV-(H).

(d) Among the servo amplifiers connected to the FR-CV-(H), the servo amplifier of the maximum capacity should be equal to or less than the maximum connectable capacity [W].

The following table lists the restrictions.

Item	FR-CV-□						
	7.5K	11K	15K	22K	30K	37K	55K
Maximum number of connected servo amplifiers	6						
Total of connectable servo amplifier capacities [kW]	3.75	5.5	7.5	11	15	18.5	27.5
Total of connectable servo motor rated currents [A]	33	46	61	90	115	145	215
Maximum servo amplifier capacity [kW]	3.5	5	7	11	15	15	22

Item	FR-CV-H□			
	22K	30K	37K	55K
Maximum number of connected servo amplifiers	1			2
Total of connectable servo amplifier capacities [kW]	11	15	18.5	27.5
Total of connectable servo motor rated currents [A]	43	57	71	110
Maximum servo amplifier capacity [kW]	11	15	15	22

When using the FR-CV-(H), always install the dedicated stand-alone reactor (FR-CVL-(H)).

Power regeneration common converter	Dedicated stand-alone reactor
FR-CV-7.5K(-AT)	FR-CVL-7.5K
FR-CV-11 K(-AT)	FR-CVL-11K
FR-CV-15K(-AT)	FR-CVL-15K
FR-CV-22K(-AT)	FR-CVL-22K
FR-CV-30K(-AT)	FR-CVL-30K
FR-CV-37K	FR-CVL-37K
FR-CV-55K	FR-CVL-55K
FR-CV-H22K(-AT)	FR-CVL-H22K
FR-CV-H30K(-AT)	FR-CVL-H30K
FR-CV-H37K	FR-CVL-H37K
FR-CV-H55K	FR-CVL-H55K

(3) Connection diagram

(a) 200V class

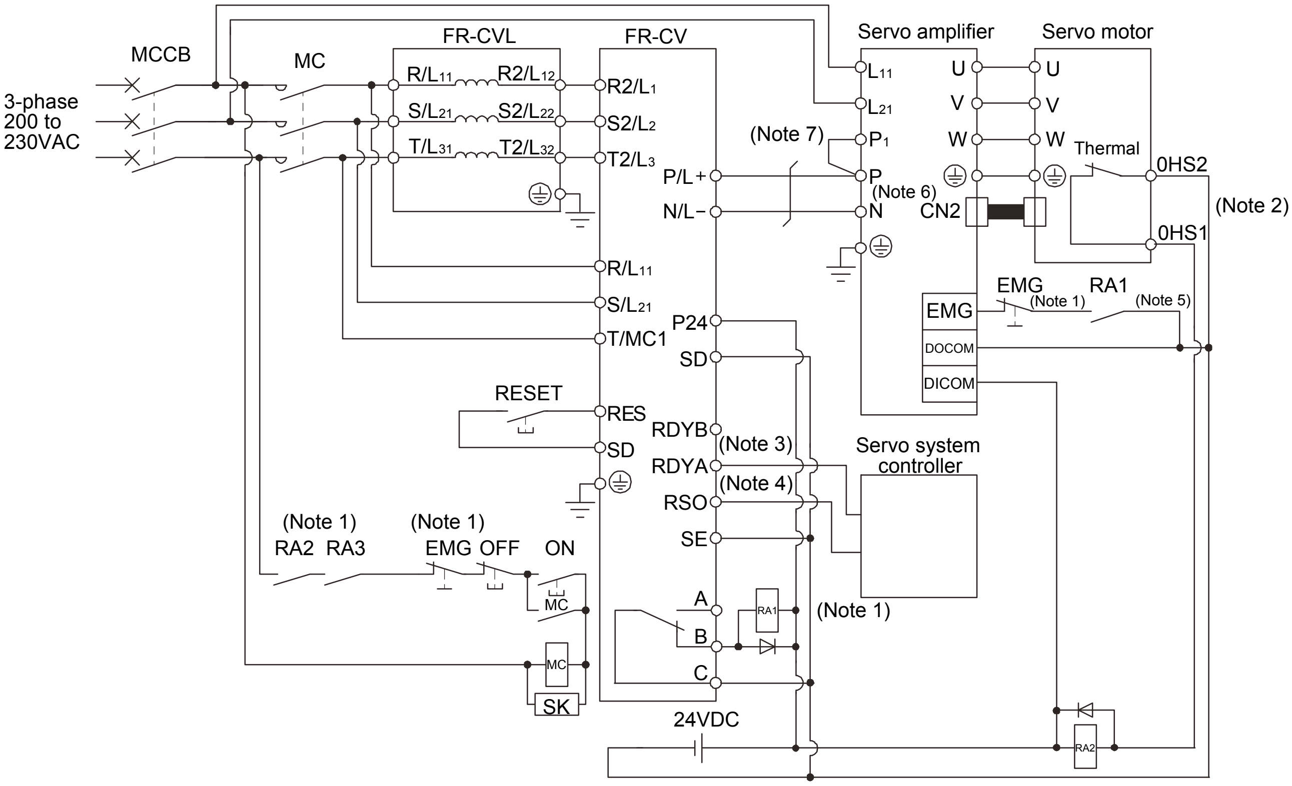

Note 1. Configure a sequence that will shut off main circuit power at an emergency stop or at FR-CV or servo amplifier alarm occurrence.

2. For the servo motor with thermal sensor, configure a sequence that will shut off main circuit power when the thermal sensor operates.

3. For the servo amplifier, configure a sequence that will switch the servo on after the FR-CV is ready.

4. For the FR-CV, the RSO signal turns off when it is put in a ready-to-operate status where the reset signal is input. Configure a sequence that will make the servo inoperative when the RSO signal is on.

5. Configure a sequence that will make a stop with the emergency stop input of the programmable controller if an alarm occurs in the FR-CV. When the programmable controller does not have an emergency stop input, use the forced stop input of the servo amplifier to make a stop as shown in the diagram.

6. When using the servo amplifier of 7kW or less, make sure to disconnect the wiring of built-in regeneration resistor (3.5kW or less: P-D, 5k/7kW: P-C).

7. When using the servo amplifier of 11k to 22kW, make sure to connect P_1 and P. (Factory-wired.)

(b) 400V class

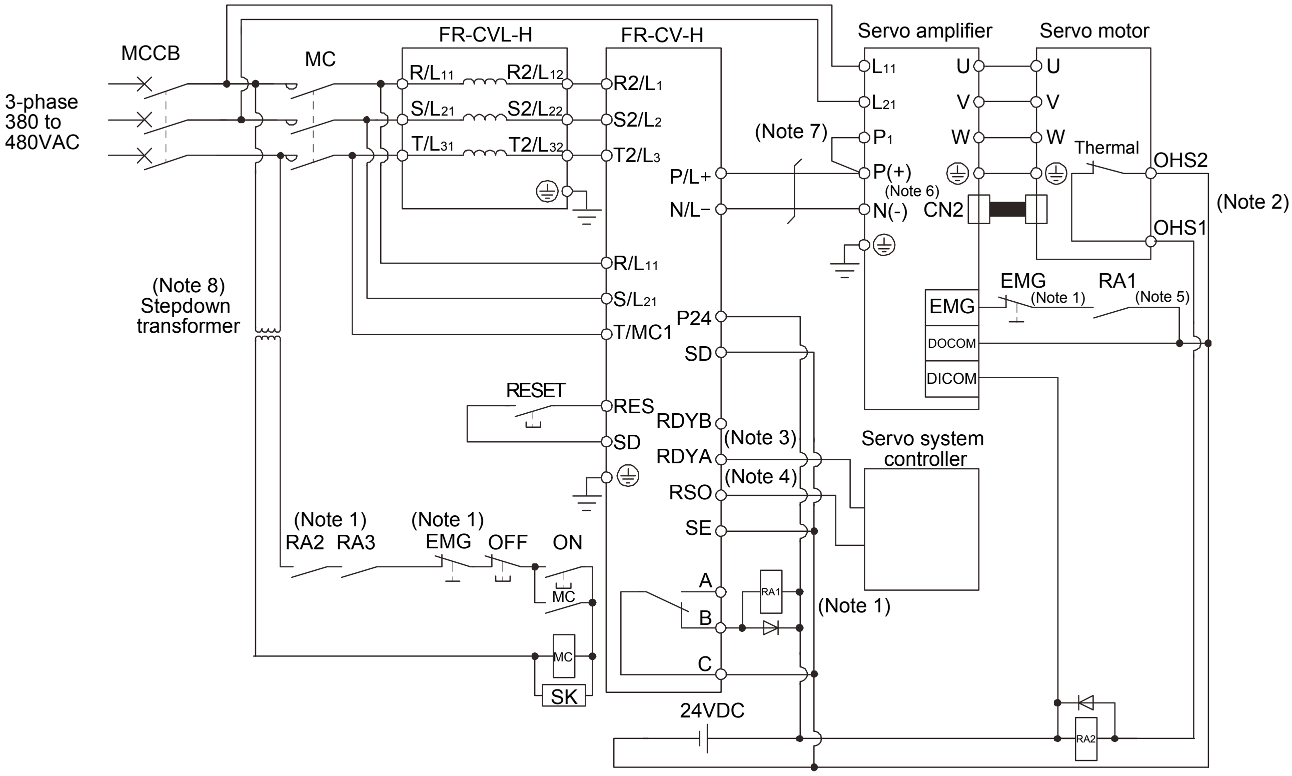

Note 1. Configure a sequence that will shut off main circuit power at an emergency stop or at FR-CV-H or servo amplifier alarm occurrence.

2. For the servo motor with thermal sensor, configure a sequence that will shut off main circuit power when the thermal sensor operates.

3. For the servo amplifier, configure a sequence that will switch the servo on after the FR-CV-H is ready.

4. For the FR-CV-H, the RSO signal turns off when it is put in a ready-to-operate status where the reset signal is input. Configure a sequence that will make the servo inoperative when the RSO signal is on.

5. Configure a sequence that will make a stop with the emergency stop input of the servo system controller if an alarm occurs in the FR-CV-H. When the servo system controller does not have an emergency stop input, use the forced stop input of the servo amplifier to make a stop as shown in the diagram.

6. When using the servo amplifier of 7kW or less, make sure to disconnect the wiring of built-in regenerative resistor (2kW or less: P-D, 3.5k to 7kW: P-C.

7. When using the servo amplifier of 11k to 22kW, make sure to connect P_1 and P. (Factory-wired.)

8. Stepdown transformer is required for coil voltage of magnetic contactor more than 200V class servo amplifiers.

(4) Selection example of wires used for wiring

POINT

- Selection condition of wire size is as follows.
  Wire type: 600V Polyvinyl chloride insulated wire (IV wire)
  Construction condition: One wire is constructed in the air

(a) Wire sizes

1) Across P-P(＋), N-N(－)

The following table indicates the connection wire sizes of the DC power supply (P, N terminals) between the FR-CV and servo amplifier.

Total of servo amplifier capacities [kW]	Wires [mm^2]
1 or less	2
2	3.5
5	5.5
7	8
11	14
15	22
22	50

The following table indicates the connection wire sizes of the DC power supply (P(＋), N(－) terminals) between the FR-CV-H and servo amplifier.

Total of servo amplifier capacities [kW]	Wires [mm^2]
1 or less	2
2	3.5
5	5.5
7	8
11	8
15	22
22	22

2) Grounding

For grounding, use the wire of the size equal to or greater than that indicated in the following table, and make it as short as possible.

Power regeneration common converter	Grounding wire size [mm^2]
FR-CV-7.5K to FR-CV-15K	14
FR-CV-22K ･ FR-CV-30K	22
FR-CV-37K ･ FR-CV-55K	38
FR-CV-H22K ･ FR-CV-H30K	8
FR-CV-H37K ･ FR-CV-H55K	22

(b) Example of selecting the wire sizes

When connecting multiple servo amplifiers, always use junction terminals for wiring the servo amplifier terminals P, N. Also, connect the servo amplifiers in the order of larger to smaller capacities.

1) 200V class

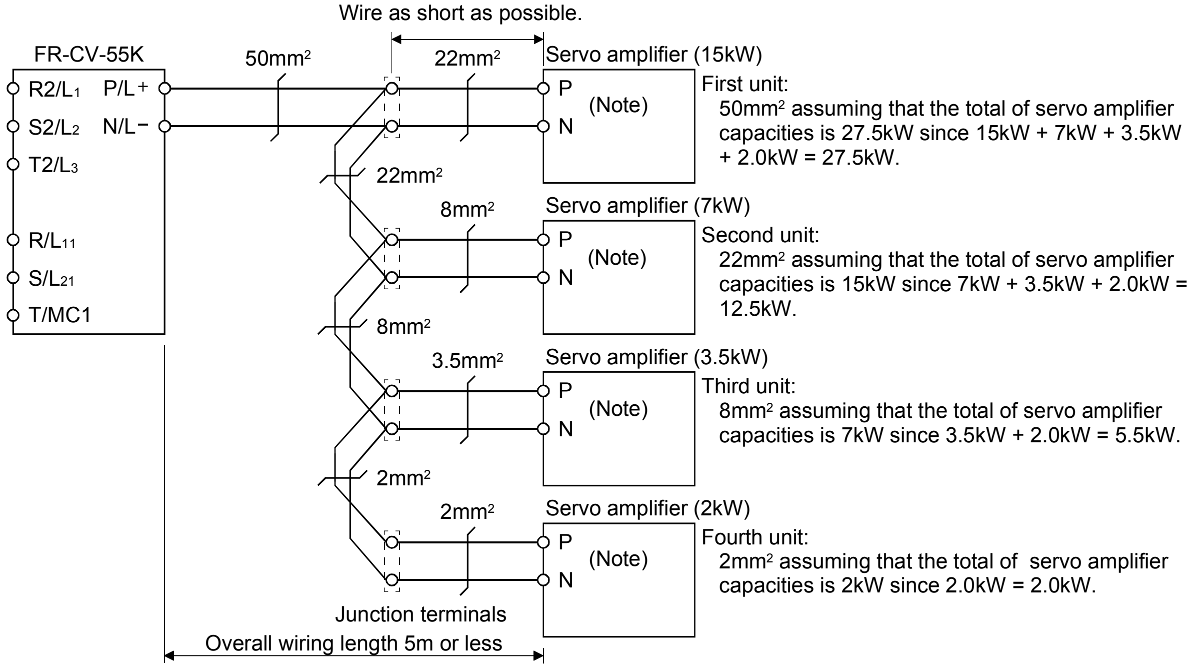

First unit:
50mm² assuming that the total of servo amplifier capacities is 27.5kW since 15kW + 7kW + 3.5kW + 2.0kW = 27.5kW.

Second unit:
22mm² assuming that the total of servo amplifier capacities is 15kW since 7kW + 3.5kW + 2.0kW = 12.5kW.

Third unit:
8mm² assuming that the total of servo amplifier capacities is 7kW since 3.5kW + 2.0kW = 5.5kW.

Fourth unit:
2mm² assuming that the total of servo amplifier capacities is 2kW since 2.0kW = 2.0kW.

Note. When using the servo amplifier of 7kW or less, make sure to disconnect the wiring of built-in regeneration resistor (3.5kW or less: P-D, 5k/7kW: P-C).

2) 400V class

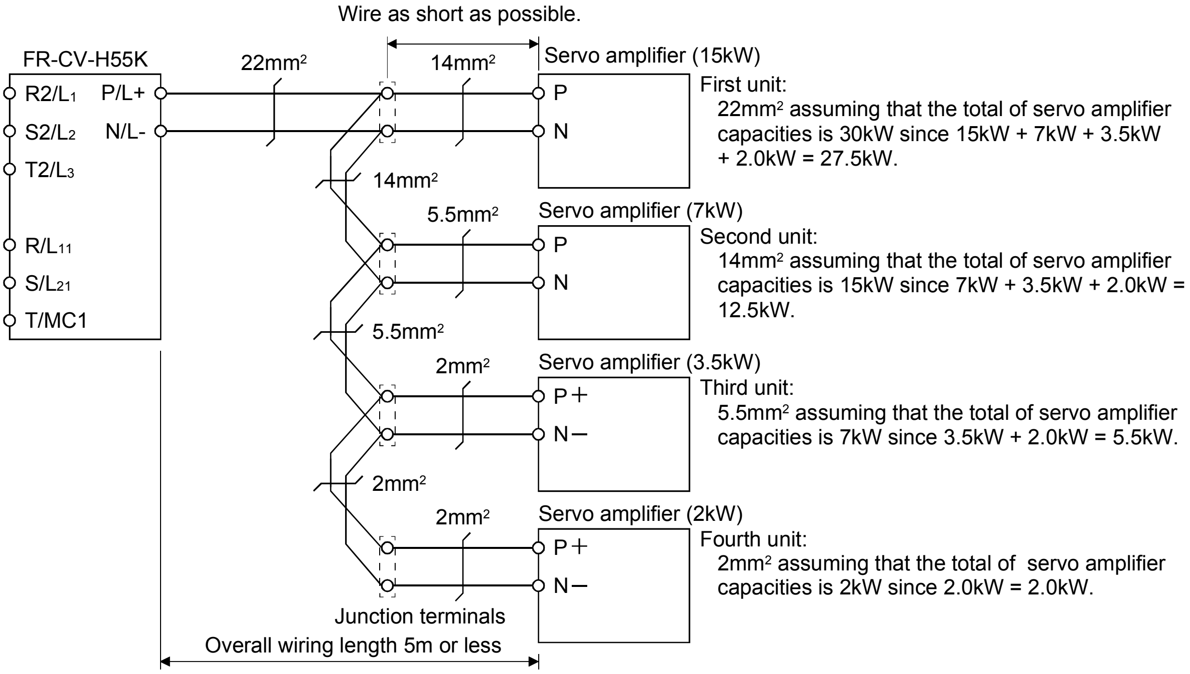

(5) Other precautions

(a) When using the FR-CV-(H), always install the dedicated stand-alone reactor (FR-CVL-(H)). Do not use the power factor improving AC reactor (FR-BAL-(H)) or power factor improving DC reactor (FR-BEL-(H)).

(b) The inputs/outputs (main circuits) of the FR-CV-(H) and servo amplifiers include high-frequency components and may provide electromagnetic wave interference to communication equipment (such as AM radios) used near them. In this case, interference can be reduced by installing the radio noise filter (FR-BIF-(H)) or line noise filter (FR-BSF01, FR-BLF).

(c) The overall wiring length for connection of the DC power supply between the FR-CV-(H) and servo amplifiers should be 5m or less, and the wiring must be twisted.

(6) Specifications

Power regeneration common converter FR-CV-☐ Item			7.5K	11K	15K	22K	30K	37K	55K
Total of connectable servo amplifier capacities [kW]			3.75	5.5	7.5	11	15	18.5	27.5
Maximum servo amplifier capacity [kW]			3.5	5	7	11	15	15	22
Output	Total of connectable servo motor rated currents [A]		33	46	61	90	115	145	215
	Regenerative braking torque	Short-time rating	Total capacity of applicable servo motors, 300% torque, 60s (Note 1)						
		Continuous rating	100% torque						
Power supply	Rated input AC voltage/frequency		Three-phase 200 to 220V 50Hz, 200 to 230V 60Hz						
	Permissible AC voltage fluctuation		Three-phase 170 to 242V 50Hz, 170 to 253V 60Hz						
	Permissible frequency fluctuation		±5%						
	Power supply capacity (Note 2) [kVA]		17	20	28	41	52	66	100
IP rating (JEM 1030), cooling system			Open type (IP rating: IP00), forced cooling						
Environment	Ambient temperature		-10℃ to +50℃ (14 to 122°F) (non-freezing)						
	Ambient humidity		90%RH or less (non-condensing)						
	Ambience		Indoors (without corrosive gas, flammable gas, oil mist, dust and dirt)						
Altitude, vibration			1000m or less above sea level, 5.9m/s^2 or less						
Molded-case circuit breaker or earth-leakage current breaker			30AF 30A	50AF 50A	100AF 75A	100AF 100A	125AF 125A	125AF 125A	225AF 175A
Magnetic contactor			S-N20	S-N35	S-N50	S-N65	S-N80	S-N95	S-N125

Power regeneration common converter FR-CV-H☐ Item			22K	30K	37K	55K
Total of connectable servo amplifier capacities [kW]			11	15	18.5	27.5
Maximum servo amplifier capacity [kW]			11	15	15	22
Output	Total of connectable servo motor rated currents [A]		43	57	71	110
	Regenerative braking torque	Short-time rating	Total capacity of applicable servo motors, 300% torque, 60s (Note1)			
		Continuous rating	100% torque			
Power supply	Rated input AC voltage/frequency		Three-phase 380 to 480V, 50Hz/60Hz			
	Permissible AC voltage fluctuation		Three-phase 323 to 528V, 50Hz/60Hz			
	Permissible frequency fluctuation		±5%			
	Power supply capacity (Note 2) [kVA]		41	52	66	100
IP rating (JEM 1030), cooling system			Open type (IP rating: IP00), forced cooling			
Environment	Ambient temperature		-10℃ to +50℃ (14 to 122°F) (non-freezing)			
	Ambient humidity		90%RH or less (non-condensing)			
	Ambience		Indoors (without corrosive gas, flammable gas, oil mist, dust and dirt)			
Altitude, vibration			1000m or less above sea level, 5.9m/s^2 or less			
Molded-case circuit breaker or earth-leakage current breaker			60AF 60A	100AF 75A	100AF 75A	225AF 125A
Magnetic contactor			S-N25	S-N35	S-N35	S-N65

Note 1. This is the time when the protective function of the FR-CV is activated. The protective function of the servo amplifier is activated in the time indicated in section 13.1.

2. The mentioned values are the power supply capacity of the FR-CV-(H). The actual power supply capacity required is the total power supply capacity of connected servo amplifiers.

14.6 External dynamic brake

⚠CAUTION

- For the MR-J3-11KT(4) to MR-J3-22KT(4) servo amplifiers, use an external dynamic brake. When not using the external dynamic brake, the servo motor will not stop immediately but coasts, and this may cause an accident. Ensure the safety in the entire equipment.

POINT

- Configure a sequence which switches off the magnetic contactor of the external dynamic brake after (or as soon as) the servo-on (RYn0) has been turned off at a power failure or a malfunction.
- For the braking time taken when the external dynamic brake is operated, refer to section 13.3.
- The external dynamic brake is rated for a short duration. Do not use it for high duty.
- When using the 400V class dynamic brake, the power supply voltage is restricted to 1-phase 380VAC to 463VAC (50Hz/60Hz).
- Dynamic brake operates at occurrence of alarm, servo forced stop warning (AE6), and when the power is turned off. The dynamic brake is an emergency stop-use function, so do not use it for normal stop.
- For a machine operating at the recommended load to motor inertia ratio or less, the estimated number of usage times of the dynamic brake is 1000 times while the machine decelerates from the rated speed to a stop once in 10 minutes.
- Be sure to enable Forced stop (EMG) after the servo motor stops when using Forced stop (EMG) frequently in other than emergency.

(1) Selection of external dynamic brake

The dynamic brake is designed to bring the servo motor to a sudden stop when a power failure occurs or the protective circuit is activated, and is built in the 7kW or less servo amplifier. Since it is not built in the 11kW or more servo amplifier, purchase it separately. Assign the dynamic brake interlock (DB) to any of CN6-14, CN6-15, and CN6-16 pins in parameter No.PD09, PD10 or PD11.

Servo amplifier	External dynamic brake
MR-J3-11KT	DBU-11K
MR-J3-15KT	DBU-15K
MR-J3-22KT	DBU-22K
MR-J3-11KT4	DBU-11K-4
MR-J3-15KT4	DBU-22K-4
MR-J3-22KT4	

(2) Connection example

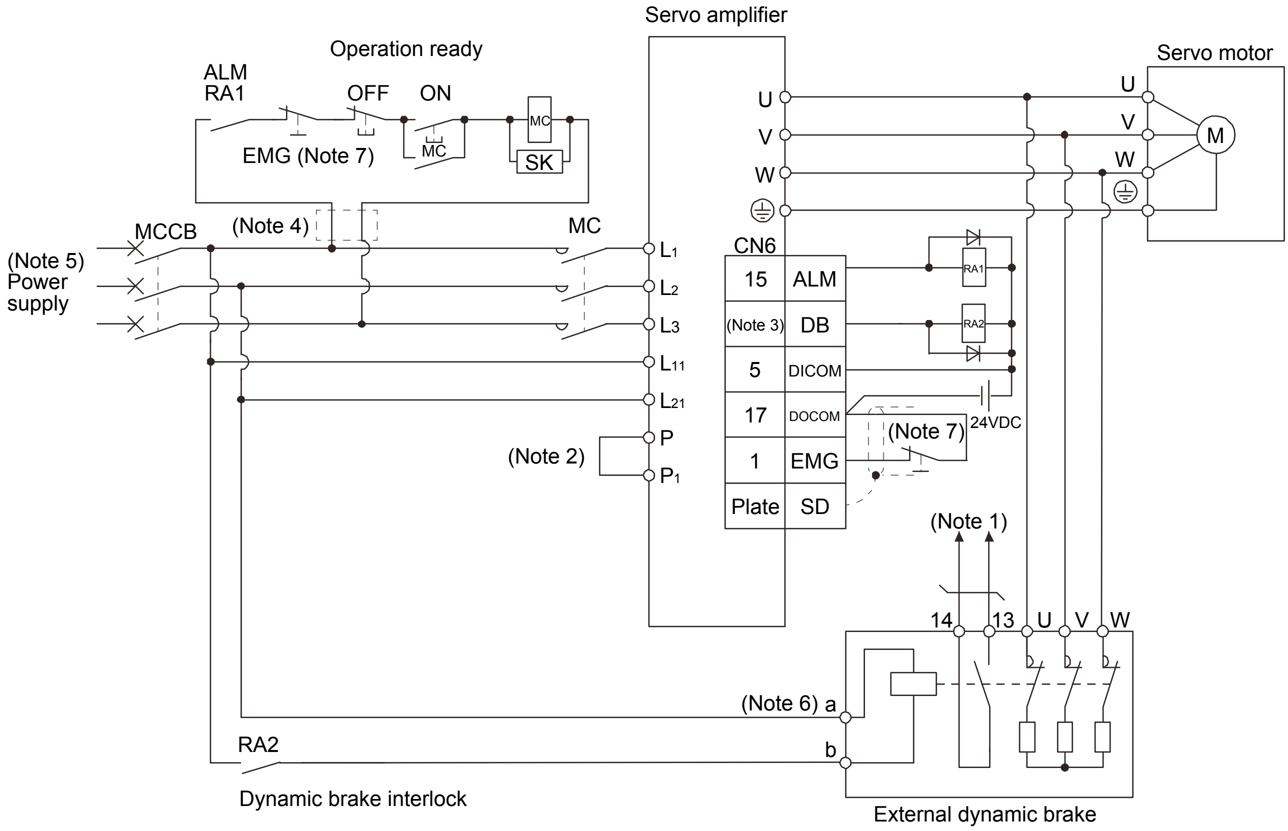

Note 1. Terminals 13, 14 are normally open contact outputs. If the external dynamic brake is seized, terminals 13, 14 will open. Therefore, configure up an external sequence to prevent servo-on.

2. When using the servo amplifier of 11k to 22kW, make sure to connect P_1 and P. (Factory-wired.) When using the power factor DC reactor, refer to section 14.11.
3. Assign the dynamic brake interlock (DB) in the parameters No.PD09・PD10・PD11.
4. Stepdown transformer is required for coil voltage of magnetic contactor more than 200V class in 400V class servo amplifiers.
5. Refer to section 1.2 for the power supply specification.
6. The power supply voltage of the inside magnet contactor for 400V class external dynamic brake DBU-11K-4 and DBU-22K-4 is restricted as follows. When using these external dynamic brakes, use them within the range of the power supply.

External Dynamic brake	Power supply voltage
DBU-11K-4 DBU-22K-4	1-phase 380 to 463VAC 50Hz/60Hz

7. Configure the circuit which shuts off main circuit power with external sequence at forced stop (EMG) off.

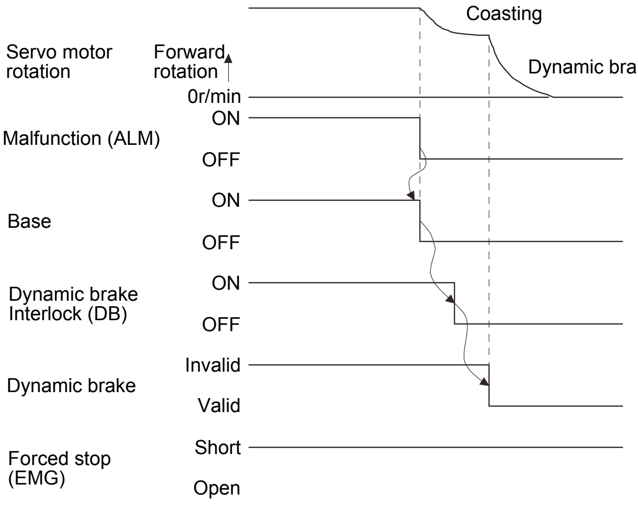

a. Timing chart at alarm occurrence

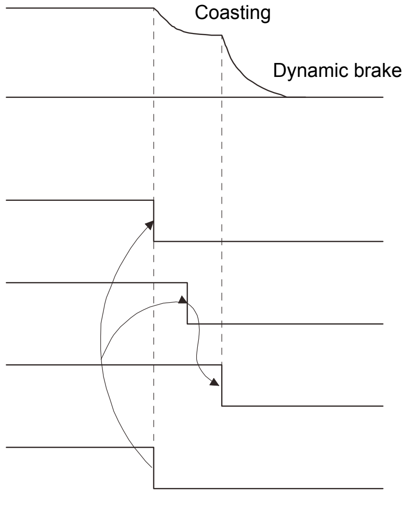

b. Timing chart at Forced stop (EMG) validity

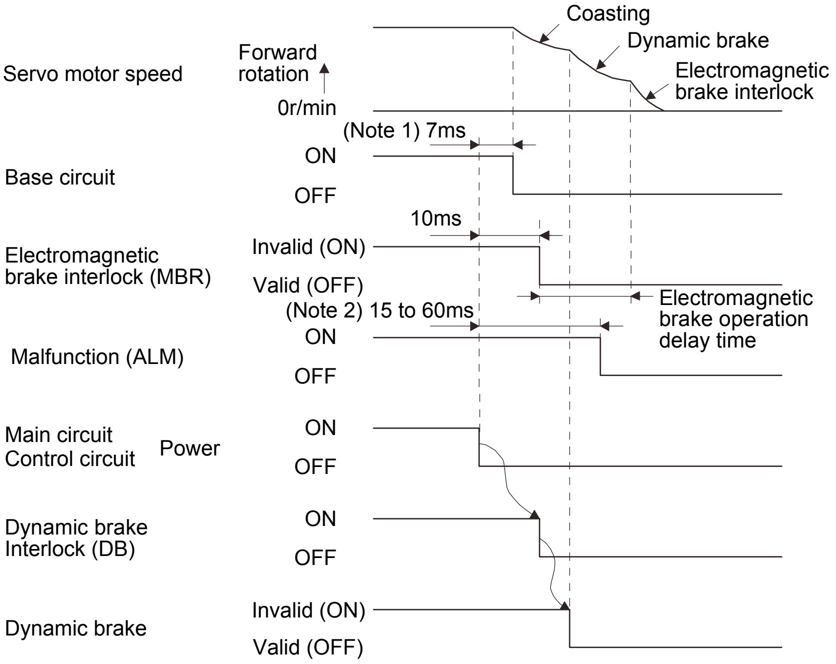

Note 1. When powering off, dynamic brake interlock (DB) will be turned off, and the base circuit will be turned off earlier than usual before an output shortage occurs.
(Only when assigning the DB as the output signal)
2. Variable according to the operation status.

c. Timing chart when both of the main and control circuit power are OFF.

(3) Outline dimension drawing

(a) DBU-11K・DBU-15K・DBU-22K

[Unit: mm]

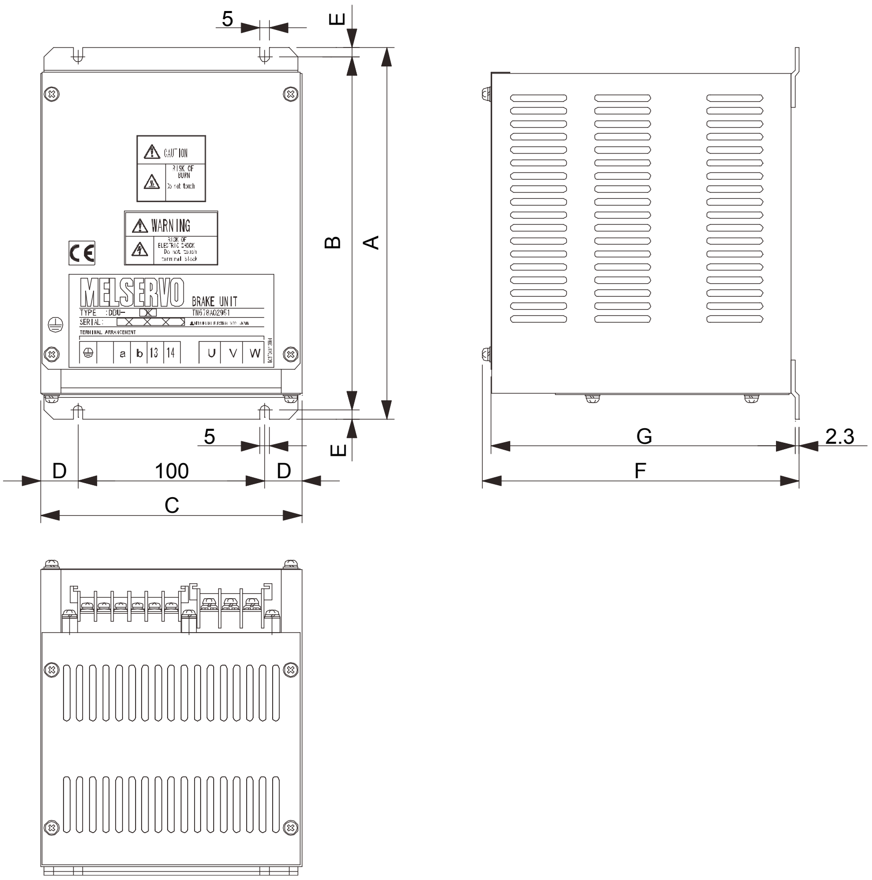

Terminal block

⏚		a	b	13	14

Screw: M3.5
Tightening torque: 0.8[N・m]

U	V	W

Screw: M4
Tightening torque: 1.2[N・m

External dynamic brake	A	B	C	D	E	F	G	Mass [kg]([lb])	(Note) Connection wire [mm^2]	
									U, V, and W	Other than U, V, and W
DBU-11K	200	190	140	20	5	170	163.5	2 (4.41)	5.5 (AWG10)	2 (AWG14)
DBU-15K, 22K	250	238	150	25	6	235	228	6 (13.23)	5.5 (AWG10)	2 (AWG14)

Note. Selection condition of wire size is as follows.

Wire type: 600V Polyvinyl chloride insulated wire (IV wire)

Construction condition: One wire is constructed in the air

(b) DBU-11K-4 · DBU-22K-4

[Unit: mm]

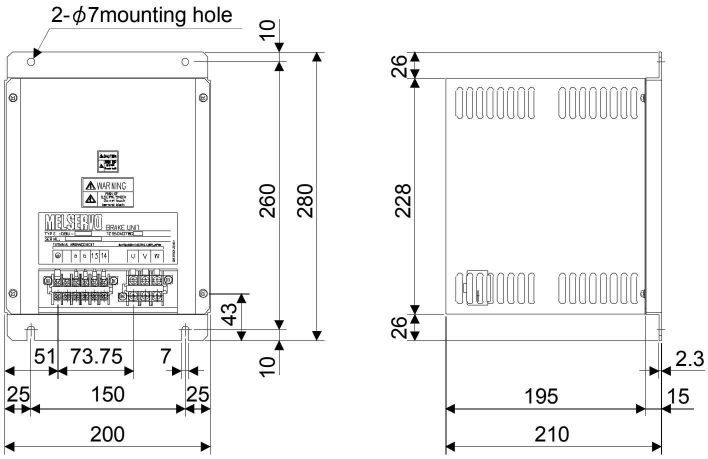

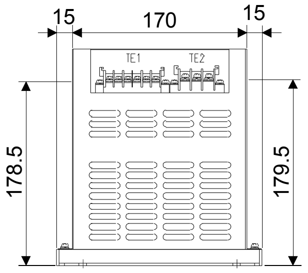

Mass: 6.7[kg] (14.8 [lb])

Terminal block
TE1

⏚		a	b	13	14

Screw: M3.5
Tightening torque: 0.8[N · m]

TE2

U	V	W

Screw: M4
Tightening torque: 1.2[N · m]

External dynamic brake	(Note) Connection wire [mm^2]	
	U, V, and W	Other than U, V, and W
DBU-11K-4	5.5 (AWG10)	2 (AWG14)
DBU-22K-4	5.5 (AWG10)	2 (AWG14)

Note. Selection condition of wire size is as follows.
Wire type: 600V Polyvinyl chloride insulated wire (IV wire)
Construction condition: One wire is constructed in the air

14.7 Battery MR-J3BAT

POINT
･Refer to appendix 9 and 10 for battery transportation and the new EU Battery Directive.

(1) Purpose of use for MR-J3BAT

This battery is used to construct an absolute position detection system. Refer to section 14.3 for the fitting method, etc.

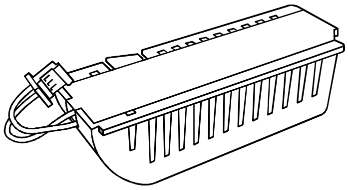

(2) Year and month when MR-J3BAT is manufactured

The year and month when MR-J3BAT is manufactured are written down in Serial No. on the rating plate of the battery back face.

The year and month of manufacture are indicated by the last one digit of the year and 1 to 9, X(10), Y(11), Z(12).

For October 2004, the Serial No. is like, "SERIAL □ 4X □□□□□□".

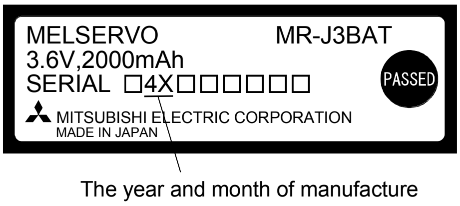

14.8 Heat sink outside mounting attachment (MR-J3ACN)

Use the heat sink outside mounting attachment to mount the heat generation area of the servo amplifier in the outside of the control box to dissipate servo amplifier-generated heat to the outside of the box and reduce the amount of heat generated in the box, thereby allowing a compact control box to be designed.

In the control box, machine a hole having the panel cut dimensions, fit the heat sink outside mounting attachment to the servo amplifier with the fitting screws (4 screws supplied), and install the servo amplifier to the control box.

The environment outside the control box when using the heat sink outside mounting attachment should be within the range of the servo amplifier operating environment conditions.

The heat sink outside mounting attachment of MR-J3ACN can be used for MR-J3-11KT(4) to MR-J3-22KT(4).

(1) Panel cut dimensions

[Unit : mm]

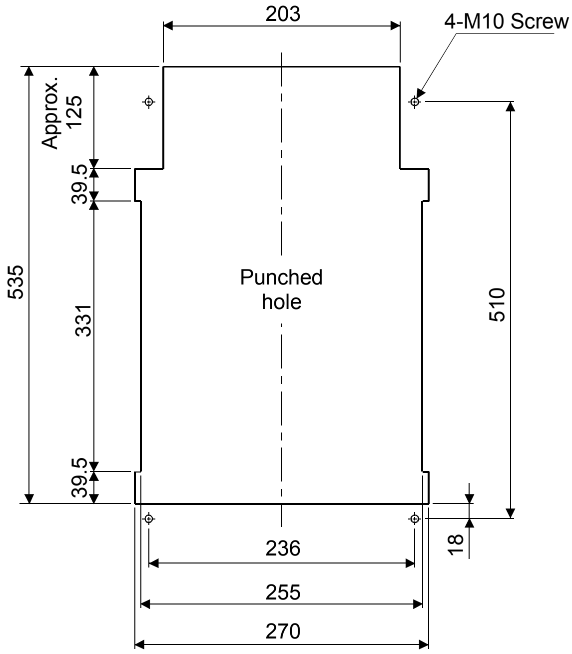

(2) How to assemble the attachment for a heat sink outside mounting attachment

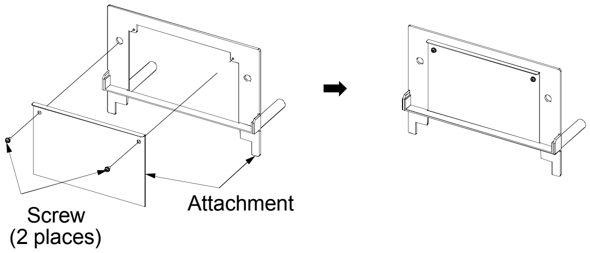

(3) Fitting method

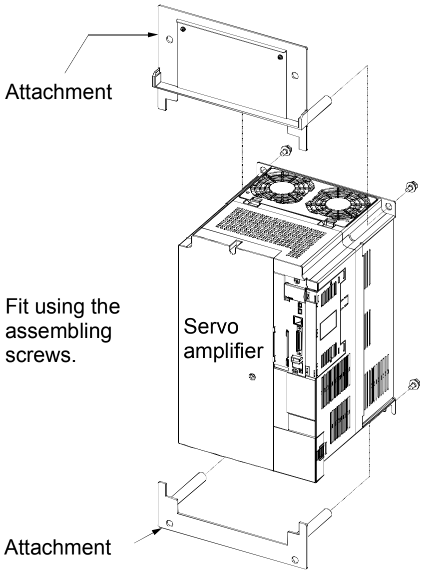

a. Assembling the heat sink outside mounting attachment

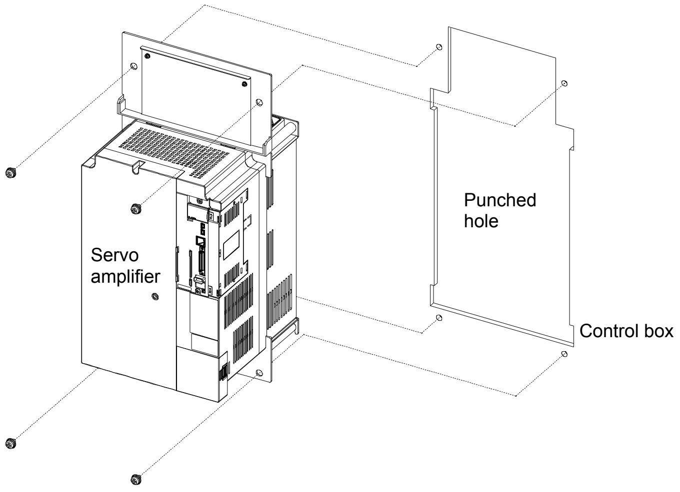

b. Installation to the control box

(4) Outline dimension drawing

[Unit: mm]

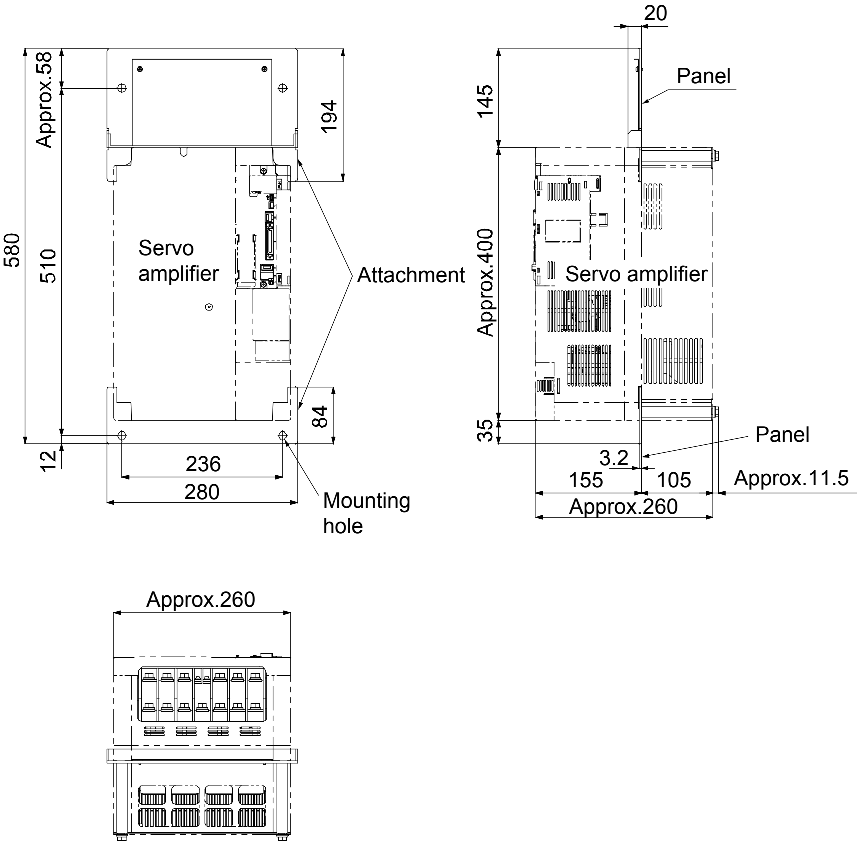

14.9 Selection example of wires

POINT

- Wires indicated in this section are separated wires. When using a cable between the servo amplifier and servo motor, use a 600V grade EP rubber insulated chloroprene sheath cab-tire cable (2PNCT). For selection of cables, refer to appendix 6.
- To comply with the UL/cUL (CSA) standard, use the wires shown in appendix 6 for wiring. To comply with other standards, use a wire that is complied with each standard.
- Selection condition of wire size is as follows.

  Construction condition: One wire is constructed in the air

  Wire length: 30m or less

(1) Wires for power supply wiring

POINT

- Use 600V grade heat-resistant polyvinyl chloride insulated wires (HIV wires) for HF-JP series servo motors.

The following diagram shows the wires used for wiring. Use the wires given in this section or equivalent.

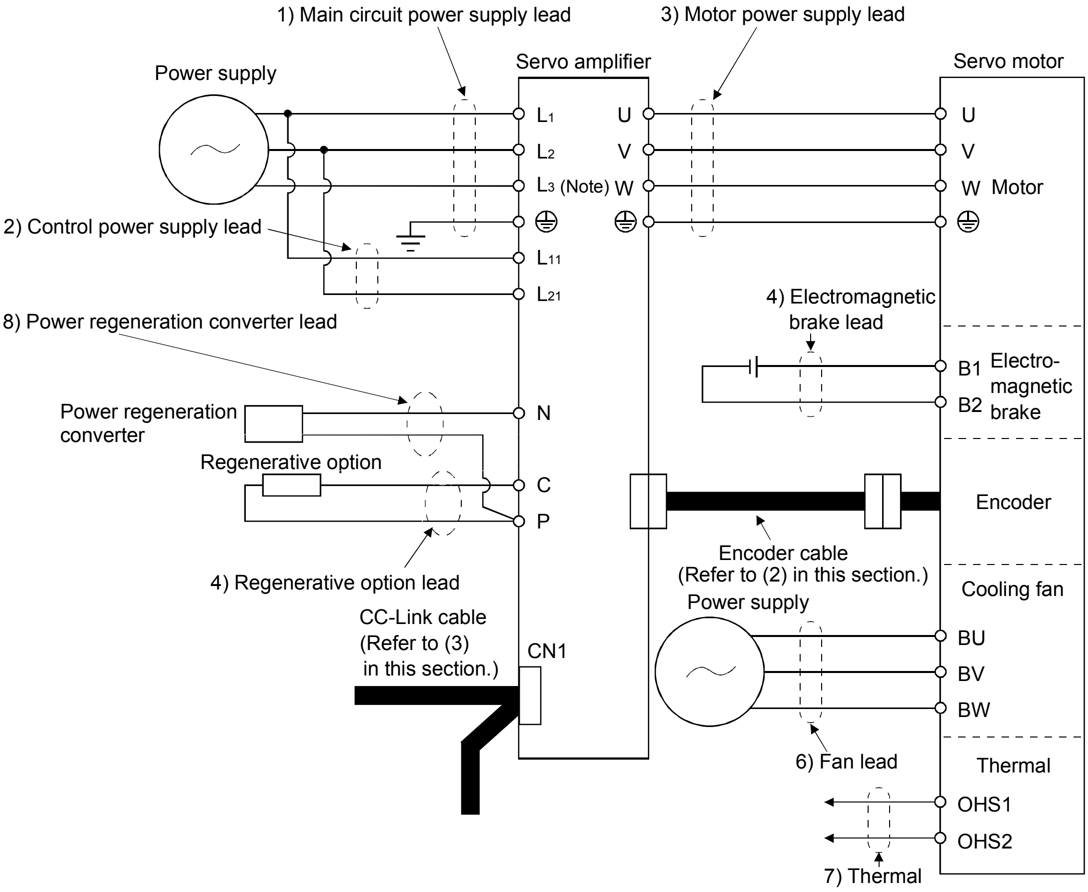

Note. There is no L3 for 1-phase 100 to 120VAC power supply.

(a) When using the 600V Polyvinyl chloride insulated wire (IV wire)
Selection example of wire size when using IV wires is indicated below.

Table 14.1 Wire size selection example 1 (IV wire)

Servo amplifier	Wires [mm^2] (Note 1, 4)						
	1) L_1 · L_2 · L_3 · ⏚	2) L_{11} · L_{21}	3) U · V · W · ⏚	4) P · C	5) B1 · B2	6) BU · BV · BW	7) OHS1 · OHS2
MR-J3-10T(1)	2(AWG14)	1.25(AWG16)	1.25(AWG16)	2(AWG14)	1.25(AWG16)		
MR-J3-20T(1)							
MR-J3-40T(1)							
MR-J3-60T							
MR-J3-70T							
MR-J3-100T			2(AWG14)				
MR-J3-200TN							
MR-J3-350T	3.5(AWG12)		3.5(AWG12)				
MR-J3-500T (Note 2)	5.5(AWG10): a	1.25(AWG16): h	5.5(AWG10): a	2(AWG14): g			
MR-J3-700T (Note 2)	8(AWG8): b		8(AWG8): b	3.5(AWG12): a		2(AWG14) (Note 3)	1.25(AWG16) (Note 3)
MR-J3-11KT (Note 2)	14(AWG6): c	1.25(AWG16): g	22(AWG4): d	5.5(AWG10): j		2(AWG14)	1.25(AWG16)
MR-J3-15KT (Note 2)	22(AWG4): d		30(AWG2): e				
MR-J3-22KT (Note 2)	50(AWG1/0): f		60(AWG2/0): f	5.5(AWG10): k			
MR-J3-60T4	2(AWG14)	1.25(AWG16)	1.25(AWG16)	2(AWG14)			
MR-J3-100T4							
MR-J3-200T4			2(AWG14)				
MR-J3-350T4	2(AWG14): g	1.25(AWG16): h	2(AWG14): g	2(AWG14): g			
MR-J3-500T4 (Note 2)	5.5(AWG10): a		5.5(AWG10): a				
MR-J3-700T4 (Note 2)						2(AWG14) (Note 3)	1.25(AWG16) (Note 3)
MR-J3-11KT4 (Note 2)	8(AWG8): l	1.25(AWG16): g	8(AWG8): l	3.5(AWG12): j		2(AWG14)	1.25(AWG16)
MR-J3-15KT4 (Note 2)	14(AWG6): c		22(AWG4): d	5.5(AWG10): j			
MR-J3-22KT4 (Note 2)	14(AWG6): m		22(AWG4): n	5.5(AWG10): k			

Note 1. Alphabets in the table indicate crimping tools. For crimping terminals and applicable tools, refer to (1) (c) in this section.
2. When connecting to the terminal block, be sure to use the screws which are provided with the terminal block.
3. For the servo motor with a cooling fan.
4. Wires are selected based on the highest rated current among combining servo motors.

Use wires 8) of the following sizes with the power regeneration converter (FR-RC-(H)).

Model	Wires[mm^2]
FR-RC-15K	14(AWG6)
FR-RC-30K	14(AWG6)
FR-RC-55K	22(AWG4)
FR-RC-H15K	14(AWG6)
FR-RC-H30K	14(AWG6)
FR-RC-H55K	14(AWG6)

(b) When using the 600V Grade heat-resistant polyvinyl chloride insulated wire (HIV wire)
Selection example of wire size when using HIV wires is indicated below. For the wire (8)) for power regeneration converter (FR-RC-(H)), use the IV wire indicated in (1) (a) in this section.

Table 14.2 Wire size selection example 2 (HIV wire)

Servo amplifier	Wires [mm^2] (Note 1, 4)						
	1) L_1・L_2・L_3・⏚	2) L_{11}・L_{21}	3) U・V・W・⏚	4) P・C	5) B1・B2	6) BU・BV・BW	7) OHS1・OHS2
MR-J3-10T(1)	2(AWG14)	1.25(AWG16)	1.25(AWG16)	2(AWG14)	1.25(AWG16)		
MR-J3-20T(1)							
MR-J3-40T(1)							
MR-J3-60T							
MR-J3-70T							
MR-J3-100T			1.25(AWG16)				
MR-J3-200TN			2(AWG14)				
MR-J3-350T	3.5(AWG12)		3.5(AWG12)				
MR-J3-500T (Note 2)	5.5(AWG10): a	1.25(AWG16): h	5.5(AWG10): a	2(AWG14): g			
MR-J3-700T (Note 2)	8(AWG8): b		8(AWG8): b	2(AWG14): g		1.25(AWG16) (Note 3)	1.25(AWG16) (Note 3)
MR-J3-11KT (Note 2)	14(AWG6): c	1.25(AWG16): g	14(AWG6): c	3.5(AWG12): j		1.25(AWG16)	1.25(AWG16)
MR-J3-15KT (Note 2)	22(AWG4): d		22(AWG4): d				
MR-J3-22KT (Note 2)	38(AWG1): p		38(AWG1): p	5.5(AWG10): k			
MR-J3-60T4	2(AWG14)	1.25(AWG16)	1.25(AWG16)	2(AWG14)			
MR-J3-100T4							
MR-J3-200T4			2(AWG14)				
MR-J3-350T4	2(AWG14): g	1.25(AWG16): h	2(AWG14): g	2(AWG14): g			
MR-J3-500T4 (Note 2)	3.5(AWG12): a		3.5(AWG12): a				
MR-J3-700T4 (Note 2)			5.5(AWG10): a			1.25(AWG16) (Note 3)	1.25(AWG16) (Note 3)
MR-J3-11KT4 (Note 2)	5.5(AWG10): j	1.25(AWG16): g	8(AWG8): l	2(AWG14): q		1.25(AWG16)	1.25(AWG16)
MR-J3-15KT4 (Note 2)	8(AWG8): l		14(AWG6): c	3.5(AWG12): j			
MR-J3-22KT4 (Note 2)	14(AWG6): m		14(AWG6): m	3.5(AWG12): k			

Note 1. Alphabets in the table indicate crimping tools. For crimping terminals and applicable tools, refer to (1) (c) in this section.
2. When connecting to the terminal block, be sure to use the screws which are provided with the terminal block.
3. For the servo motor with a cooling fan.
4. Wires are selected based on the highest rated current among combining servo motors.

(c) Selection example of crimping terminals

Selection example of crimping terminals for the servo amplifier terminal box when using the wires mentioned in (1) (a) and (b) in this section is indicated below.

Symbol	Servo amplifier side crimping terminals				
	(Note 2) Crimping terminal	Applicable tool			Manufacturer
		Body	Head	Dice	
a	FVD5.5-4	YNT-1210S			Japan Solderless Terminal
(Note 1)b	8-4NS	YHT-8S			
c	FVD14-6	YF-1・E-4	YNE-38	DH-112・DH-122	
d	FVD22-6			DH-113・DH-123	
(Note 1)e	38-6	YPT-60-21		TD-112・TD-124	
		YF-1・E-4	YET-60-1		
(Note 1)f	R60-8	YPT-60-21		TD-113・TD-125	
		YF-1・E-4	YET-60-1		
g	FVD2-4	YNT-1614			
h	FVD2-M3				
j	FVD5.5-6	YNT-1210S			
k	FVD5.5-8				
l	FVD8-6	YF-1・E-4	YNE-38	DH-111・DH-121	
m	FVD14-8			DH-112・DH-122	
n	FVD22-8			DH-113・DH-123	
(Note 1)p	R38-8	YPT-60-21		TD-112・TD-124	
		YF-1・E-4	YET-60-1		
q	FVD2-6	YNT-1614			

Note 1. Coat the part of crimping with the insulation tube.

2. Some crimping terminals may not be mounted depending on the size. Make sure to use the recommended ones or equivalent ones.

(2) Wires for cables

When fabricating a cable, use the wire models given in the following table or equivalent.

Table 14.3 Wires for option cables

Type	Model	Length [m(ft)]	Core size [mm²]	Number of cores	Characteristics of one core			(Note 2) Cable OD [mm]	Wire model (Manufacturer)
					Structure [wires/mm]	Conductor resistance [Ω/mm]	(Note 1) Insulator OD d [mm]		
Encoder cable	MR-J3ENCBL□M-A1-L	2 to 10	AWG22	6 (3 pairs)	7/0.26	53 or less	1.18	7.1	(Note 3) VSVP 7/0.26 (AWG#22 or equivalent)-3P KB-1655-2 (Bando Densen)
	MR-J3ENCBL□M-A2-L								
	MR-J3ENCBL□M-A1-H	2 to 10	AWG22	6 (3 pairs)	70/0.08	56 or less	1.17	7.1	(Note 3) TPE ▪ SVP 70/0.08 (AWG#22 or equivalent)-3P KB-2237-2 (Bando Densen)
	MR-J3ENCBL□M-A2-H								
	MR-J3JCBL03M-A1-L	0.3	AWG26	8 (4 pairs)	30/0.08	233 or less	1.2	7.1±0.3	T/2464-1061/II A-SB 4P × 26AWG (Taiyo Cabletec)
	MR-J3JCBL03M-A2-L								
	MR-EKCBL□M-L	2 to 10	AWG28	4 (2 pairs)	7/0.127	232 or less	1.18	7.0	(Note 3) 20276 composite 6-core shielded cable Ban-gi-shi-16395-1 (Bando Densen)
			AWG22	2	17/0.16	28.7 or less	1.50		
		20 ・ 30	AWG23	12 (6 pairs)	12/0.18	63.6 or less	1.2	8.2±0.3	(Note 3) 20276 VSVPAWG#23 × 6P KB-0492 (Bando Densen)
	MR-EKCBL□M-H	2 to 10	0.2mm²	12 (6 pairs)	40/0.08	105 or less	0.88	7.2	(Note 3) A14B2339 6P (Junkosha)
		20	AWG24	12 (6 pairs)	40/0.08	105 or less	0.88	7.2	(Note 3) TPE ▪ SVP 40/0.08 (AWG#24 or equivalent)-6P KB-1928-2 (Bando Densen)
		30 to 50	AWG24	14 (7 pairs)	40/0.08	105 or less	0.88	8.0	(Note 3) TPE ▪ SVP 40/0.08 (AWG#24 or equivalent)-7P KB-1929-2 (Bando Densen)
	MR-J3JSCBL03M-A1-L	0.3	AWG26	8 (4 pairs)	7/0.16	146 or less	1.0	7.1±0.3	(Note 3) VSVP 7/0.16 (AWG#26 or equivalent)-4P Ban-gi-shi-16822 (Bando Densen)
	MR-J3JSCBL03M-A2-L								
	MR-J3ENSCBL□M-L (-S06)	2 to 10	AWG22	6 (3 pairs)	7/0.26	53 or less	1.18	7.1	(Note 3) VSVP 7/0.26 (AWG#22 or equivalent)-3P KB-1655-2 (Bando Densen)
		20 ・ 30	AWG23	12 (6 pairs)	12/0.18	63.3 or less	1.2	8.2±0.3	(Note 3) 20276 VSVPAWG#23 × 6P KB-0492 (Bando Densen)
	MR-J3ENSCBL□M-H (-S06)	2 to 10	AWG22	6 (3 pairs)	70/0.08	56 or less	1.17	7.1	(Note 3) TPE ▪ SVP 70/0.08 (AWG#22 or equivalent)-3P KB-2237-2 (Bando Densen)
		20 to 50	AWG24	12 (6 pairs)	40/0.08	105 or less	0.88	7.2	(Note 3) TPE ▪ SVP 40/0.08 (AWG#24 or equivalent)-6P KB-1928-2 (Bando Densen)

Type	Model	Length [m(ft)]	Core size [mm^2]	Number of cores	Characteristics of one core			(Note 2) Cable OD [mm]	Wire model (Manufacturer)
					Structure [wires/mm]	Conductor resistance [Ω/mm]	(Note 1) Insulation coating OD d [mm]		
Encoder cable	MR-ENECBL □ M-H	2 to 10	0.2	8 (4 pairs)	40/0.08	105 or less	0.88	7.2	(Note 3) A14B2339 4P
		20	0.2	12 (6 pairs)	40/0.08	105 or less	0.88	7.2	(Note 3) A14B2343 6P
		30 to 50	0.2	14 (7 pairs)	40/0.08	105 or less	0.88	8.0	(Note 3) J14B0238 (0.2*7P)
Motor power supply cable	MR-PWS1CBL □ M-A1-L	2 to 10	AWG18	4	34/0.18	21.8 or less	1.71	6.2±0.3	(Note 4) HRZFEV-A(CL3) AWG18 4 cores (Dyden)
	MR-PWS1CBL □ M-A2-L	2 to 10							
	MR-PWS1CBL □ M-A1-H	2 to 10	AWG19 (0.75 mm^2)	4	150/0.08	29.1 or less	1.63	5.7±0.5	(Note 4) RMFES-A(CL3X) AWG19 4 cores (Dyden)
	MR-PWS1CBL □ M-A2-H	2 to 10							
	MR-PWS2CBL03M-A1-L	0.3	AWG19	4	30/0.18	25.8 or less	1.64	-	(Note 3, 5) J11B2330 UL10125 (Junkosha)
	MR-PWS2CBL03M-A2-L	0.3							
Motor brake cable	MR-BKS1CBL □ M-A1-L	2 to 10	AWG20	2	21/0.18	34.6 or less	1.35	4.7±0.1	(Note 4) HRZFEV-A(CL3) AWG20 2 cores (Dyden)
	MR-BKS1CBL □ M-A2-L	2 to 10							
	MR-BKS1CBL □ M-A1-H	2 to 10	AWG20	2	110/0.08	39.0 or less	1.37	4.5±0.3	(Note 4) RMFES-A(CL3X) AWG20 2 cores (Dyden)
	MR-BKS1CBL □ M-A2-H	2 to 10							
	MR-BKS2CBL03M-A1-L	0.3	AWG20	2	19/0.203	32.0 or less	1.42	-	(Note 3, 5) J11B2331 UL10125 (Junkosha)
	MR-BKS2CBL03M-A2-L	0.3							

Note 1. d is as shown below.

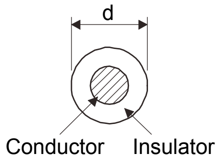

2. Standard OD. Max. OD is about 10% greater.
3. Purchase from Toa Electric Industrial Co. Ltd., Nagoya Branch
4. Purchase from Taisei Co., Ltd.
5. These models consist with solid wires. Specify the color, separately.

(3) CC-Link twisted cable

POINT

- For the cables other than the one indicated here, refer to the open field network CC-Link catalog (L(NA)74108143).

The specifications of the twisted cable usable in CC-Link and the recommended cable are indicated below. If the cable used is other than the recommended cable indicated in the following table, we cannot guarantee the performance of CC-Link. For inquiries on CC-Link compatible cables, contact the nearest Mitsubishi Electric System Service.

Item	Specifications
Model	FANC-110SBH
Manufacturer	Kuramo Electric
Application	For fixed parts
Size	20AWG×3
Insulator material	Polyethylene foam
Insulator color	Blue, white, and yellow
Sheath material	Oil resistant vinyl
Sheath color	Brown
Operating temperature range (Note)	0 to 75 ℃ (32 to 167°F)
Tensile strength	49N
Minimum bend radius	35mm
Overall diameter	Approx. 7.6mm
Approximate mass	70kg/km
Conductor resistance (20℃)	34.5Ω/km or lower
Characteristic impedance	110±15Ω
Applicable specification	UL AWM Style 2464
	CAN/CSA-C22.2
	No.210.2-M90(cUL)

Note. An upper limit of the operating temperature range shows a heat-resistant temperature of the cable material.
In high-temperature environment, the transmittable distance may be reduced.

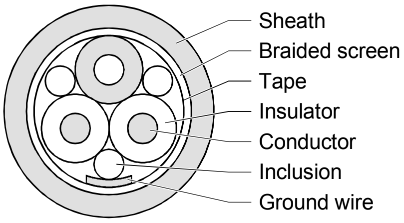

Fig. 14.1 Structure

14.10 Molded-case circuit breakers, fuses, magnetic contactors

⚠CAUTION

- To prevent the servo amplifier from smoke and a fire, select a molded-case circuit breaker which shuts off with high speed.
- Always use one molded-case circuit breaker and one magnetic contactor with one servo amplifier.

When using a fuse instead of the molded-case circuit breaker, use the one having the specifications given in this section.

Servo amplifier	Molded-case circuit breaker (Note 4)			Fuse			Magnetic contactor (Note 2)
	Not using power factor improving reactor	Using power factor improving reactor	Voltage AC	Class (Note 1)	Current [A]	Voltage AC [V]	
MR-J3-10T (1)	30A frame 5A	30A frame 5A	240V	T	10	250	S-N10 S-T10
MR-J3-20T	30A frame 5A	30A frame 5A			10		
MR-J3-20T1	30A frame 10A	30A frame 10A			15		
MR-J3-40T	30A frame 10A	30A frame 5A			15		
MR-J3-60T・70T・100T・40T1	30A frame 15A	30A frame 10A			20		
MR-J3-200TN	30A frame 20A	30A frame 15A			40		S-N20 (Note 3) S-T21
MR-J3-350T	30A frame 30A	30A frame 30A			70		S-N20 S-T21
MR-J3-500T	50A frame 50A	50A frame 40A			125		S-N35
MR-J3-700T	100A frame 75A	50A frame 50A			150		S-N50
MR-J3-11KT	100A frame 100A	100A frame 75A			200		S-N65
MR-J3-15KT	125A frame 125A	100A frame 100A			250		S-N95
MR-J3-22KT	225A frame 175A	225A frame 150A			350		S-N125
MR-J3-60T4	30A frame 5A	30A frame 5A	600Y/347V		10	600	S-N10 S-T10
MR-J3-100T4	30A frame 10A	30A frame 10A			15		
MR-J3-200T4	30A frame 15A	30A frame 15A			25		
MR-J3-350T4	30A frame 20A	30A frame 20A			35		S-N20 (Note 3) S-T21
MR-J3-500T4	30A frame 30A	30A frame 30A			50		
MR-J3-700T4	50A frame 40A	50A frame 30A			65		S-N20 S-T21
MR-J3-11KT4	60A frame 60A	50A frame 50A			100		S-N25
MR-J3-15KT4	100A frame 75A	60A frame 60A			150		S-N35
MR-J3-22KT4	225A frame 125A	100A frame 100A			175		S-N65

Note 1. When not using the servo amplifier as a UL/cUL Standard compliant product, K5 class fuse can be used.
2. Use a magnetic contactor with an operation delay time (interval between current being applied to the coil until closure of contacts) of 80ms or less.
3. S-N18 can be used when auxiliary contact is not required.
4. Use a molded-case circuit breaker which has the same or more operation characteristics than our lineup.

14.11 Power factor improving DC reactor

POINT
・For the 100V power supply type (MR-J3-☐T1), the power factor improving DC reactor cannot be used.

The power factor improving DC reactor increases the form factor of the servo amplifier's input current to improve the power factor. It can decrease the power supply capacity. As compared to the power factor improving AC reactor (FR-BAL), it can decrease the loss. The input power factor is improved to about 95%. It is also effective to reduce the input side harmonics.

When connecting the power factor improving DC reactor to the servo amplifier, always disconnect between P_1 and P_2 (For 11kW or more, disconnect between P_1 and P). If it remains connected, the effect of the power factor improving DC reactor is not produced.

When used, the power factor improving DC reactor generates heat. To release heat, therefore, leave a 10cm or more clearance at each of the top and bottom, and a 5cm or more clearance on each side.

[Unit: mm]

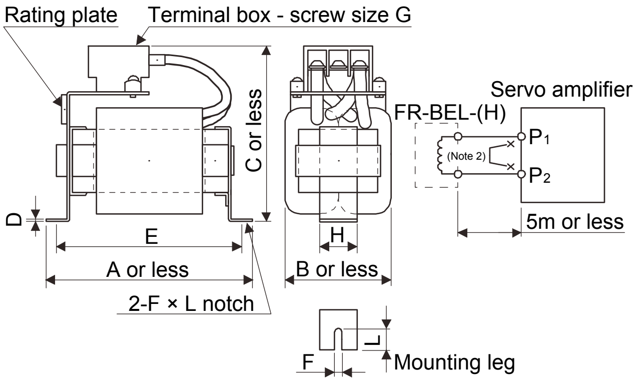

Fig. 14.2

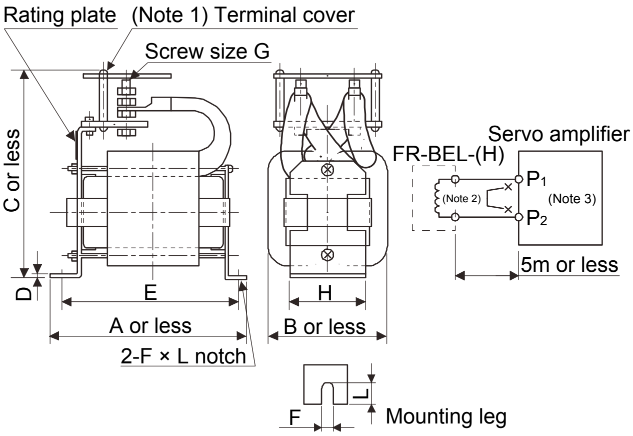

Fig. 14.3

Note 1. Since the terminal cover is supplied, attach it after connecting a wire.
2. When using power factor improving DC reactor, disconnect P_1 and P_2.
3. When over 11kW, "P_2" becomes "P" respectively.

Servo amplifier	Power factor improving DC reactor	Outline drawing	Dimensions [mm]									Mounting screw size	Mass [kg(lb)]	Wire [mm^2] (Note)
			A	B	C	D	E	F	L	G	H			
MR-J3-10T・20T	FR-BEL-0.4K	Fug. 14.2	110	50	94	1.6	95	6	12	M3.5	25	M5	0.5(1.10)	2(AWG14)
MR-J3-40T	FR-BEL-0.75K		120	53	102	1.6	105	6	12	M4	25	M5	0.7(1.54)	
MR-J3-60T・70T	FR-BEL-1.5K		130	65	110	1.6	115	6	12	M4	30	M5	1.1(2.43)	
MR-J3-100T	FR-BEL-2.2K		130	65	110	1.6	115	6	12	M4	30	M5	1.2(2.65)	
MR-J3-200TN	FR-BEL-3.7K		150	75	102	2.0	135	6	12	M4	40	M5	1.7(3.75)	
MR-J3-350T	FR-BEL-7.5K		150	75	126	2.0	135	6	12	M5	40	M5	2.3(5.07)	3.5(AWG12)
MR-J3-500T	FR-BEL-11K		170	93	132	2.3	155	6	14	M5	50	M5	3.1(6.83)	5.5(AWG10)
MR-J3-700T	FR-BEL-15K	Fig. 14.3	170	93	170	2.3	155	6	14	M8	56	M5	3.8(8.38)	8(AWG8)
MR-J3-11KT														22(AWG4)
MR-J3-15KT	FR-BEL-22K		185	119	182	2.6	165	7	15	M8	70	M6	5.4(11.91)	30(AWG2)
MR-J3-22KT	FR-BEL-30K		185	119	201	2.6	165	7	15	M8	70	M6	6.7(14.77)	60(AWG2/0)
MR-J3-60T4	FR-BEL-H1.5K	Fig. 14.2	130	63	89	1.6	115	6	12	M3.5	32	M5	0.9(1.98)	2(AWG14)
MR-J3-100T4	FR-BEL-H2.2K		130	63	101	1.6	115	6	12	M3.5	32	M5	1.1(2.43)	
MR-J3-200T4	FR-BEL-H3.7K		150	75	102	2	135	6	12	M4	40	M5	1.7(3.75)	
MR-J3-350T4	FR-BEL-H7.5K		150	75	124	2	135	6	12	M4	40	M5	2.3(5.07)	
MR-J3-500T4	FR-BEL-H11K		170	93	132	2.3	155	6	14	M5	50	M5	3.1(6.83)	5.5(AWG10)
MR-J3-700T4	FR-BEL-H15K	Fig. 14.3	170	93	160	2.3	155	6	14	M6	56	M5	3.7(8.16)	8(AWG8)
MR-J3-11KT4														
MR-J3-15KT4	FR-BEL-H22K		185	119	171	2.6	165	7	15	M6	70	M6	5.0(11.02)	22(AWG4)
MR-J3-22KT4	FR-BEL-H30K		185	119	189	2.6	165	7	15	M6	70	M6	6.7(14.77)	

Note. Selection condition of wire size is as follows.

Wire type: 600V Polyvinyl chloride insulated wire (IV wire)

Construction condition: One wire is constructed in the air

14.12 Power factor improving reactors

The power factor improving reactors improve the phase factor by increasing the form factor of servo amplifier's input current. It can reduce the power capacity. The input power factor is improved to be about 90%. For use with a 1-phase power supply, it may be slightly lower than 90%.
When using power factor improving reactors for two servo amplifiers or more, be sure to connect a power factor improving reactor to each servo amplifier. If using only one power factor improving reactor, enough improvement effect of phase factor cannot be obtained unless all servo amplifiers are operated.

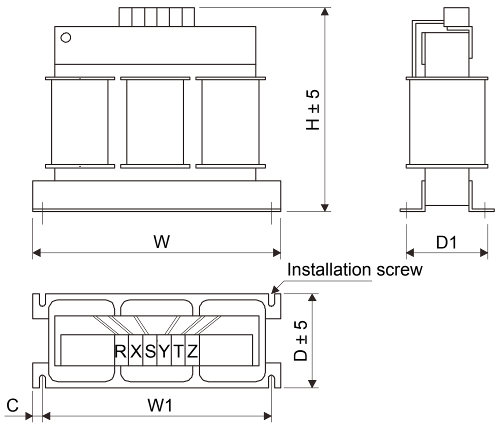

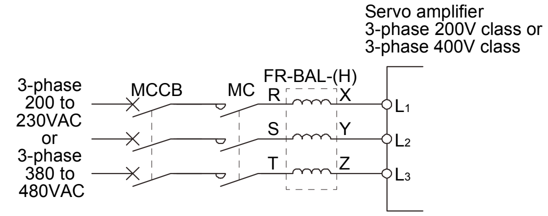

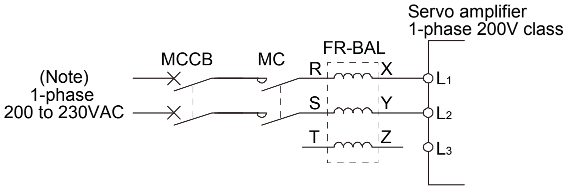

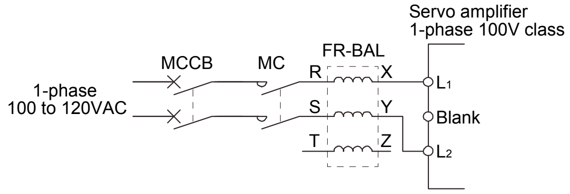

Note. For the 1-phase 200V to 230V power supply, Connect the power supply to L_1, L_2 and leave L_3 open.

Servo amplifier	Model	Dimensions [mm]						Mounting screw size	Terminal screw size	Mass [kg (lb)]
		W	W1	H	D	D1	C			
MR-J3-10T・20T・10T1	FR-BAL-0.4K	135	120	115	59	$45^{0}_{-2.5}$	7.5	M4	M3.5	2.0 (4.41)
MR-J3-40T・20T1	FR-BAL-0.75K	135	120	115	69	$57^{0}_{-2.5}$	7.5	M4	M3.5	2.8 (6.17)
MR-J3-60T・70T・40T1	FR-BAL-1.5K	160	145	140	71	$55^{0}_{-2.5}$	7.5	M4	M3.5	3.7 (8.16)
MR-J3-100T	FR-BAL-2.2K	160	145	140	91	$75^{0}_{-2.5}$	7.5	M4	M3.5	5.6 (12.35)
MR-J3-200TN	FR-BAL-3.7K	220	200	192	90	$70^{0}_{-2.5}$	10	M5	M4	8.5 (18.74)
MR-J3-350T	FR-BAL-7.5K	220	200	194	120	$100^{0}_{-2.5}$	10	M5	M5	14.5 (31.97)
MR-J3-500T	FR-BAL-11K	280	255	220	135	$100^{0}_{-2.5}$	12.5	M6	M6	19 (41.89)
MR-J3-700T	FR-BAL-15K	295	270	275	133	$110^{0}_{-2.5}$	12.5	M6	M6	27 (59.53)
MR-J3-11KT										
MR-J3-15KT	FR-BAL-22K	290	240	301	199	170±5	25	M8	M8	35 (77.16)
MR-J3-22KT	FR-BAL-30K	290	240	301	219	190±5	25	M8	M8	43 (94.80)
MR-J3-60T4	FR-BAL-H1.5K	160	145	140	87	$70^{0}_{-2.5}$	7.5	M4	M3.5	5.3 (11.68)
MR-J3-100T4	FR-BAL-H2.2K	160	145	140	91	$75^{0}_{-2.5}$	7.5	M4	M3.5	5.9 (13.01)
MR-J3-200T4	FR-BAL-H3.7K	220	200	190	90	$70^{0}_{-2.5}$	10	M5	M3.5	8.5 (18.74)
MR-J3-350T4	FR-BAL-H7.5K	220	200	192	120	100±5	10	M5	M4	14 (30.87)
MR-J3-500T4	FR-BAL-H11K	280	255	226	130	100±5	12.5	M6	M5	18.5 (40.79)
MR-J3-700T4	FR-BAL-H15K	295	270	244	130	110±5	12.5	M6	M5	27 (59.53)
MR-J3-11KT4										
MR-J3-15KT4	FR-BAL-H22K	290	240	269	199	170±5	25	M8	M8	Approx.35 (Approx.77.16)
MR-J3-22KT4	FR-BAL-H30K	290	240	290	219	190±5	25	M8	M8	Approx.43 (Approx.94.80)

14.13 Relays (recommended)

The following relays should be used with the interfaces.

Interface	Selection example
Relay used for digital input command signals (interface DI-1)	To prevent defective contacts , use a relay for small signal (twin contacts). (Ex.) Omron : type G2A , MY
Relay used for digital output signals (interface DO-1)	Small relay with 12VDC or 24VDC of rated current 40mA or less (Ex.) Omron : type MY

14.14 Noise reduction techniques

Noises are classified into external noises which enter the servo amplifier to cause it to malfunction and those radiated by the servo amplifier to cause peripheral devices to malfunction. Since the servo amplifier is an electronic device which handles small signals, the following general noise reduction techniques are required. Also, the servo amplifier can be a source of noise as its outputs are chopped by high carrier frequencies. If peripheral devices malfunction due to noises produced by the servo amplifier, noise suppression measures must be taken. The measures will vary slightly with the routes of noise transmission.

(1) Noise reduction techniques

(a) General reduction techniques

- Avoid laying the power lines of servo amplifier (input and output cables) and signal cables side by side or do not bundle them together. Separate power lines from signal cables.
- Use shielded, twisted pair cables for connection with the encoder and for control signal transmission, and connect the shield to the SD terminal.
- Ground the servo amplifier, servo motor, etc. together at one point (refer to section 4.12).

(b) Reduction techniques for external noises that cause the servo amplifier to malfunction

If there are noise sources (such as a magnetic contactor, an electromagnetic brake, and many relays which make a large amount of noise) near the servo amplifier and the servo amplifier may malfunction, the following countermeasures are required.

- Provide surge absorbers on the noise sources to suppress noises.
- Attach data line filters to the signal cables.
- Ground the shields of the encoder connecting cable and the control signal cables with cable clamp fittings.
- Although a surge absorber is built into the servo amplifier, to protect the servo amplifier and other equipment against large exogenous noise and lightning surge, attaching a varistor to the power input section of the equipment is recommended.

(c) Techniques for noises radiated by the servo amplifier that cause peripheral devices to malfunction
Noises produced by the servo amplifier are classified into those radiated from the cables connected to the servo amplifier and its main circuits (input and output circuits), those induced electromagnetically or statically by the signal cables of the peripheral devices located near the main circuit cables, and those transmitted through the power supply cables.

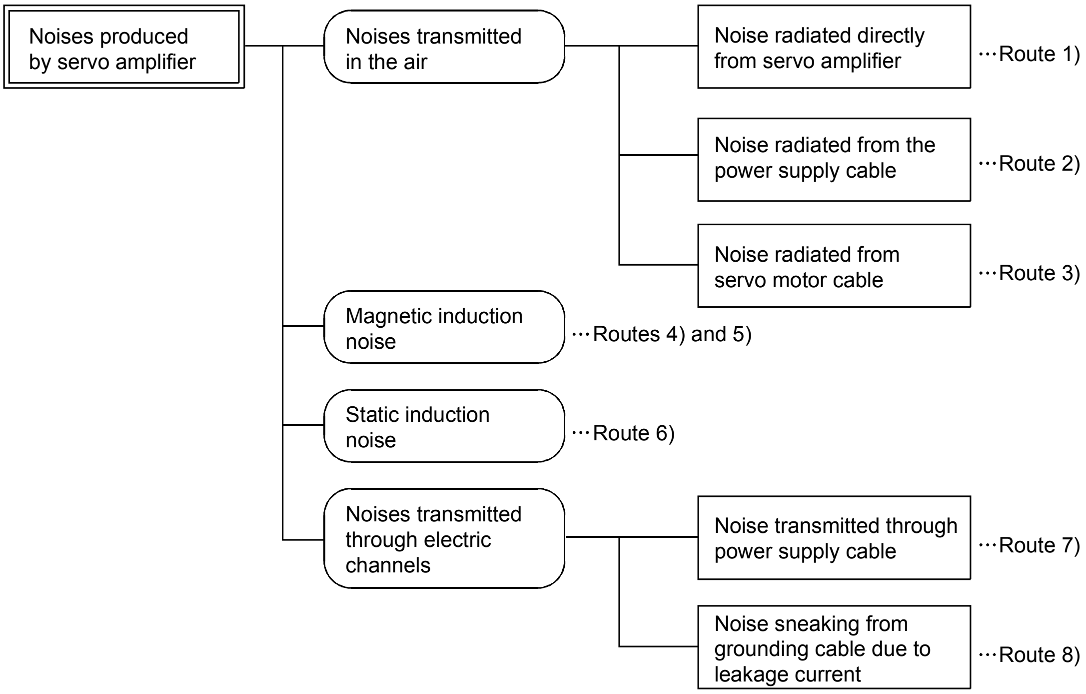

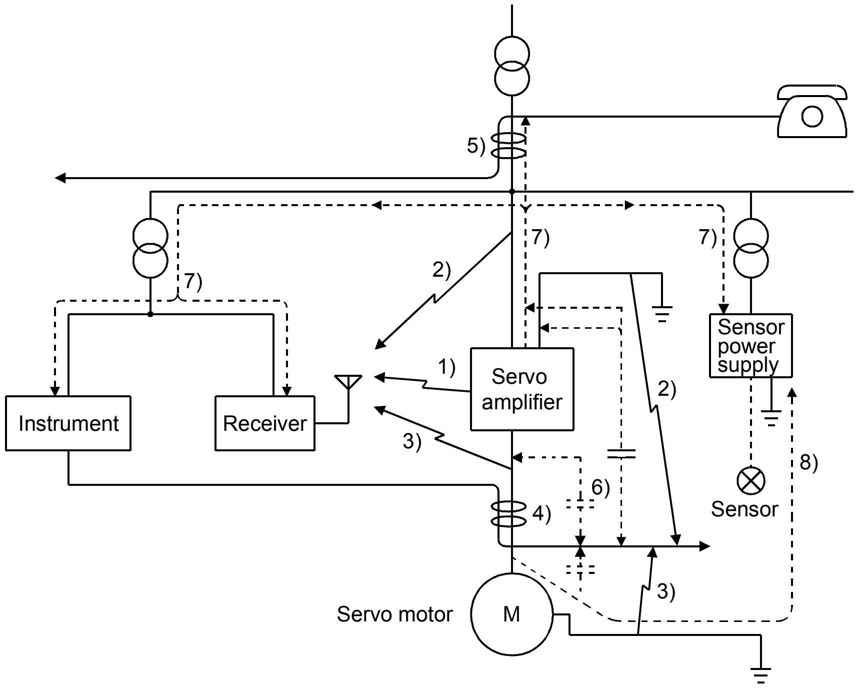

Noise transmission route	Suppression techniques
1) 2) 3)	When measuring instruments, receivers, sensors, etc. which handle weak signals and may malfunction due to noise and/or their signal cables are contained in a control box together with the servo amplifier or run near the servo amplifier, such devices may malfunction due to noises transmitted through the air. The following techniques are required. 1. Provide maximum clearance between easily affected devices and the servo amplifier. 2. Provide maximum clearance between easily affected signal cables and the I/O cables of the servo amplifier. 3. Avoid laying signal cables and power lines (the I/O cables of the servo amplifier) side by side or do not bundle them together. 4. Insert a line noise filter to the I/O cables or a radio noise filter on the input line to suppress noise radiated from the power supply cable. 5. Use shielded wires for signal and power lines or put cables in separate metal conduits.
4) 5) 6)	When the power lines and the signal cables are laid side by side or bundled together, magnetic induction noise and static induction noise will be transmitted through the signal cables and malfunction may occur. The following techniques are required. 1. Provide maximum clearance between easily affected devices and the servo amplifier. 2. Provide maximum clearance between easily affected signal cables and the I/O cables of the servo amplifier. 3. Avoid laying signal cables and power lines (the I/O cables of the servo amplifier) side by side or do not bundle them together. 4. Use shielded wires for signal and power lines or put the cables in separate metal conduits.
7)	When the power supply of peripheral devices is connected to the power supply of the servo amplifier system, noises produced by the servo amplifier may be transmitted back through the power supply cable and the devices may malfunction. The following techniques are required. 1. Insert the radio noise filter (FR-BIF) on the power lines (Input cables) of the servo amplifier. 2. Insert the line noise filter (FR-BSF01 ・ FR-BLF) on the power lines of the servo amplifier.
8)	When the cables of peripheral devices are connected to the servo amplifier to make a closed loop circuit, leakage current may flow to malfunction the peripheral devices. If so, malfunction may be prevented by disconnecting the grounding cable of the peripheral device.

(2) Noise reduction products

(a) Data line filter (Recommended)

Noise can be prevented by installing a data line filter onto the encoder cable, etc.

For example, the ZCAT3035-1330 of TDK and the ESD-SR-250 of NEC TOKIN make are available as data line filters.

As a reference example, the impedance specifications of the ZCAT3035-1330 (TDK) are indicated below.

This impedance is reference values and not guaranteed values.

Impedance[Ω]	
10 to 100MHz	100 to 500MHz
80	150

[Unit: mm]

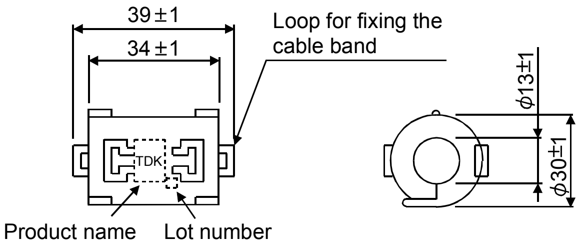

Outline drawing (ZCAT3035-1330)

(b) Surge killer

The recommended surge killer for installation to an AC relay, AC valve, or the like near the servo amplifier is shown below. Use this product or equivalent.

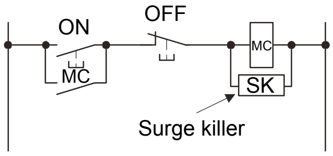

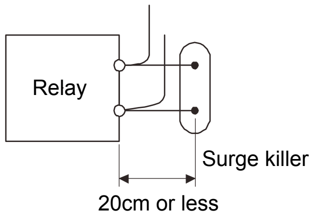

(Ex.) CR-50500 (Okaya Electric Industries)

Rated voltage AC[V]	C [μF±20%]	R [Ω±30%]	Test voltage
250	0.5	50(1/2W)	Between terminals: 625VAC, 50/60Hz 60s Between terminal and case: 2000VAC 50/60Hz 60s

Outline drawing [Unit: mm]
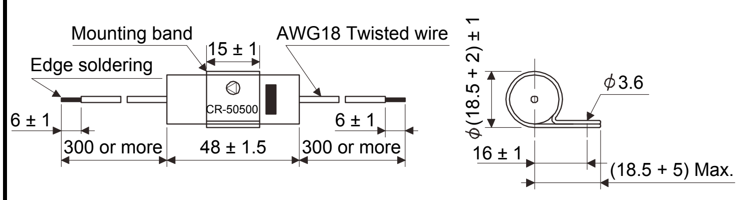

Note that a diode should be installed to a DC relay, DC valve or the like.

Maximum voltage: Not less than 4 times the drive voltage of the relay or the like

Maximum current: Not less than twice the drive current of the relay or the like

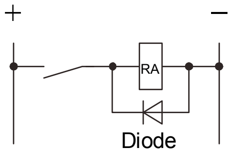

(c) Cable clamp fitting AERSBAN - ☐SET

Generally, the grounding of the shielded wire may only be connected to the connector's SD terminal. However, the effect can be increased by directly connecting the cable to a ground plate as shown below.

Install the ground plate near the servo amplifier for the encoder cable. Peel part of the cable sheath to expose the external conductor, and press that part against the ground plate with the cable clamp. If the cable is thin, clamp several cables in a bunch.

The clamp comes as a set with the ground plate.

[Unit: mm]

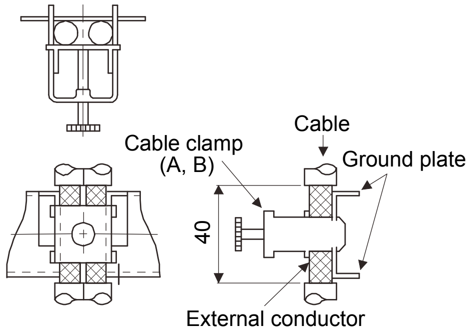

Clamp section diagram

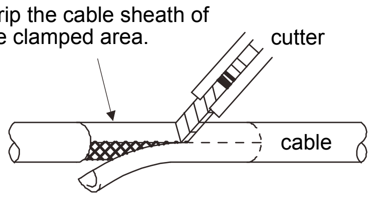

・ Outline drawing

[Unit: mm]

Ground plate

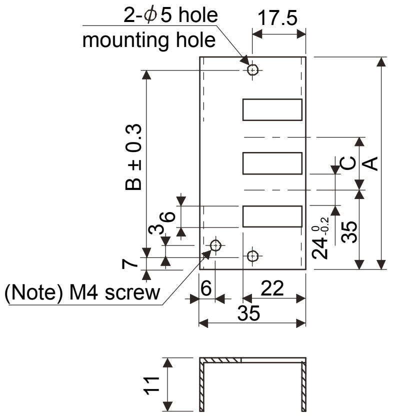

[Unit: mm]

Clamp Section diagram

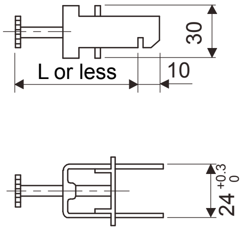

Note. Screw hole for grounding. Connect it to the ground plate of the control box.

Type	A	B	C	Accessory fittings
AERSBAN-DSET	100	86	30	Clamp A: 2pcs.
AERSBAN-ESET	70	56		Clamp B: 1pc.

Clamp fitting	L
A	70
B	45

(d) Line noise filter (FR-BSF01, FR-BLF)

This filter is effective in suppressing noises radiated from the power supply side and output side of the servo amplifier and also in suppressing high-frequency leakage current (zero-phase current) especially within 0.5MHz to 5MHz band.

Connection diagram	Outline drawing [Unit: mm]
The line noise filters can be installed on lines of the main power supply (L1, L2, and L3) and of the servo motor power (U, V, and W). Pass each of the wires through the line noise filter an equal number of times in the same direction. For the main power supply, the effect of the filter rises as the number of passes increases, but generally four passes would be appropriate. For the servo motor power lines, passes must be four times or less. Do not pass the grounding wire through the filter, or the effect of the filter will drop. Wind the wires by passing through the filter to satisfy the required number of passes as shown in Example 1. If the wires are too thick to wind, use two or more filters to have the required number of passes as shown in Example 2. Place the line noise filters as close to the servo amplifier as possible for their best performance. Example 1 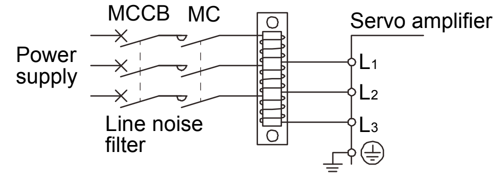 (Number of turns: 4) Example 2 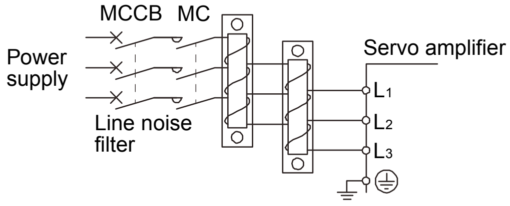 Two filters are used (Total number of turns: 4)	FR-BSF01 (for wire size 3.5mm² (AWG12) or less) 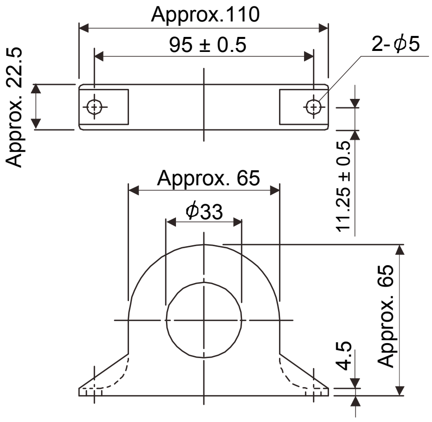
	FR-BLF(for wire size 5.5mm² (AWG10) or more) 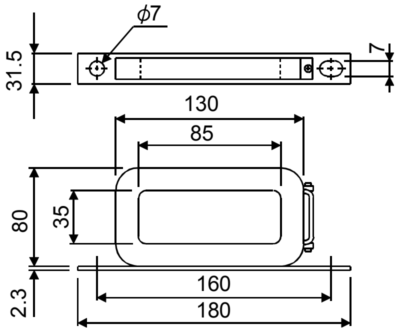

(e) Radio noise filter (FR-BIF-(H))

This filter is effective in suppressing noises radiated from the power supply side of the servo amplifier especially in 10MHz and lower radio frequency bands. The FR-BIF-(H) is designed for the input only

200V class: FR-BIF

400V class: FR-BIF-H

<table>
<tr><th>Connection diagram</th><th>Outline drawing (Unit: mm)</th></tr>
<tr><td>

Make the connection cables as short as possible. Grounding is always required. When using the FR-BIF with a single-phase power supply, always insulate the wires that are not used for wiring.

- MR-J3-350T or less, MR-J3-200T4 or less

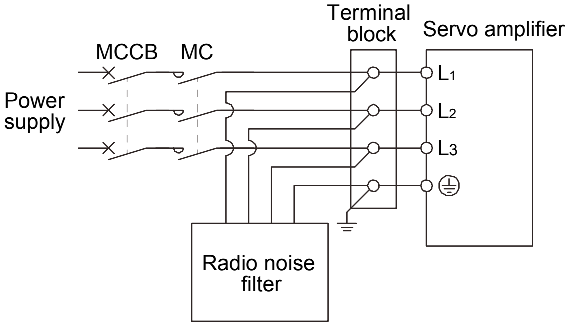

- MR-J3-500T or more, MR-J3-350T4 or more

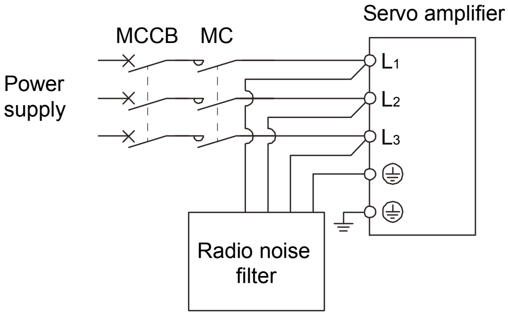

</td><td>

Leakage current: 4mA

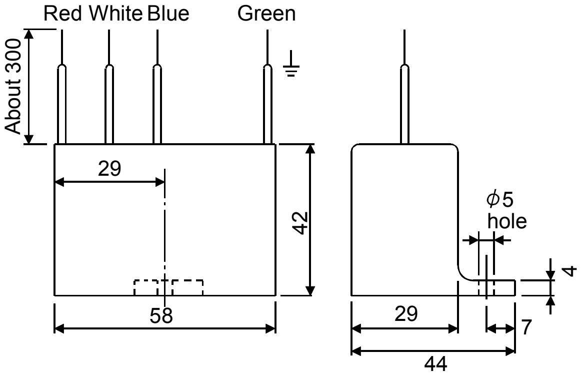

</td></tr>
</table>

(f) Varistors for input power supply (Recommended)

Varistors are effective to prevent exogenous noise and lightning surge from entering the servo amplifier. When using a varistor, connect it between each phase of the input power supply of the equipment. For varistors, the TND20V-431K, TND20V-471K and TND20V-102K, manufactured by NIPPON CHEMI-CON, are recommended. For detailed specification and usage of the varistors, refer to the manufacturer catalog.

Power supply voltage	Varistor	Maximum rating					Maximum limit voltage		Static capacity (reference value)	Varistor voltage rating (range) V1mA
		Permissible circuit voltage		Surge current immunity	Energy immunity	Rated pulse power				
		AC[V_{rms}]	DC[V]	8/20μs[A]	2ms[J]	[W]	[A]	[V]	[pF]	[V]
100V class	TND20V-431K	275	350	10000/1 time	195	1.0	100	710	1300	430(387 to 473)
200V class	TND20V-471K	300	385	7000/2 times	215			775	1200	470(423 to 517)
400V class	TND20V-102K	625	825	7500/1 time 6500/2 times	400			1650	500	1000(900 to 1100)

[Unit: mm]

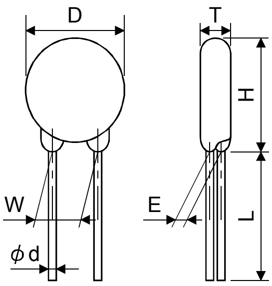

Model	D Max.	H Max.	T Max.	E ±1.0	(Note)L min.	φd ±0.05	W ±1.0
TND20V-431K	21.5	24.5	6.4	3.3	20	0.8	10.0
TND20V-471K			6.6	3.5			
TND20V-102K	22.5	25.5	9.5	6.4			

Note. For special purpose items for lead length (L), contact the manufacturer.

14.15 Earth-leakage current breaker

(1) Selection method

High-frequency chopper currents controlled by pulse width modulation flow in the AC servo circuits.
Leakage currents containing harmonic contents are larger than those of the motor which is run with a commercial power supply.
Select an earth-leakage current breaker according to the following formula, and ground the servo amplifier, servo motor, etc. securely.
Make the input and output cables as short as possible, and also make the grounding cable as long as possible (about 30cm) to minimize leakage currents.

$$\text{Rated sensitivity current} \geq 10 \cdot \{Ig1+Ign+Iga+K \cdot (Ig2+Igm)\} \text{ [mA]} \quad (14.1)$$

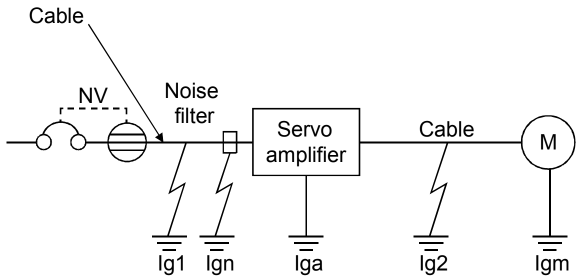

K: Constant considering the harmonic contents

Earth-leakage current breaker		K
Type	Mitsubishi products	
Models provided with harmonic and surge reduction techniques	NV-SP NV-SW NV-CP NV-CW NV-L	1
General models	BV-C1 NFB NV-L	3

Ig1: Leakage current on the electric channel from the earth-leakage current breaker to the input terminals of the servo amplifier (Found from Fig. 14.4.)

Ig2: Leakage current on the electric channel from the output terminals of the servo amplifier to the servo motor (Found from Fig. 14.4.)

Ign: Leakage current when a filter is connected to the input side (4.4mA per one FR-BIF-(H))

Iga: Leakage current of the servo amplifier (Found from Table 14.5.)

Igm: Leakage current of the servo motor (Found from Table 14.4.)

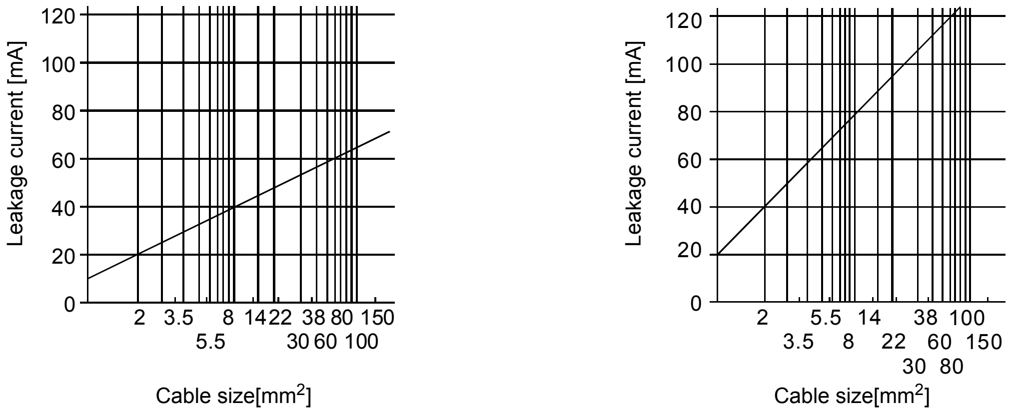

a. 200V class

b. 400V class

Fig. 14.4 Leakage current example (Ig1, Ig2) per 1 km for CV cable run in metal conduit

Table 14.4 Servo motor’s leakage current example (Igm)

Servo motor output [kW]	Leakage current [mA]
0.05 to 1	0.1
2	0.2
3.5	0.3
5	0.5
7	0.7
11	1.0
15	1.3
22	2.3

Table 14.5 Servo amplifier's leakage current example (Iga)

Servo amplifier capacity [kW]	Leakage current [mA]
0.1 to 0.6	0.1
0.75 to 3.5 (Note)	0.15
5・7	2
11・15	5.5
22	7

Note. For the 3.5kW of 400V class, leakage current is 2mA, which is the same as for 5kW and 7kW.

Table 14.6 Earth-leakage circuit breaker selection example

Servo amplifier	Rated sensitivity current of earth-leakage circuit breaker [mA]
MR-J3-10T to MR-J3-350T MR-J3-10T1 to MR-J3-40T1 MR-J3-60T4 to MR-J3-350T4	15
MR-J3-500T(4)	30
MR-J3-700T(4)	50
MR-J3-11KT(4) to MR-J3-22KT(4)	100

(2) Selection example

Indicated below is an example of selecting an earth-leakage current breaker under the following conditions.

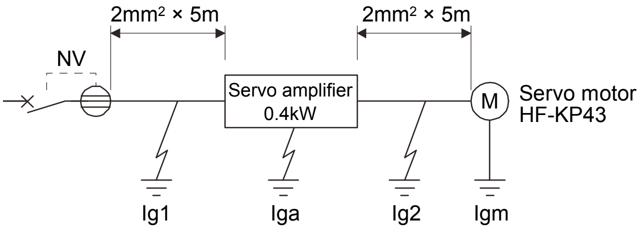

Use an earth-leakage current breaker generally available.
Find the terms of Equation (14.1) from the diagram.

$$Ig1 = 20 \cdot \frac{5}{1000} = 0.1 \text{ [mA]}$$

$$Ig2 = 20 \cdot \frac{5}{1000} = 0.1 \text{ [mA]}$$

Ign = 0 (not used)

Iga = 0.1 [mA]

Igm = 0.1 [mA]

Insert these values in Equation (14.1).

$$Ig \geq 10 \cdot \{0.1+0+0.1+1 \cdot (0.1+0.1)\}$$

$$\geq 4.0 \text{ [mA]}$$

According to the result of calculation, use an earth-leakage current breaker having the rated sensitivity current (Ig) of 4.0[mA] or more. An earth-leakage current breaker having Ig of 15[mA] is used with the NV-SP/SW/CP/CW/HW series.

14.16 EMC filter (recommended)

For compliance with the EN EMC directive, it is recommended to use the following filter. Some EMC filters are large in leakage current.

(1) Combination with the servo amplifier

Servo amplifier	Recommended filter (Soshin Electric)				Mass [kg]
	Model	Rated current [A]	Rated voltage [V AC]	Leakage current [mA]	
MR-J3-10T to MR-J3-100T MR-J3-10T1 to MR-J3-40T1	(Note) HF3010A-UN	10	250	5	3.5
MR-J3-250TN ・ MR-J3-350T	(Note) HF3030A-UN	30			5.5
MR-J3-500T ・ MR-J3-700T	(Note) HF3040A-UN	40		6.5	6
MR-J3-11KT to MR-J3-22KT	(Note) HF3100A-UN	100			12
MR-J3-60T4 to MR-J3-100T4	TF3005C-TX	5	500	5.5	6
MR-J3-200T4 to MR-J3-700T4	TF3020C-TX	20			
MR-J3-11KT4	TF3030C-TX	30			7.5
MR-J3-15KT4	TF3040C-TX	40			12.5
MR-J3-22KT4	TF3060C-TX	60			

Note. A surge protector is separately required to use any of these EMC filters.

(2) Connection example

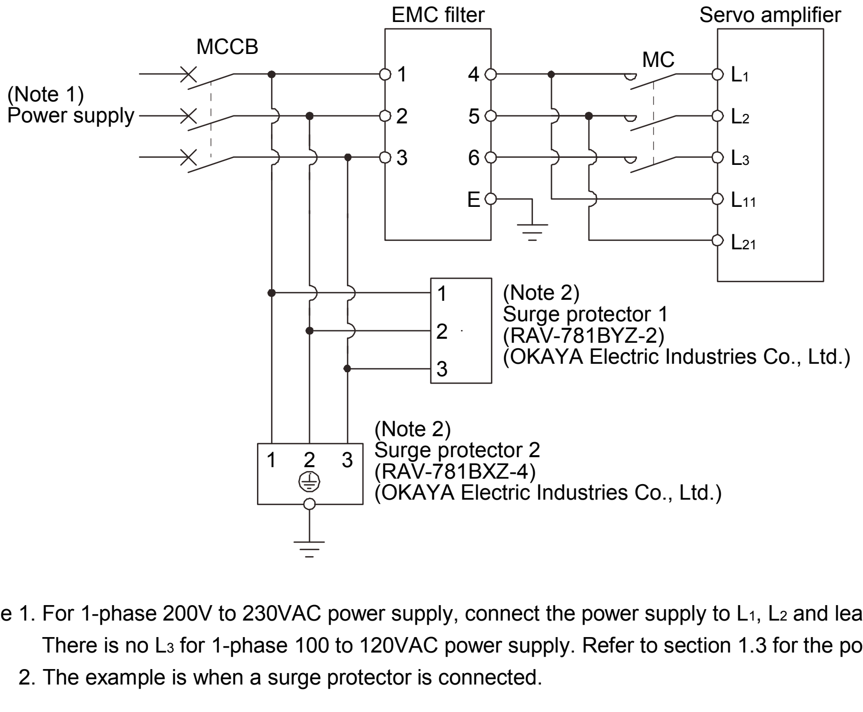

Note 1. For 1-phase 200V to 230VAC power supply, connect the power supply to L_1, L_2 and leave L_3 open.
There is no L_3 for 1-phase 100 to 120VAC power supply. Refer to section 1.3 for the power supply specification.
2. The example is when a surge protector is connected.

(3) Outline drawing

(a) EMC filter

HF3010A-UN

[Unit: mm]

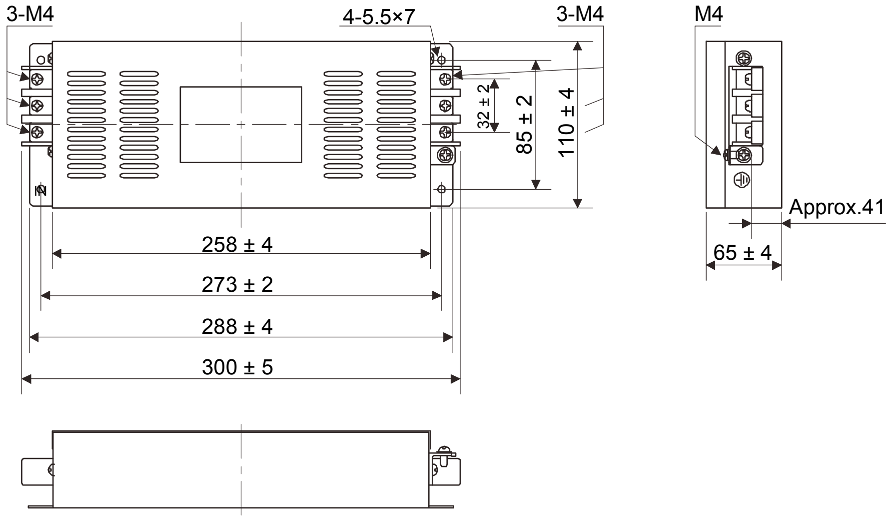

HF3030A-UN・HF-3040A-UN

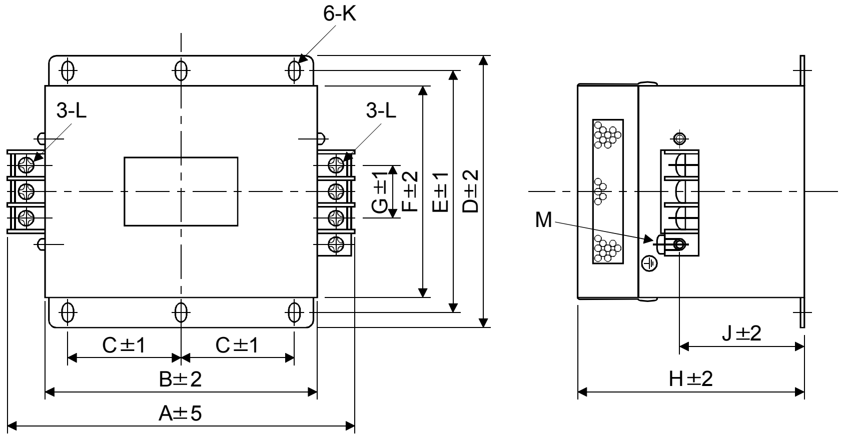

Model	Dimensions [mm]											
	A	B	C	D	E	F	G	H	J	K	L	M
HF3030A-UN	260	210	85	155	140	125	44	140	70	R3.25, length 8	M5	M4
HF3040A-UN												

HF3100A-UN

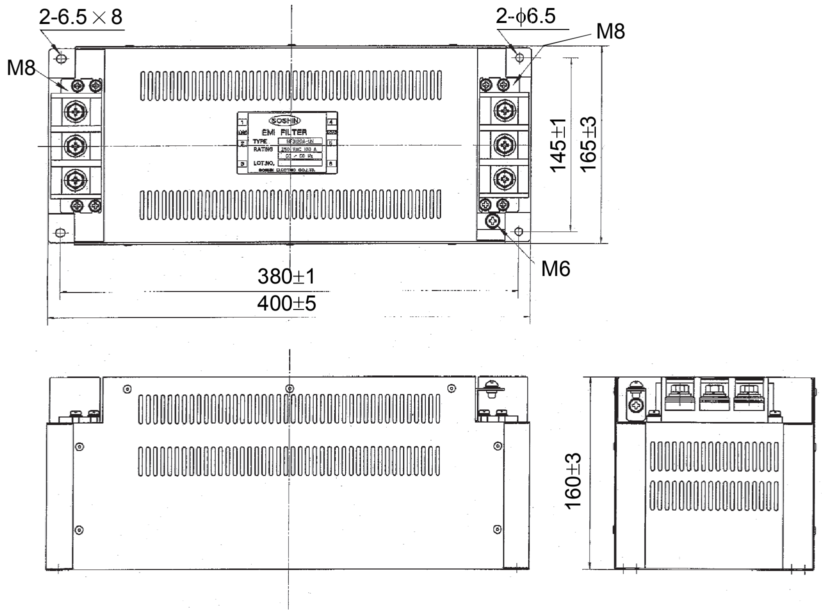

TF3005C-TX・TX3020C-TX・TF3030C-TX

[Unit: mm]

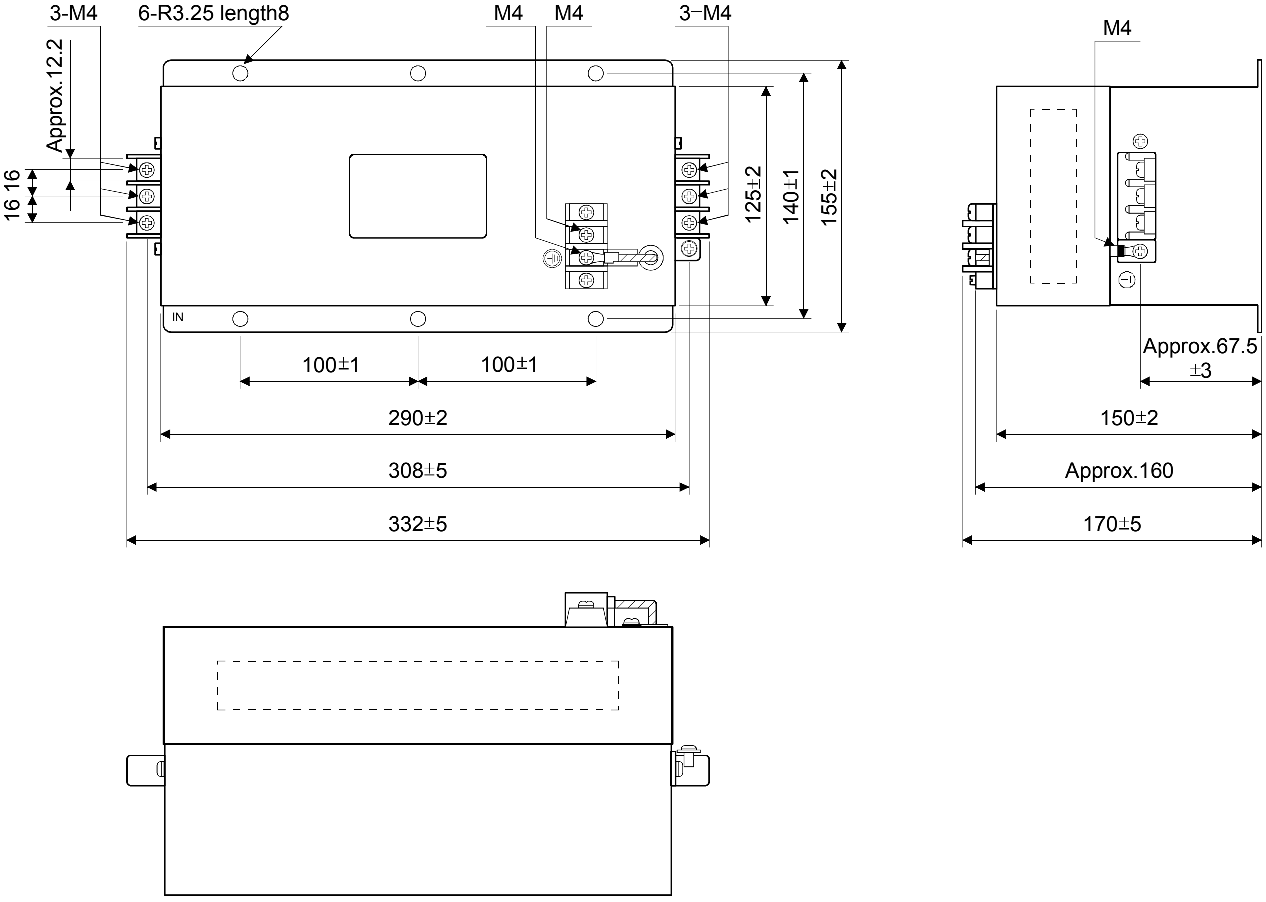

TF3040C-TX・TF3060C-TX

[Unit: mm]

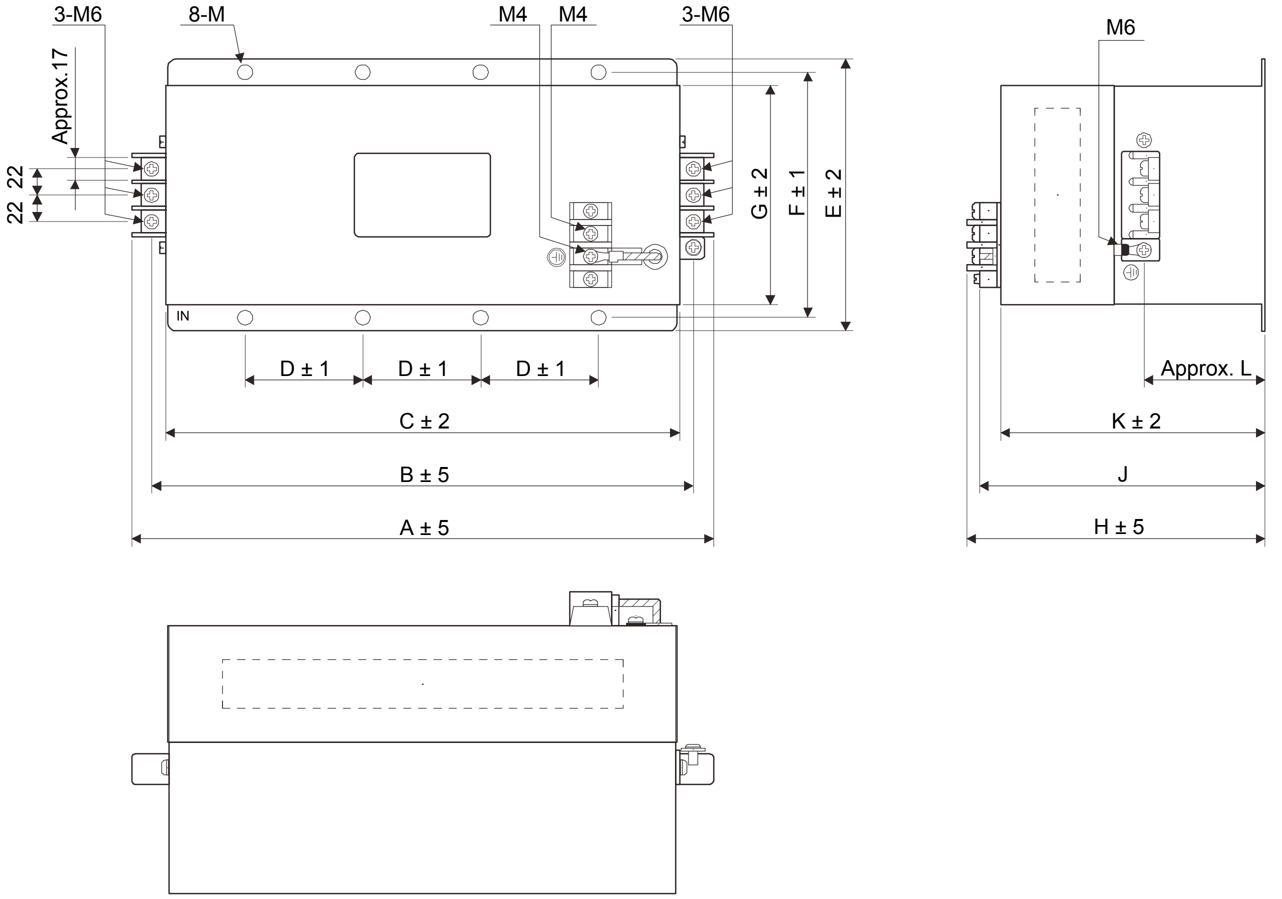

Model	Dimensions [mm]											
	A	B	C	D	E	F	G	H	J	K	L	M
TF3040C-TX TF3060C-TX	438	412	390	100	175	160	145	200	Approx.190	180	Approx.91.5	R3.25 length 8 (M6)

(b) Surge protector

RAV-781BYZ-2

[Unit: mm]

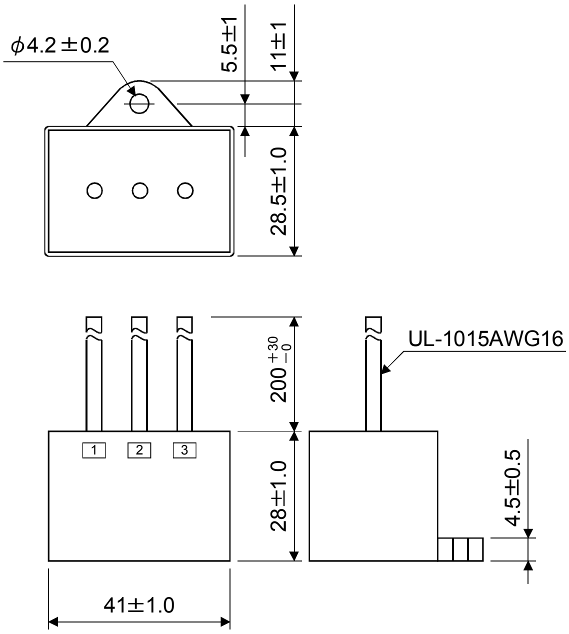

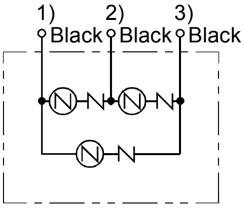

RAV-781BXZ-4

[Unit: mm]

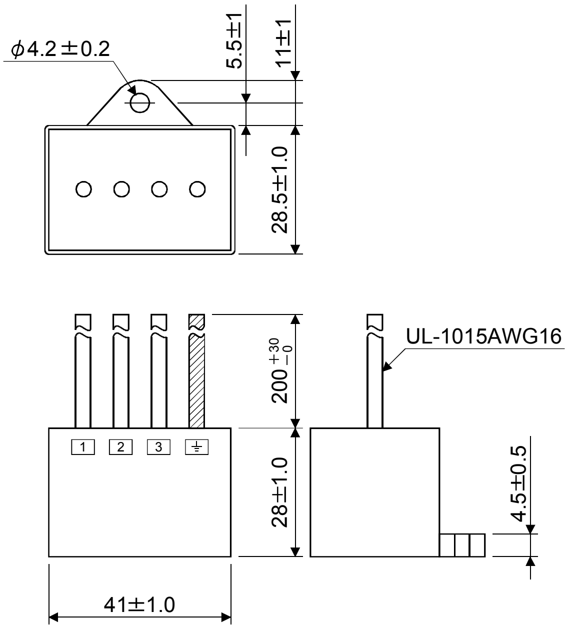

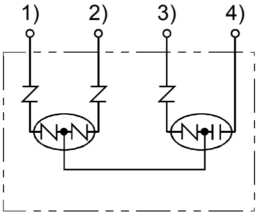

14.17 MR-HDP01 manual pulse generator

Use the MR-HDP01 manual pulse generator to rotate the servo motor. To change the multiplication to pulse signals which MR-HDP01 generates with external input signals, assign manual pulse generator multiplication 1 (TP0) and manual pulse generator multiplication 2 (TP1) to the CN6 connector pins using parameter No.PD06 to PD08.

(1) Specifications

Item		Specifications
Power supply	Voltage	4.5 to 13.2VDC
	Current consumption	60mA or less
interface		Output current max. 20mA for open collector output
Pulse signal form		A-phase, B-phase, 2 signals of 90° phase difference
Pulse resolution		100pulse/rev
Max. speed		600r/min moment, 200r/min normally
Operating temperature range		−10℃ to +60℃ (14 to 140°F)
Storage temperature range		−30℃ to +80℃ (−22 to 176°F)

(2) Connection example

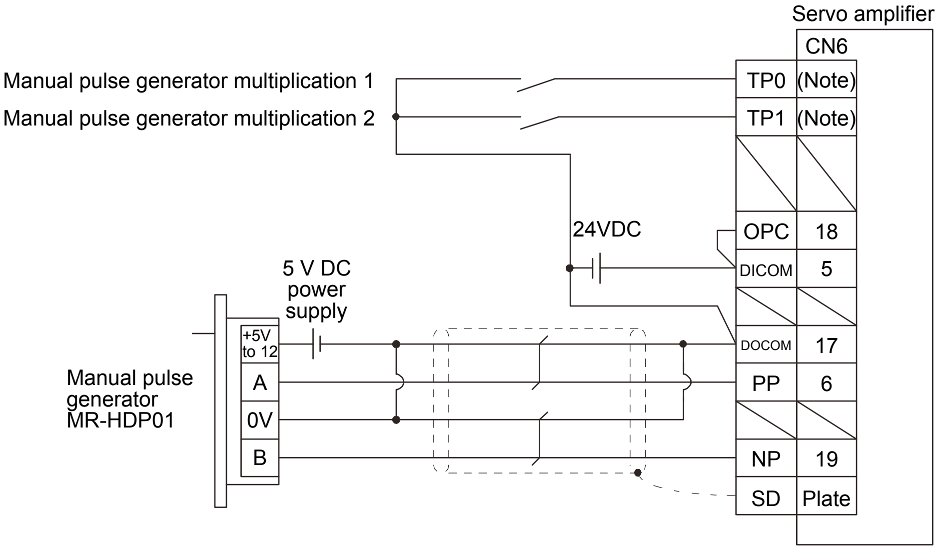

Note. Assign TP0 and TP1 using parameter No.PD06 to PD08.

(3) Terminal assignment

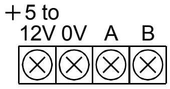

Signal	Description
+5 to 12V	Power input
0V	Common for power and signal
A	A-phase pulse output
B	B-phase pulse output

(4) Installation

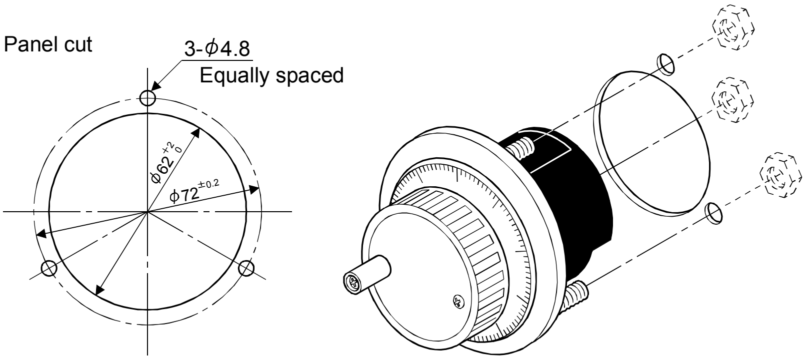

(5) Outline drawing

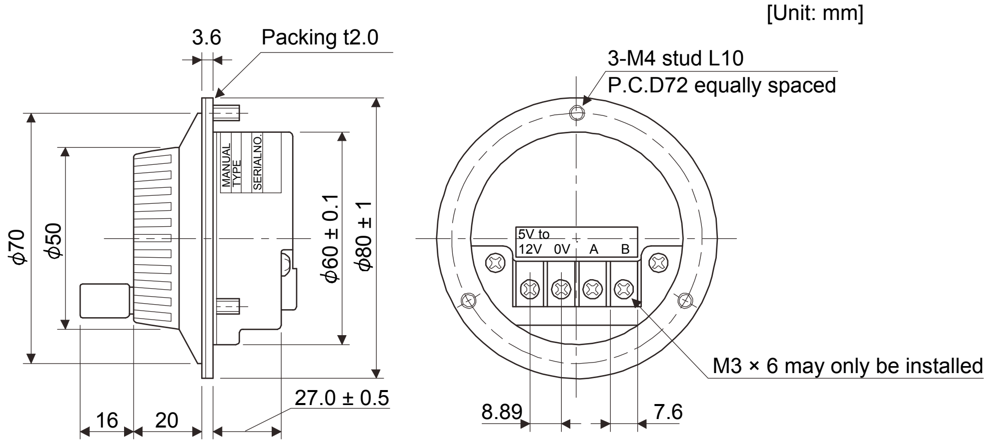

15. COMMUNICATION FUNCTION

POINT

- The USB communication function (CN5 connector) and the RS-422 communication function (CN3 connector) are mutually exclusive. They cannot be used together.

Using the serial communication function of RS-422, this servo amplifier enables servo operation, parameter change, monitor function, etc.

15.1 Configuration

(1) Single axis

Operate the single-axis servo amplifier. It is recommended to use the following cable.

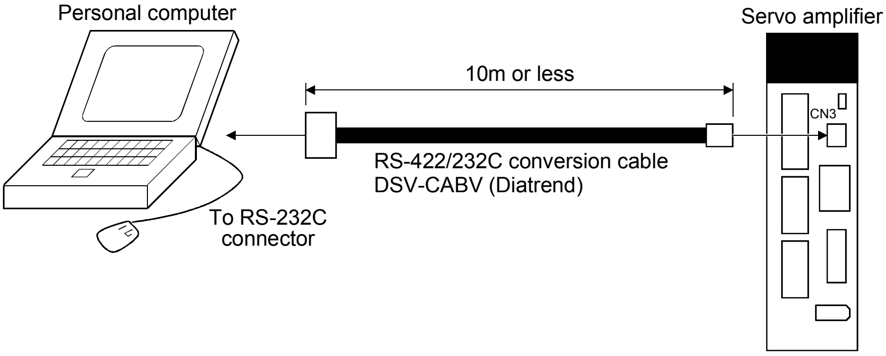

(2) Multidrop connection

(a) Diagrammatic sketch

Up to 32 axes of servo amplifiers from stations 0 to 31 can be operated on the same bus.

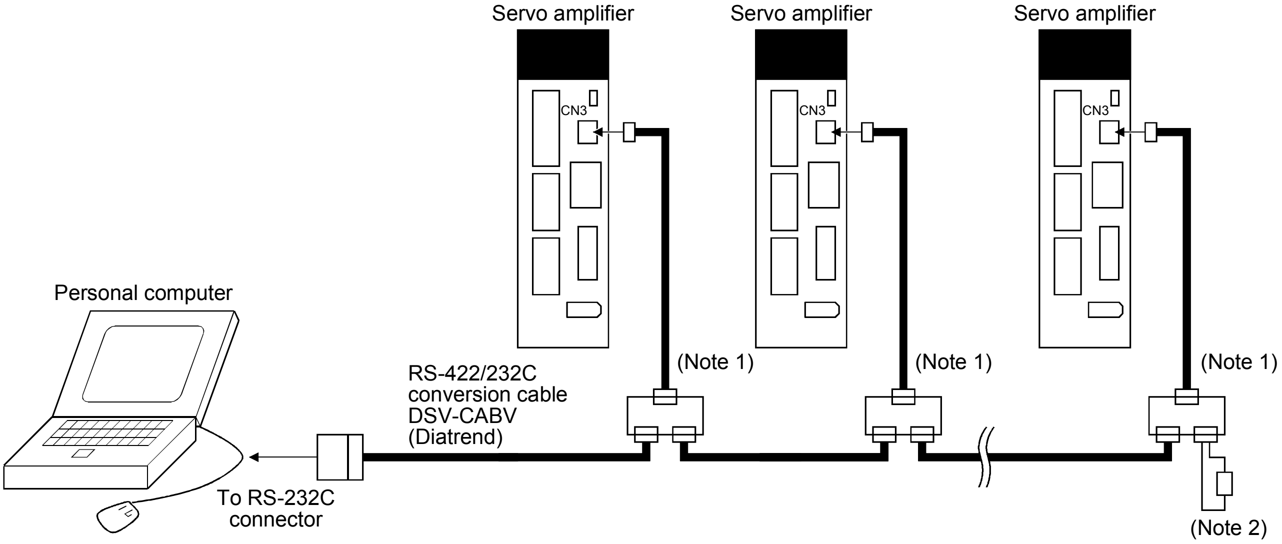

Note 1. The BMJ-8 (Hakko Electric Machine Works) is recommended as the branch connector.

2. The final axis must be terminated between RDP (pin No.3) and RDN (pin No.6) on the receiving side (servo amplifier) with a 150Ω resistor.

(b) Cable connection diagram

Wire the cables as shown below.

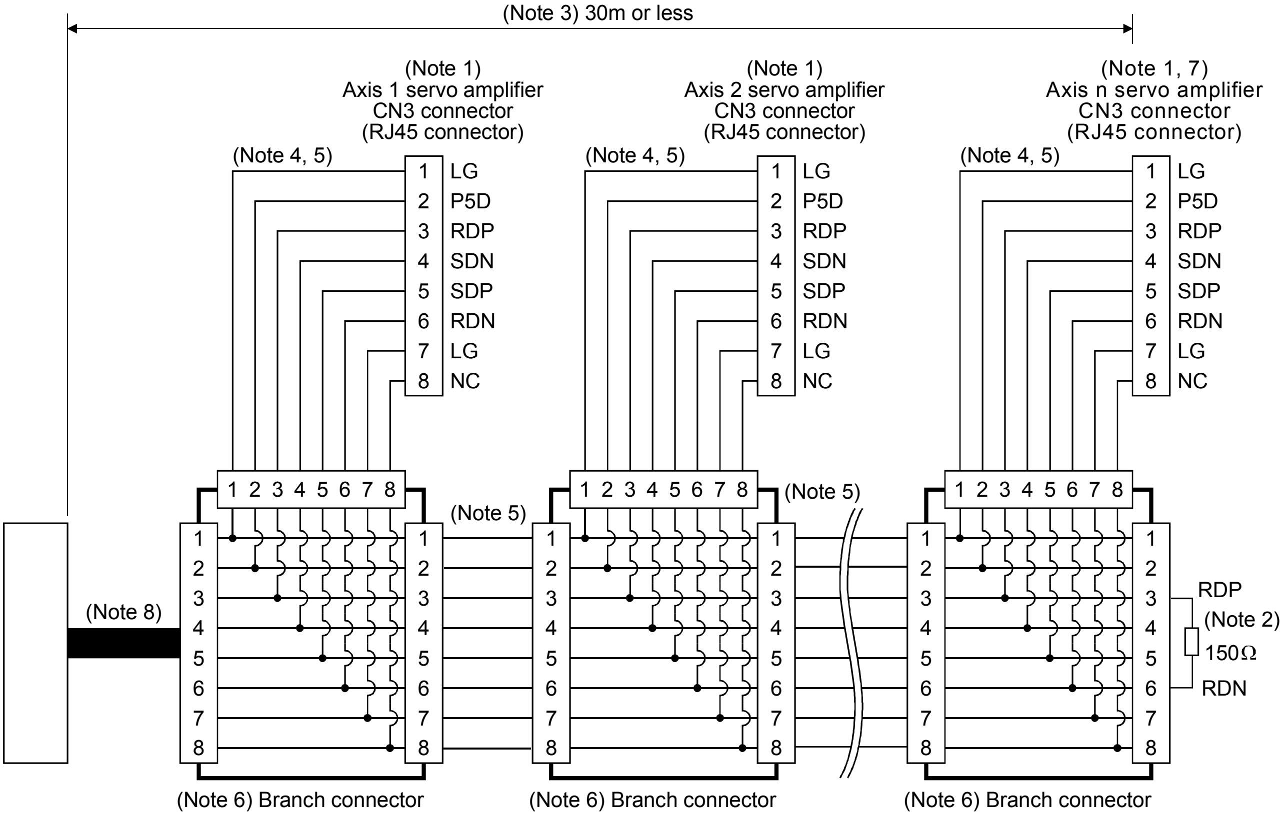

Note 1. Recommended connector (Hirose Electric)

Plug: TM10P-88P

Connection tool: CL250-0228-1

2. The final axis must be terminated between RDP (pin No.3) and RDN (pin No.6) on the receiving side (servo amplifier) with a 150Ω resistor.
3. The overall length is 30m or less in low-noise environment.
4. The wiring between the branch connector and servo amplifier should be as short as possible.
5. Use the EIA568-compliant cable (10BASE-T cable, etc.).
6. Recommended branch connector: BMJ-8 (Hakko Electric Machine Works)
7. n ≤ 32 (Up to 32 axes can be connected.)
8. RS-422/232C conversion cable DSV-CABV (Diatrend).

15.2 Communication specifications

15.2.1 Communication overview

This servo amplifier is designed to send a reply on receipt of an instruction. The device which gives this instruction (e.g. personal computer) is called a master station and the device which sends a reply in response to the instruction (servo amplifier) is called a slave station. When fetching data successively, the master station repeatedly commands the slave station to send data.

Item	Description
Baud rate	9600/19200/38400/57600/115200 asynchronous system
Transfer code	Start bit : 1 bit Data bit : 8 bits Parity bit : 1 bit (even) Stop bit : 1 bit
Transfer protocol	Character system, half-duplex communication system

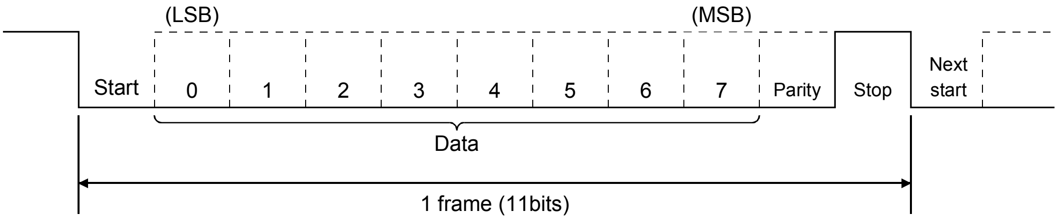

15.2.2 Parameter setting

When the USB/RS-422 communication function is used to operate the servo, set the communication specifications of the servo amplifier in the corresponding parameters.
After setting the values of these parameters, they are made valid by switching power off once, then on again.

(1) Serial communication baud rate

Choose the communication speed. Match this value to the communication speed of the sending end (master station).

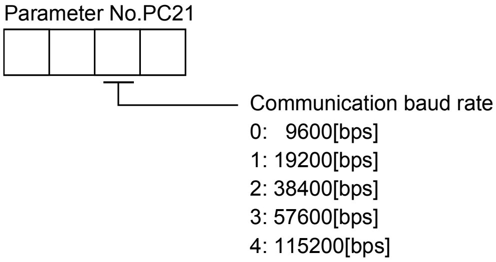

(2) RS-422 communication response delay time

Set the time from when the servo amplifier (slave station) receives communication data to when it sends back data. Set "0" to send back data in less than 800μs or "1" to send back data in 800μs or more.

(3) Station number setting

Set the station number of the servo amplifier in parameter No.PC20. The setting range is station 0 to 31.

15.3 Protocol

15.3.1 Transmission data configuration

Since up to 32 axes may be connected to the bus, add a station number or group to the command, data No., etc. to determine the destination servo amplifier of data communication. Set the station number to each servo amplifier using the parameter and set the group to each station using the communication command. Transmission data is valid for the servo amplifier of the specified station number or group.
When "*" is set as the station number added to the transmission data, the transmission data is made valid for all servo amplifiers connected. However, when return data is required from the servo amplifier in response to the transmission data, set "0" to the station number of the servo amplifier which must provide the return data.

(1) Transmission of data from the controller to the servo

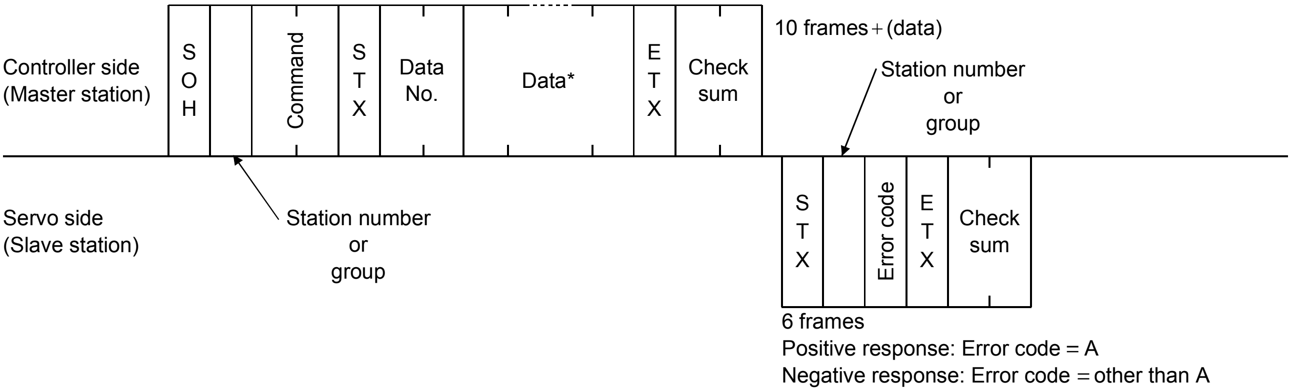

(2) Transmission of data request from the controller to the servo

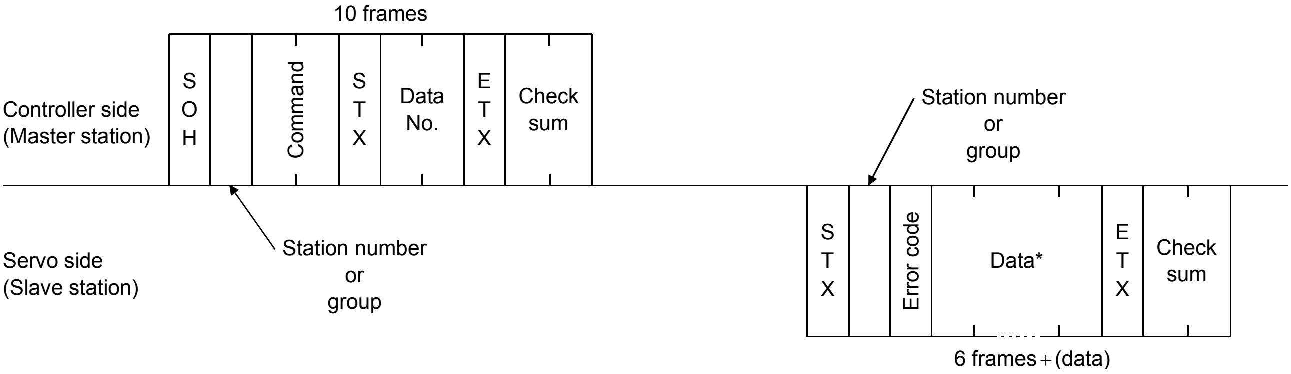

(3) Recovery of communication status by time-out

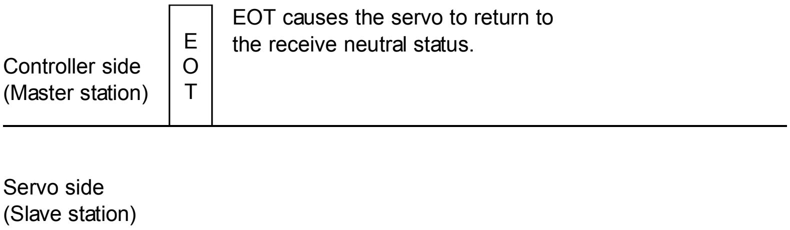

(4) Data frames
The data length depends on the command.

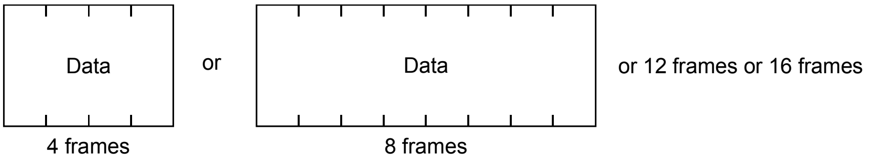

15.3.2 Character codes

(1) Control codes

Code name	Hexadecimal (ASCII code)	Description	Personal computer terminal key operation (General)
SOH	01H	start of head	ctrl + A
STX	02H	start of text	ctrl + B
ETX	03H	end of text	ctrl + C
EOT	04H	end of transmission	ctrl + D

(2) Codes for data

ASCII codes are used.

b_8	0	0	0	0	0	0	0	0
b_7	0	0	0	0	1	1	1	1
b_6	0	0	1	1	0	0	1	1
b_5	0	1	0	1	0	1	0	1

b_8 to b_5	b_4	b_3	b_2	b_1
	0	0	0	0
	0	0	0	1
	0	0	1	0
	0	0	1	1
	0	1	0	0
	0	1	0	1
	0	1	1	0
	0	1	1	1
	1	0	0	0
	1	0	0	1
	1	0	1	0
	1	0	1	1
	1	1	0	0
	1	1	0	1
	1	1	1	0
	1	1	1	1

C R	0	1	2	3	4	5	6	7
0	NUL	DLE	Space	0	@	P	`	p
1	SOH	DC_1	!	1	A	Q	a	q
2	STX	DC_2	“	2	B	R	b	r
3	ETX	DC_3	#	3	C	S	c	s
4			$	4	D	T	d	t
5			%	5	E	U	e	u
6			&	6	F	V	f	v
7			‘	7	G	W	g	w
8			(	8	H	X	h	x
9			)	9	I	Y	i	y
10			*	:	J	Z	j	z
11			+	;	K	[	k	{
12			,	<	L	¥	l	|
13			−	=	M	]	m	}
14			.	>	N	^	n	¯
15			/	?	O	_	o	DEL

(3) Station numbers

You may set 32 station numbers from station 0 to station 31 and the ASCII unit codes are used to specify the stations.

Station number	0	1	2	3	4	5	6	7	8	9	10	11	12	13	14	15
ASCII code	0	1	2	3	4	5	6	7	8	9	A	B	C	D	E	F

Station number	16	17	18	19	20	21	22	23	24	25	26	27	28	29	30	31
ASCII code	G	H	I	J	K	L	M	N	O	P	Q	R	S	T	U	V

For example, "30H" is transmitted in hexadecimal for the station number of "0" (axis 1).

(4) Group

Group	a	b	c	d	e	f	All group
ASCII code	a	b	c	d	e	f	*

For example, "61H" is transmitted in hexadecimal for group a.

15.3.3 Error codes

Error codes are used in the following cases and an error code of single-code length is transmitted.
On receipt of data from the master station, the slave station sends the error code corresponding to that data to the master station.
The error code sent in upper case indicates that the servo is normal and the one in lower case indicates that an alarm occurred.

Error code		Error name	Description	Remarks
Servo normal	Servo alarm			
[A]	[a]	Normal processing	Data transmitted was processed properly.	Positive response
[B]	[b]	Parity error	Parity error occurred in the transmitted data.	Negative response
[C]	[c]	Checksum error	Checksum error occurred in the transmitted data.	
[D]	[d]	Character error	Character not existing in the specifications was transmitted.	
[E]	[e]	Command error	Command not existing in the specifications was transmitted.	
[F]	[f]	Data No. error	Data No. not existing in the specifications was transmitted.	

15.3.4 Checksum

The checksum is an ASCII-coded hexadecimal representing the lower two digits of the sum of ASCII-coded hexadecimal numbers up to ETX, with the exception of the first control code (STX or SOH).

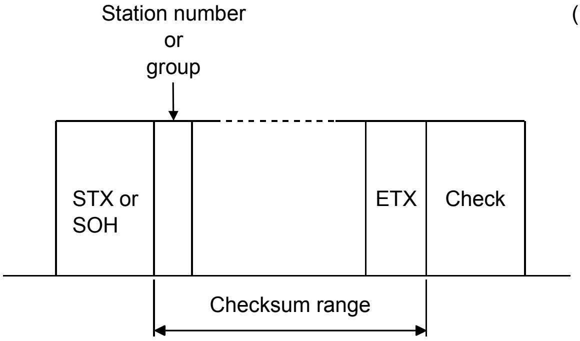

(Example)

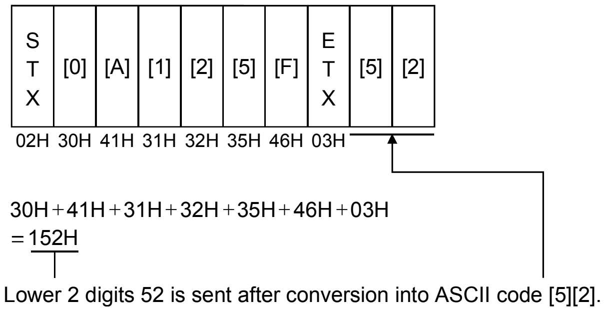

15.3.5 Time-out processing

The master station transmits EOT when the slave station does not start reply processing (STX is not received) 300ms after the master station has ended communication processing. 100ms after that, the master station retransmits the message. Time-out occurs if the slave station does not answer after the master station has performed the above communication processing three times. (Communication error)

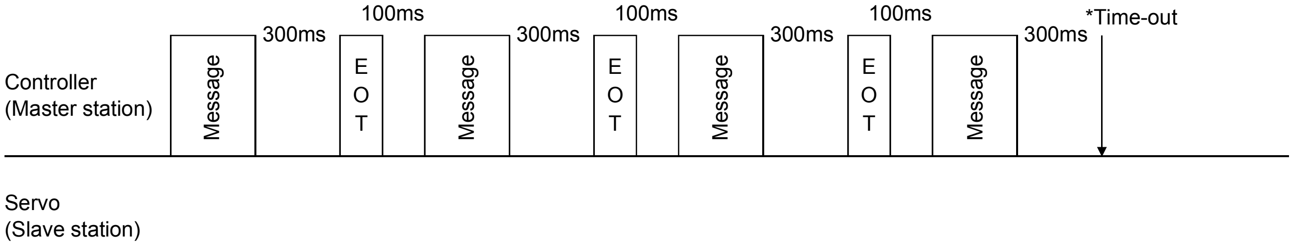

15.3.6 Retry processing

When a fault occurs in communication between the master and slave stations, the error code in the response data from the slave station is a negative response code ([B] to [F], [b] to [f]). In this case, the master station retransmits the message which was sent at the occurrence of the fault. A communication error occurs if the above processing is repeated and results in the error three or more consecutive times.

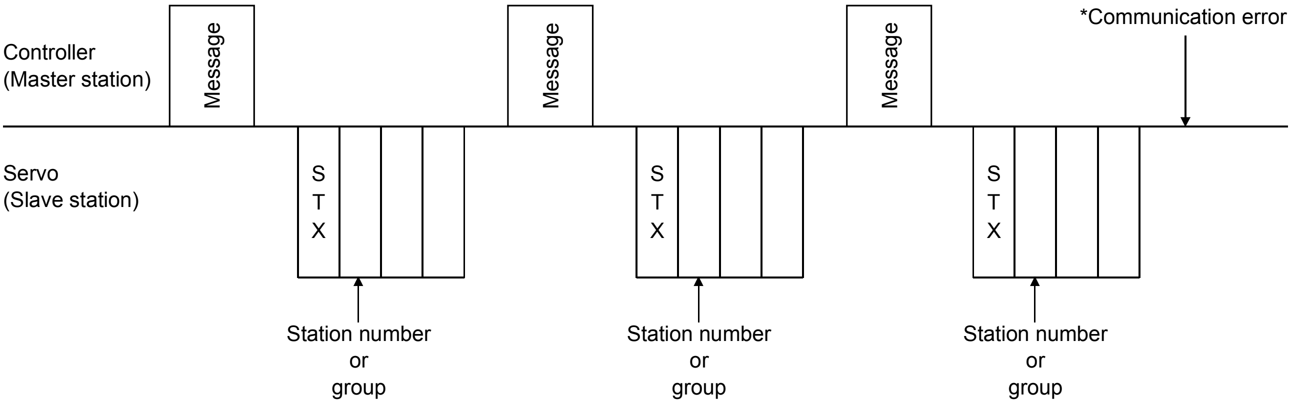

Similarly, when the master station detects a fault (e.g. checksum, parity) in the response data from the slave station, the master station retransmits the message which was sent at the occurrence of the fault. A communication error occurs if the retry processing is performed three times.

15.3.7 Initialization

After the slave station is switched on, it cannot reply to communication until the internal initialization processing terminates. Hence, at power-on, ordinary communication should be started after.

(1) 1s or more time has elapsed after the slave station is switched on; and

(2) Making sure that normal communication can be made by reading the parameter or other data which does not pose any safety problems.

15.3.8 Communication procedure example

The following example reads the set value of alarm history (last alarm) from the servo amplifier of station 0.

Data item	Value	Description
Station number	0	Servo amplifier station 0
Command	33	Read command
Data No.	10	Alarm history (last alarm)

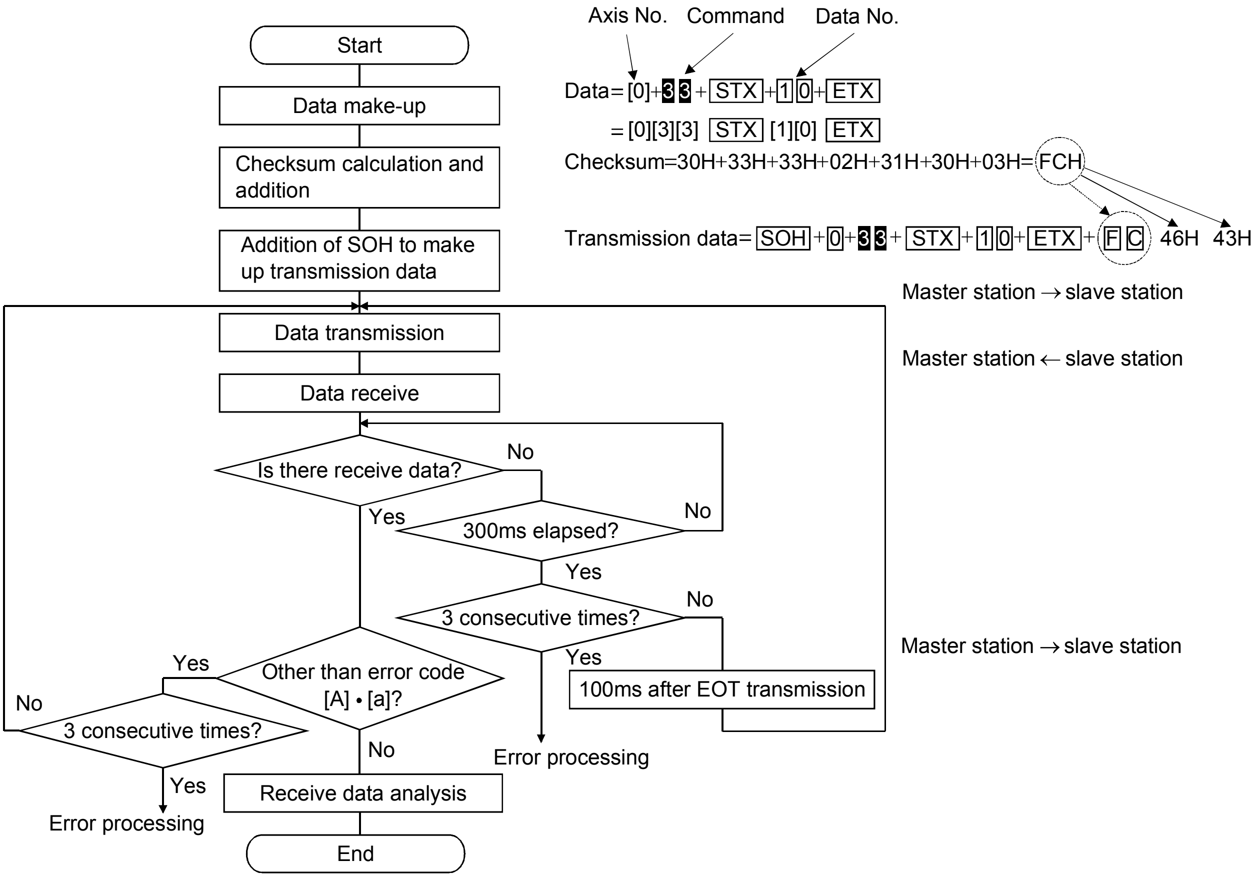

15.4 Command and data No. list

> **POINT**
>
> - If the command and data No. are the same, the description may be different depending on models of servo amplifiers.

15.4.1 Read commands

(1) Status display (Command [0][1])

Command	Data No.	Description	Display item	Frame length
[0] [1]	[0] [0]	Status display name and unit	Current position	16
	[0] [1]		Command position	
	[0] [2]		Command remaining distance	
	[0] [3]		Point table No.	
	[0] [4]		Cumulative feedback pulses	
	[0] [5]		Servo motor speed	
	[0] [6]		Droop pulses	
	[0] [7]			
	[0] [8]			
	[0] [9]			
	[0] [A]		Regenerative load ratio	
	[0] [B]		Effective load ratio	
	[0] [C]		Peak load ratio	
	[0] [D]		Instantaneous torque	
	[0] [E]		Position within one-revolution	
	[0] [F]		ABS counter	
	[1] [0]		Load inertia moment ratio	
	[1] [1]		Bus voltage	
	[8] [0]	Status display data value and processing information	Current position	12
	[8] [1]		Command position	
	[8] [2]		Command remaining distance	
	[8] [3]		Point table No.	
	[8] [4]		Cumulative feedback pulses	
	[8] [5]		Servo motor speed	
	[8] [6]		Droop pulses	
	[8] [7]			
	[8] [8]			
	[8] [9]			
	[8] [A]		Regenerative load ratio	
	[8] [B]		Effective load ratio	
	[8] [C]		Peak load ratio	
	[8] [D]		Instantaneous torque	
	[8] [E]		Position within one-revolution	
	[8] [F]		ABS counter	
	[9] [0]		Load inertia moment ratio	
	[9] [1]		Bus voltage	

(2) Parameters (Command [0][4] ･ [0][5] ･ [0][6] ･ [0][7] ･ [0][8] ･ [0][9])

Command	Data No.	Description	Frame length
[0] [4]	[0] [1]	Parameter group read 0000: Basic setting parameter (No.PA□□) 0001: Gain filter parameter (No.PB□□) 0002: Extension setting parameter (No.PC□□) 0003: I/O setting parameter (No.PD□□)	4
[0] [5]	[0] [1] to [F] [F]	Current values of parameters Reads the current values of the parameters in the parameter group specified with the command [8][5] + data No. [0][0]. Before reading the current values, therefore, always specify the parameter group with the command [8][5] + data No. [0][0]. The decimal equivalent of the data No. value (hexadecimal) corresponds to the parameter number.	8
[0] [6]	[0] [1] to [F] [F]	Upper limit values of parameter setting ranges Reads the permissible upper limit values of the parameters in the parameter group specified with the command [8][5] + data No. [0][0]. Before reading the upper limit values, therefore, always specify the parameter group with the command [8][5] + data No. [0][0]. The decimal equivalent of the data No. value (hexadecimal) corresponds to the parameter number.	8
[0] [7]	[0] [1] to [F] [F]	Lower limit values of parameter setting ranges Reads the permissible lower limit values of the parameters in the parameter group specified with the command [8][5] + data No. [0][0]. Before reading the lower limit values, therefore, always specify the parameter group with the command [8][5] + data No. [0][0]. The decimal equivalent of the data No. value (hexadecimal) corresponds to the parameter number.	8
[0] [8]	[0] [1] to [F] [F]	Abbreviations of parameters Reads the abbreviations of the parameters in the parameter group specified with the command [8][5] + data No. [0][0]. Before reading the abbreviations, therefore, always specify the parameter group with the command [8][5] + data No. [0][0]. The decimal equivalent of the data No. value (hexadecimal) corresponds to the parameter number.	12
[0] [9]	[0] [1] to [F] [F]	Write enable/disable of parameters Reads write enable/disable of the parameters in the parameter group specified with the command [8][5] + data No. [0][0]. Before reading write enable/disable, therefore, always specify the parameter group with the command [8][5] + data No. [0][0]. 0000: Write enabled 0001: Write disabled	4

(3) External I/O signals (Command [1][2])

Command	Data No.	Description	Frame length
[1] [2]	[0] [0]	Input device status	8
	[0] [1]		
	[4] [0]	External input pin status	
	[6] [0]	Status of input device turned ON by communication	
	[6] [1]		
	[8] [0]	Output device status	
	[8] [1]		
	[C] [0]	External output pin status	

(4) Alarm history (Command [3][3])

Command	Data No.	Description	Alarm occurrence sequence	Frame length
[3] [3]	[1] [0]	Alarm number in alarm history	most recent alarm	4
	[1] [1]		first alarm in past	
	[1] [2]		second alarm in past	
	[1] [3]		third alarm in past	
	[1] [4]		fourth alarm in past	
	[1] [5]		fifth alarm in past	
	[2] [0]	Alarm occurrence time in alarm history	most recent alarm	8
	[2] [1]		first alarm in past	
	[2] [2]		second alarm in past	
	[2] [3]		third alarm in past	
	[2] [4]		fourth alarm in past	
	[2] [5]		fifth alarm in past	

(5) Current alarm (Command [0][2], [3][5])

Command	Data No.	Description		Frame length
[0] [2]	[0][0]	Current alarm number		4
[3] [5]	[8][0]	Status display data value and processing information at alarm occurrence	Current position	12
	[8][1]		Command position	
	[8][2]		Command remaining distance	
	[8][3]		Point table No.	
	[8][4]		Cumulative feedback pulses	
	[8][5]		Servo motor speed	
	[8][6]		Droop pulses	
	[8][7]			
	[8][8]			
	[8][9]			
	[8][A]		Regenerative load ratio	
	[8][B]		Effective load ratio	
	[8][C]		Peak load ratio	
	[8][D]		Instantaneous torque	
	[8][E]		Position within one-revolution	
	[8][F]		ABS counter	
	[9][0]		Load inertia moment ratio	
	[9][1]		Bus voltage	

(6) Point table/position data (Command [4][0])

Command	Data No.	Description	Frame length
[4][0]	[0][1] to [F][F]	Position data read The decimal equivalent of the data No. value (hexadecimal) corresponds to the Point table No.	8

(7) Point table/speed data (Command [5][0])

Command	Data No.	Description	Frame length
[5][0]	[0][1] to [F][F]	Speed data read The decimal equivalent of the data No. value (hexadecimal) corresponds to the Point table No.	8

(8) Point table/acceleration time constant (Command [5][4])

Command	Data No.	Description	Frame length
[5][4]	[0][1] to [F][F]	Acceleration time constant read The decimal equivalent of the data No. value (hexadecimal) corresponds to the Point table No.	8

(9) Point table/deceleration time constant (Command [5][8])

Command	Data No.	Description	Frame length
[5][8]	[0][1] to [F][F]	Deceleration time constant read The decimal equivalent of the data No. value (hexadecimal) corresponds to the Point table No.	8

(10) Point table/dwell (Command [6][0])

Command	Data No.	Description	Frame length
[6][0]	[0][1] to [F][F]	Dwell read The decimal equivalent of the data No. value (hexadecimal) corresponds to the Point table No.	8

(11) Point table/auxiliary function (Command [6][4])

Command	Data No.	Description	Frame length
[6][4]	[0][1] to [F][F]	Auxiliary function read The decimal equivalent of the data No. value (hexadecimal) corresponds to the Point table No.	8

(12) Group setting (Command [1][F])

Command	Data No.	Description	Frame length
[1][F]	[0][0]	Reading of group setting value	4

(13) Test operation mode (Command [0][0])

Command	Data No.	Description	Frame length
[0] [0]	[1] [2]	Test operation mode read 0000: Normal mode (not test operation mode) 0001: JOG operation 0002: Positioning operation 0003: Motorless operation 0004: Output signal (DO) forced output 0005: Single-step feed	4

(14) Others

Command	Data No.	Description	Frame length
[0] [2]	[9] [0]	Servo motor-side pulse unit absolute position	8
	[9] [1]	Command unit absolute position	8
	[7] [0]	Software version	16

15.4.2 Write commands

(1) Status display (Command [8][1])

Command	Data No.	Description	Setting range	Frame length
[8] [1]	[0] [0]	Status display data erasure	1EA5	4

(2) Parameters (Command [8][4] ･ [8][5])

Command	Data No.	Description	Setting range	Frame length
[8] [4]	[0][1] to [F][F]	Write of parameters Writes the values of the parameters in the parameter group specified with the command [8][5] + data No. [0][0]. Before writing the values, therefore, always specify the parameter group with the command [8][5] + data No. [0][0]. The decimal equivalent of the data No. value (hexadecimal) corresponds to the parameter number.	Depending on the parameter	8
[8] [5]	[0] [0]	Parameter group write 0000: Basic setting parameter (No.PA□□) 0001: Gain filter parameter (No.PB□□) 0002: Extension setting parameter (No.PC□□) 0003: I/O setting parameter (No.PD□□)	0000 to 0003	4

(3) External I/O signal (Command [9][2])

Command	Data No.	Description	Setting range	Frame length
[9] [2]	[6] [0]	Communication input device signal	Refer to section 15.5.5	8
	[6] [1]			

(4) Alarm history (Command [8][2])

Command	Data No.	Description	Setting range	Frame length
[8] [2]	[2] [0]	Alarm history erasure	1EA5	4

(5) Current alarm (Command [8][2])

Command	Data No.	Description	Setting range	Frame length
[8] [2]	[0] [0]	Alarm erasure	1EA5	4

(6) Point table/position data (Command [C][0])

Command	Data No.	Description	Setting range	Frame length
[C][0]	[0][1] to [F][F]	Position data write The decimal equivalent of the data No. value (hexadecimal) corresponds to the Point table No.	−999999 to 999999	8

(7) Point table/speed data (Command [C][6])

Command	Data No.	Description	Setting range	Frame length
[C][6]	[0][1] to [F][F]	Speed data write The decimal equivalent of the data No. value (hexadecimal) corresponds to the Point table No.	0 to Permissible instantaneous speed	8

(8) Point table/acceleration time constant (Command [C][7])

Command	Data No.	Description	Setting range	Frame length
[C][7]	[0][1] to [F][F]	Acceleration time constant write The decimal equivalent of the data No. value (hexadecimal) corresponds to the Point table No.	0 to 20000	8

(9) Point table/deceleration time constant (Command [C][8])

Command	Data No.	Description	Setting range	Frame length
[C][8]	[0][1] to [F][F]	Deceleration time constant write The decimal equivalent of the data No. value (hexadecimal) corresponds to the Point table No.	0 to 20000	8

(10) Point table/dwell (Command [C][A])

Command	Data No.	Description	Setting range	Frame length
[C][A]	[0][1] to [F][F]	Dwell write The decimal equivalent of the data No. value (hexadecimal) corresponds to the Point table No.	0 to 20000	8

(11) Point table/auxiliary function (Command [C][B])

Command	Data No.	Description	Setting range	Frame length
[C][B]	[0][1] to [F][F]	Auxiliary function write The decimal equivalent of the data No. value (hexadecimal) corresponds to the Point table No.	0 to 3	8

(12) External input signal disable (Command [9][0])

Command	Data No.	Description	Setting range	Frame length
[9][0]	[0][0]	Turns off the input devices with the exception of EMG, LSP and LSN, independently of the external ON/OFF statuses.	1EA5	4
	[0][3]	Disables all output devices (DO).	1EA5	4
	[1][0]	Enables the disabled input devices with the exception of EMG, LSP and LSN.	1EA5	4
	[1][3]	Enables the disabled output devices (DO).	1EA5	4

(13) Operation mode selection (Command [8][B])

Command	Data No.	Description	Setting range	Frame length
[8] [B]	[0] [0]	Operation mode switching 0000: Test operation mode cancel 0001: JOG operation 0002: Positioning operation 0003: Motorless operation 0004: Output signal (DO) forced output 0005: Single-step feed	0000 to 0005	4

(14) Test operation mode data (Command [9][2] ･ [A][0])

Command	Data No.	Description	Setting range	Frame length
[9] [2]	[0] [0]	Input signal for test operation	Refer to section 15.5.7.	8
	[0] [1]			
	[A] [0]	Forced output of signal pin	Refer to section 15.5.9.	8
[A] [0]	[1] [0]	Writes the speed in the test operation mode (JOG operation, positioning operation).	0000 to 7FFF	4
	[1] [1]	Writes the acceleration/deceleration time constant in the test operation mode (JOG operation, positioning operation).	00000000 to 7FFFFFFF	8
	[2] [0]	Sets the travel distance in the test operation mode (JOG operation, positioning operation).	00000000 to 7FFFFFFF	8
	[2] [1]	Selects the positioning direction of test operation (positioning operation). 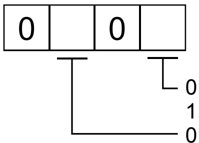 0: Forward rotation direction 1: Reverse rotation direction 0: Command pulse unit 1: Encoder pulse unit	0000 to 0001	4
	[4] [0]	Test operation (positioning operation) start command.	1EA5	4
	[4] [1]	Used to make a temporary stop during test operation (positioning operation). □in the data indicates a blank. STOP: Temporary stop G0□□: Restart for remaining distance CLR□: Remaining distance clear.	STOP G0□□ CLR□	4

(15) Group setting (Command [9][F])

Command	Data No.	Description	Setting range	Frame length
[9] [F]	[0] [0]	Setting of group	a to f	4

15.5 Detailed explanations of commands

15.5.1 Data processing

When the master station transmits a command + data No. or a command + data No. + data to a slave station, the servo amplifier returns a reply or data according to the purpose.
When numerical values are represented in these send data and receive data, they are represented in decimal, hexadecimal, etc.
Therefore, data must be processed according to the application.
Since whether data must be processed or not and how to process data depend on the monitoring, parameters, etc., follow the detailed explanation of the corresponding command.
The following methods are how to process send and receive data when reading and writing data.

(1) Processing the read data
When the display type is 0, the eight-character data is converted from hexadecimal to decimal and a decimal point is placed according to the decimal point position information.
When the display type is 1, the eight-character data is used unchanged.

The following example indicates how to process the receive data "003000000929" given to show.
The receive data is as follows.

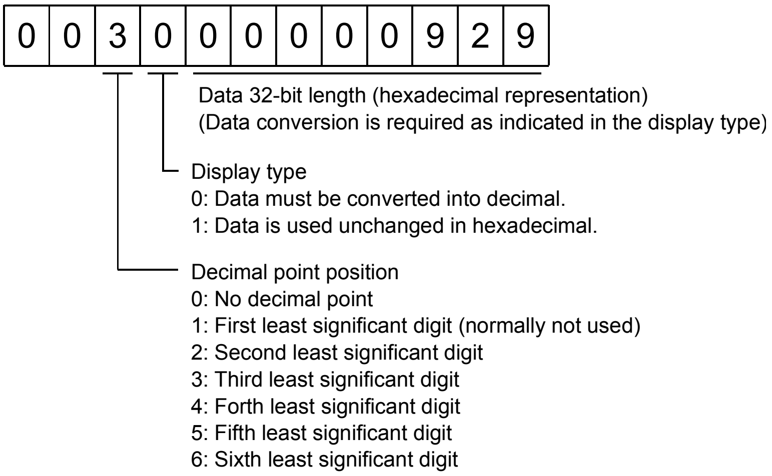

Data 32-bit length (hexadecimal representation)
(Data conversion is required as indicated in the display type)

Display type
0: Data must be converted into decimal.
1: Data is used unchanged in hexadecimal.

Decimal point position
0: No decimal point
1: First least significant digit (normally not used)
2: Second least significant digit
3: Third least significant digit
4: Forth least significant digit
5: Fifth least significant digit
6: Sixth least significant digit

Since the display type is "0" in this case, the hexadecimal data is converted into decimal.
00000929H→2345
As the decimal point position is "3", a decimal point is placed in the third least significant digit.
Hence, "23.45" is displayed.

(2) Writing the processed data

When the data to be written is handled as decimal, the decimal point position must be specified. If it is not specified, the data cannot be written. When the data is handled as hexadecimal, specify "0" as the decimal point position.

The data to be sent is the following value.

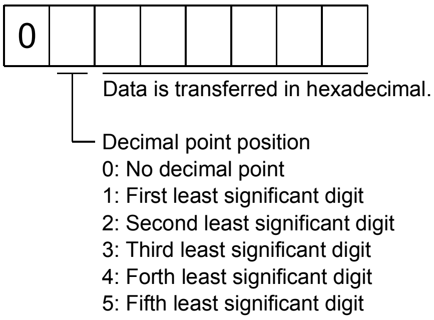

By way of example, here is described how to process the set data when a value of "15.5" is sent.

Since the decimal point position is the second digit, the decimal point position data is "2".

As the data to be sent is hexadecimal, the decimal data is converted into hexadecimal.

155→9B

Hence, "0200009B" is transmitted.

15.5.2 Status display

(1) Reading the status display name and unit

Read the status display name and unit.

(a) Transmission

Transmit command [0][1] and the data No. corresponding to the status display item to be read, [0][0] to [0][E]. (Refer to section 15.4.1.)

(b) Reply

The slave station sends back the status display name and unit requested.

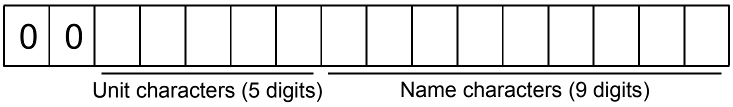

(2) Status display data read

Read the status display data and processing information.

(a) Transmission

Transmit command [0][1] and the data No. corresponding to the status display item to be read. Refer to section 15.4.1.

(b) Reply

The slave station sends back the status display data requested.

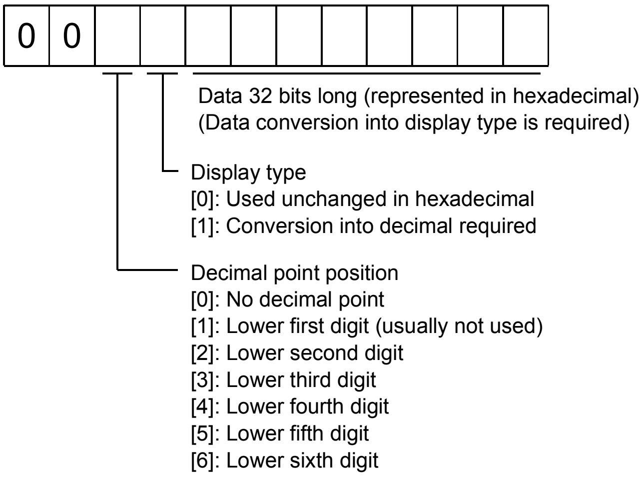

(3) Status display data clear

The cumulative feedback pulse data of the status display is cleared. Send this command immediately after reading the status display item. The data of the status display item transmitted is cleared to zero.

Command	Data No.	Data
[8][1]	[0][0]	[1][E][A][5]

For example, after sending command [0][1] and data No. [8][0] and receiving the status display data, send command [8][1], data No. [0][0] and data [1EA5] to clear the cumulative feedback pulse value to zero.

15.5.3 Parameters

(1) Specify the parameter group

The group of the parameters to be operated must be specified in advance to read or write the parameter settings, etc. Write data to the servo amplifier as described below to specify the parameter group to be operated.

Command	Data No.	Transmission data	Parameter group
[8] [5]	[0] [0]	0000	Basic setting parameter (No.PA□□)
		0001	Gain filter parameter (No.PB□□)
		0002	Extension setting parameter (No.PC□□)
		0003	I/O setting parameter (No.PD□□)

(2) Reading the parameter group

Read the parameter group.

(a) Transmission

Send command [0][4] and data No.[0][1].

Command	Data No.
[0] [4]	[0] [1]

(b) Reply

The slave station sends back the preset parameter group.

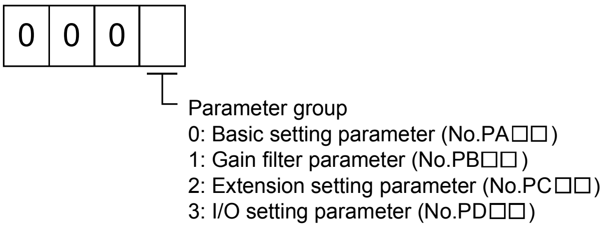

(3) Reading the symbol

Read the parameter name. Specify the parameter group in advance (refer to (1) in this section).

(a) Transmission

Transmit command [0][8] and the data No. corresponding to the parameter No., [0][1] to [F][F]. (Refer to section 15.4.1.)

The data No. is expressed in hexadecimal. The decimal equivalent of the data No. value corresponds to the parameter number.

(b) Reply

The slave station sends back the name of the parameter No. requested.

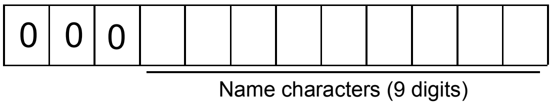

(4) Reading the setting

Read the parameter setting. Specify the parameter group in advance (refer to (1) in this section).

(a) Transmission

Transmit command [0][5] and the data No. corresponding to the parameter No., [0][1] to [F][F]. (Refer to section 15.4.1.)

The data No. is expressed in hexadecimal. The decimal equivalent of the data No. value corresponds to the parameter number.

(b) Reply

The slave station sends back the data and processing information of the parameter No. requested.

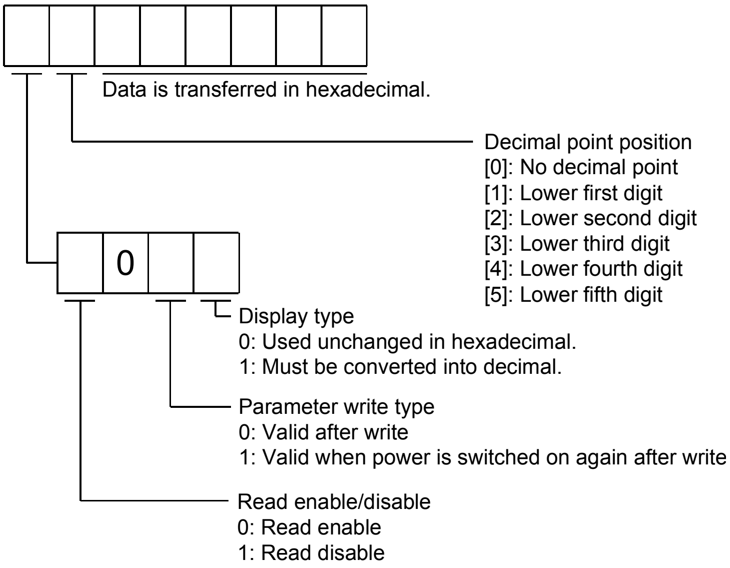

For example, data "1200270F" means 999.9 (decimal display format) and data "0003ABC" means 3ABC (hexadecimal display format).

When the display type is "0" (hexadecimal) and the decimal point position is other than 0, the display type is a special hexadecimal display format and "F" of the data value is handled as a blank. Data "01FFF053" means 053 (special hexadecimal display format).

"1 (Read disable)" is transferred to the "Read enable/disable" section and "000000" is transferred to the data section when the parameter that was read is the one inaccessible for write/reference in the parameter write disable setting of parameter No.PA19.

(5) Reading the setting range

Read the parameter setting range. Specify the parameter group in advance (refer to (1) in this section).

(a) Transmission

When reading the upper limit value, transmit command [0][6] and the data No. corresponding to the parameter No., [0][0] to [F][F]. When reading the lower limit value, transmit command [0][7] and the data No. corresponding to the parameter No., [0][0] to [F][F]. (Refer to section 15.4.1.)

The data No. is expressed in hexadecimal. The decimal equivalent of the data No. value corresponds to the parameter number.

(b) Reply

The slave station sends back the data and processing information of the parameter No. requested.

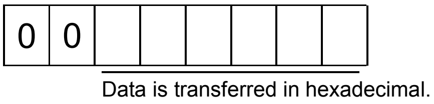

For example, data "10FFFFEC" means -20.

(6) Parameter write

POINT

- If setting values need to be changed with a high frequency (i.e. one time or more per one hour), write the setting values to the RAM, not the EEP-ROM. The EEP-ROM has a limitation in the number of write times and exceeding this limitation causes the servo amplifier to malfunction. Note that the number of write times to the EEP-ROM is limited to approximately 100, 000.

Write the parameter setting into EEP-ROM of the servo amplifier. Specify the parameter group in advance (refer to (1) in this section).
Write the value within the setting enabled range. For the setting enabled range, refer to chapter 6 or read the setting range by performing operation in (3) in this section.
Transmit command [8][4], the data No., and the set data.
The data No. is expressed in hexadecimal. The decimal equivalent of the data No. value corresponds to the parameter number.
When the data to be written is handled as decimal, the decimal point position must be specified. If it is not specified, data cannot be written. When the data is handled as hexadecimal, specify 0 as the decimal point position.
Write the data after making sure that it is within the upper/lower limit value range.
Read the parameter data to be written, confirm the decimal point position, and create transmission data to prevent error occurrence. On completion of write, read the same parameter data to verify that data has been written correctly.

Command	Data No.	Set data
[8][4]	[0][1] to [F][F]	See below.

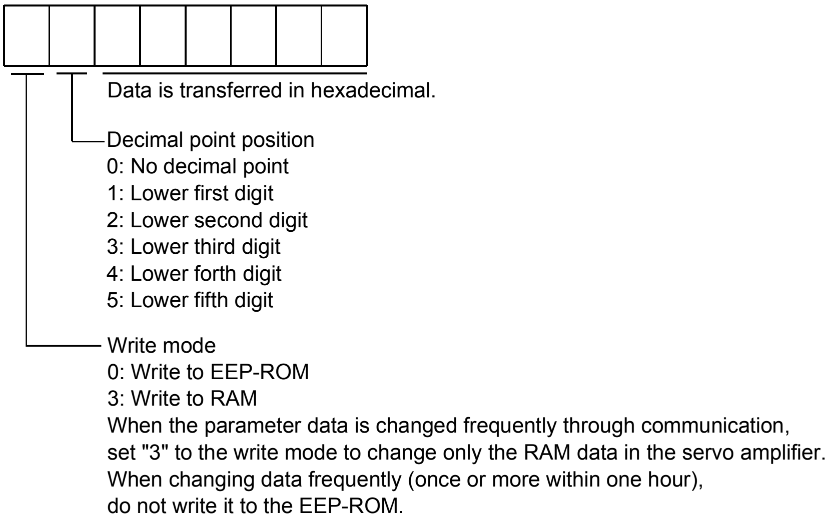

Data is transferred in hexadecimal.

Decimal point position
0: No decimal point
1: Lower first digit
2: Lower second digit
3: Lower third digit
4: Lower forth digit
5: Lower fifth digit

Write mode
0: Write to EEP-ROM
3: Write to RAM
When the parameter data is changed frequently through communication,
set "3" to the write mode to change only the RAM data in the servo amplifier.
When changing data frequently (once or more within one hour),
do not write it to the EEP-ROM.

15.5.4 External I/O signal statuses (DIO diagnosis)

(1) Reading of input device statuses

Read the statuses of the input devices.

(a) Transmission

Transmit command [1][2] and the data No. corresponding to the input device.

Command	Data No.
[1][2]	[0][0]
	[0][1]

(b) Reply

The slave station sends back the statuses of the input pins.

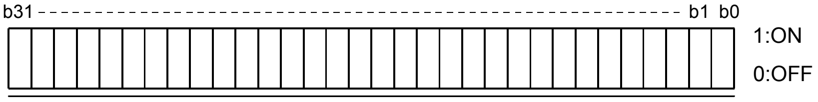

Command of each bit is transmitted to the master station as hexadecimal data.

bit	Data No. [0][0]		Data No. [0][1]	
	Device name	Symbol	Device name	Symbol
0	Servo-on	SON		
1	Forward rotation stroke end	LSP		
2	Reverse rotation stroke end	LSN		
3				
4	Internal torque limit selection	TL1		
5	Proportion control	PC		
6	Reset	RES		
7	Clear	CR		
8				
9				
10				
11	Forward rotation start	ST1		
12	Reverse rotation start	ST2		
13				
14				
15				
16				
17	Automatic/manual selection	MD0		
18	Proximity dog	DOG		
19				
20				
21				
22				
23	Override selection	OVR		
24	Temporary stop/Restart	TSTP	Point table No. selection 1	DI0
25			Point table No. selection 2	DI1
26			Point table No. selection 3	DI2
27	Gain switching	CDP	Point table No. selection 4	DI3
28			Point table No. selection 5	DI4
29			Point table No. selection 6	DI5
30			Point table No. selection 7	DI6
31			Point table No. selection 8	DI7

(2) External input pin status read

Read the ON/OFF statuses of the external output pins.

(a) Transmission

Transmit command [1][2] and data No. [4][0].

Command	Data No.
[1][2]	[4][0]

(b) Reply

The ON/OFF statuses of the input pins are sent back.

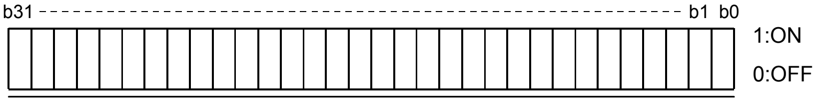

Command of each bit is transmitted to the master station as hexadecimal data.

bit	CN6 connector pin
0	1
1	2
2	3
3	4
4	
5	
6	
7	

bit	CN6 connector pin
8	
9	
10	
11	
12	
13	
14	
15	

bit	CN6 connector pin
16	
17	
18	
19	
20	
21	
22	
23	

bit	CN6 connector pin
24	
25	
26	
27	
28	
29	
30	
31	

(3) Read of the statuses of input devices switched on through communication

Read the ON/OFF statuses of the input devices switched on through communication.

(a) Transmission

Transmit command [1][2] and the data No. corresponding to the input device.

Command	Data No.
[1][2]	[6][0]
	[6][1]

(b) Reply

The slave station sends back the statuses of the input pins.

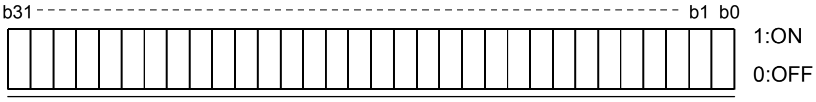

Command of each bit is transmitted to the master station as hexadecimal data.

bit	Data No. [6][0]		Data No. [6][1]	
	Device name	Symbol	Device name	Symbol
0	Servo-on	SON		
1	Forward rotation stroke end	LSP		
2	Reverse rotation stroke end	LSN		
3				
4	Internal torque limit selection	TL1		
5	Proportion control	PC		
6	Reset	RES		
7	Clear	CR		
8				
9				
10				
11	Forward rotation start	ST1		
12	Reverse rotation start	ST2		
13				
14				
15				
16				
17	Automatic/manual selection	MD0		
18	Proximity dog	DOG		
19				
20				
21				
22				
23				
24	Temporary stop/Restart	TSTP	Point table No. selection 1	DI0
25			Point table No. selection 2	DI1
26			Point table No. selection 3	DI2
27	Gain switching	CDP	Point table No. selection 4	DI3
28			Point table No. selection 5	DI4
29			Point table No. selection 6	DI5
30			Point table No. selection 7	DI6
31			Point table No. selection 8	DI7

(4) External output pin status read

Read the ON/OFF statuses of the external output pins.

(a) Transmission

Transmit command [1][2] and data No. [C][0].

Command	Data No.
[1][2]	[C][0]

(b) Reply

The slave station sends back the ON/OFF statuses of the output pins.

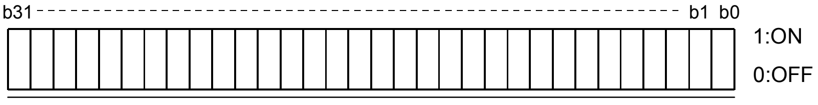

Command of each bit is transmitted to the master station as hexadecimal data.

bit	CN6 connector pin
0	14
1	15
2	16
3	
4	
5	
6	
7	

bit	CN6 connector pin
8	
9	
10	
11	
12	
13	
14	
15	

bit	CN6 connector pin
16	
17	
18	
19	
20	
21	
22	
23	

bit	CN6 connector pin
24	
25	
26	
27	
28	
29	
30	
31	

(5) Read of the statuses of output devices

Read the ON/OFF statuses of the output devices.

(a) Transmission

Transmit command [1][2] and the data No. corresponding to the output device.

Command	Data No.
[1][2]	[8][0]
	[8][1]

(b) Reply

The slave station sends back the statuses of the output devices.

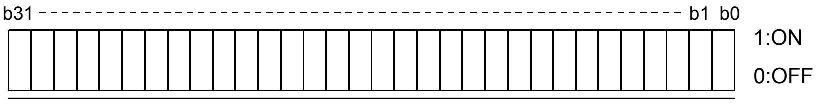

Command of each bit is transmitted to the master station as hexadecimal data.

bit	Data No. [8][0]		Data No. [8][1]	
	Device name	Symbol	Device name	Symbol
0	Ready	RD		
1				
2	Zero speed	ZSP		
3	Limiting torque	TLC		
4				
5	In position	INP		
6				
7	Warning	WNG		
8	Malfunction	ALM		
9				
10	Electromagnetic brake interlock	MBR		
11	dynamic brake interlock	DB		
12				
13				
14				
15	Battery warning	BWNG		
16	Rough match	CPO		
17	Home position return completion	ZP		
18	Position range output	POT		
19	Temporary stop	PUS		
20				
21				
22				
23				
24			Point table No. output 1	PT0
25	Variable gain selection	CDPS	Point table No. output 2	PT1
26			Point table No. output 3	PT2
27			Point table No. output 4	PT3
28	Movement completion	MEND	Point table No. output 5	PT4
29			Point table No. output 6	PT5
30			Point table No. output 7	PT6
31			Point table No. output 8	PT7

15.5.5 Device ON/OFF

POINT

- The ON/OFF states of all devices in the servo amplifier are the states of the data received last. Hence, when there is a device which must be kept ON, send data which turns that device ON every time.

Each input device can be switched on/off. However, when the device to be switched off exists in the external input signal, also switch off that input signal.

Send command [9][2], data No. corresponding to the input device and data.

Command	Data No.	Set data
[9][2]	[6][0]	See below.
	[6][1]	

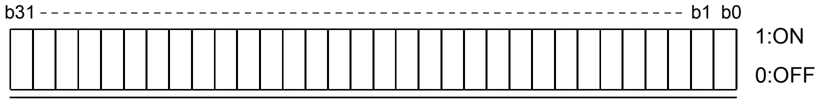

Command of each bit is transmitted to the slave station as hexadecimal data.

bit	Data No. [6][0]		Data No. [6][1]	
	Device name	Symbol	Device name	Symbol
0	Servo-on	SON		
1	Forward rotation stroke end	LSP		
2	Reverse rotation stroke end	LSN		
3				
4	Internal torque limit selection	TL1		
5	Proportion control	PC		
6	Reset	RES		
7	Clear	CR		
8				
9				
10				
11	Forward rotation start	ST1		
12	Reverse rotation start	ST2		
13				
14				
15				
16				
17	Automatic/manual selection	MD0		
18	Proximity dog	DOG		
19				
20				
21				
22				
23				
24	Temporary stop/Restart	TSTP	Point table No. selection 1	DI0
25			Point table No. selection 2	DI1
26			Point table No. selection 3	DI2
27	Gain switching	CDP	Point table No. selection 4	DI3
28			Point table No. selection 5	DI4
29			Point table No. selection 6	DI5
30			Point table No. selection 7	DI6
31			Point table No. selection 8	DI7

15.5.6 Disable/enable of I/O devices (DIO)

Inputs can be disabled independently of the I/O devices ON/OFF. When inputs are disabled, the input signals (devices) are recognized as follows. Among the input devices, EMG, LSP and LSN cannot be disabled.

Signal	Status
Input devices (DI)	OFF

(1) Disabling/enabling the input devices (DI) with the exception of EMG, LSP and LSN.
Transmit the following communication commands.

(a) Disable

Command	Data No.	Data
[9][0]	[0][0]	1EA5

(b) Enable

Command	Data No.	Data
[9][0]	[1][0]	1EA5

(2) Disabling/enabling the output devices (DO)
Transmit the following communication commands.

(a) Disable

Command	Data No.	Data
[9][0]	[0][3]	1EA5

(b) Enable

Command	Data No.	Data
[9][0]	[1][3]	1EA5

15.5.7 Input devices ON/OFF (test operation)

Each input devices can be turned on/off for test operation. When the device to be switched off exists in the external input signal, also switch off that input signal.

Send command [9] [2], data No. corresponding to the input device and data.

Command	Data No.	Set data
[9][2]	[0][0]	See below
	[0][1]	

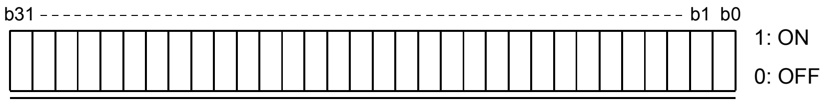

Command of each bit is transmitted to the slave station as hexadecimal data.

bit	Data No. [0][0]		Data No. [0][1]	
	Device name	Symbol	Device name	Symbol
0	Servo-on	SON		
1	Forward rotation stroke end	LSP		
2	Reverse rotation stroke end	LSN		
3				
4	Internal torque limit selection	TL1		
5	Proportion control	PC		
6	Reset	RES		
7	Clear	CR		
8				
9				
10				
11	Forward rotation start	ST1		
12	Reverse rotation start	ST2		
13				
14				
15				
16				
17	Automatic/manual selection	MD0		
18	Proximity dog	DOG		
19				
20				
21				
22				
23				
24	Temporary stop/Restart	TSTP	Point table No. selection 1	DI0
25			Point table No. selection 2	DI1
26			Point table No. selection 3	DI2
27	Gain switching	CDP	Point table No. selection 4	DI3
28			Point table No. selection 5	DI4
29			Point table No. selection 6	DI5
30			Point table No. selection 7	DI6
31			Point table No. selection 8	DI7

15.5.8 Test operation mode

POINT

- The test operation mode is used to confirm operation. Do not use it for actual operation.
- If communication stops for longer than 0.5s during test operation, the servo amplifier decelerates to a stop, resulting in servo lock. To prevent this, continue communication all the time, e.g. monitor the status display.
- Even during operation, the servo amplifier can be put in the test operation mode.
- In this case, as soon as the test operation mode is selected, the base circuit is shut off, coasting the servo amplifier.

(1) Preparation and cancel of test operation mode

(a) Preparation of test operation mode

Set the test operation mode type in the following procedure.

Send the command [8][B] + data No. [0][0] to select the test operation mode.

Command	Data No.	Transmission Data	Test Operation Mode Selection
[8][B]	[0][0]	0001	JOG operation
		0002	Positioning operation
		0003	Motorless operation
		0004	DO forced output
		0005	Single-step feed

2) Confirmation of test operation mode

Read the test operation mode set for the slave station, and confirm that it is set correctly.

a. Transmission

Send the command [0][0] + data No. [1][2].

Command	Data No.
[0][0]	[1][2]

b. Reply

The slave station returns the set test operation mode.

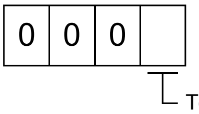

Test operation mode read
0: Normal mode (not test operation mode)
1: JOG operation
2: Positioning operation
3: Motorless operation
4: DO forced output
5: Single-step feed

(2) JOG operation

Send the command, data No. and data as indicated below to execute JOG operation.

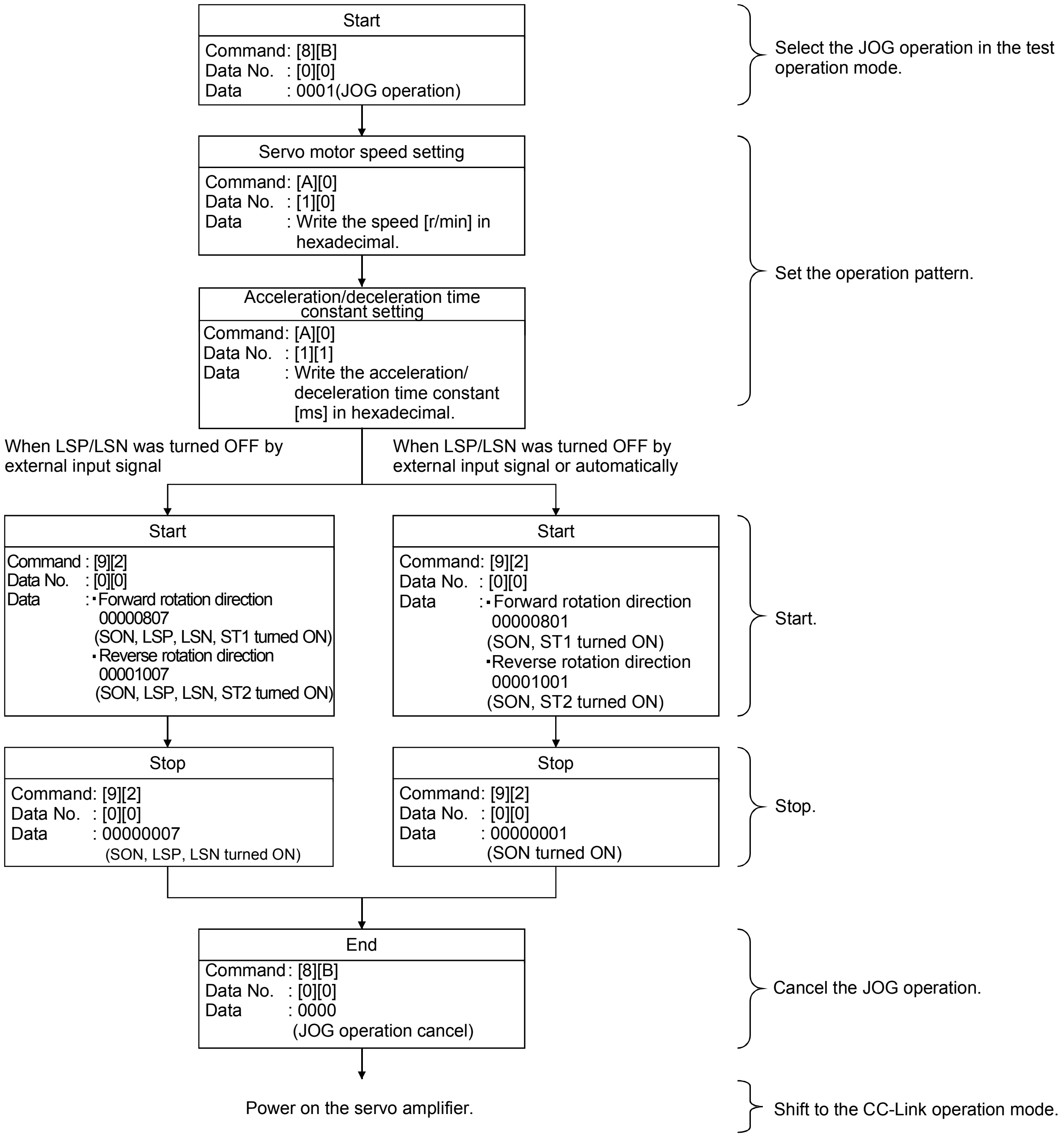

(3) Positioning operation

(a) Operation procedure

Send the command, data No. and data as indicated below to execute positioning operation.

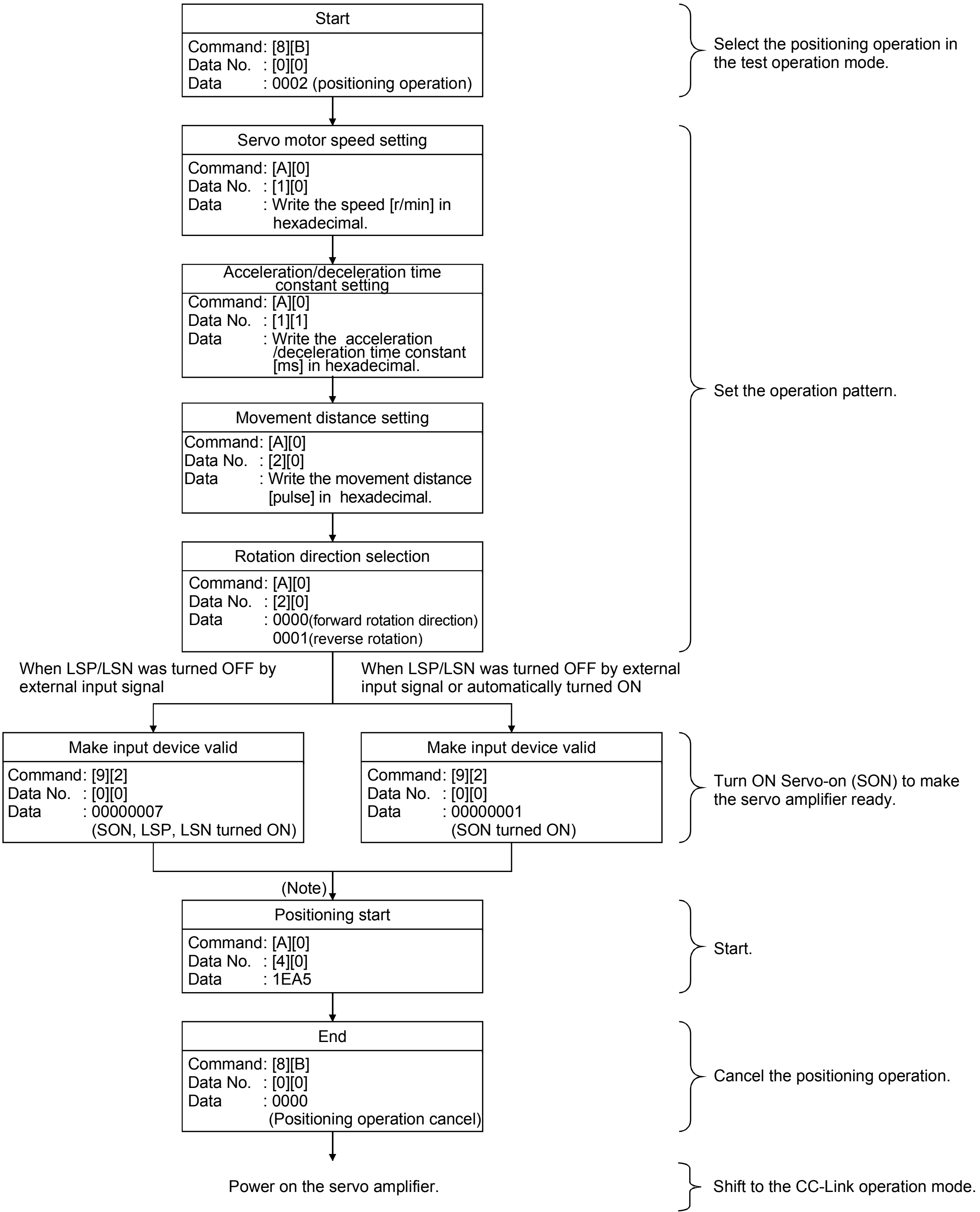

Start
Command: [8][B]
Data No. : [0][0]
Data : 0002 (positioning operation)

Select the positioning operation in the test operation mode.

Servo motor speed setting
Command: [A][0]
Data No. : [1][0]
Data : Write the speed [r/min] in hexadecimal.

Acceleration/deceleration time constant setting
Command: [A][0]
Data No. : [1][1]
Data : Write the acceleration /deceleration time constant [ms] in hexadecimal.

Movement distance setting
Command: [A][0]
Data No. : [2][0]
Data : Write the movement distance [pulse] in hexadecimal.

Rotation direction selection
Command: [A][0]
Data No. : [2][0]
Data : 0000(forward rotation direction)
0001(reverse rotation)

Set the operation pattern.

When LSP/LSN was turned OFF by external input signal

Make input device valid
Command: [9][2]
Data No. : [0][0]
Data : 00000007
(SON, LSP, LSN turned ON)

When LSP/LSN was turned OFF by external input signal or automatically turned ON

Make input device valid
Command: [9][2]
Data No. : [0][0]
Data : 00000001
(SON turned ON)

Turn ON Servo-on (SON) to make the servo amplifier ready.

(Note)

Positioning start
Command: [A][0]
Data No. : [4][0]
Data : 1EA5

Start.

End
Command: [8][B]
Data No. : [0][0]
Data : 0000
(Positioning operation cancel)

Cancel the positioning operation.

Power on the servo amplifier.

Shift to the CC-Link operation mode.

Note. There is a 100ms delay.

(b) Temporary stop/restart/remaining distance clear

Send the following command, data No. and data during positioning operation to make deceleration to a stop.

Command	Data No.	Data
[A][0]	[4][1]	STOP

Send the following command, data No. and data during a temporary stop to make a restart.

Command	Data No.	(Note) Data
[A][0]	[4][1]	GO□□

Note. □ indicates a blank.

Send the following command, data No. and data during a temporary stop to stop positioning operation and erase the remaining movement distance.

Command	Data No.	(Note) Data
[A][0]	[4][1]	CLR□

Note. □ indicates a blank.

(4) Single-step feed

Set necessary items to the point table before starting the single-step feed.

Send the command, data No. and data as indicated below to execute single-step feed.

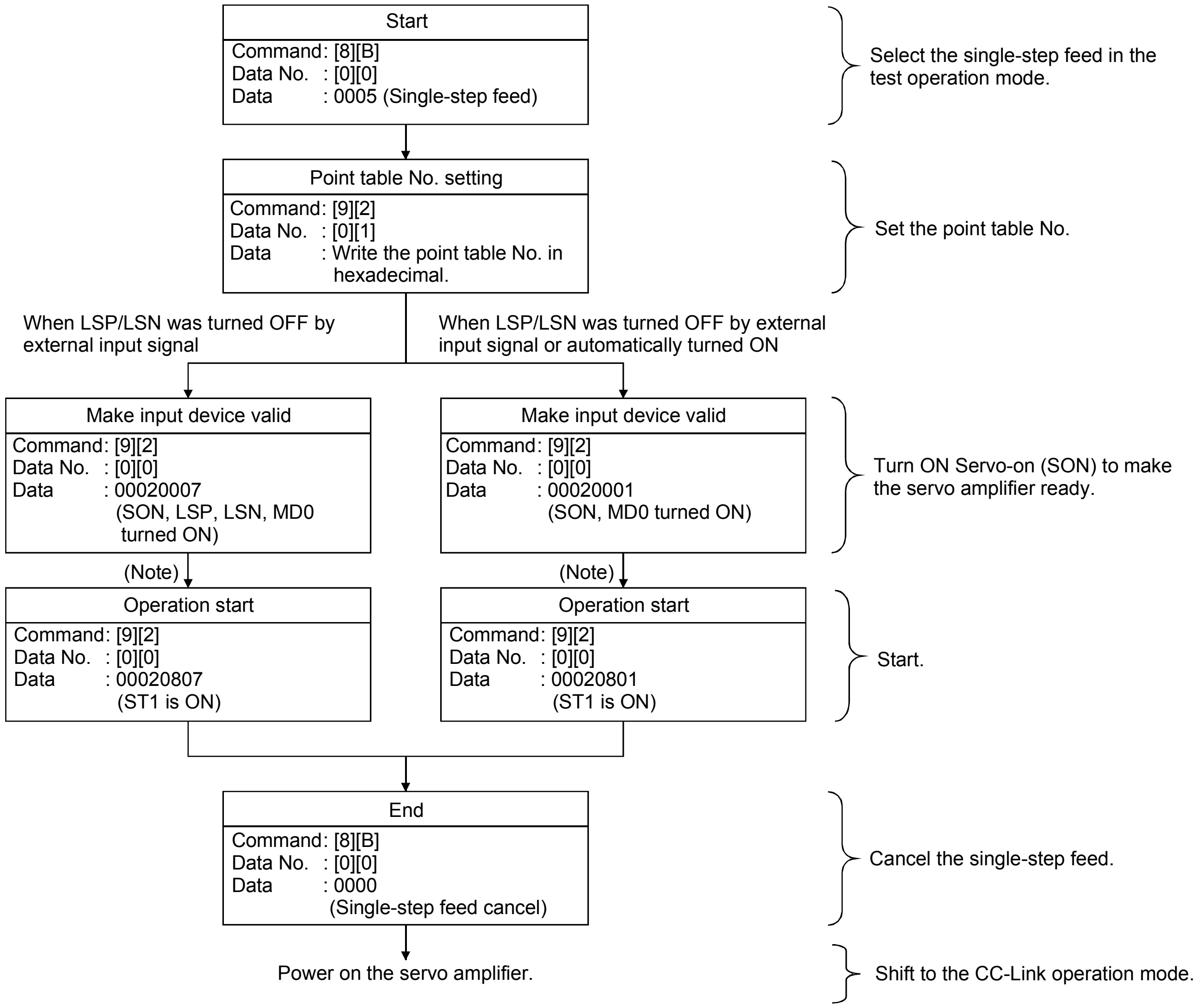

Start
Command: [8][B]
Data No. : [0][0]
Data : 0005 (Single-step feed)

Select the single-step feed in the test operation mode.

Point table No. setting
Command: [9][2]
Data No. : [0][1]
Data : Write the point table No. in hexadecimal.

Set the point table No.

When LSP/LSN was turned OFF by external input signal

Make input device valid
Command: [9][2]
Data No. : [0][0]
Data : 00020007
(SON, LSP, LSN, MD0 turned ON)

(Note)

Operation start
Command: [9][2]
Data No. : [0][0]
Data : 00020807
(ST1 is ON)

When LSP/LSN was turned OFF by external input signal or automatically turned ON

Make input device valid
Command: [9][2]
Data No. : [0][0]
Data : 00020001
(SON, MD0 turned ON)

(Note)

Operation start
Command: [9][2]
Data No. : [0][0]
Data : 00020801
(ST1 is ON)

Turn ON Servo-on (SON) to make the servo amplifier ready.

Start.

End
Command: [8][B]
Data No. : [0][0]
Data : 0000
(Single-step feed cancel)

Cancel the single-step feed.

Power on the servo amplifier.

Shift to the CC-Link operation mode.

Note. Start operation after home position return completion (ZP) is confirmed. Refer to 17th bit of the data read with command [1][2] and data No.[8][0].

(5) Output signal pin ON/OFF output signal (DO) forced output

In the test operation mode, the output signal pins can be turned on/off independently of the servo status. Using command [9][0], disable the output signals in advance.

(a) Choosing DO forced output in test operation mode

Transmit command [8][B] + data No. [0][0] + data "0004" to choose DO forced output.

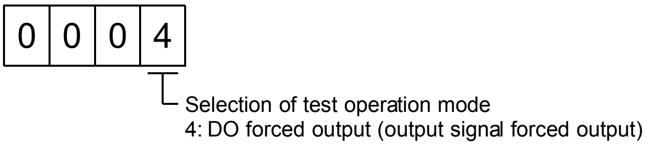

(b) External output signal ON/OFF

Transmit the following communication commands.

Command	Data No.	Setting data
[9][2]	[A][0]	See below.

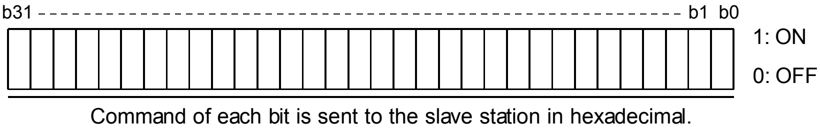

bit	CN6 connector pin	bit	CN6 connector pin	bit	CN6 connector pin	bit	CN6 connector pin
0	14	8		16		24	
1	15	9		17		25	
2	16	10		18		26	
3		11		19		27	
4		12		20		28	
5		13		21		29	
6		14		22		30	
7		15		23		31	

(c) Canceling DO forced output

Transmit command [8][B] + data No. [0][0] + data to cancel DO forced output.

Command	Data No.	Transmission data	Description
[8][B]	[0][0]	0000	Cancel DO forced output

(6) Motorless operation

(a) Performing motorless operation

Transmit command [8][B] + data No. [0][0] + data "0003" to perform motorless operation.

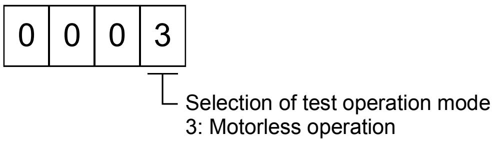

To perform operation after performing the motorless operation, issue a command from the controller.

(b) Canceling motorless operation

The motorless operation cannot be canceled in the same way as the test operation mode (transmit command [8][B] + data No. [0][0] + data "0000"). To cancel the motorless operation, power on the servo amplifier and shift to the CC-Link operation mode beforehand.

15.5.9 Alarm history

(1) Alarm No. read

Read the alarm No. which occurred in the past. The alarm numbers and occurrence times of No. 0 (last alarm) to No. 5 (sixth alarm in the past) are read.

(a) Transmission

Send command [3][3] and data No. [1][0] to [1][5]. Refer to section 15.4.1.

(b) Reply

The alarm No. corresponding to the data No. is provided.

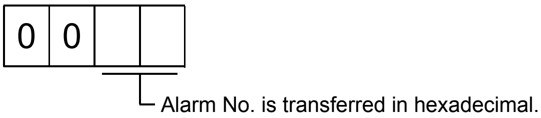

For example, "0032" means A32 and "00FF" means A_ _ (no alarm).

(2) Alarm occurrence time read

Read the occurrence time of alarm which occurred in the past.

The alarm occurrence time corresponding to the data No. is provided in terms of the total time beginning with operation start, with the minute unit omitted.

(a) Transmission

Send command [3][3] and data No. [2][0] to [2][5].

Refer to section 15.4.1.

(b) Reply

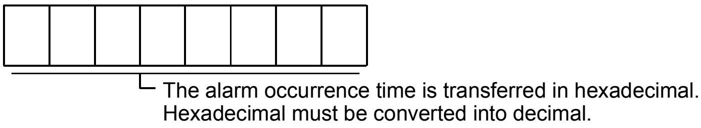

For example, data "01F5" means that the alarm occurred in 501 hours after start of operation.

(3) Alarm history clear

Erase the alarm history.

Send command [8][2] and data No. [2][0].

Command	Data No.	Data
[8][2]	[2][0]	1EA5

15.5.10 Current alarm

(1) Current alarm read

Read the alarm No. which is occurring currently.

(a) Transmission

Send command [0][2] and data No. [0][0].

Command	Data No.
[0][2]	[0][0]

(b) Reply

The slave station sends back the alarm currently occurring.

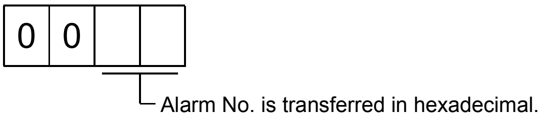

For example, "0032" means A32 and "00FF" means A_ _ (no alarm).

(2) Read of the status display at alarm occurrence

Read the status display data at alarm occurrence. When the data No. corresponding to the status display item is transmitted, the data value and data processing information are sent back.

(a) Transmission

Send command [3][5] and any of data No. [8][0] to [8][E] corresponding to the status display item to be read. Refer to section 15.4.1.

(b) Reply

The slave station sends back the requested status display data at alarm occurrence.

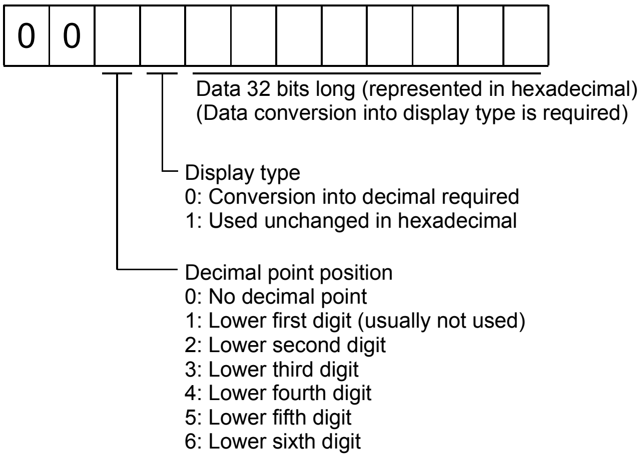

(3) Current alarm clear

As by the reset (RES) on, reset the servo amplifier alarm to make the servo amplifier ready to operate. After removing the cause of the alarm, reset the alarm with no command entered.

Command	Data No.	Data
[8][2]	[0][0]	1EA5

15.5.11 Point table

(1) Data read

(a) Position data

Read the position data of the point table.

1) Transmission

Transmit command [4][0] and any of data No. [0][1] to [F][F] corresponding to the point table to be read. Refer to section 15.4.1.

2) Reply

The slave station sends back the position data of the requested point table.

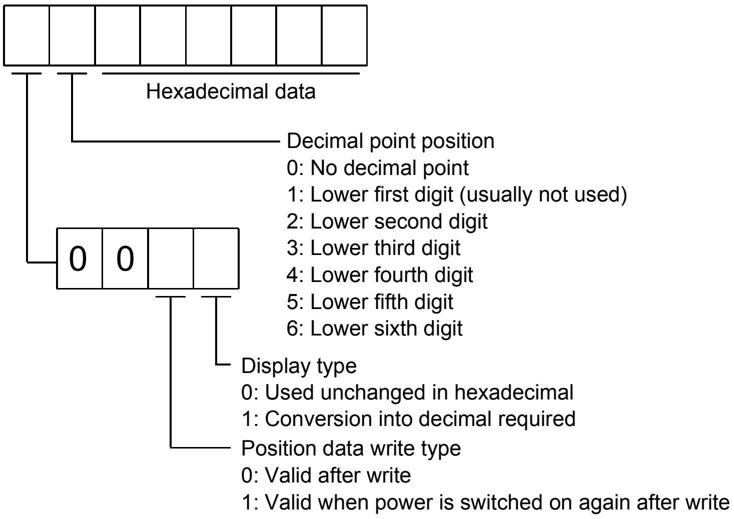

(b) Speed data

Read the speed data of the point table.

1) Transmission

Transmit command [5][0] and any of data No. [0][1] to [F][F] corresponding to the point table to be read. Refer to section 15.4.1.

2) Reply

The slave station sends back the speed data of the requested point table.

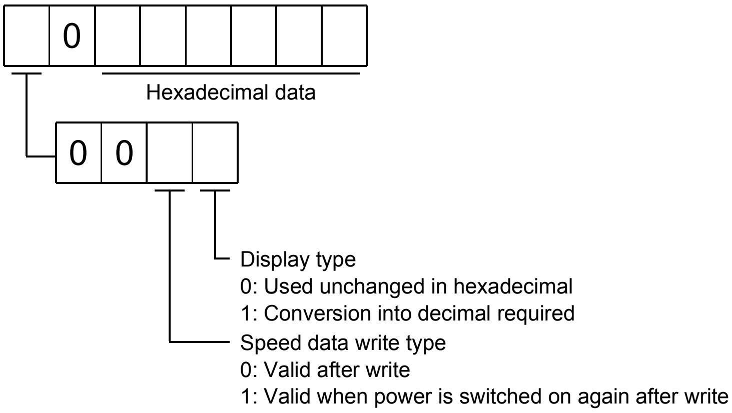

(c) Acceleration time constant

Read the acceleration time constant of the point table.

1) Transmission

Transmit command [5][4] and any of data No. [0][1] to [F][F] corresponding to the point table to be read. Refer to section 15.4.1.

2) Reply

The slave station sends back the acceleration time constant of the requested point table.

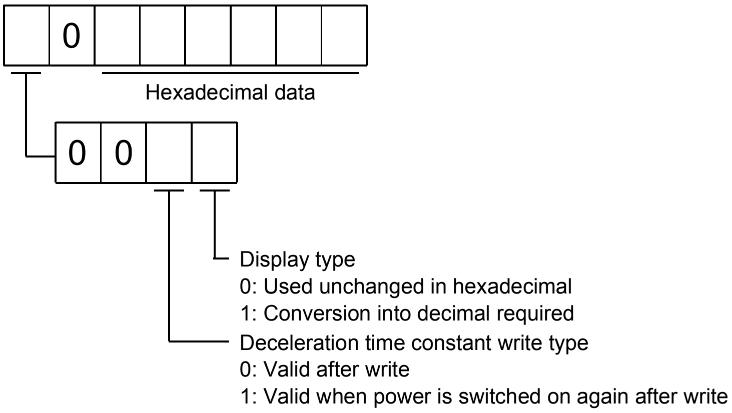

(d) Deceleration time constant

Read the deceleration time constant of the point table.

1) Transmission

Transmit command [5][8] and any of data No. [0][1] to [F][F] corresponding to the point table to be read. Refer to section 15.4.1.

2) Reply

The slave station sends back the deceleration time constant of the requested point table.

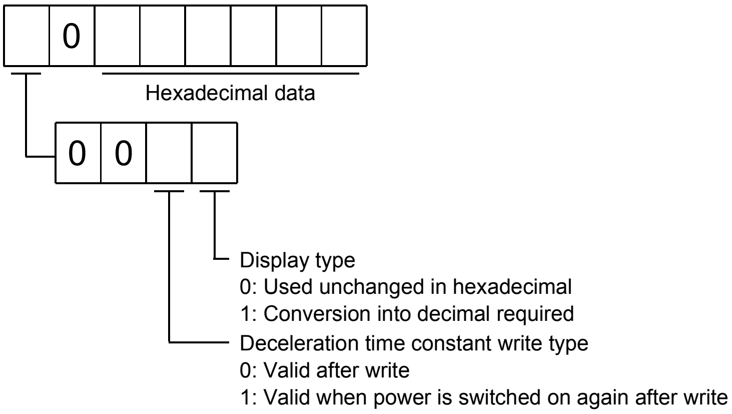

(e) Dwell

Read the dwell of the point table.

1) Transmission

Transmit command [6][0] and any of data No. [0][1] to [F][F] corresponding to the point table to be read. Refer to section 15.4.1.

2) Reply

The slave station sends back the dwell of the requested point table.

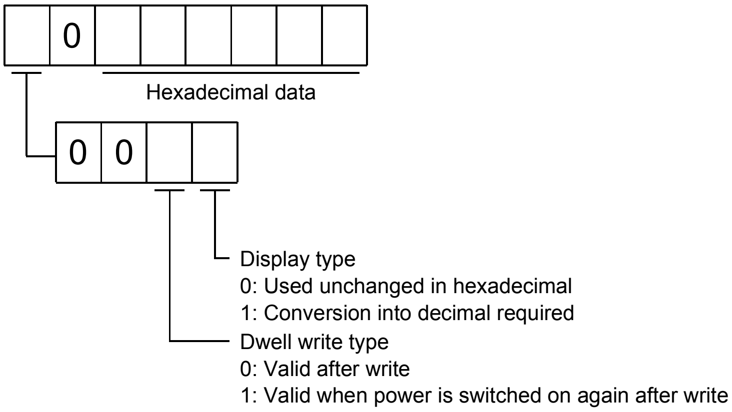

(f) Auxiliary function

Read the auxiliary function of the point table.

1) Transmission

Transmit command [6][4] and any of data No. [0][1] to [F][F] corresponding to the point table to be read. Refer to section 15.4.1.

2) Reply

The slave station sends back the auxiliary function of the requested point table.

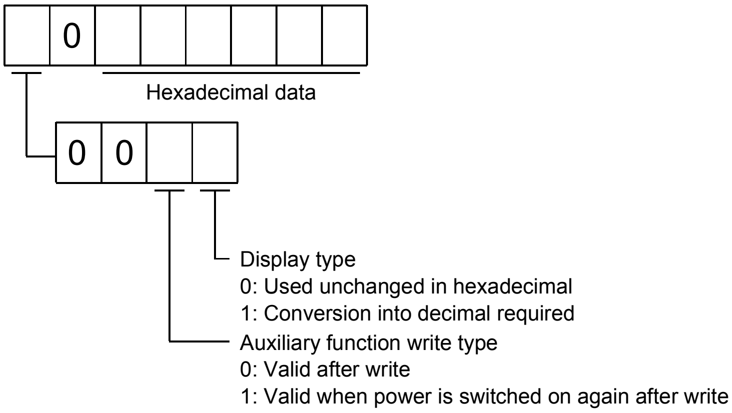

(2) Data write

POINT

- If setting values need to be changed with a high frequency (i.e. one time or more per one hour), write the setting values to the RAM, not the EEP-ROM. The EEP-ROM has a limitation in the number of write times and exceeding this limitation causes the servo amplifier to malfunction. Note that the number of write times to the EEP-ROM is limited to approximately 100, 000.

(a) Position data

Write the position data of the point table.

Transmit command [C][0], any of data No. [0][1] to [F][F] corresponding to the point table to be written to, and the data. Refer to section 15.4.2.

Command	Data No.	Data
[C][0]	[0][1] to [F][F]	See below.

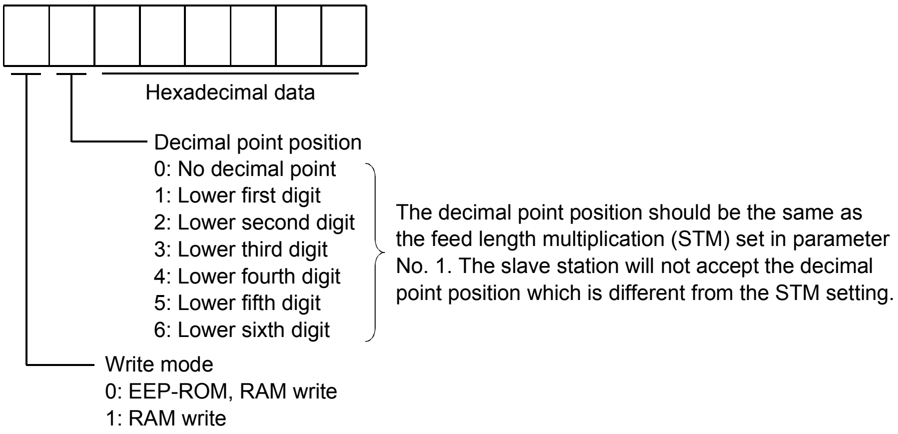

When the position data is changed frequently through communication,
set "1" to the write mode to change only the RAM data in the servo amplifier.
When changing data frequently (once or more within one hour),
do not write it to the EEP-ROM.

(b) Speed data

Write the speed data of the point table.

Transmit command [C][6], any of data No. [0][1] to [F][F] corresponding to the point table to be written to, and the data. Refer to section 15.4.2.

Command	Data No.	Data
[C][6]	[0][1] to [F][F]	See below.

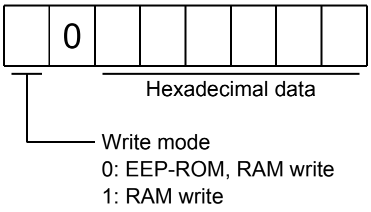

When the speed data is changed frequently through communication,
set "1" to the write mode to change only the RAM data in the servo amplifier.
When changing data frequently (once or more within one hour),
do not write it to the EEP-ROM.

(c) Acceleration time constant

Write the acceleration time constant of the point table.

Transmit command [C][7], any of data No. [0][1] to [F][F] corresponding to the point table to be written to, and the data. Refer to section 15.4.2.

Command	Data No.	Data
[C][7]	[0][1] to [F][F]	See below.

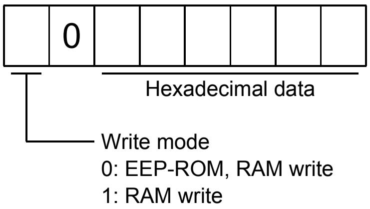

When the acceleration time constant is changed frequently through communication, set "1" to the write mode to change only the RAM data in the servo amplifier. When changing data frequently (once or more within one hour), do not write it to the EEP-ROM.

(d) Deceleration time constant

Write the deceleration time constant of the point table.

Transmit command [C][8], any of data No. [0][1] to [F][F] corresponding to the point table to be written to, and the data. Refer to section 15.4.2.

Command	Data No.	Data
[C][8]	[0][1] to [F][F]	See below.

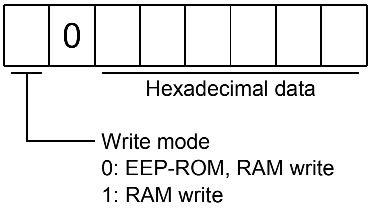

When the deceleration time is changed frequently through communication, set "1" to the write mode to change only the RAM data in the servo amplifier. When changing data frequently (once or more within one hour), do not write it to the EEP-ROM.

(e) Dwell

Write the dwell of the point table.

Transmit command [C][A], any of data No. [0][1] to [F][F] corresponding to the point table to be written to, and the data. Refer to section 15.4.2.

Command	Data No.	Data
[C][A]	[0][1] to [F][F]	See below.

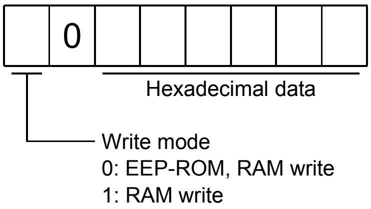

When the dwell constant is changed frequently through communication, set "1" to the write mode to change only the RAM data in the servo amplifier. When changing data frequently (once or more within one hour), do not write it to the EEP-ROM.

(f) Auxiliary function

Write the auxiliary function of the point table.

Transmit command [C][B], any of data No. [0][1] to [F][F] corresponding to the point table to be written to, and the data. Refer to section 15.4.2.

Command	Data No.	Data
[C][B]	[0][1] to [F][F]	See below.

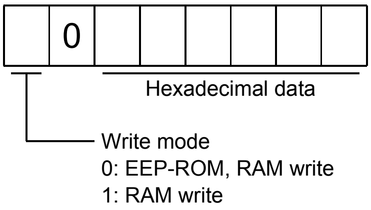

When the auxiliary function constant is changed frequently through communication, set "1" to the write mode to change only the RAM data in the servo amplifier. When changing data frequently (once or more within one hour), do not write it to the EEP-ROM.

15.5.12 Servo amplifier group designation

With group setting made to the slave stations, data can be transmitted simultaneously to two or more slave stations set as a group.

(1) Group setting write

Write the group designation value to the slave station.

(a) Transmission

Transmit command [9][F], data No. [0][0] and data.

Command	Data No.	Data
[9][F]	[0][0]	See below.

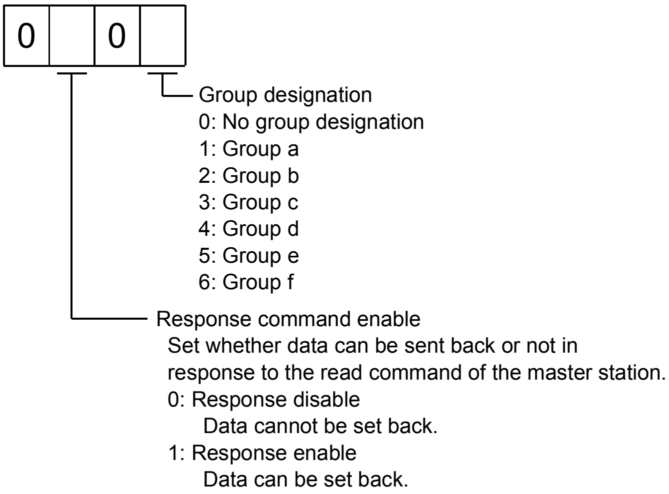

Group designation
0: No group designation
1: Group a
2: Group b
3: Group c
4: Group d
5: Group e
6: Group f

Response command enable
Set whether data can be sent back or not in response to the read command of the master station.
0: Response disable
Data cannot be set back.
1: Response enable
Data can be set back.

(2) Group setting read

Read the set group designation value from the slave station.

(a) Transmission

Transmit command [1][F] and data No. [0][0].

Command	Data No.
[1][F]	[0][0]

(b) Reply

The slave station sends back the group setting of the point table requested.

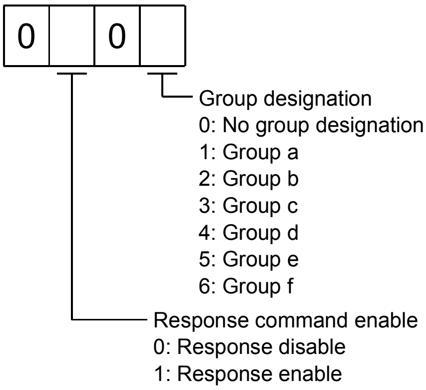

Group designation
0: No group designation
1: Group a
2: Group b
3: Group c
4: Group d
5: Group e
6: Group f

Response command enable
0: Response disable
1: Response enable

15.5.13 Other commands

(1) Servo motor-side pulse unit absolute position

Read the absolute position in the servo motor-side pulse unit.

Note that overflow will occur in the position of 8192 or more revolutions from the home position.

(a) Transmission

Send command [0][2] and data No. [9][0].

Command	Data No.
[0][2]	[9][0]

(b) Reply

The slave station sends back the requested servo motor-side pulses.

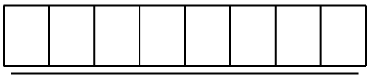

Absolute value is sent back in hexadecimal in
the servo motor side pulse unit.
(Must be converted into decimal)

For example, data "000186A0" is 100000 [pulse] in the motor side pulse unit.

(2) Command unit absolute position

Read the absolute position in the command unit.

(a) Transmission

Send command [0][2] and data No. [9][1].

Command	Data No.
[0][2]	[9][1]

(b) Reply

The slave station sends back the requested command pulses.

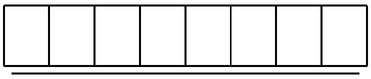

Absolute value is sent back in hexadecimal in the
command unit.
(Must be converted into decimal)

For example, data "000186A0" is 100000 [pulse] in the command unit.

(3) Software version

Reads the software version of the servo amplifier.

(a) Transmission

Send command [0][2] and data No.[7][0].

Command	Data No.
[0][2]	[7][0]

(b) Reply

The slave station returns the software version requested.

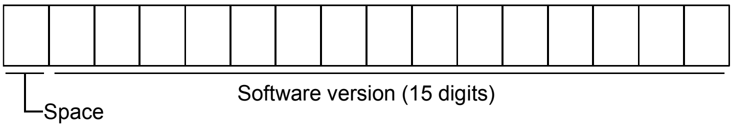

16. INDEXER POSITIONING OPERATION

POINT

- To execute the indexer positioning operation, parameter needs to be changed. Set the parameter No.PA01 to "1□□□".
- The indexer positioning operation is available with servo amplifiers with software version A6 or later.

This chapter provides the indexer positioning operation method using MR-J3-□T servo amplifier. Any matters not described in this chapter are the same as those of the point table positioning operation. For more information, refer to chapters up to 15.

16.1 Function

16.1.1 Overview

Using the next station selection 1 (RYnA) to the next station selection 8 (RY(n＋2)5) devices, stations from No.0 to No.254 can be specified.
Settings of servo motor speed and acceleration/deceleration time constant are carried out by specifying the point table number from 1 to 8 using the speed selection 1 (RY(n＋2)C) to the speed selection 3 (RY(n＋2)E) devices. Speed command data can be directly specified by using the remote register when two stations are occupied.

16.1.2 Servo amplifier standard specifications (functions only)

Item				Description
Command system		Station command input		Available with CC-Link communication CC-Link communication (1 station occupied): 31 stations CC-Link communication (2 stations occupied): 255 stations
		Speed command input	Remote register	Available with CC-Link communication (2 stations occupied) Set the speed command data (speed) by the remote register.
			Speed No. input	Select a speed and acceleration/deceleration time constant by the point table
Operation mode	Automatic operation mode	Rotation direction specifying indexer		Positioning operation is executed to the set station. Rotation direction can be specified.
		Shortest rotating indexer		Positioning operation is executed to the set station. The servo motor rotates in the closest direction from current position.
	Manual operation mode	Indexer JOG operation		Turning on the start signal (RYn1) makes the servo motor rotate in the direction specified by the rotation direction specifying. Turning off the start signal (RYn1) makes the servo motor perform positioning operation to the closest station where the motor can decelerate to stop.
		JOG operation		Executes an inching operation with the CC-Link communication based on speed data set with parameters.
	Home position return mode	Torque limit changing dog type		Home position return is performed by the Z-phase pulse count after passing proximity dog. Home position address may be set. Home position shift distance may be set. Home position return direction may be selected. Automatic retract on dog back to home position/automatic stroke retract function. Automatic torque limit changing function
		Torque limit changing data setting type		Home position return is made without dog. Home position may be set at any position by manual operation, etc. Home position address may be set. Automatic torque limit changing function

16.1.3 Function list

The following table lists the functions of this servo. For details of the functions, refer to the reference field.

Function	Description	Reference
Automatic operation mode 1 (Rotation direction specifying indexer)	In this operation mode, the servo motor rotates in the specified direction and performs a positioning operation to the next station divided in 2 to 255.	Section 16.7.2
Automatic operation mode 2 (Shortest rotating indexer)	In this operation mode, the servo motor rotates in the shortest direction and performs a positioning operation to the next station divided in 2 to 255.	Section 16.7.3
Manual operation mode	1. Indexer JOG operation When stopping, this JOG operation enables the servo motor to perform positioning to the station where the servo motor can decelerate to stop. 2. JOG operation When stopping, this JOG operation enables the servo motor to decelerate to stop regardless of stations.	Section 16.8
Home position return	Torque limit changing dog type, torque limit changing data setting type	Section 16.9
High-resolution encoder	High-resolution encoder of 262144 pulses/rev is used as a servo motor encoder.	
Absolute position detection system	By merely setting the home position once, home position return need not be done at each power on.	Section 16.10
Gain switching function	You can switch between gains during rotation and gains during stop or use an input device to change gains during operation.	Section 10.6
Advanced vibration suppression control	This function suppresses vibration at the arm end or residual vibration.	Section 10.4
Adaptive filter Ⅱ	Servo amplifier detects mechanical resonance and sets filter characteristics automatically to suppress mechanical vibration.	Section 10.2
Low-pass filter	Suppresses high-frequency resonance which occurs as servo system response is increased.	Section 10.5
Machine analyzer function	Analyzes the frequency characteristic of the mechanical system by simply connecting a MR Configurator installed personal computer and servo amplifier. MR Configurator is necessary for this function.	
Machine simulation	Can simulate machine motions on a personal computer screen on the basis of the machine analyzer results. MR Configurator is necessary for this function.	
Gain search function	Personal computer changes gains automatically and searches for overshoot-free gains in a short time. MR Configurator is necessary for this function.	
Robust disturbance compensation	For roll feed axis, etc. of which a response level cannot be increased because of the large load to motor inertia ratio, this function improves a disturbance response. MR Configurator is necessary for this function.	
Advanced gain search	Advanced gain search automatically searches for the optimum parameter for settle time to be short. The gain can be adjusted by setting sequentially in accordance with wizard screens. MR Configurator is necessary for this function.	
Slight vibration suppression control	Suppresses vibration of ±1 pulse produced at a servo motor stop.	Parameters No. PB24
Electronic gear	The electronic gear is used to make adjustment so that the servo amplifier setting matches the machine moving distance. Also, changing the electronic gear value allows the machine to be moved at any multiplication ratio to the moving distance using the servo amplifier.	Parameter No. PA06, PA07
Auto tuning	Automatically adjusts the gain to optimum value if load applied to the servo motor shaft varies.	Section 9.2
Regenerative option	Used when the built-in regenerative resistor of the servo amplifier does not have sufficient regenerative capability for the regenerative power generated.	Section 14.2
Brake unit	Used when the regenerative option cannot provide enough regenerative power. Can be used with the servo amplifier of 5kW or more.	Section 14.3
Regeneration converter	Used when the regenerative option cannot provide enough regenerative power. Can be used with the servo amplifier of 5kW or more.	Section 14.4

Function	Description	Reference
Alarm history clear	Alarm history is cleared.	Parameter No. PC18
Torque limit	Servo motor-torque is limited.	Section 16.3.2 (3) Section 16.11.1 (9)
Output signal (DO) forced output	Output signal can be forced on/off independently of the servo status. Use this function for output signal wiring check, etc.	Section 7.7.4 Section 8.5.7(4)
Test operation mode	JOG operation ・ positioning operation ・ DO forced output. MR Configurator is necessary for this function.	Section 7.7 Section 8.5.7
Limit switch	The servo motor travel region can be limited using the forward rotation stroke end (LSP)/reverse rotation stroke end (LSN).	

16.2 I/O signals (I/O devices) transferred to/from the programmable controller CPU

16.2.1 I/O signals (I/O devices)

(1) When 1 station is occupied

RYn/RXn: 32 points each, RWrn/RWwn: 4 points each

Programmable controller → Servo amplifier (RYn)	
(Note) Device No.	Device name
RYn0	Servo-on
RYn1	Start
RYn2	Rotation direction specifying
RYn3 to RYn5	Not available
RYn6	Operation mode selection 1
RYn7	Operation mode selection 2
RYn8	Monitor output execution demand
RYn9	Instruction code execution demand
RYnA	Next station selection 1
RYnB	Next station selection 2
RYnC	Next station selection 3
RYnD	Next station selection 4
RYnE	Next station selection 5
RYnF to RY(n＋1)9	Not available
RY(n＋1)A	Reset
RY(n＋1)B to RY(n＋1)F	Not available

Servo amplifier → Programmable controller (RXn)	
(Note) Device No.	Device name
RXn0	Ready
RXn1	In position
RXn2	Rough match
RXn3	Home position return completion
RXn4	Limiting torque
RXn5	Not available
RXn6	Electromagnetic brake interlock
RXn7	Not available
RXn8	Monitoring
RXn9	Instruction code execution completion
RXnA	Warning
RXnB	Battery warning
RXnC	Movement completion
RXnD	Dynamic brake interlock
RXnE to RX(n＋1)9	Not available
RX(n＋1)A	Trouble
RX(n＋1)B	Remote station communication ready
RX(n＋1)C to RX(n＋1)F	Not available

Programmable controller → Servo amplifier (RWwn)	
Address No.	Signal
RWwn	Monitor 1
RWwn＋1	Monitor 2
RWwn＋2	Instruction code
RWwn＋3	Writing data

Servo amplifier → Programmable controller (RWrn)	
Address No.	Signal
RWrn	Monitor 1 data
RWrn＋1	Monitor 2 data
RWrn＋2	Respond code
RWrn＋3	Reading data

Note. "n" depends on the station number setting.

(2) When 2 stations are occupied

RXn/RYn: 64 points each, RWrn/RWwn: 8 points each

Programmable controller → Servo amplifier (RYn)	
(Note) Device No.	Device name
RYn0	Servo-on
RYn1	Start
RYn2	Rotation direction specifying
RYn3 to RYn5	Not available
RYn6	Operation mode selection 1
RYn7	Operation mode selection 2
RYn8	Monitor output execution demand
RYn9	Instruction code execution demand
RYnA	Next station selection 1
RYnB	Next station selection 2
RYnC	Next station selection 3
RYnD	Next station selection 4
RYnE	Next station selection 5
RYnF to RY(n＋1)F	Not available
RY(n＋2)0	Position command execution demand
RY(n＋2)1	Speed command execution demand
RY(n＋2)2	Not available
RY(n＋2)3	Next station selection 6
RY(n＋2)4	Next station selection 7
RY(n＋2)5	Next station selection 8
RY(n＋2)6	Internal torque limit selection
RY(n＋2)7	Proportion control
RY(n＋2)8	Gain switching
RY(n＋2)9	Not available
RY(n＋2)A	Position/speed specifying system selection
RY(n＋2)B	Not available
RY(n＋2)C	Speed selection 1
RY(n＋2)D	Speed selection 2
RY(n＋2)E	Speed selection 3
RY(n＋2)F to RY(n＋3)9	Not available
RY(n＋3)A	Reset
RY(n＋3)B to RY(n＋3)F	Not available

Servo amplifier → Programmable controller (RXn)	
(Note) Device No.	Device name
RXn0	Ready
RXn1	In position
RXn2	Rough match
RXn3	Home position return completion
RXn4	Limiting torque
RXn5	Not available
RXn6	Electromagnetic brake interlock
RXn7	Not available
RXn8	Monitoring
RXn9	Instruction code execution completion
RXnA	Warning
RXnB	Battery warning
RXnC	Movement completion
RXnD	Dynamic brake interlock
RXnE to RX(n＋1)F	Not available
RX(n＋2)0	Position command execution completion
RX(n＋2)1	Speed command execution completion
RX(n＋2)2	Station output 1
RX(n＋2)3	Station output 2
RX(n＋2)4	Station output 3
RX(n＋2)5	Station output 4
RX(n＋2)6	Station output 5
RX(n＋2)7	Station output 6
RX(n＋2)8	Station output 7
RX(n＋2)9	Station output 8
RX(n＋2)A to RX(n＋3)9	Not available
RX(n＋3)A	Trouble
RX(n＋3)B	Remote station communication ready
RX(n＋3)C to RX(n＋3)F	Not available

Note. "n" depends on the station number setting.

Programmable controller → Servo amplifier (RWwn)	
(Note 1) Address No.	Signal
RWwn	Monitor 1 (Note 2)
RWwn＋1	Monitor 2 (Note 2)
RWwn＋2	Instruction code
RWwn＋3	Writing data
RWwn＋4	Next station
RWwn＋5	Not available
RWwn＋6	Point table No./Speed command data (Note 3)
RWwn＋7	Not available

Servo amplifier → Programmable controller (RWrn)	
(Note 1) Address No.	Signal
RWrn	Monitor 1 data lower 16 bit
RWwn＋1	Monitor 1 data upper 16 bit
RWwn＋2	Respond code
RWwn＋3	Reading data
RWwn＋4	Not available
RWwn＋5	Monitor 2 data lower 16 bit
RWwn＋6	Monitor 2 data upper 16 bit
RWwn＋7	Not available

Note 1. "n" depends on the station number setting.

2. Specify the code of the lower 16 bit as the monitor code of 32-bit data.

3. When the parameter No.PC30 setting is "□□0□", specify the point table No. in RWwn＋6. When the parameter No.PC30 setting is "□□1□", specify the speed data in RWwn＋6, and turn ON Speed command execution demand (RY(n＋2)1). When setting the parameter No.PC30 to "□□1□", always set the acceleration/deceleration time constant in the point table No.1.

16.2.2 Detailed explanation of I/O signals

(1) Input signals (Input devices)

The note signs in the remarks column indicate the following descriptions.

*: Can be automatic turned ON internally by setting parameters No.PD01.

Signal name (Device name)	Description	Device No.		Remarks
		1 station occupied	2 stations occupied	
Servo-on	Turning RYn0 ON powers on the base circuit, making operation ready to start. (Servo on status) Turning it OFF powers off the base circuit, coasting the servo motor. (Servo off status)	RYn0	RYn0	*
Start	1. Automatic operation mode 1 and 2 Turning on RYn1 performs positioning operation once to the specified station number. 2. Manual operation mode Turning on RYn1 in the indexer JOG operation makes the servo motor rotate in the RYn2 specified direction only while RYn1 is on. Turning it off makes the servo motor perform positioning to the station where the servo motor can decelerate to stop. Turning on RYn1 in JOG operation makes the servo motor rotate in the RYn2 specified direction only while RYn1 is on. Turning it off makes the servo motor decelerate to stop regardless of stations. 3. Home position return mode Turning on RYn1 immediately starts a home position return.	RYn1	RYn1	

<table>
<tr><th rowspan="2">Signal name
(Device name)</th><th rowspan="2">Description</th><th colspan="2">Device No.</th><th rowspan="2">Remarks</th></tr>
<tr><th>1 station occupied</th><th>2 stations occupied</th></tr>
<tr><td>Rotation direction specifying</td><td>Turning on/off RYn2 specifies the rotation direction at start.
1. Automatic operation mode 1
Rotation direction changes according to the parameter No.PA14 setting. RYn2 is used only for the automatic operation mode 1 (Rotation direction specifying indexer). It is not used for the automatic operation mode 2 (Shortest rotating indexer).
<table>
<tr><th>(Note) RYn2</th><th>Parameter No.PA14</th><th>Servo motor rotation direction</th></tr>
<tr><td rowspan="2">0</td><td>0</td><td>CCW</td></tr>
<tr><td>1</td><td>CW</td></tr>
<tr><td rowspan="2">1</td><td>0</td><td>CW</td></tr>
<tr><td>1</td><td>CCW</td></tr>
</table>
Note. 0: OFF
1: ON

2. Manual operation mode
It is not affected by the parameter No.PA14.
<table>
<tr><th>(Note) RYn2</th><th>Parameter No.PA14</th><th>Servo motor rotation direction</th></tr>
<tr><td rowspan="2">0</td><td>0</td><td rowspan="2">CCW</td></tr>
<tr><td>1</td></tr>
<tr><td rowspan="2">1</td><td>0</td><td rowspan="2">CW</td></tr>
<tr><td>1</td></tr>
</table>
Note. 0: OFF
1: ON

3. Home position return mode
RYn2 is invalid. Specify the rotation direction in the home position return mode by using the parameter No.PC03.</td><td>RYn2</td><td>RYn2</td><td></td></tr>
<tr><td>Operation mode selection 1</td><td rowspan="2">Select the operation mode.
<table>
<tr><th colspan="2">(Note)
RY of
CC-Link</th><th rowspan="2">Operation mode</th></tr>
<tr><th>Ryn7</th><th>Ryn6</th></tr>
<tr><td>0</td><td>0</td><td>Home position return mode</td></tr>
<tr><td>0</td><td>1</td><td>Manual operation mode</td></tr>
<tr><td>1</td><td>0</td><td>Automatic operation mode 1
(Rotation direction specifying indexer)</td></tr>
<tr><td>1</td><td>1</td><td>Automatic operation mode 2
(Shortest rotating indexer)</td></tr>
</table>
Note. 0: OFF
1: ON</td><td>RYn6</td><td>RYn6</td><td></td></tr>
<tr><td>Operation mode selection 2</td><td>RYn7</td><td>RYn7</td><td></td></tr>
</table>

<table>
<tr><th rowspan="2">Signal name
(Device name)</th><th rowspan="2">Description</th><th colspan="2">Device No.</th><th rowspan="2">Remarks</th></tr>
<tr><th>1 station occupied</th><th>2 stations occupied</th></tr>
<tr><td>Monitor output execution demand</td><td>When RYn8 is turned ON, the following data and signals are set. At the same time, RXn8 turns ON. While RYn8 is ON, the monitor values are kept updated.
1) When 1 station is occupied
Remote register RWrn: Data demanded by Monitor 1 (RWwn)
Remote register RWrn＋1: Data demanded by Monitor 2 (RWwn＋1)
Remote register RWrn＋2: Respond code indicating normal or error
2) When 2 stations are occupied
Remote register RWrn: Lower 16 bits of data demanded by Monitor 1 (RWwn)
Remote register RWrn＋1: Upper 16 bits of data demanded by Monitor 1 (RWwn)
Remote register RWrn＋5: Lower 16 bits of data demanded by Monitor 2 (RWwn＋2)
Remote register RWrn＋6: Upper 16 bits of data demanded by Monitor 2 (RWwn＋2)
Remote register RWrn＋2: Respond code indicating normal or error</td><td>RYn8</td><td>RYn8</td><td></td></tr>
<tr><td>Instruction code execution demand</td><td>Turning RYn9 ON executes the processing corresponding to the instruction code stored in remote register RWwn＋2.
After completion of instruction code execution, the respond code indicating normal or error is set to RWrn＋2. At the same time, RXn9 turns ON.
Refer to section 16.2.4 for details.</td><td>RYn9</td><td>RYn9</td><td></td></tr>
<tr><td>Next station selection 1</td><td rowspan="8">Select the station number by using RYnA to RY(n＋2)5.
<table>
<tr><th rowspan="2">Station No.</th><th colspan="8">(Note 1) RY of CC-Link</th></tr>
<tr><th>RY (n+2)5</th><th>RY (n+2)4</th><th>RY (n+2)3</th><th>RYnE</th><th>RYnD</th><th>RYnC</th><th>RYnB</th><th>RYnA</th></tr>
<tr><td>0</td><td>0</td><td>0</td><td>0</td><td>0</td><td>0</td><td>0</td><td>0</td><td>0</td></tr>
<tr><td>1</td><td>0</td><td>0</td><td>0</td><td>0</td><td>0</td><td>0</td><td>0</td><td>1</td></tr>
<tr><td>2</td><td>0</td><td>0</td><td>0</td><td>0</td><td>0</td><td>0</td><td>1</td><td>0</td></tr>
<tr><td>3</td><td>0</td><td>0</td><td>0</td><td>0</td><td>0</td><td>0</td><td>1</td><td>1</td></tr>
<tr><td>4</td><td>0</td><td>0</td><td>0</td><td>0</td><td>0</td><td>1</td><td>0</td><td>0</td></tr>
<tr><td>⋮</td><td>⋮</td><td>⋮</td><td>⋮</td><td>⋮</td><td>⋮</td><td>⋮</td><td>⋮</td><td>⋮</td></tr>
<tr><td>254</td><td>1</td><td>1</td><td>1</td><td>1</td><td>1</td><td>1</td><td>1</td><td>0</td></tr>
<tr><td>(Note 2)</td><td>1</td><td>1</td><td>1</td><td>1</td><td>1</td><td>1</td><td>1</td><td>1</td></tr>
</table>
Note 1. 0: OFF
1: ON
2. When setting “1” for all RYnA to RYnE and RY(n＋2)3 to RY(n＋2)5, the station warning (A97) occurs.</td><td>RYnA</td><td>RYnA</td><td rowspan="8"></td></tr>
<tr><td>Next station selection 2</td><td>RYnB</td><td>RYnB</td></tr>
<tr><td>Next station selection 3</td><td>RYnC</td><td>RYnC</td></tr>
<tr><td>Next station selection 4</td><td>RYnD</td><td>RYnD</td></tr>
<tr><td>Next station selection 5</td><td>RYnE</td><td>RYnE</td></tr>
<tr><td>Next station selection 6</td><td></td><td>RY(n＋2)3</td></tr>
<tr><td>Next station selection 7</td><td></td><td>RY(n＋2)4</td></tr>
<tr><td>Next station selection 8</td><td></td><td>RY(n＋2)5</td></tr>
</table>

Signal name (Device name)	Description	Device No.		Remarks
		1 station occupied	2 stations occupied	
Position command execution demand	When RY(n＋2) is turned on, the next station number set in the remote register RWwn＋4 is set. When it is set to the servo amplifier, the respond code indicating normal or error is set to RWrn＋2. At the same time, Position command execution completion (RX(n＋2)0) turns ON. Refer to section 3.6.3 for details.		RY(n＋2)0	
Speed command demand	When RY(n＋2)1 is turned ON, the point table No. or speed command data set to remote register RWwn＋6 is set. When it is set to the servo amplifier, the respond code indicating normal or error is set to RWrn＋2. At the same time, Speed command execution completion (RX(n＋2)1) turns ON. Refer to section 3.6.3 for details.		RY(n＋2)1	
Internal torque limit selection	Turning RY(n＋2)6 OFF makes the torque limit value of parameter No.PA11 (forward rotation torque limit) ・ parameter No.PA12 (reverse rotation torque limit) valid, and turning it ON makes that of parameter No.PC35 (internal torque limit). (Refer to section 16.3.2 (3))		RY(n＋2)6	
Proportion control	When RY(n＋2)7 is turned ON, the speed amplifier is switched from the proportional integral type to the proportional type. If the servo motor at a stop is rotated even one pulse by an external factor, it develops torque in an attempt to compensate for a position shift. When the shaft is locked mechanically after Movement completion (RXnC) is turned OFF, for example, turning Proportion control (RY(n＋2)7) ON as soon as Movement completion (RXnC) turns OFF allows control of unnecessary torque developed in an attempt to compensate for a position shift. When the shaft is to be locked for an extended period of time, turn Internal torque limit selection (RY(n＋2)6) ON simultaneously with Proportion control (RY(n＋2)7) to make the torque not more than the rated torque using Internal torque limit (parameter No.PC35).		RY(n＋2)7	*
Gain switching	When RY(n＋2)8 is turned ON, the load inertia moment ratio and the corresponding gain values change to the values of parameter No.PB29 to PB34. To change the gain using RY(n＋2)8, make the auto tuning invalid.		RY(n＋2)8	
Position/speed specifying system selection	Select how to give a speed command. (Refer to section 3.6.3.) OFF: RY of CC-Link-based speed specifying system Specifying the point table No. with Point table No. selection (RYnA to RYnE) gives a speed command. ON : Remote register-based speed specifying system Setting the instruction code to the remote register (RWwn＋4 to RWwn＋6) gives a speed command. Set the parameter No.PC30 (direct specification selection) to "□□1□".		RY(n＋2)A	

<table>
<tr><th rowspan="2">Signal name
(Device name)</th><th rowspan="2">Description</th><th colspan="2">Device No.</th><th rowspan="2">Remarks</th></tr>
<tr><th>1 station occupied</th><th>2 stations occupied</th></tr>
<tr><td>Speed selection 1</td><td rowspan="3">Set the servo motor speed, acceleration time constant, and deceleration time constant for positioning operation by selecting the point table number from 1 to 8 using RY(n+2)C, RY(n+2)D, and RY(n+2)E.
<table><tr><th colspan="3">(Note) RY of CC-Link</th><th rowspan="2">Point table No.</th></tr><tr><th>RY(n+2)E</th><th>RY(n+2)D</th><th>RY(n+2)C</th></tr><tr><td>0</td><td>0</td><td>0</td><td>1</td></tr><tr><td>0</td><td>0</td><td>1</td><td>2</td></tr><tr><td>0</td><td>1</td><td>0</td><td>3</td></tr><tr><td>0</td><td>1</td><td>1</td><td>4</td></tr><tr><td>1</td><td>0</td><td>0</td><td>5</td></tr><tr><td>1</td><td>0</td><td>1</td><td>6</td></tr><tr><td>1</td><td>1</td><td>0</td><td>7</td></tr><tr><td>1</td><td>1</td><td>1</td><td>8</td></tr></table>Note. 0: OFF
1: ON</td><td></td><td>RY(n+2)C</td><td></td></tr>
<tr><td>Speed selection 2</td><td></td><td>RY(n+2)D</td><td></td></tr>
<tr><td>Speed selection 3</td><td></td><td>RY(n+2)E</td><td></td></tr>
<tr><td>Reset</td><td>Keeping RY(n+1)A or RY(n+3)A ON for 50ms or longer allows an alarm to be deactivated.
Some alarms cannot be deactivated by Reset RY(n+1)A or RY(n+3)A. (Refer to section 16.12.4 (1))
If RY(n+1)A or RY(n+3)A is turned ON with no alarm occurring, the base circuit will not be shut off. When "□□1□" is set in parameter No.PD20 (function selection D-1), the base circuit is shut off.
This device is not designed to make a stop. Do not turn it ON during operation.</td><td>RY(n+1)A</td><td>RY(n+3)A</td><td></td></tr>
</table>

(2) Output signals (Output device)

> POINT
>
> - The output devices can be used for both the RX of CC-Link and the external output signals of CN6 connector.

The signal whose Device No. field has an oblique line cannot be used in CC-Link.

Signal name (Device name)	Description	Device No.	
		1 station occupied	2 stations occupied
Ready	A ready is assigned to the CN6-14 pin as an external output signal. RXn0 turns ON when the servo amplifier is ready to operate after servo-on.	RXn0	RXn0
In position	RXn1 turns ON when the droop pulse value is within the preset in-position range. The in-position range can be changed using parameter No.PA10. Increasing the in-position range may result in a continuous conduction status during low-speed rotation. RXn1 turns ON at servo-on.	RXn1	RXn1
Rough match	RXn2 turns ON when the command remaining distance becomes less than the rough match output range set in the parameter. This is not outputted during base circuit shut-off. RXn2 turns ON at servo-on.	RXn2	RXn2
Home position return completion	The home position return completion is assigned to the CN6-16 pin as an external output signal. RXn3 turns ON when a home position return is completed. RXn3 turns ON at completion of a home position return. In an absolute position detection system, RXn3 turns ON when operation is ready to start, but turns OFF in any of the following cases. 1) Servo-on (RYn0) is turned OFF. 2) Forced stop (EMG) is turned OFF. 3) Reset (RY(n＋1)A or RY(n＋3)A) is turned ON. 4) Alarm occurs. 5) Forward rotation stroke end (RYn4) or Reverse rotation stroke end (RYn5) is turned OFF. 6) Home position return has not been made after product purchase. 7) Home position return has not been made after occurrence of Absolute position erase (A25) or Absolute position counter warning (AE3). 8) Home position return has not been made after electronic gear change. 9) Home position return has not been made after the absolute position detection system was changed from invalid to valid. 10) Parameter No.PA14 (Station No. direction selection) has been changed. 11) While a home position return is being made. When any of 1) to 11) has not occurred and a home position return is already completed at least once, Home position return completion (RXn3) turns to the same output status as Ready (RXn0).	RXn3	RXn3
Limiting torque	RXn4 turns ON when the torque is reached at the time of torque generation.	RXn4	RXn4
Electromagnetic brake interlock	RXn6 turns OFF at servo-off or alarm occurrence. At alarm occurrence, it turns OFF independently of the base circuit status.	RXn6	RXn6
Monitoring	Refer to Monitor output execution demand (RYn8).	RXn8	RXn8
Instruction code execution completion	Refer to Instruction code execution demand (RYn9).	RXn9	RXn9

<table>
<tr><th rowspan="2">Signal name
(Device name)</th><th rowspan="2">Description</th><th colspan="2">Device No.</th></tr>
<tr><th>1 station occupied</th><th>2 stations occupied</th></tr>
<tr><td>Warning</td><td>RXnA turns ON when a warning occurs.
When no warning has occurred, RXnA turns OFF within about 1s after power-on.</td><td>RXnA</td><td>RXnA</td></tr>
<tr><td>Battery warning</td><td>RXnB turns ON when Open battery cable warning (A92) or Battery warning (A9F) occurs. When no battery warning has occurred, RXnB turns OFF within about 1s after power-on.</td><td>RXnB</td><td>RXnB</td></tr>
<tr><td>Movement completion</td><td>RXnC turns ON when In position (RXn1) turns ON and the command remaining distance is "0".
RXnC turns ON at servo-on.</td><td>RXnC</td><td>RXnC</td></tr>
<tr><td>Dynamic brake interlock</td><td>RXnD turns ON when the dynamic brake needs to operate. When using the external dynamic brake on the servo amplifier of 11kW or more, this device is required. (Refer to section 14.6.) For the servo amplifier of 7kw or less, it is not necessary to use this device.</td><td>RXnD</td><td>RXnD</td></tr>
<tr><td>Position command execution completion</td><td>Refer to Speed command execution demand (RY(n＋2)0).</td><td></td><td>RX(n＋2)0</td></tr>
<tr><td>Speed command execution completion</td><td>Refer to Position command execution demand (RY(n＋2)1).</td><td></td><td>RX(n＋2)1</td></tr>
<tr><td>Station output 1</td><td rowspan="8">As soon as the movement completion (RXnC) turns on, the station number is output in 8-bit code.
<table>
<tr><th rowspan="2">Station No.</th><th colspan="8">(Note 1) RX of CC-Link</th></tr>
<tr><th>RX (n+2)9</th><th>RX (n+2)8</th><th>RX (n+2)7</th><th>RX (n+2)6</th><th>RX (n+2)5</th><th>RX (n+2)4</th><th>RX (n+2)3</th><th>RX (n+2)2</th></tr>
<tr><td>(Note 2)</td><td>0</td><td>0</td><td>0</td><td>0</td><td>0</td><td>0</td><td>0</td><td>0</td></tr>
<tr><td>0</td><td>1</td><td>1</td><td>1</td><td>1</td><td>1</td><td>1</td><td>1</td><td>1</td></tr>
<tr><td>1</td><td>1</td><td>1</td><td>1</td><td>1</td><td>1</td><td>1</td><td>1</td><td>0</td></tr>
<tr><td>2</td><td>1</td><td>1</td><td>1</td><td>1</td><td>1</td><td>1</td><td>0</td><td>1</td></tr>
<tr><td>⋮</td><td>⋮</td><td>⋮</td><td>⋮</td><td>⋮</td><td>⋮</td><td>⋮</td><td>⋮</td><td>⋮</td></tr>
<tr><td>253</td><td>0</td><td>0</td><td>0</td><td>0</td><td>0</td><td>0</td><td>1</td><td>0</td></tr>
<tr><td>254</td><td>0</td><td>0</td><td>0</td><td>0</td><td>0</td><td>0</td><td>0</td><td>1</td></tr>
</table>
Note 1. 0: OFF
1: ON
2. All turn to "0" (OFF) when the current position is out of the in-position range.

At power-on, emergency stop or alarm occurrence, if the current position is within the in-position range of each station, corresponding station number is output.
While operating in the automatic operation mode, if the current position is within the in-position range of the target next station, corresponding station number is output.
While operating in the indexer JOG operation of manual operation mode, if the current position is within the in-position range of the station where the servo motor stops by turning off the start (RYn1), corresponding station number is output.
When home position return is incomplete, station number is not output.</td><td rowspan="8"></td><td>RX(n＋2)2</td></tr>
<tr><td>Station output 2</td><td>RX(n＋2)3</td></tr>
<tr><td>Station output 3</td><td>RX(n＋2)4</td></tr>
<tr><td>Station output 4</td><td>RX(n＋2)5</td></tr>
<tr><td>Station output 5</td><td>RX(n＋2)6</td></tr>
<tr><td>Station output 6</td><td>RX(n＋2)7</td></tr>
<tr><td>Station output 7</td><td>RX(n＋2)8</td></tr>
<tr><td>Station output 8</td><td>RX(n＋2)9</td></tr>
</table>

Signal name (Device name)	Description	Device No.	
		1 station occupied	2 stations occupied
Trouble	A trouble is assigned to the CN6-15 pin as an external output signal. RX(n＋1)A or RX(n+3)A turns ON when the protective circuit is activated to shut off the base circuit. When no alarm has occurred, RX(n＋1)A or RX(n＋3)A turns OFF within about 1.5s after power is switched ON.	RX(n＋1)A	RX(n＋3)A
Remote station communication ready	This signal turns ON at power-on and turns off at a trouble occurrence or in the reset (RY(n＋1)A or RY(n＋3)A) ON status.	RX(n＋1)B	RX(n＋3)B

(3) Remote registers

The signal whose Remote Register field has an oblique line cannot be used.

(a) Input (Programmable controller → servo amplifier)

Remote register		Signal name	Description	Setting range
1 station occupied	2 stations occupied			
RWwn	RWwn	Monitor 1	Demands the status indication data of the servo amplifier. 1) When 1 station is occupied Setting the monitor code of the status indication item to be monitored to RWwn and turning RYn8 to ON sets data to RWrn. RXn8 turns on at the same time. 2) When 2 stations are occupied Setting the monitor code of the status indication item to be monitored to RWwn and turning RYn8 to ON sets data to RWrn. RXn8 turns on at the same time. When demanding 32-bit data, specifying the lower 16-bit code No. and turning RYn8 to ON set the lower 16-bit data to RWwn and the upper 16-bit data to RWrn. data is stored in the RXn8. RXn8 turns on at the same time. Refer to section 16.2.3 for the item of the monitor code of the status indication.	Refer to section 16.2.3.
RWwn+1	RWwn+1	Monitor 2	Demands the status indication data of the servo amplifier. 1) When 1 station is occupied Setting the monitor code of the status indication item to be monitored to RWwn+1 and turning RYn8 to ON sets data to RWrn+1. RXn8 turns on at the same time. 2) When 2 stations are occupied Setting the monitor code of the status indication item to be monitored to RWwn+1 and turning RYn8 to ON sets data to RWrn+5. RXn8 turns on at the same time. When demanding 32-bit data, specifying the lower 16-bit code No. and turning RYn8 to ON set the lower 16-bit data to RWwn＋5 and the upper 16-bit data to RWrn+6. Data is stored in the RXn8. RXn8 turns on at the same time. Refer to section 16.2.3 for the item of the monitor code of the status indication.	Refer to section 16.2.3.
RWwn＋2	RWwn＋2	Instruction code	Sets the instruction codes used to perform parameter or point table data read and write, alarm reference or the like. Setting the instruction code No. to RWwn＋2 and turning RYn9 to ON execute the instruction. RXn9 turns to ON upon completion of command execution. Refer to section 16.2.4 (1) for instruction code No. definitions.	Refer to section 16.2.4 (1).

Remote register		Signal name	Description	Setting range
1 station occupied	2 stations occupied			
RWwn＋3	RWwn＋3	Writing data	Sets the written data used to perform parameter or point table data write, alarm history clear or the like. Setting the written data to RWwn＋3 and turning RYn9 to ON write the data to the servo amplifier. RXn9 turns to ON upon completion of write. Refer to section 16.2.4 (2) for written data definitions.	Refer to section 16.2.4 (2).
	RWwn＋4	Next station	Set the next station No. to be positioned in the automatic operation mode when 2 stations are occupied. When the next station No. is set to RWwn+4 and RY(n+2)0 is turned ON, the next station No. is set to the servo amplifier. On completion of setting, RX(n+2)0 turns ON.	Next station No.: 0 to 254
	RWwn＋6	Point table No./Position command data	1. When using speed data of point table, set the point table No. to RWwn+6. 2. When directly setting the servo motor speed, set the servo motor speed to RWwn+6. In this case, always set the acceleration/deceleration time constant in the point table No.1.	Point table No.: 1 to 255 Servo amplifier speed: 0 to permissible speed

(b) Output (Servo amplifier → Programmable controller)

Note that the data set to RWrn and RWrn＋1 depends on whether 1 station or 2 stations are occupied.

If you set inappropriate code No. or data to the remote register input, the error code is set to respond code (RWrn＋2). Refer to section 3.5.5 for the error code.

When 1 station is occupied

Remote register	Signal name	Description
RWrn	Monitor 1 data	The data of the monitor code set to RWwn is set.
RWrn＋1	Monitor 2 data	The data of the monitor code set to RWwn＋1 is set.
RWrn＋2	Respond code	"0000" is set when the codes set to RWwn to RWwn＋3 are executed normally.
RWrn＋3	Reading data	Data corresponding to the read code set to RWwn＋2 is set.

When 2 stations are occupied

Remote register	Signal name	Description
RWrn	Monitor 1 data lower 16bit	The lower 16 bits of the data of the monitor code set to RWwn are set.
RWrn＋1	Monitor 1 data upper 16bit	The upper 16 bits of the data of the monitor code set to RWwn are set. A sign is set if there are no data in the upper 16 bits.
RWrn＋2	Respond code	"0000" is set when the codes set to RWwn to RWwn＋6 are executed normally.
RWrn＋3	Reading data	Data corresponding to the read code set to RWwn＋2 is set.
RWrn＋4		
RWrn＋5	Monitor 2 data lower 16bit	The lower 16 bits of the data of the monitor code set to RWwn＋1 are set.
RWrn＋6	Monitor 2 data upper 16bit	The upper 16 bits of the data of the monitor code set to RWwn＋1 are set. A sign is set if there are no data in the upper 16 bits.
RWrn＋7		

16.2.3 Monitor codes

To demand 32-bit data when 2 stations are occupied, specify the lower 16-bit code No. Use any of the instruction codes 0101 to 011C to read the decimal point position (multiplying factor) of the status indication. Setting any instruction code No. that is not given in this section will set the error code (□□1□) to respond code (RWrn＋2). At this time, "0000" is set to RWrn, RWrn＋1, RWrn＋5 and RWrn＋6.

Code No.		Monitored item	Answer data (Servo amplifier → Programmable controller)	
1 station occupied	2 stations occupied		Data length	Unit
0000h	0000h			
0001h	0001h	Not used in indexer positioning operation.		
0002h				
0003h	0003h			
0004h				
0005h	0005h			
0006h				
0007h	0007h			
0008h	0008h	Not used in indexer positioning operation.		
0009h				
000Ah	000Ah	Feedback pulse value lower 16bit	16bit	[pulse]
000Bh		Feedback pulse value upper 16bit	16bit	[pulse]
000Ch				
000Dh				
000Eh	000Eh	Droop pulse value lower 16bit	16bit	[pulse]
000Fh		Droop pulse value upper 16bit	16bit	[pulse]
0010h	0010h			
0011h	0011h	Regenerative load factor	16bit	[%]
0012h	0012h	Effective load factor	16bit	[%]
0013h	0013h	Peak load factor	16bit	[%]
0014h	0014h	Instantaneously occurring torque	16bit	[%]
0015h	0015h	ABS counter	16bit	[rev]
0016h	0016h	Motor speed lower 16bit	16bit	×0.1[r/min]
0017h		Motor speed upper 16bit	16bit	×0.1[r/min]
0018h	0018h	Bus voltage	16bit	[V]
0019h	0019h	Not used in indexer positioning operation.		
001Ah				
001Bh	001Bh			
001Ch	001Ch	Within one-revolution position lower 16bit	16bit	[pulse]
001Dh		Within one-revolution position upper 16bit	16bit	[pulse]
001Eh	001Eh	Station No.	16bit	[No.]

16.2.4 Instruction codes (RWwn＋2 · RWwn＋3)

Refer to section 3.6.2 for the instruction code timing charts.

(1) Read instruction codes

The data read with instruction codes of 0000h to 0AFFh are stored to Read data (RWrn＋3).

Set the instruction code No. corresponding to the item to RWrn＋2. The codes and answer data are all 4-digit hexadecimal numbers.

Setting any instruction code No. that is not given in this section will set the error code (□□1□) to respond code (RWrn＋2). At this time, "0000" is set to Reading data (RWrn＋3).

Code No.	Item/Function	Reading data (RWrn+3) contents (Servo amplifier → Programmable controller)
0000h	Operation mode Reads the current operation mode.	0000: CC-Link operation mode 0001: Test operation mode
0002h	Travel multiplying factor Reads the multiplying factor of the position data in the point table set in parameter No.PA05.	 Travel multiplying factor 0300: ×1000 0200: ×100 0100: ×10 0000: ×1
0010h	Current alarm (warning) reading Reads the alarm No. or warning No. occurring currently.	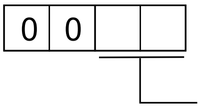 Occurring alarm No./warning No.
0020h	Alarm number in alarm history (most recent alarm)	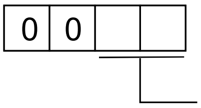 Alarm No. that occurred in past
0021h	Alarm number in alarm history (first recent alarm)	
0022h	Alarm number in alarm history (second recent alarm)	
0023h	Alarm number in alarm history (third recent alarm)	
0024h	Alarm number in alarm history (fourth recent alarm)	
0025h	Alarm number in alarm history (fifth recent alarm)	
0030h	Alarm occurrence time in alarm history (most recent alarm)	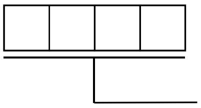 Occurrence time of alarm that occurred in past
0031h	Alarm occurrence time in alarm history (first recent alarm)	
0032h	Alarm occurrence time in alarm history (second recent alarm)	
0033h	Alarm occurrence time in alarm history (third recent alarm)	
0034h	Alarm occurrence time in alarm history (fourth recent alarm)	
0035h	Alarm occurrence time in alarm history (fifth recent alarm)	

<table>
<tr><th>Code No.</th><th>Item/Function</th><th>Reading data (RWrn+3) contents
(Servo amplifier → Programmable controller)</th></tr>
<tr><td>0040h</td><td>Input device status 0
Reads the statuses (OFF/ON) of the input devices.</td><td>Bit 0 to bit F indicate the OFF/ON statuses of the corresponding input devices.
bitF bit0
<table>
<tr><th>bit</th><th>Device</th><th>bit</th><th>Device</th></tr>
<tr><td>0</td><td>Servo-on</td><td>8</td><td>Monitor output execution demand</td></tr>
<tr><td>1</td><td>Start</td><td>9</td><td>Instruction code execution demand</td></tr>
<tr><td>2</td><td>Rotation direction specifying</td><td>A</td><td>Next station selection 1</td></tr>
<tr><td>3</td><td>Proximity dog</td><td>B</td><td>Next station selection 2</td></tr>
<tr><td>4</td><td>Forward rotation stroke end</td><td>C</td><td>Next station selection 3</td></tr>
<tr><td>5</td><td>Reverse rotation stroke end</td><td>D</td><td>Next station selection 4</td></tr>
<tr><td>6</td><td>Operation mode selection 1</td><td>E</td><td>Next station selection 5</td></tr>
<tr><td>7</td><td>Operation mode selection 2</td><td>F</td><td></td></tr>
</table>
</td></tr>
<tr><td>0041h</td><td>Input device status 1
Reads the statuses (OFF/ON) of the input devices.</td><td>Bit 0 to bit F indicate the OFF/ON statuses of the corresponding input devices.
bitF bit0
<table>
<tr><th>bit</th><th>Device</th><th>bit</th><th>Device</th></tr>
<tr><td>0</td><td>Position command execution demand</td><td>7</td><td>Proportion control</td></tr>
<tr><td>1</td><td>Speed command execution demand</td><td>8</td><td>Gain switching</td></tr>
<tr><td>2</td><td></td><td>9</td><td></td></tr>
<tr><td>3</td><td>Next station selection 6</td><td>A</td><td>Position/speed specifying system selection</td></tr>
<tr><td>4</td><td>Next station selection 7</td><td>B</td><td></td></tr>
<tr><td>5</td><td>Next station selection 8</td><td>C</td><td>Speed selection 1</td></tr>
<tr><td>6</td><td>Internal torque limit selection</td><td>D</td><td>Speed selection 2</td></tr>
<tr><td></td><td></td><td>E</td><td>Speed selection 3</td></tr>
<tr><td></td><td></td><td>F</td><td>For manufacturer setting</td></tr>
</table>
</td></tr>
<tr><td>0042h</td><td>Input device status 2
Reads the statuses (OFF/ON) of the input devices.</td><td>Bit 0 to bit F indicate the OFF/ON statuses of the corresponding input devices.
bitF bit0
<table>
<tr><th>bit</th><th>Device</th><th>bit</th><th>Device</th></tr>
<tr><td>0</td><td></td><td>8</td><td></td></tr>
<tr><td>1</td><td></td><td>9</td><td></td></tr>
<tr><td>2</td><td></td><td>A</td><td>Reset</td></tr>
<tr><td>3</td><td></td><td>B</td><td></td></tr>
<tr><td>4</td><td></td><td>C</td><td></td></tr>
<tr><td>5</td><td></td><td>D</td><td></td></tr>
<tr><td>6</td><td></td><td>E</td><td></td></tr>
<tr><td>7</td><td></td><td>F</td><td></td></tr>
</table>
</td></tr>
</table>

<table>
<tr><th>Code No.</th><th>Item/Function</th><th>Reading data (RWrn+3) contents
(Servo amplifier → Programmable controller)</th></tr>
<tr><td>0050h</td><td>Output device status 0
Reads the statuses (OFF/ON) of the Output devices.</td><td>Bit 0 to bit F indicate the OFF/ON statuses of the corresponding output devices.
bitF bit0
<table><tr><td></td><td></td><td></td><td></td><td></td><td></td><td></td><td></td><td></td><td></td><td></td><td></td><td></td><td></td><td></td><td></td></tr></table>
<table>
<tr><th>bit</th><th>Device</th></tr>
<tr><td>0</td><td>Ready</td></tr>
<tr><td>1</td><td>In position</td></tr>
<tr><td>2</td><td>Rough match</td></tr>
<tr><td>3</td><td>Home position return completion</td></tr>
<tr><td>4</td><td>Limiting torque</td></tr>
<tr><td>5</td><td></td></tr>
<tr><td>6</td><td>Electromagnetic brake interlock</td></tr>
<tr><td>7</td><td></td></tr>
</table>
<table>
<tr><th>bit</th><th>Device</th></tr>
<tr><td>8</td><td>Monitoring</td></tr>
<tr><td>9</td><td>Instruction code execution completion</td></tr>
<tr><td>A</td><td>Warning</td></tr>
<tr><td>B</td><td>Battery warning</td></tr>
<tr><td>C</td><td>Movement completion</td></tr>
<tr><td>D</td><td>Dynamic brake interlock</td></tr>
<tr><td>E</td><td></td></tr>
<tr><td>F</td><td></td></tr>
</table></td></tr>
<tr><td>0051h</td><td>Output device status 1
Reads the statuses (OFF/ON) of the Output devices.</td><td>Bit 0 to bit F indicate the OFF/ON statuses of the corresponding output devices.
bitF bit0
<table><tr><td></td><td></td><td></td><td></td><td></td><td></td><td></td><td></td><td></td><td></td><td></td><td></td><td></td><td></td><td></td><td></td></tr></table>
<table>
<tr><th>bit</th><th>Device</th></tr>
<tr><td>0</td><td>Position command execution completion</td></tr>
<tr><td>1</td><td>Speed command execution completion</td></tr>
<tr><td>2</td><td>Station output 1</td></tr>
<tr><td>3</td><td>Station output 2</td></tr>
<tr><td>4</td><td>Station output 3</td></tr>
<tr><td>5</td><td>Station output 4</td></tr>
<tr><td>6</td><td>Station output 5</td></tr>
</table>
<table>
<tr><th>bit</th><th>Device</th></tr>
<tr><td>7</td><td>Station output 6</td></tr>
<tr><td>8</td><td>Station output 7</td></tr>
<tr><td>9</td><td>Station output 8</td></tr>
<tr><td>A</td><td></td></tr>
<tr><td>B</td><td></td></tr>
<tr><td>C</td><td></td></tr>
<tr><td>D</td><td></td></tr>
<tr><td>E</td><td></td></tr>
<tr><td>F</td><td>For manufacturer setting</td></tr>
</table></td></tr>
<tr><td>0052h</td><td>Output device status 2
Reads the statuses (OFF/ON) of the Output devices.</td><td>Bit 0 to bit F indicate the OFF/ON statuses of the corresponding output devices.
bitF bit0
<table><tr><td></td><td></td><td></td><td></td><td></td><td></td><td></td><td></td><td></td><td></td><td></td><td></td><td></td><td></td><td></td><td></td></tr></table>
<table>
<tr><th>bit</th><th>Device</th></tr>
<tr><td>0</td><td></td></tr>
<tr><td>1</td><td></td></tr>
<tr><td>2</td><td></td></tr>
<tr><td>3</td><td></td></tr>
<tr><td>4</td><td></td></tr>
<tr><td>5</td><td></td></tr>
<tr><td>6</td><td></td></tr>
<tr><td>7</td><td></td></tr>
<tr><td>8</td><td></td></tr>
</table>
<table>
<tr><th>bit</th><th>Device</th></tr>
<tr><td>9</td><td></td></tr>
<tr><td>A</td><td>Trouble</td></tr>
<tr><td>B</td><td>Remote station communication ready</td></tr>
<tr><td>C</td><td></td></tr>
<tr><td>D</td><td></td></tr>
<tr><td>E</td><td></td></tr>
<tr><td>F</td><td></td></tr>
</table></td></tr>
</table>

Code No.	Item/Function	Reading data (RWrn+3) contents (Servo amplifier → Programmable controller)
0081h	Energization time Reads the energization time from shipment.	Returns the energization time [h]. 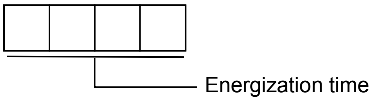 Energization time
0082h	Power ON frequency Reads the number of power-on times from shipment.	Returns the number of power-on times. 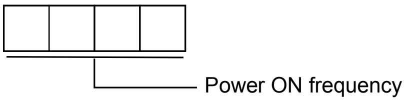 Power ON frequency
00A0h	Ratio of load inertia moment Reads the estimated ratio of load inertia moment to servo motor shaft inertia moment.	Return unit [times]. 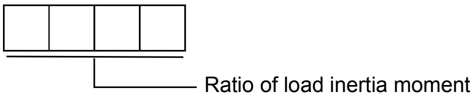 Ratio of load inertia moment
00B0h	Home position within-1-revolution position lower 16bit (CYC0) Reads the lower 16 bits of the cycle counter value of the absolute home position.	Return unit [pulses]. 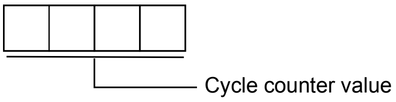 Cycle counter value
00B1h	Home position within-1-revolution position upper 16bit Reads the upper 16 bits of the cycle counter value of the absolute home position.	Return unit [pulses]. 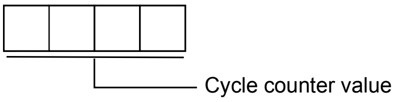 Cycle counter value
00B2h	Home position Multi-revolution data (ABS0) Multi-revolution counter value of absolute home position reading.	Return unit [rev]. 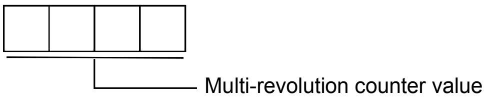 Multi-revolution counter value
00C0h	Error parameter No./Point data No. reading Reads the parameter No./point table No. in error.	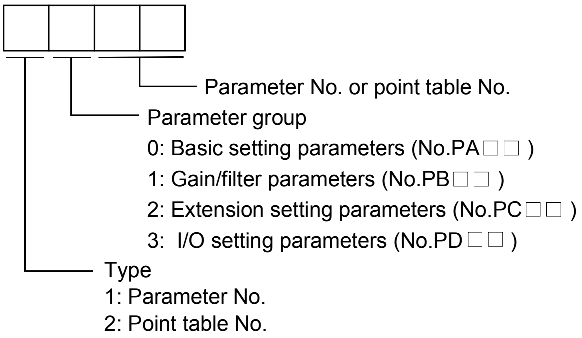 Parameter No. or point table No. Parameter group 0: Basic setting parameters (No.PA□□) 1: Gain/filter parameters (No.PB□□) 2: Extension setting parameters (No.PC□□) 3: I/O setting parameters (No.PD□□) Type 1: Parameter No. 2: Point table No.
0100h to 011Dh	Monitor multiplying factor Reads the multiplying factor of the data to be read with the monitor code. The instruction codes 0100 to 011D correspond to the monitor codes 0000 to 001D. 0000 applies to the instruction code that does not correspond to the monitor code.	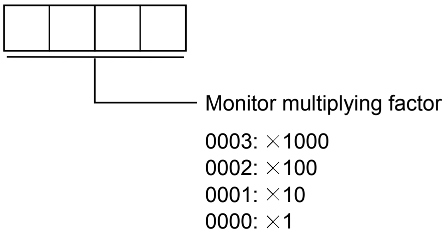 Monitor multiplying factor 0003: ×1000 0002: ×100 0001: ×10 0000: ×1

Code No.	Item/Function	Reading data (RWrn+3) contents (Servo amplifier → Programmable controller)
0200h	Parameter group reading Reads the parameter group to be read with code No.8200h to be written.	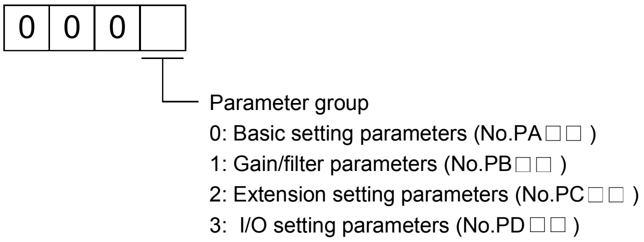 0 0 0 □ Parameter group 0: Basic setting parameters (No.PA□□) 1: Gain/filter parameters (No.PB□□) 2: Extension setting parameters (No.PC□□) 3: I/O setting parameters (No.PD□□)
0201h to 02FFh	Parameter data reading Reads the set value of each No. of the parameter group read with code No.0200h. The decimal value converted from the 2 lower digits of the code No. corresponds to the parameter No. If the instruction code is set outside the range set in parameter No.PA19, an error code is returned and the data cannot be read.	The value set in the parameter No. corresponding to the requested group name is stored.
0301h to 03FFh	Data form of parameter Reads the data format of each No. of the parameter group read with code No.0200h. The decimal value converted from the 2 lower digits of the code No. corresponds to the parameter No. If the instruction code is set outside the range set in parameter No.PA19, an error code is returned and the data cannot be read.	The value set in the parameter No. corresponding to the requested group name is stored. 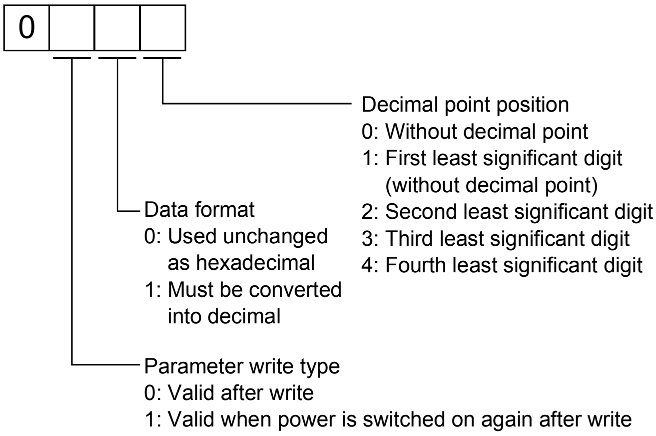 0 □ □ □ Decimal point position 0: Without decimal point 1: First least significant digit (without decimal point) 2: Second least significant digit 3: Third least significant digit 4: Fourth least significant digit Data format 0: Used unchanged as hexadecimal 1: Must be converted into decimal Parameter write type 0: Valid after write 1: Valid when power is switched on again after write
0601h to 06FFh	Servo motor speed of point table No.1 to 255 The decimal value converted from the 2 lower digits of the code No. corresponds to the point table No.	The servo motor speed set to the requested point table No. is returned. 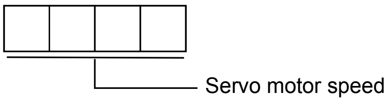 Servo motor speed
0701h to 07FFh	Acceleration time constant of point table No.1 to 255 The decimal value converted from the 2 lower digits of the code No. corresponds to the point table No.	The acceleration time constant set to the requested point table No. is returned.
0801h to 08FFh	Deceleration time constant of point table No.1 to 255 The decimal value converted from the 2 lower digits of the code No. corresponds to the point table No.	The deceleration time constant set to the requested point table No. is returned.

(2) Write instruction codes

Set the data, which was requested to be written with the instruction code 8010h to 91FFh.

Set the instruction code No. corresponding to the item to Instruction code (RWwn＋2) and the written data to Writing data (RWwn＋3). The codes and answer data are all 4-digit hexadecimal numbers.

When the instruction code which has not been described in this section is set, the error code (□□1□) is stored in respond code (RWrn＋2).

Code No.	Item	Writing data (RWwn+3) contents (Programmable controller → Servo amplifier)
8010h	Alarm reset command Deactivates the alarm that occurred.	1EA5
8101h	Feedback pulse value display data is clear Resets the display data of the status indication "feedback pulse value" to 0.	1EA5
8200h	Parameter group write command Writes the group of parameters that are written to with codes No.8201h to 82FFh and 8301h to 83FFh. Writes the group of parameters that are read with codes No.0201h to 02FFh and 0301h to 03FFh.	0 0 0 □ Parameter group 0: Basic setting parameters (No.PA□□) 1: Gain/filter parameters (No.PB□□) 2: Extension setting parameters (No.PC□□) 3: I/O setting parameters (No.PD□□)
8201h to 82FFh	Data RAM instruction of parameter Writes the set value of each No. of the parameter group written by code No.8200h to RAM. These values are cleared when power is switched off. The decimal value converted from the 2 lower digits of the code No. corresponds to the parameter No. An error code is returned if an instruction code outside the range set in parameter No. PA19 or a value outside the setting range of the corresponding parameter is written.	Convert the decimal values into hexadecimal before setting.
8301h to 83FFh	Data EEP-ROM instruction of parameter Writes the set value of each No. of the parameter group written with code No.8200h to EEP-ROM. Written to EEP-ROM, these values are held if power is switched off. The decimal value converted from the 2 lower digits of the code No. corresponds to the parameter No. An error code is returned if an instruction code outside the range set in parameter No.PA19 or a value outside the setting range of the corresponding parameter is written.	Convert the decimal values into hexadecimal before setting.
8601h to 86FFh	Motor speed of point table Writes the motor speeds of point table No.1 to 255 to RAM. These values are cleared when power is switched off. The decimal value converted from the 2 lower digits of the code No. corresponds to the point table No.	Convert the values into hexadecimal before setting.

Code No.	Item	Writing data (RWwn+3) contents (Programmable controller → Servo amplifier)
8701h to 87FFh	Acceleration time constant data RAM command of point table Writes the acceleration time constants of point table No.1 to 255 to RAM. These values are cleared when power is switched off. The decimal value converted from the 2 lower digits of the code No. corresponds to the point table No.	Convert the values into hexadecimal before setting.
8801h to 88FFh	Deceleration time constant data RAM command of point table Writes the deceleration time constants of point table No.1 to 255 to RAM. These values are cleared when power is switched off. The decimal value converted from the 2 lower digits of the code No. corresponds to the point table No.	Convert the values into hexadecimal before setting.
8D01h to 8DFFh	Servo motor speed data EEP-ROM command of point table Writes the servo motor speeds of point table No.1 to 255 to EEP-ROM. Written to EEP-ROM, these values are held if power is switched off. The decimal value converted from the 2 lower digits of the code No. corresponds to the point table No.	Convert the values into hexadecimal before setting.
8E01h to 8EFFh	Acceleration time constant data EEP-ROM command of point table Writes the acceleration time constants of point table No.1 to 255 to EEP-ROM. Written to EEP-ROM, these values are held if power is switched off. The decimal value converted from the 2 lower digits of the code No. corresponds to the point table No.	Convert the values into hexadecimal before setting.
8F01h to 8FFFh	Deceleration time constant data EEP-ROM command of point table Writes the deceleration time constants of point table No.1 to 255 to EEP-ROM. Written to EEP-ROM, these values are held if power is switched off. The decimal value converted from the 2 lower digits of the code No. corresponds to the point table No.	Convert the values into hexadecimal before setting.

16.2.5 Respond codes (RWrn＋2)

If any of the monitor codes, instruction codes, Next station, Point table Nos./Speed command data set to the remote register is outside the setting range, the corresponding error code is set to respond code (RWrn＋2). "0000" is set if they are normal.

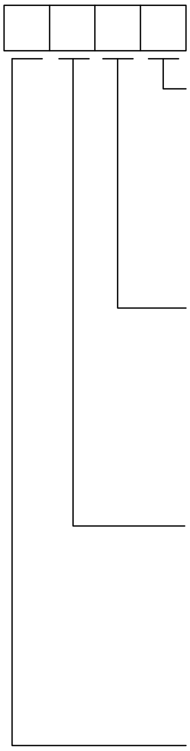

Error related to monitor code 1/monitor code 2

Code No.	Error detail	Details
0	Normal answer	Successfully executed.
1	Code error	An incorrect code No. is specified.
2		
3		

Error related to instruction code/writing code

Code No.	Error detail	Details
0	Normal answer	Successfully executed.
1	Code error	An incorrect code No. is specified.
2	Parameter selection error	Unavailable parameter No. is specified.
3	Out of writing data range	A value out of the setting range is set.

Error related to next station

Code No.	Error detail	Details
0	Normal answer	Successfully executed.
1		
2		
3	Out of writing data range	A value out of the setting range is set.

Error related to point table No./speed command data

Code No.	Error detail	Details
0	Normal answer	Successfully executed.
1		
2		
3	Out of writing data range	A value out of the setting range is set.

16.3 Signal

16.3.1 Signal (device) explanation

> **POINT**
>
> - In the indexer positioning operation, devices assigned to the CN6 connector cannot be changed.

(1) I/O device

(a) Input device

> **POINT**
>
> - Devices assigned to CN6 connector and RY of CC-Link cannot be used simultaneously.

<table>
<tr><th>Device</th><th>Symbol</th><th>Connector pin No.</th><th>Functions/Applications</th></tr>
<tr><td>Forced stop</td><td>EMG</td><td>CN6-1</td><td>When EMG is turned off, the operation will be stopped forcibly. At this time, the servo turns off, and the dynamic brake operates to stop the servo motor suddenly.
The forced stop will be reset when EMG is turned on.</td></tr>
<tr><td>Proximity dog</td><td>DOG</td><td>CN6-2</td><td>When DOG is turned OFF, the proximity dog is detected. The polarity of dog detection can be changed using parameter No.PD16.
<table>
<tr><th>Parameter No.PD16</th><th>Proximity dog (DOG) detection polarity</th></tr>
<tr><td>□0□□ (initial value)</td><td>OFF</td></tr>
<tr><td>□1□□</td><td>ON</td></tr>
</table>
</td></tr>
<tr><td>Forward rotation stroke end</td><td>LSP</td><td>CN6-3</td><td rowspan="2">When starting operation, turn LSP/LSN to ON. Turning it to OFF causes a sudden stop, resulting in servo lock. A stopping method can be changed in parameter No.PD20.
When not using the forward/reverse rotation stroke end, set "Automatic ON" in parameter No.PD01.
<table>
<tr><th colspan="2">(Note) Input signal</th><th colspan="2">Operation</th></tr>
<tr><th>LSP</th><th>LSN</th><th>CCW direction</th><th>CW direction</th></tr>
<tr><td>1</td><td>1</td><td>○</td><td>○</td></tr>
<tr><td>0</td><td>1</td><td></td><td>○</td></tr>
<tr><td>1</td><td>0</td><td>○</td><td></td></tr>
<tr><td>0</td><td>0</td><td></td><td></td></tr>
</table>
Note. 0: OFF
1: ON
</td></tr>
<tr><td>Reverse rotation stroke end</td><td>LSN</td><td>CN6-4</td></tr>
</table>

(b) Output device

POINT

- Output devices assigned to the CN6 connector pins can be used with RX of CC-Link.

Device	Symbol	Connector pin No.	Functions/Applications
Ready	RD	CN6-14	Refer to section 16.2.2 (2) for details of the device.
Trouble	ALM	CN6-15	ALM turns off when the power is switched off or the protective circuit is activated to shut off the base circuit. Without alarm occurring, ALM turns on in about 1.5s after power-on. The logic is opposite to RX(n＋1)A or RX(n＋3)A.
Home position return completion	ZP	CN6-16	Refer to section 16.2.2 (2) for details of the device.

(2) Input signals

Device	Symbol	Connector pin No.	Functions/Applications
Manual pulse generator	PP	CN6-6	Not used in indexer positioning operation.
	NP	CN6-19	

(3) Output signals

Refer to section 4.8.2 for the output interfaces (symbols in the I/O Division field in the table) of the corresponding connector pins.

Device	Symbol	Connector pin No.	Functions/Applications	I/O division
Encoder A-phase pulse (differential line driver)	LA LAR	CN6-11 CN6-24	Outputs pulses per servo motor revolution set in parameter No.PA15 in the differential line driver system. In CCW rotation of the servo motor, the encoder B-phase pulse lags the encoder A-phase pulse by a phase angle of $\pi/2$. The relationships between rotation direction and phase difference of the A- and B-phase pulses can be changed using parameter No.PC19	DO-2
Encoder B-phase pulse (differential line driver)	LB LBR	CN6-12 CN6-25		
Encoder Z-phase pulse (differential line driver)	LZ LZR	CN6-13 CN6-26	Outputs the zero-point signal of the encoder in the differential line driver system. One pulse is output per servo motor revolution. This signal turns on when the zero-point position is reached. (Negative logic) The minimum pulse width is about 400μs. For home position return using this pulse, set the creep speed to 100r/min. or less.	DO-2

(4) Power supply

Signal	Symbol	Connector pin No.	Functions/Applications	I/O division
Digital I/F power supply input	DICOM	CN6-5	Used to input 24VDC (24VDC±10% 150mA) for I/O interface. The power supply capacity changes depending on the number of I/O interface points to be used. Connect the plus of 24VDC terminal external power supply for the sink interface.	
Digital I/F common	DOCOM	CN6-17	Common terminal for input signals such as DOG and EMG. Pins are connected internally. Separated from LG. Connect the plus of 24VDC terminal external power supply for the source interface.	
MR-HDP01 open collector power input	OPC	CN6-18	Not used in indexer positioning operation.	
Control common	LG	CN6-23	Common terminal for the differential line driver of the encoder pulses (LA・LAR・LB・LBR・LZ・LZR).	
Shield	SD	Plate	Connect the external conductor of the shield cable.	

16.3.2 Detailed description of signals (devices)

(1) Forward rotation start ･ reverse rotation start ･ temporary stop/restart

(a) A start (RYn1) should make the sequence which can be used after the main circuit has been established. These signals are invalid if it is switched on before the main circuit is established. Normally, it is interlocked with the ready signal (RD).

(b) A start in the servo amplifier is made when a start (RYn1) changes from OFF to ON. The delay time of the servo amplifier's internal processing is max. 3ms. The delay time of other devices is max. 10ms.

(c) When a programmable controller is used, the ON time of a start (RYn1), should be 6ms or longer to prevent a malfunction.

(d) During operation, the start (RYn1) is not accepted. The next operation should always be started after the rough match (RXn2) is output with the rough match output range set to “0” or after the movement completion (RXnC) is output.

(2) Movement completion · rough match · in position

POINT

- If an alarm cause, etc. are removed and servo-on occurs after a stop is made by servo-off, alarm occurrence or Forced stop (EMG) ON during automatic operation, Movement completion (MEND), Rough-match, (CPO) and In position (INP) are turned on. To resume operation, confirm the current position and the selected point table No. for preventing unexpected operation.

(a) Movement completion

The following timing charts show the output timing relationships between the position command generated in the servo amplifier and the movement completion (RYnC). This timing can be changed using parameter No.PA10 (in-position range). RYnC turns ON in the servo-on status.

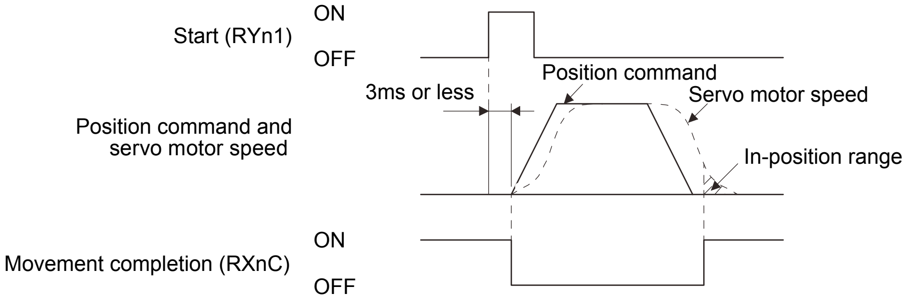

When parameter No.PA10 is small

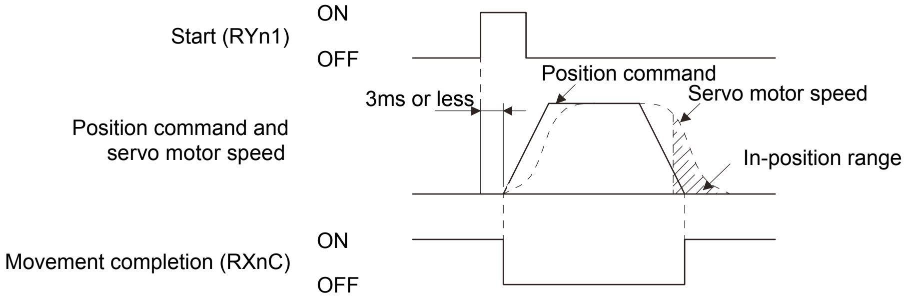

When parameter No.PA10 is large

(b) Rough match

The following timing charts show the relationships between the signal and the position command generated in the servo amplifier. This timing can be changed using parameter No.PC11 (rough match output range). RXn2 turns ON in the servo-on status.

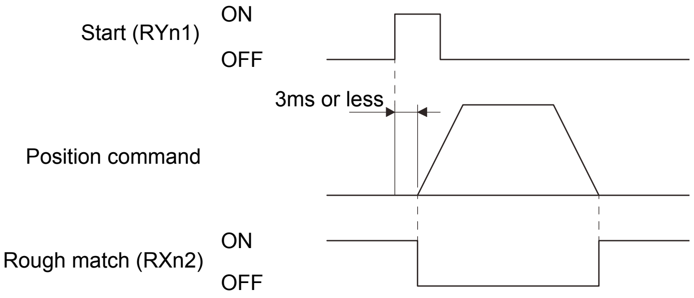

When "0" is set in parameter No.PC11

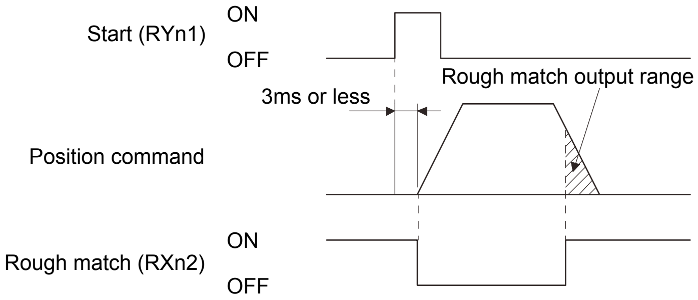

When more than "0" is set in parameter No.PC11

(c) In position

The following timing chart shows the relationship between the signal and the feedback pulse of the servo motor. This timing can be changed using parameter No.PA10 (in-position range). turns on RYn1 in the servo-on status.

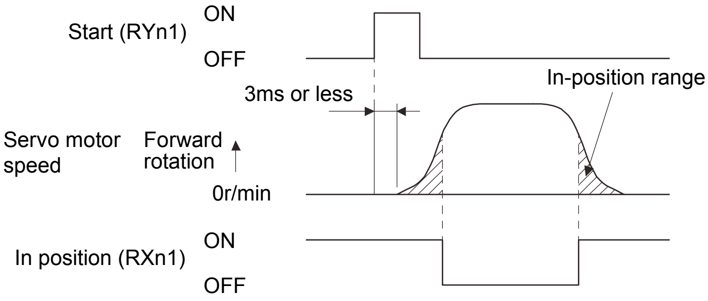

When positioning operation is performed once

(3) Torque limit

⚠CAUTION

- If the torque limit is canceled during servo lock, the servo motor may suddenly rotate according to position deviation in respect to the command position.

POINT

- In the indexer positioning operation, the torque limit 2 becomes automatically effective depending on the operation status.

(a) Torque limit and torque

By setting parameter No.PA11 (forward rotation torque limit) or parameter No.PA12 (reverse rotation torque limit), torque is always limited to the maximum value during operation. A relationship between the limit value and servo motor torque is shown below.

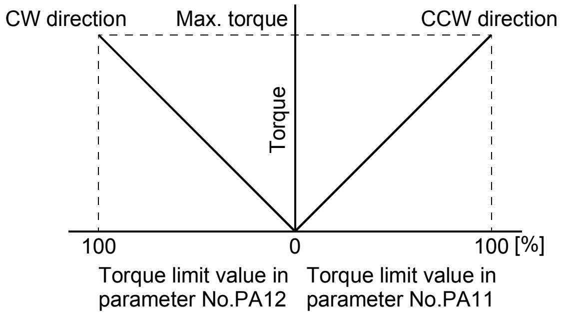

(b) Torque limit value selection

As shown below, the forward rotation torque limit (parameter No.PA11), reverse rotation torque limit (parameter No.PA12) or internal torque limit 2 (parameter No.PC35) can be chosen using the external torque limit selection (RY(n＋2)6).

(Note) RY(n＋2) 6	Limit value status		Torque limit to be enabled	
			CCW driving/CW regeneration	CW driving/CCW regeneration
0			Parameter No.PA11	Parameter No.PA12
1	Parameter No.PC35	＞	Parameter No.PA11 Parameter No.PA12	Parameter No.PA11	Parameter No.PA12
	Parameter No.PC35	＜	Parameter No.PA11 Parameter No.PA12	Parameter No.PC35	Parameter No.PC35

Note. 0: OFF
1: ON

(c) Limiting torque (RXn4)

RXn4 turns on when the servo motor torque reaches the torque limited.

16.4 Switching power on for the first time

⚠ WARNING	· Do not operate the switches with wet hands. You may get an electric shock.

⚠ CAUTION	· Before starting operation, check the parameters. Some machines may perform unexpected operation. · Take safety measures, e.g. provide covers, to prevent accidental contact of hands and parts (cables, etc.) with the servo amplifier heat sink, regenerative resistor, servo motor, etc. since they may be hot while power is on or for some time after power-off. Their temperatures may be high and you may get burnt or parts may be damaged. · During operation, never touch the rotating parts of the servo motor. Doing so can cause injury.

When switching power on for the first time, follow this section to make a startup.

16.4.1 Startup procedure

Wiring check	Check whether the servo amplifier and servo motor are wired correctly using visual inspection, DO forced output function (Section 7.7.4, 8.5.7 (4)), etc. (Refer to section 16.4.3.)
↓ Surrounding environment check	Check the surrounding environment of the servo amplifier and servo motor. (Refer to section 16.4.3.)
↓ Parameter setting	Set the parameters as necessary, such as the used control mode and regenerative option selection with the parameter unit or MR Configurator. (Refer to section 16.11.)
↓ Test operation of servo motor alone in test operation mode	For the test operation, with the servo motor disconnected from the machine and operated at the speed as low as possible, and check whether the servo motor rotates correctly. (Refer to sections 7.7 and 8.5.7.)
↓ Test operation of servo motor alone by commands	For the test operations with the servo motor disconnected from the machine and operated at the speed as low as possible, and check whether the servo motor rotates correctly.
↓ Test operation with servo motor and machine connected	Connect the servo motor with the machine, give operation commands from the controller, and check machine motions.
↓ Gain adjustment	Make gain adjustment to optimize the machine motions. (Refer to chapter 9.)
↓ Actual operation	
↓ Stop	Stop giving commands and stop operation.

16.4.2 Wiring check

(1) Power supply system wiring

Before switching on the main circuit and control circuit power supplies, check the following items.

(a) Power supply system wiring

The power supplied to the power input terminals (L_1, L_2, L_3, L_{11}, L_{21}) of the servo amplifier should satisfy the defined specifications. (Refer to section 1.2.)

(b) Connection of servo amplifier and servo motor

1) The servo motor power supply output (U, V, W) of the servo amplifier match in phase with the power output terminals (U, V, W) of the servo motor.

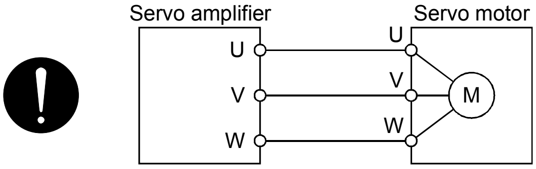

2) The power supplied to the servo amplifier should not be connected to the servo motor power supply output (U, V, W). To do so will fail the connected servo amplifier and servo motor.

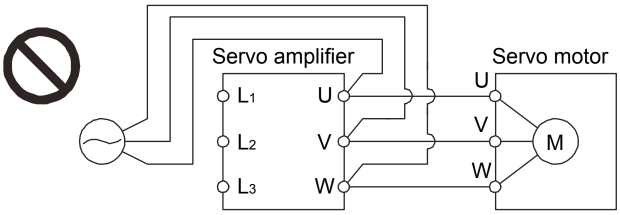

3) The earth terminal of the servo motor is connected to the PE terminal of the servo amplifier.

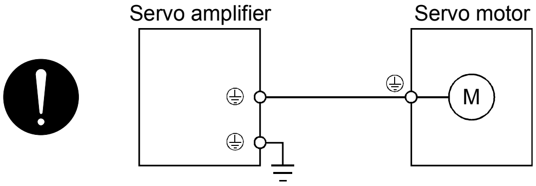

4) P_1-P_2 (For 11kW or more, P_1-P) should be connected.

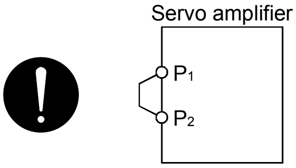

(c) When option and auxiliary equipment are used

1) When regenerative option is used under 3.5kW for 200V class and 2kW for 400V class

- The lead between P terminal and D terminal of CNP2 connector should not be connected.
- The generative brake option should be connected to P terminal and C terminal.
- A twisted cable should be used. (Refer to section 14.2.)

2) When regenerative option is used over 5kW for 200V class and 3.5kW for 400V class
   - The lead of built-in regenerative resistor connected to P terminal and C terminal of TE1 terminal block should not be connected.
   - The generative brake option should be connected to P terminal and C terminal.
   - A twisted cable should be used. (Refer to section 14.2.)

3) When brake unit and power regenerative converter are used over 5kW
   - The lead of built-in regenerative resistor connected to P terminal and C terminal of TE1 terminal block should not be connected.
   - Brake unit, power regenerative converter or power regeneration common converter should be connected to P terminal and N terminal. (Refer to section 14.3 to 14.5.)
   - A twisted cable should be used when wiring is over 5m and under 10m to use the brake unit. (Refer to section 14.3.)

4) The power factor improving DC reactor should be connected P_1 and P_2 (For 11kW or more, P_1 and P). (Refer to section 14.11.)

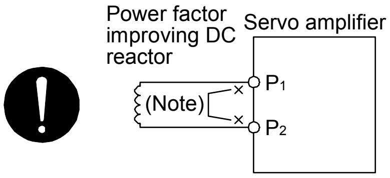

Note. Always disconnect P_1 and P_2 (For 11kW or more, P_1 and P).

(2) I/O signal wiring

(a) The I/O signals should be connected correctly.
Use DO forced output to forcibly turn on/off the pins of the CN6 connector. This function can be used to perform a wiring check. (Refer to section 7.7.4.) In this case, switch on the control circuit power supply only.

(b) 24VDC or higher voltage is not applied to the pins of connectors CN6.

(c) SD and DOCOM of connector CN6 is not shorted.

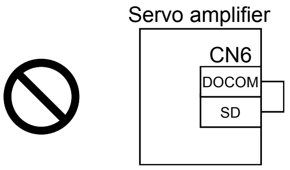

16.4.3 Surrounding environment

(1) Cable routing

(a) The wiring cables are free from excessive force.

(b) The encoder cable should not be used in excess of its flex life. (Refer to section 13.4.)

(c) The connector part of the servo motor should not be strained.

(2) Environment

Signal cables and power cables are not shorted by wire offcuts, metallic dust or the like.

16.5 Startup

16.5.1 Power on and off procedures

(1) Power-on

Switch power on in the following procedure. Always follow this procedure at power-on.

1) Switch off the servo-on (RYn0).

2) Make sure that the start (RYn1) is off.

3) Switch on the main circuit power supply and control circuit power supply.
When main circuit power/control circuit power is switched on, the servo amplifier display shows "b01" (if the servo amplifier has the station number of 1).

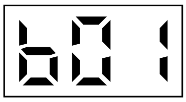

In the absolute position detection system, first power-on results in the absolute position lost (A25) alarm and the servo system cannot be switched on.
The alarm can be deactivated then switching power off once and on again.
Also in the absolute position detection system, if power is switched on at the servo motor speed of 3000r/min or higher, position mismatch may occur due to external force or the like. Power must therefore be switched on when the servo motor is at a stop.

(2) Power-off

1) Make sure that the start (RYn1) is off.

2) Switch off the Servo-on (RYn0).

3) Switch off the main circuit power supply and control circuit power supply.

16.5.2 Stop

In any of the following statuses, the servo amplifier interrupts and stops the operation of the servo motor.
Refer to section 4.11 for the servo motor equipped with an electromagnetic brake.

(a) Servo-on (RYn0) OFF
The base circuit is shut off and the servo motor coasts.

(b) Alarm occurrence
When an alarm occurs, the base circuit is shut off and the dynamic brake is operated to bring the servo motor to a sudden stop.

(c) Forced stop (EMG) OFF
The base circuit is shut off and the dynamic brake is operated to bring the servo motor to a sudden stop. The servo forced stop warning (AE6) occurs.

(d) Forward rotation stroke end (LSP), reverse rotation stroke end (LSN) OFF
The droop pulse value is erased and the servo motor is stopped and servo-locked. It can be run in the opposite direction.

16.5.3 Test operation

Before starting actual operation, perform test operation to make sure that the machine operates normally.
Refer to section 16.5.1 for the power on and off methods of the servo amplifier.

Test operation of servo motor alone in JOG operation of test operation mode

In this step, confirm that the servo amplifier and servo motor operate normally.
With the servo motor disconnected from the machine, use the test operation mode and check whether the servo motor correctly rotates at the slowest speed. Refer to section 7.7 and 8.5.7 for the test operation mode.

Test operation of servo motor alone by commands

In this step, confirm that the servo motor correctly rotates at the slowest speed under the commands from the controller. Make sure that the servo motor rotates in the following procedure.

1) Switch on the Forced stop (EMG) and Servo-on (RYn0). When the servo amplifier is put in a servo-on status, the Ready (RD) switches on.

2) Switch on the Forward rotation stroke end (LSP) or Reverse rotation stroke end (LSN).

3) When the point table is designated from the controller to switch on the start (RYn1) the servo motor starts rotating. Give a low speed command at first and check the rotation direction, etc. of the servo motor. If the servo motor does not operate in the intended direction, check the input signal.

Test operation with servo motor and machine connected

In this step, connect the servo motor with the machine and confirm that the machine operates normally under the commands from the controller.
Make sure that the servo motor rotates in the following procedure.

1) Switch on the Forced stop (EMG) and Servo-on (RYn0). When the servo amplifier is put in a servo-on status, the Ready (RD) switches on.

2) Switch on the Forward rotation stroke end (LSP) or Reverse rotation stroke end (LSN).

3) When the point table is specified from the controller and the start (RYn1) is turned ON, the servo motor starts rotating. Give a low speed command at first and check the operation direction, etc. of the machine. If the machine does not operate in the intended direction, check the input signal. In the status display, check for any problems of the servo motor speed, load ratio, etc.

4) Then, check automatic operation with the program of the controller.

16.5.4 Parameter setting

POINT

- The encoder cable MR-EKCBL□M-L/H for the HF-MP series · HF-KP series servo motor requires the parameter No.PC22 setting to be changed depending on its length. Check whether the parameter is set correctly. If it is not set correctly, the encoder error 1 (A16) will occur at power-on.

Encoder cable	Parameter No.PC22 setting
MR-EKCBL20M-L/H	0□□□ (initial value)
MR-EKCBL30M-H	1□□□
MR-EKCBL40M-H	
MR-EKCBL50M-H	

The servo amplifier can be used by merely changing the basic setting parameters (No.PA□□) mainly.
As necessary, set the gain filter parameters (No.PB□□), extension setting parameters (No.PC□□) and I/O setting parameters (No.PD□□).

Parameter group	Main description
Basic setting parameter (No.PA□□)	Set the basic setting parameters first. Generally, operation can be performed by merely setting this parameter group. In this parameter group, set the following items. Control mode selection Regenerative option selection Absolute position detection system selection Servo motor speed setting unit selection Electronic gear setting Auto tuning selection and adjustment In-position range setting Torque limit setting Station No. direction selection Encoder output pulse setting
Gain filter parameter (No.PB□□)	If satisfactory operation cannot be achieved by the gain adjustment made by auto tuning, execute in-depth gain adjustment using this parameter group. This parameter group must also be set when the gain switching function is used.
Extension setting parameter (No.PC□□)	This parameter group is unique to MR-J3-□T servo amplifier.
I/O setting parameter (No.PD□□)	Set the stopping method of the stroke end (LSP and LSN), torque limit delay time and others.

16.5.5 Point table setting

Set necessary items to the point table before starting operation. The following table indicates the items that must be set.

Name	Description
Position data	Not used in indexer positioning operation. Do not change this value by any means.
Servo motor speed	Set the command speed of the servo motor for execution of positioning. The servo motor speed may not reach to the set speed depending on the number of stations for indexing.
Acceleration time constant	Set the acceleration time constant.
Deceleration time constant	Set the deceleration time constant.
Dwell	Not used in indexer positioning operation. Do not change this value by any means.
Auxiliary function	Not used in indexer positioning operation. Do not change this value by any means.

16.5.6 Actual operation

Start actual operation after confirmation of normal operation by test operation and completion of the corresponding parameter settings. Perform a home position return as necessary.

16.6 Servo amplifier display

On the servo amplifier display (three-digit, seven-segment display), check the status of communication with the CC-Link controller at power-on, check the station number, and diagnose a fault at occurrence of an alarm.

(1) Display sequence

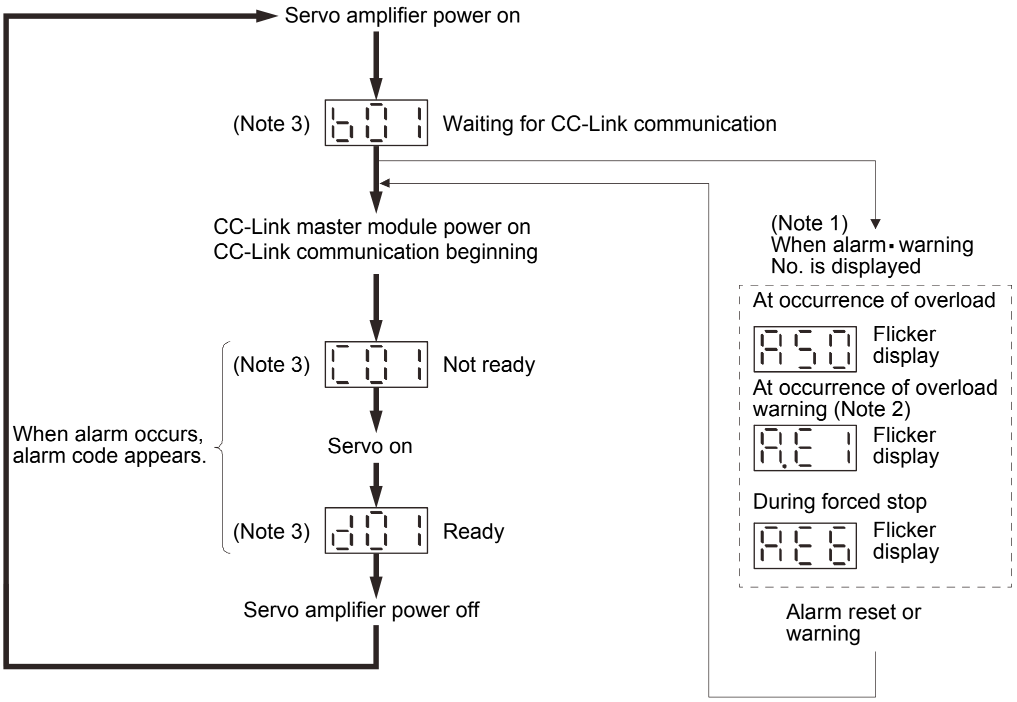

Note 1. Only alarm and warning No. are displayed, but no station No. is displayed.

2. If warning other than AE6 occurs during the servo on, flickering the second place of decimal point indicates that it is during the servo on.
3. The right-hand segments of b01, c02 and d16 indicate the axis number.
(Below example indicates Station No.1)

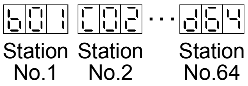

(2) Indication list

Indication	Status	Description
b##	Waiting for CC-Link communication	・Power of the CC-Link master module was switched on at the condition that the power of CC-Link master module is OFF. ・The CC-Link master module is faulty.
(Note 1) d##	Ready	The servo was switched on after completion of initialization and the servo amplifier is ready to operate.
(Note 1) C##	Not ready	The servo amplifier is being initialized or an alarm has occurred.
(Note 2) A＊＊	Alarm・Warning	The alarm No./warning No. that occurred is displayed. (Refer to section 16.12.4.)
888	CPU error	CPU watchdog error has occurred.
(Note 3) d00. C00.	(Note 3) Test operation mode	JOG operation・positioning operation・programmed operation・DO forced output
(Note 1) d##. C##.		Motor-less operation

Note 1. ## denotes any of numerals 00 to 16 and what it means is listed below.

##	Description
00	Set to the test operation mode.
01	Station number 1
02	Station number 2
03	Station number 3
: :	: :
62	Station number 62
63	Station number 63
64	Station number 64

2. ＊＊ indicates the warning/alarm No.
3. Requires MR Configurator or MR-PRU03 parameter module.

16.7 Automatic operation mode

POINT

- In the absolute position detection system, the following restriction condition applies for the number of gears on machine-side (parameter No.PA06 CMX) and servo motor speed (N).
  - When CMX ≦ 2000, N ＜ 3076.7 r/min
  - When CMX ＞ 2000, N ＜ 3276.7–CMX r/min
- When the servo motor is operated at servo motor speed higher than the limit value, the absolute position counter warning (AE3) occurs.

16.7.1 What is automatic operation mode?

(1) Concept of indexer

Select the station, which is dividing the circumference (360 degrees) of the machine side into up to 255, using 8-bit device of the next station selection 1 to 8 (RYnA to RYnE, and RY(n＋2)3 to RY(n＋2)5), and execute positioning.

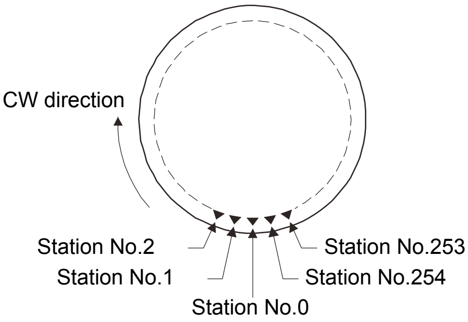

Station No.0 is the set home position. Set the number of stations in the parameter No.PC46.

(2) Rotation direction

There are two types of operation methods: Rotation direction specifying indexer, which is to always rotate in the fixed direction and execute positioning to a station, and Shortest rotating indexer, which is to automatically change the rotation direction for the shortest distance and execute positioning to a station.

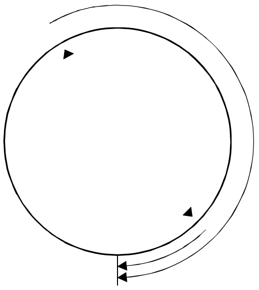

Rotation direction specifying indexer

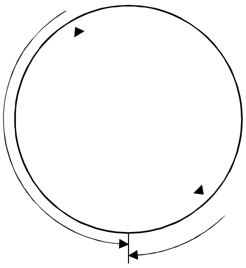

Shortest rotating indexer

16.7.2 Automatic operation mode 1 (Rotation direction specifying indexer)

In this operation mode, the servo motor rotates in the fixed direction and executes positioning to a station.

(1) When not using the remote register

Select the station number using 8-bit device of the next station selection 1 to 8 (RYnA to RYnE, and RY(n＋2)3 to RY(n＋2)5), and execute positioning. For the servo motor speed and acceleration/ deceleration time constant during operation, the value set in the point table is used.

(a) Device/Parameter

Set the input devices and parameters as indicated below.

Item	Device/Parameter	Setting description
Indexer positioning operation selection	Parameter No.PA01	1□□□: Select the indexer positioning operation.
Automatic operation mode 1 (Rotation direction specifying indexer) selection	Operation mode selection 1 (RYn6)	Turn off RYn6.
	Operation mode selection 2 (RYn7)	Turn on RYn7.

(b) Other parameter settings

1) Setting the allocation direction of station numbers

Select the allocation direction of station numbers using the parameter No.PA14 (Station No. direction selection).

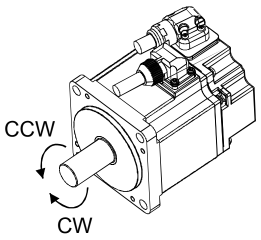

Parameter No.PA14 setting	Station No. allocation direction Start (RYn1) ON
0 (Initial value)	Station No. is allocated in CW direction in order of 1, 2, 3…
1	Station No. is allocated in CCW direction in order of 1, 2, 3…

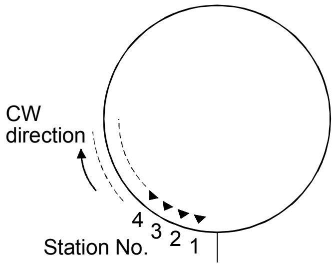

Parameter No.PA14: 0 (Initial value)

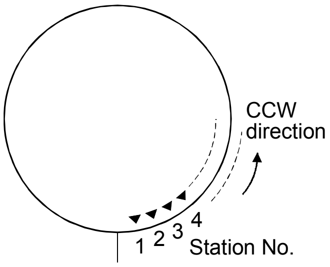

Parameter No.PA14: 1

2) Setting the number of stations

Set the number of stations in the parameter No.PC46.

	Parameter No.PC46 setting value				
	0000 to 0002	0003	0004	・・・	00FF
Number of stations	2	3	4	・・・	255
Station No.	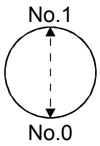	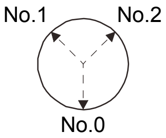	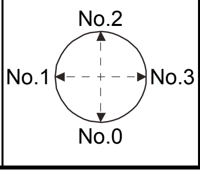	・・・	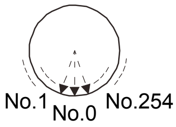

(c) Setting the speed data

Set the servo motor speed, acceleration time constant, and deceleration time constant in the point table number 1 to 8.

Name	Setting range	Unit	Description
Servo motor speed	0 to permissible speed	r/min	Set the command speed of the servo motor for execution of positioning. The setting should be equal to or less than the instantaneous permissible speed of the servo motor. The servo motor speed may not reach to the set speed depending on the number of stations for indexing.
Acceleration time constant	0 to 20000	ms	Set the time until the rated speed of the servo motor is reached.
Deceleration time constant	0 to 20000	ms	Set the time until the servo motor running at rated speed comes to a stop.

(d) Operation

Select the station number for positioning, using 8-bit device of the next station selection 1 to 8 (RYnA to RYnE, and RY(n＋2)3 to RY(n＋2)5).

(Note) Device								Station No.
2 stations occupied								
			1 stations occupied					
RY(n＋2)5	RY(n＋2)4	RY(n＋2)3	RYnE	RYnD	RYnC	RYnB	RYnA	
0	0	0	0	0	0	0	0	0
0	0	0	0	0	0	0	1	1
0	0	0	0	0	0	1	0	2
0	0	0	0	0	1	0	1	3
・ ・ ・	・ ・ ・	・ ・ ・	・ ・ ・	・ ・ ・	・ ・ ・	・ ・ ・	・ ・ ・	・ ・ ・
1	1	1	1	1	1	0	1	253
1	1	1	1	1	1	1	0	254

Note. 0: OFF
1: ON

Select the point table using the speed selection 1 (RY(n＋2)C) to speed selection 3 (RY(n＋2)E). Turn on the start (RYn1) to execute positioning with the speed data set in the point table. Rotation direction of the servo motor is the direction set in the rotation direction specifying (RYn2). When one station is occupied, RY(n＋2)C, RY(n＋2)D, and RY(n＋2)E are not available so that the point table number cannot be selected. Use point table No.1 when one station is occupied.

(Note) Device			Point table No.
RY(n＋2)E	RY(n＋2)D	RY(n＋2)C	
0	0	0	1
0	0	1	2
0	1	0	3
0	1	1	4
1	0	0	5
1	0	1	6
1	1	0	7
1	1	1	8

Note. 0: OFF
1: ON

(e) Timing chart

POINT

- Always execute a home position return. The home positioning incomplete (A90) occurs when turning on the start (RYn1) without executing a home position return.

The timing chart is shown below.

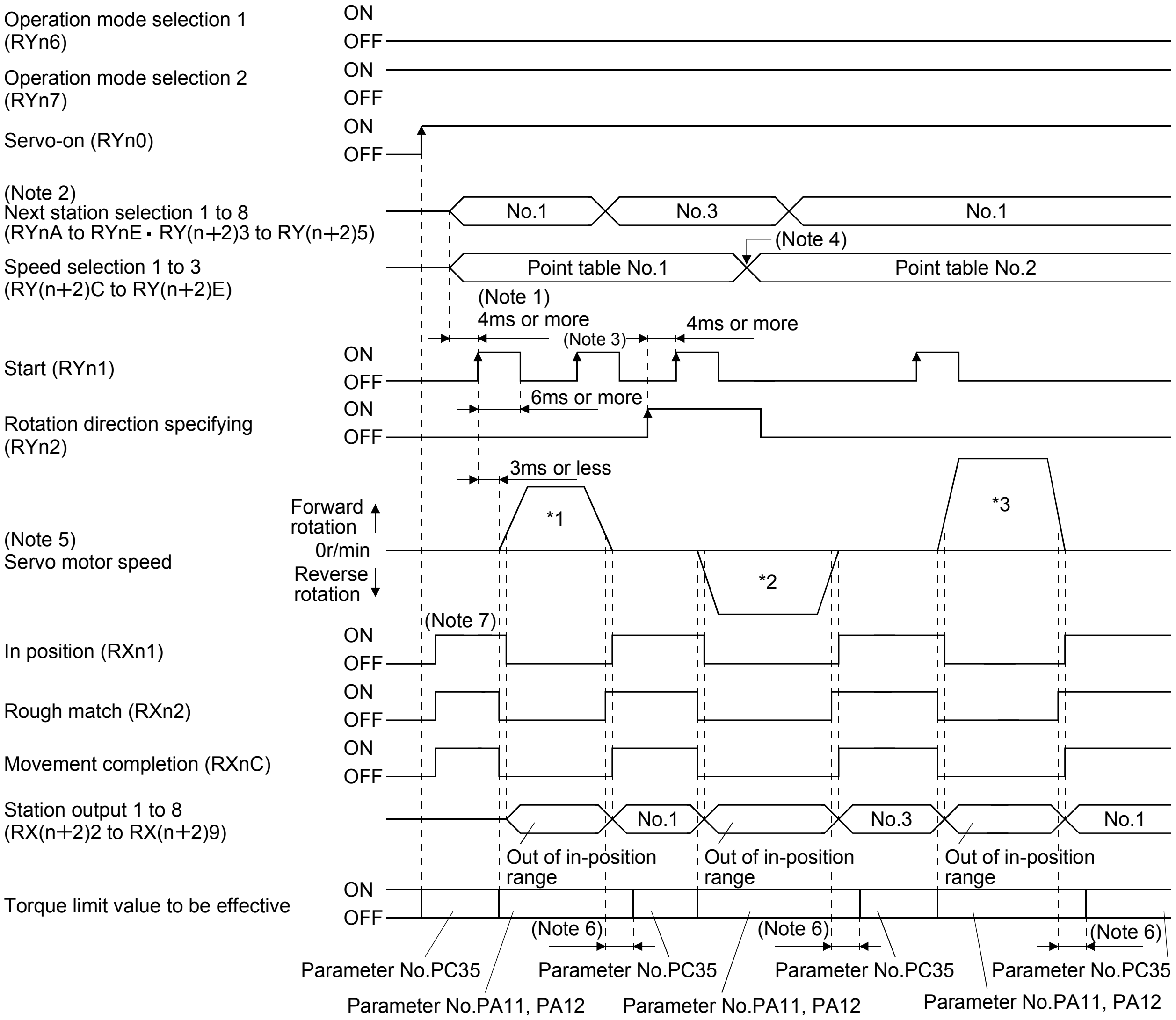

Note 1. Configure a sequence that changes the next station selection (RYnA to RYnE and RY(n＋2)3 to RY(n＋2)5) and speed selection (RY(n＋2)C to RY(n＋2)E) earlier, considering the delay time of CC-Link communication.

2. When the selected station number exceeds the value that is dividing number set in the parameter No.PC46 minus one, the next station warning (A97) occurs.

3. The start (RYn1) is invalid even if it is turned on during operation. When executing another operation, turn on RYn1 after the movement completion (RXnC) turns on.

4. Change of the servo motor speed and acceleration/deceleration time constant by the speed selection 1 (RY(n＋2)C) to speed selection 3 (RY(n＋2)E) becomes effective when the start (RYn1) turns on. Even if the speed selection 1 (RY(n＋2)C) to speed selection 3 (RY(n＋2)E) are changed during servo motor rotation, they do not become effective.

5. The following shows the operation to be executed.

Operation	*1	*2	*3
Station	No.1	No.3	No.1
Servo motor speed Acceleration/deceleration time constant	Point table No.1	Point table No.1	Point table No.2
Positioning	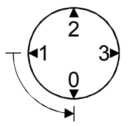	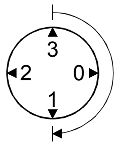	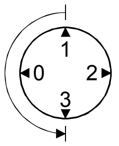

6. Delay time from when RXn1 turns on until the torque limit value changes to the parameter No.PC35 value can be set in the parameter No.PD26.

7. After power-on, if the current position is within the in-position range of each station, the in position (RXn1) turns on.

(2) When using the remote register

Select the station number using the next station (RWwn＋4) remote register and execute positioning. For the speed data during operation, select the point table number using the point table No./Speed command data (RWwn＋6) remote register, or directly set the servo motor speed.

(a) Device/Parameter

Set the input devices and parameters as indicated below.

Item	Device/Parameter	Setting description
Indexer positioning operation selection	Parameter No.PA01	1□□□: Select the indexer positioning operation.
Speed data setting method selection	Parameter No.PC30	Select the setting method for speed data. □□0□: Uses the point table setting value. □□1□: Uses the servo motor speed setting value for the point table No./Speed command data (RWwn+6) remote register. In the case, always set the acceleration/deceleration time constant in the point table No.1. (Refer to (2) (c) in this section.)
Automatic operation mode 1 (Rotation direction specifying indexer) selection	Operation mode selection 1 (RYn6)	Turn off RYn6.
	Operation mode selection 2 (RYn7)	Turn on RYn7.
Position/speed specifying system selection	Position/speed specifying system selection (RY(n＋2)A)	Turn on RY(n＋2)A.

(b) Other parameter settings

1) Setting the servo motor rotation direction and allocation direction of station numbers

Select the allocation direction of station numbers using the parameter No.PA14 (Station No. direction selection). Setting is the same as that for when not using the remote register. Refer to (1) (b) 1) in this section.

2) Setting the number of stations

Set the number of stations in the parameter No.PC46. Setting is the same as that for when not using the remote register. Refer to (1) (b) 2) in this section.

(c) Setting the speed data

1) When using the speed data of point table

Set the servo motor speed, acceleration time constant, and deceleration time constant in the point table number 1 to 8.

Name	Setting range	Unit	Description
Servo motor speed	0 to permissible speed	r/min	Set the command speed of the servo motor for execution of positioning. The setting should be equal to or less than the instantaneous permissible speed of the servo motor. The servo motor speed may not reach to the set speed depending on the number of stations for indexing.
Acceleration time constant	0 to 20000	ms	Set the time until the rated speed of the servo motor is reached.
Deceleration time constant	0 to 20000	ms	Set the time until the servo motor running at rated speed comes to a stop.

2) When directly setting the servo motor speed (only when two stations are occupied)

Set the followings because the acceleration time constant and deceleration time constant of the point table No.1 are used.

Name	Setting range	Unit	Description
Servo motor speed	0 to permissible speed	r/min	Setting is not required.
Acceleration time constant	0 to 20000	ms	Set the time until the rated speed of the servo motor is reached.
Deceleration time constant	0 to 20000	ms	Set the time until the servo motor running at rated speed comes to a stop.

(d) Operation

1) When using the speed data of point table

Set the station number for positioning by using the next station (RWwn+4) remote register. Set the point table number in the point table No./Speed command data (RWwn+6) remote register. Turn on the start (RYn1) to execute positioning with the speed data set in the point table.

2) When directly setting the servo motor speed (only when two stations are occupied)

Set the station number for positioning by using the next station (RWwn+4) remote register. Set the servo motor speed in the point table No./Speed command data (RWwn+6) remote register. Turn on the start (RYn1) to execute positioning with the servo motor speed set in RWwn+6 and the acceleration time constant and deceleration time constant set in the point table No.1.

(e) Timing chart

POINT

- Always execute a home position return. The home positioning incomplete (A90) occurs when turning on the start (RYn1) without executing a home position return.

The timing chart is shown below.

1) When using the speed data of point table

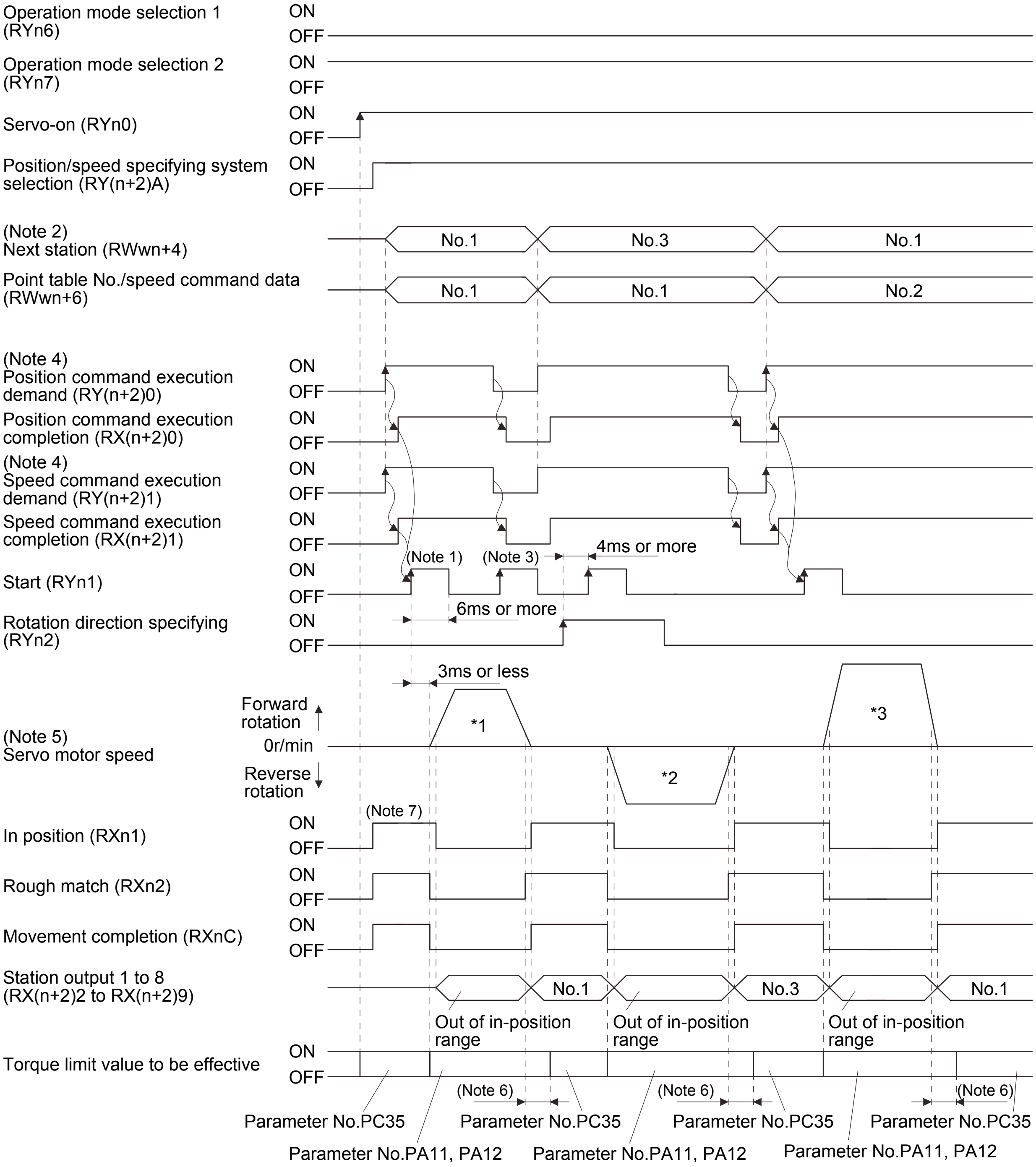

Note 1. Configure a sequence that changes RWwn＋4 and RWwn＋6 earlier, considering the delay time of CC-Link communication.

2. When the selected station number exceeds the value that is dividing number set in the parameter No.PC46 minus one, the next station warning (A97) occurs

3. The start (RYn1) is invalid even if it is turned on during operation. When executing another operation, turn on RYn1 after the movement completion (RXnC) turns on.

4. For details of the operation timing of RY(n＋2)0 and RY(n＋2)1, refer to the section 3.6.2 (3).

5. The following shows the operation to be executed.

Operation	*1	*2	*3
Station	No.1	No.2	No.3
Servo motor speed Acceleration/deceleration time constant	Point table No.1	Point table No.1	Point table No.2
Positioning	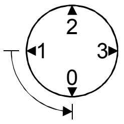	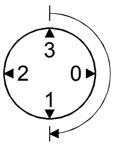	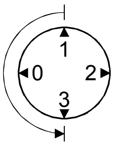

6. Delay time from when RXn1 turns on until the torque limit value changes to the parameter No.PC35 value can be set in the parameter No.PD26.

7. After power-on, if the current position is with the in-position range of each station, the in position (RXn1) turns on.

2) When directly setting the servo motor speed

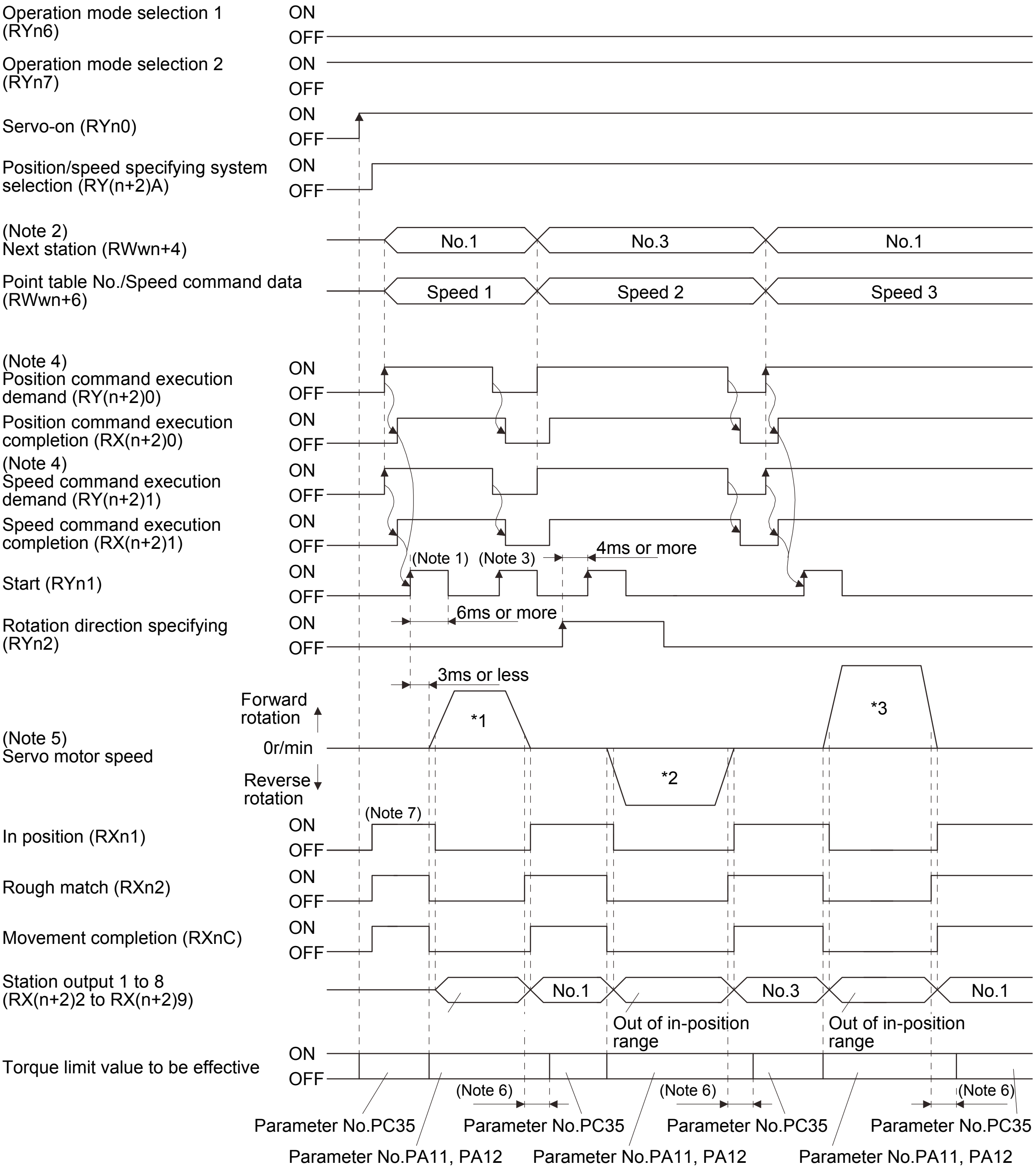

Note 1. Configure a sequence that changes RWwn＋4 and RWwn＋6 earlier, considering the delay time of CC-Link communication.

2. When the selected station number exceeds the value that is dividing number set in the parameter No.PC46 minus one, the next station warning (A97) occurs.

3. The start (RYn1) is invalid even if it is turned on during operation. When executing another operation, turn on RYn1 after the movement completion (RXnC) turns on.

4. For details of the operation timing of RY(n＋2)0 and RY(n＋2)1, refer to the section 3.6.2 (3).

5. The following shows the operation to be executed.

Operation	*1	*2	*3
Station	No.1	No.3	No.1
Servo motor speed	Speed 1	Speed 2	Speed 3
Acceleration/deceleration time constant	Point table No.1	Point table No.1	Point table No.1
Positioning	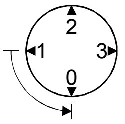	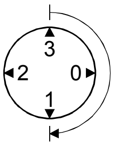	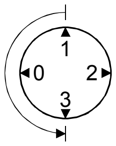

6. Delay time from when RXn1 turns on until the torque limit value changes to the parameter No.PC35 value can be set in the parameter No.PD26.

7. After power-on, if the current position is with the in-position range of each station, the in position (RXn1) turns on.

16.7.3 Automatic operation mode 2 (Shortest rotating indexer)

In this operation mode, the servo motor automatically changes the direction for the shortest distance and executes positioning.

(1) When not using the remote register

Select the station number using 8-bit device of the next station selection 1 to 8 (RYnA to RYnE, and RY(n＋2)3 to RY(n＋2)5), and execute positioning. For the servo motor speed and acceleration/ deceleration time constant during operation, the value set in the point table is used.

(a) Device/Parameter

Set the input devices and parameters as indicated below.

Item	Device/Parameter	Setting description
Indexer positioning operation selection	Parameter No.PA01	1□□□: Select the indexer positioning operation.
Automatic operation mode 2 (Rotation direction specifying indexer) selection	Operation mode selection 1 (RYn6)	Turn on RYn6.
	Operation mode selection 2 (RYn7)	Turn on RYn7.

(b) Other parameter settings (Setting the number of stations)

Set the number of stations in the parameter No.PC46. Setting is the same as that for the automatic operation mode 1. Refer to (1) (b) 2) in section 16.7.2.

In the automatic operation mode 2, the station No. direction selection (parameter No.PA14) is not used.

(c) Setting the speed data

Set the servo motor speed, acceleration time constant, and deceleration time constant in the point table number 1 to 8. Setting is the same as that for the automatic operation mode 1. Refer to (1) (c) in section 16.7.2.

(d) Operation

Select the station number for positioning, using 8-bit device of the next station selection 1 to 8 (RYnA to RYnE, and RY(n+2)3 to RY(n+2)5).

(Note) Device								Station No.
2 stations occupied								
			1 stations occupied					
RY(n＋2)5	RY(n＋2)4	RY(n＋2)3	RYnE	RYnD	RYnC	RYnB	RYnA	
0	0	0	0	0	0	0	0	0
0	0	0	0	0	0	0	1	1
0	0	0	0	0	0	1	0	2
0	0	0	0	0	1	0	1	3
⋮	⋮	⋮	⋮	⋮	⋮	⋮	⋮	⋮
1	1	1	1	1	1	1	0	253
1	1	1	1	1	1	1	1	254

Note. 0: OFF
1: ON

Select the point table using the speed selection 1 (RY(n＋2)C) to speed selection 3 (RY(n＋2)E). Turn on the start (RYn1) to execute positioning with the speed data set in the point table. When one station is occupied, RY(n＋2)C, RY(n＋2)D, and RY(n＋2)E are not available so that the point table number cannot be selected. Use the point table No.1 when one station is occupied.

(Note) Device			Pint table No.
RY(n＋2)E	RY(n＋2)D	RY(n＋2)C	
0	0	0	1
0	0	1	2
0	1	0	3
0	1	1	4
1	0	0	5
1	0	1	6
1	1	0	7
1	1	1	8

Note. 0: OFF
1: ON

(e) Timing chart

POINT

- Always execute a home position return. The home positioning incomplete (A90) occurs when turning on the start (RYn1) without executing a home position return.

The timing chart is shown below.

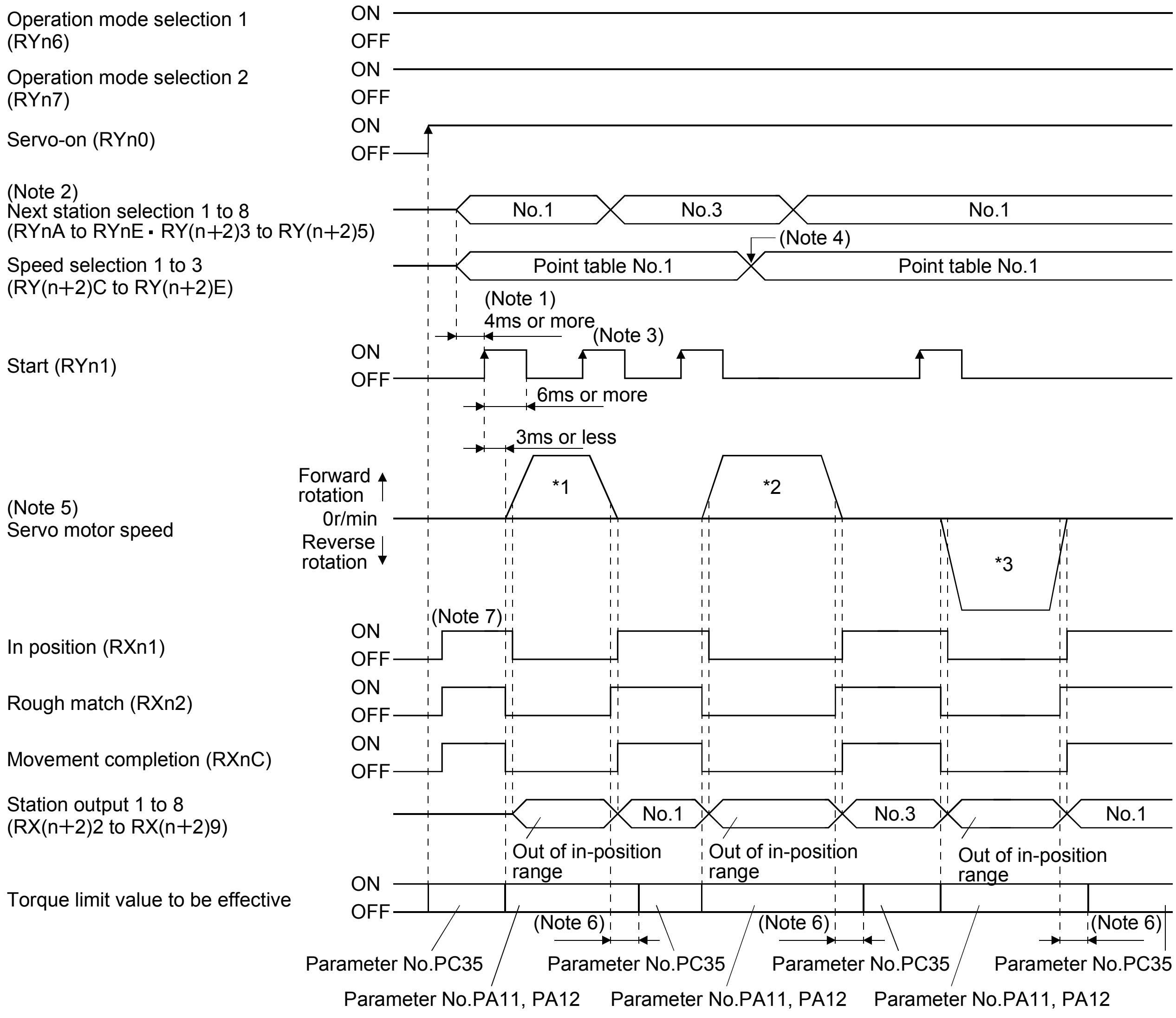

Note 1. Configure a sequence that changes the next station selection (RYnA to RYnE and RY(n＋2)3 to RY(n＋2)5) and speed selection (RY(n＋2)C to RY(n＋2)E) earlier, considering the delay time of CC-Link communication.
2. When the selected station number exceeds the value that is dividing number set in the parameter No.PC46 minus one, the next station warning (A97) occurs.
3. The start (RYn1) is invalid even if it is turned on during operation. When executing another operation, turn on RYn1 after the movement completion (RXnC) turns on.
4. Change of the servo motor speed and acceleration/deceleration time constant by the speed selection 1 (RY(n＋2)C) to speed selection 3 (RY(n＋2)E) becomes effective when the start (RYn1) turns on. Even if the speed selection 1 (RY(n＋2)C) to speed selection 3 (RY(n＋2)E) are changed during servo motor rotation, they do not become effective.
5. The following shows the operation to be executed.

Operation	*1	*2	*3
Station	No.1	No.3	No.1
Servo motor speed Acceleration/deceleration time constant	Point table No.1	Point table No.1	Point table No.2
Positioning	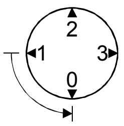	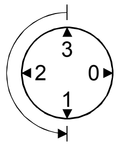	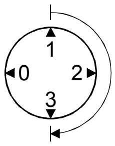

6. Delay time from when RXn1 turns on until the torque limit value changes to the parameter No.PC35 value can be set in the parameter No.PD26.
7. After power-on, if the current position is with the in-position range of each station, the in position (RXn1) turns on.

(2) When using the remote register

Select the station number using the next station (RWwn＋4) remote register and execute positioning. For the speed data during operation, select the point table number using the point table No./Speed command data (RWwn＋6) remote register, or directly set the servo motor speed.

(a) Device/Parameter

Set the input devices and parameters as indicated below.

Item	Device/Parameter	Setting description
Indexer positioning operation selection	Parameter No.PA01	1☐☐☐: Select the indexer positioning operation.
Speed data setting method selection	Parameter No.PC30	Select the setting method for speed data. ☐☐0☐: Uses the point table setting value. ☐☐1☐: Uses the servo motor speed setting value for the point table No./Speed command data (RWwn＋6) remote register. In the case, always set the acceleration/deceleration time constant in the point table No.1. (Refer to (2) (c) in this section.)
Automatic operation mode 2 (Rotation direction specifying indexer) selection	Operation mode selection 1 (RYn6)	Turn on RYn6.
	Operation mode selection 2 (RYn7)	Turn on RYn7.
Position/speed specifying system selection	Position/speed specifying system selection (RY(n＋2)A)	Turn on RY(n＋2)A.

(b) Other parameter settings (Setting the number of stations)

Set the number of stations in the parameter No.PC46. Setting is the same as that for the automatic operation mode 1. Refer to (1) (b) 2) in section 16.7.2.

In the automatic operation mode 2, the station No. direction selection (parameter No.PA14) is not used.

(c) Setting the speed data

1) When using the speed data of point table

Set the servo motor speed, acceleration time constant, and deceleration time constant in the point table number 1 to 7. Setting is the same as that for the automatic operation mode 1. Refer to (2) (c) 1) in section 16.7.2.

2) When directly setting the servo motor speed (only when two stations are occupied)

Set the followings because the acceleration time constant and deceleration time constant of the point table No.1 are used. Setting is the same as that for the automatic operation mode 1. Refer to (2) (c) 2) in section 16.7.2.

(d) Operation

1) When using the speed data of point table

Set the station number for positioning by using the next station (RWwn＋4) remote register. Set the point table number in the point table No./Speed command data (RWwn＋6) remote register. Turn on the start (RYn1) to execute positioning with the speed data set in the point table.

2) When directly setting the servo motor speed (only when two stations are occupied)

Set the station number for positioning by using the next station (RWwn＋4) remote register. Set the servo motor speed in the point table No./Speed command data (RWwn＋6) remote register. Turn on the start (RYn1) to execute positioning with the servo motor speed set in RWwn＋6 and the acceleration time constant and deceleration time constant set in the point table No.1.

(e) Timing chart

POINT
・Always execute a home position return. The home positioning incomplete (A90) occurs when turning on the start (RYn1) without executing a home position return.

The timing chart is shown below.

1) When using the speed data of point table

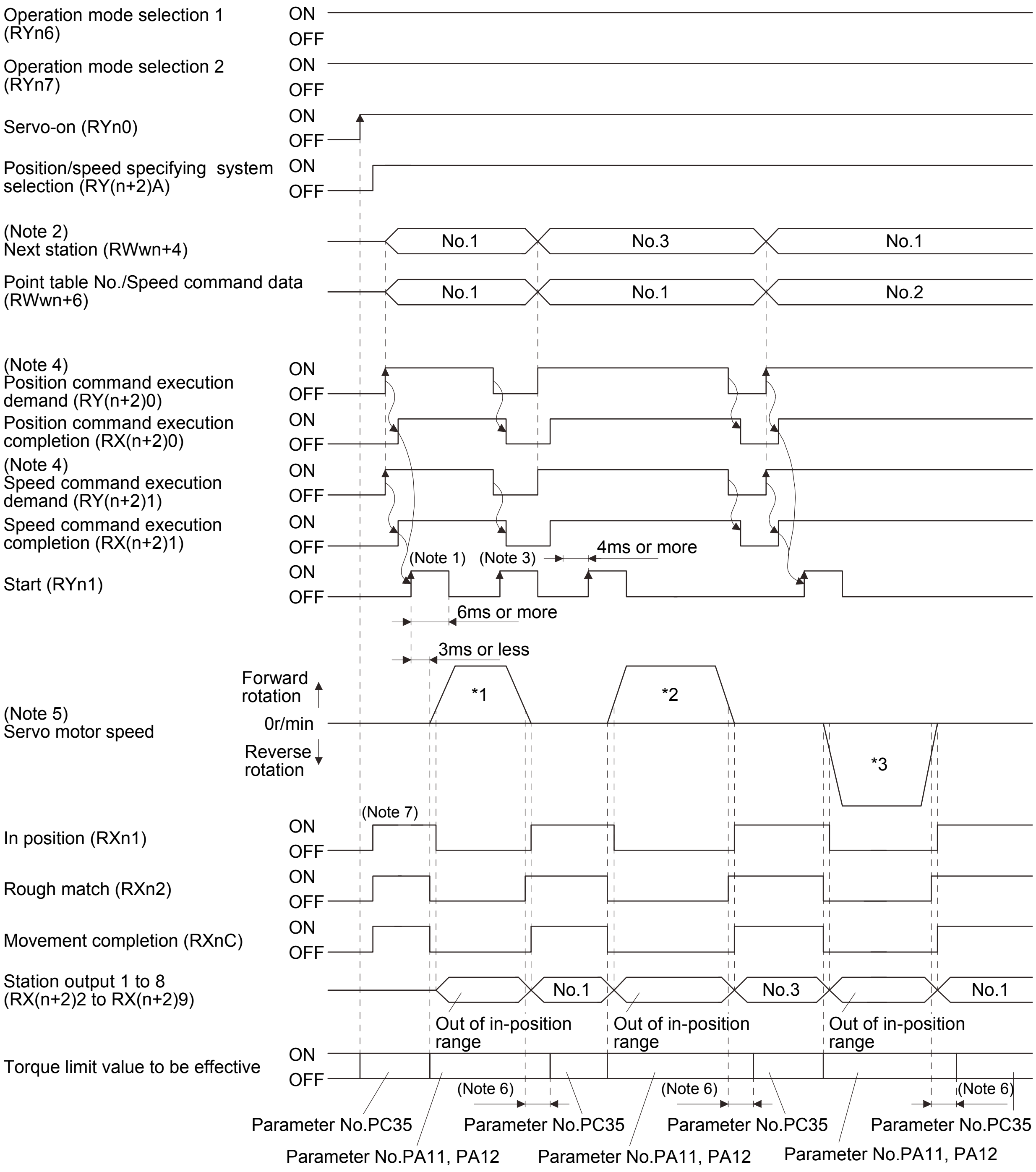

Note 1. Configure a sequence that changes RWwn＋4 and RWwn＋6 earlier, considering the delay time of CC-Link communication.

2. When the selected station number exceeds the value that is dividing number set in the parameter No.PC46 minus one, the next station warning (A97) occurs.

3. The start (RYn1) is invalid even if it is turned on during operation. When executing another operation, turn on RYn1 after the movement completion (RXnC) turns on.

4. For details of the operation timing of RY(n＋2)0 and RY(n＋2)1, refer to the section 3.6.2 (3).

5. The following shows the operation to be executed.

Operation	*1	*2	*3
Station	No.1	No.3	No.1
Servo motor speed Acceleration/deceleration time constant	Point table No.1	Point table No.1	Point table No.2
Positioning	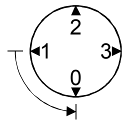	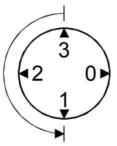	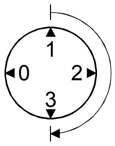

6. Delay time from when RXn1 turns on until the torque limit value changes to the parameter No.PC35 value can be set in the parameter No.PD26.

7. After power-on, if the current position is with the in-position range of each station, the in position (RXn1) turns on.

2) When directly setting the servo motor speed (only when 2 stations are occupied)

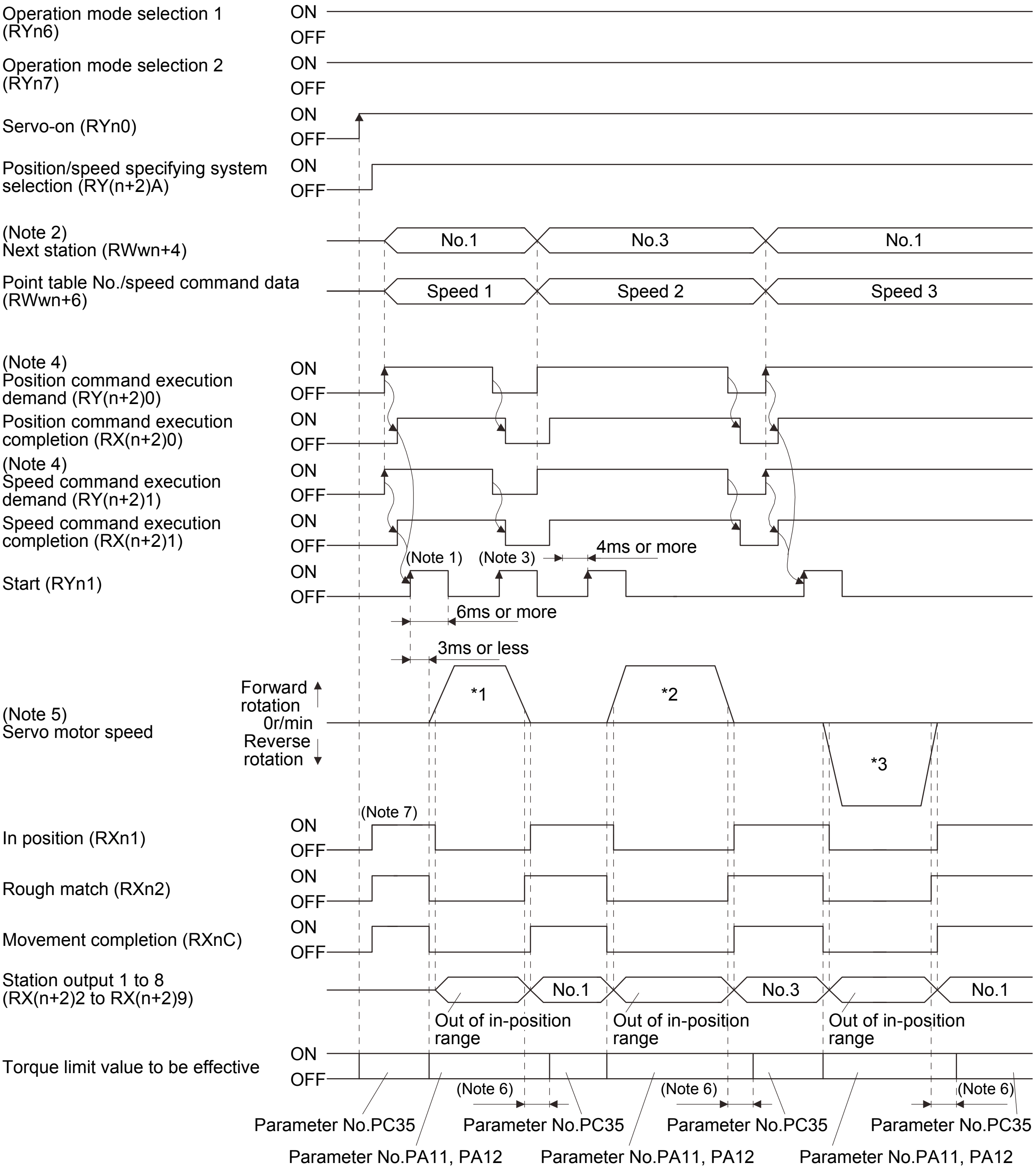

Note 1. Configure a sequence that changes RWwn＋4 and RWwn＋6 earlier, considering the delay time of CC-Link communication.

2. When the selected station number exceeds the value that is dividing number set in the parameter No.PC46 minus one, the next station warning (A97) occurs.

3. The start (RYn1) is invalid even if it is turned on during operation. When executing another operation, turn on RYn1 after the movement completion (RXnC) turns on.

4. For details of the operation timing of RY(n＋2)0 and RY(n＋2)1, refer to the section 3.6.2 (3).

5. The following shows the operation to be executed.

Operation	*1	*2	*3
Station	No.1	No.3	No.1
Servo motor speed	Speed 1	Speed 2	Speed 3
Acceleration/deceleration time constant	Point table No.1	Point table No.1	Point table No.1
Positioning	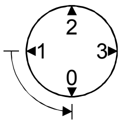	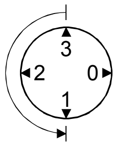	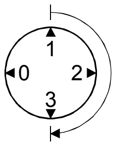

6. Delay time from when RXn1 turns on until the torque limit value changes to the parameter No.PC35 value can be set in the parameter No.PD26.

7. After power-on, if the current position is with the in-position range of each station, the in position (RXn1) turns on.

16.8 Manual operation mode

For adjusting the machine or home position, JOG operation or indexer JOG operation can be used to move the position to any position.

16.8.1 Indexer JOG operation

(1) Setting

Set the devices and parameters as indicated below according to the purpose of use. In this case, the next station selection 1 to 8 (RYnA to RYnE and RY(n＋2)3 to RY(n＋2)5) and the speed selection 1 to 3 (RY(n＋2)C to RY(n＋2)E) are invalid.

Item	Device/Parameter	Setting description
Indexer positioning operation selection	Parameter No.PA01	1□□□: Select the indexer positioning operation.
Manual operation mode selection	Operation mode selection 1 (RYn6)	Turn on RYn6.
	Operation mode selection 2 (RYn7)	Turn off RYn7.
Indexer JOG operation selection	Parameter No.PC45	Set it to "□□□0 (Initial value)"
Station No. direction	Parameter No.PA14	Refer to (2) in this section.
JOG speed	Point table No.1	Use the servo motor speed in the point table No.1.
Acceleration/deceleration time constant	Point table No.1	Use the acceleration/deceleration time constant in the point table No.1.

(2) Setting the allocation direction of station numbers

Select the allocation direction of station numbers using the parameter No.PA14 (Station No. direction selection).

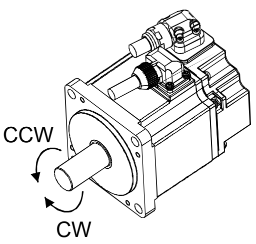

Parameter No.PA14 setting	Station No. allocation direction Start (RYn1) ON
0 (Initial value)	Station No. is allocated in CW direction in order of 1, 2, 3…
1	Station No. is allocated in CCW direction in order of 1, 2, 3…

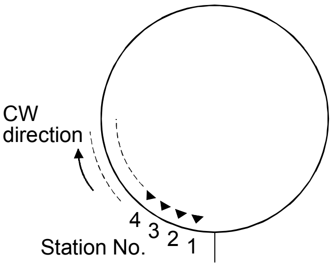

Parameter No.PA14: 0 (Initial value)

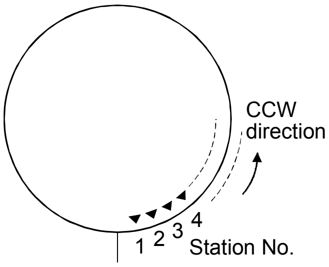

Parameter No.PA14: 1

(3) Operation

Turn on the start (RYn1) to operate the servo motor with the servo motor speed, acceleration time constant, and deceleration time constant set in the point table No.1. Turning off RYn1 makes the servo motor execute positioning to the station where the servo motor can decelerate to stop. For the rotation direction, refer to (2) in this section.

(4) Timing chart

The following timing chart shows an example when executing the indexer JOG operation from the status where the servo motor is at a stop on the station No.0 when the servo-on is turned on.

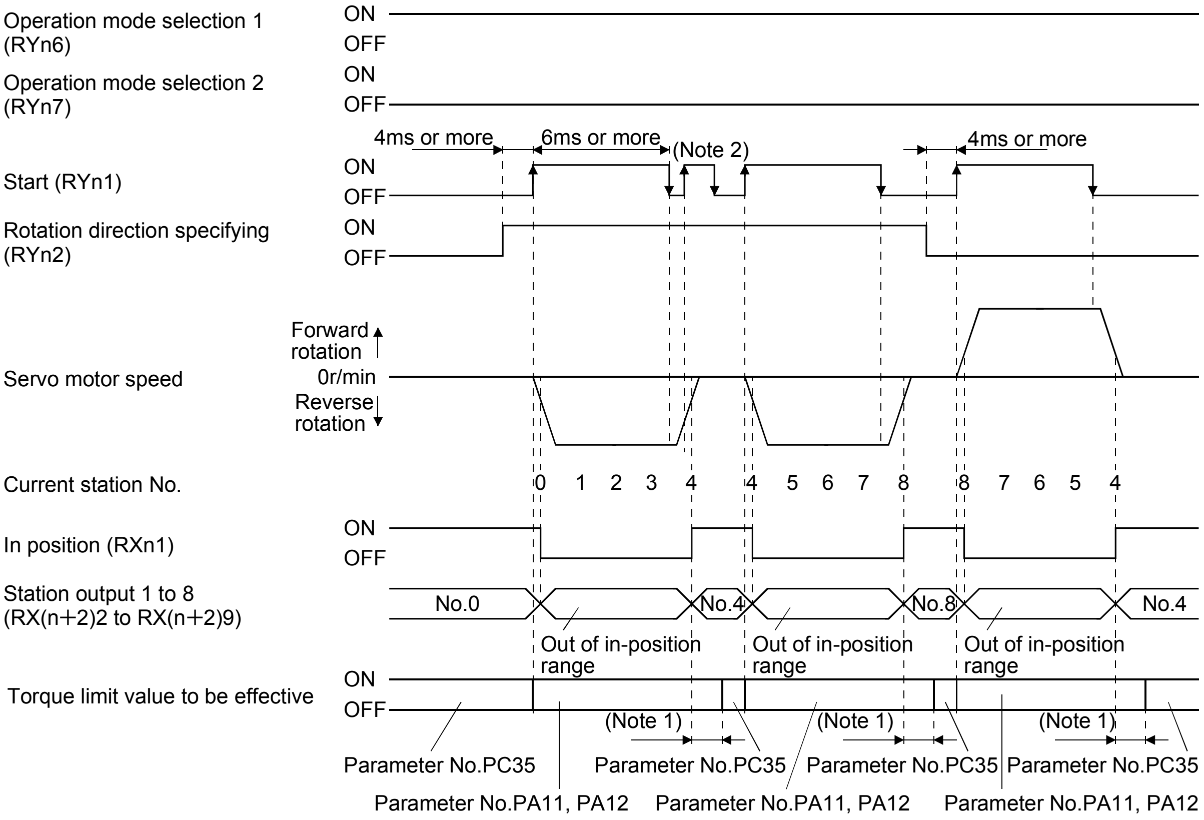

Note 1. Torque limit delay time can be set in the parameter No.PD26.

2. The start (RYn1) is invalid even if it is turned on during operation. When executing another operation, turn on RYn1 after the movement completion (RXnC) turns on.

16.8.2 JOG operation

(1) Setting

Set the devices and parameters as indicated below for the purpose of use. In this case, the next station selection 1 to 8 (RYnA to RYnE and RY(n＋2)3 to RY(n＋2)5) and the speed selection 1 to 3 (RY(n＋2)C to RY(n＋2)E) are invalid.

Item	Device/Parameter	Setting description
Indexer positioning operation selection	Parameter No.PA01	1□□□: Select the indexer positioning operation.
Manual operation mode selection	Operation mode selection 1 (RYn6)	Turn on RYn6
	Operation mode selection 2 (RYn7)	Turn off RYn7
JOG operation selection	Parameter No.PC45	Set it to "□□□1".
Station No. direction	Parameter No.PA14	Refer to (2) in this section.
JOG speed	Parameter No.PC12	Use the servo motor speed depending on parameter No.PC12.
Acceleration/deceleration time constant	Point table No.1	Use the acceleration/deceleration time constant in the point table No.1.

(2) Operation

Turn on the start (RYn1) to operate the servo motor with the servo motor speed set in the parameter No.PC12, acceleration time constant and deceleration time constant set in the point table No.1. Turning off RYn1 makes the servo motor decelerate to stop regardless of stations. For the rotation direction, refer to (2) in section 16.8.1.

(3) Timing chart

The following timing chart shows an example when executing the JOG operation from the status where the servo motor is at a stop on the station No.0 when the servo-on is turned on.

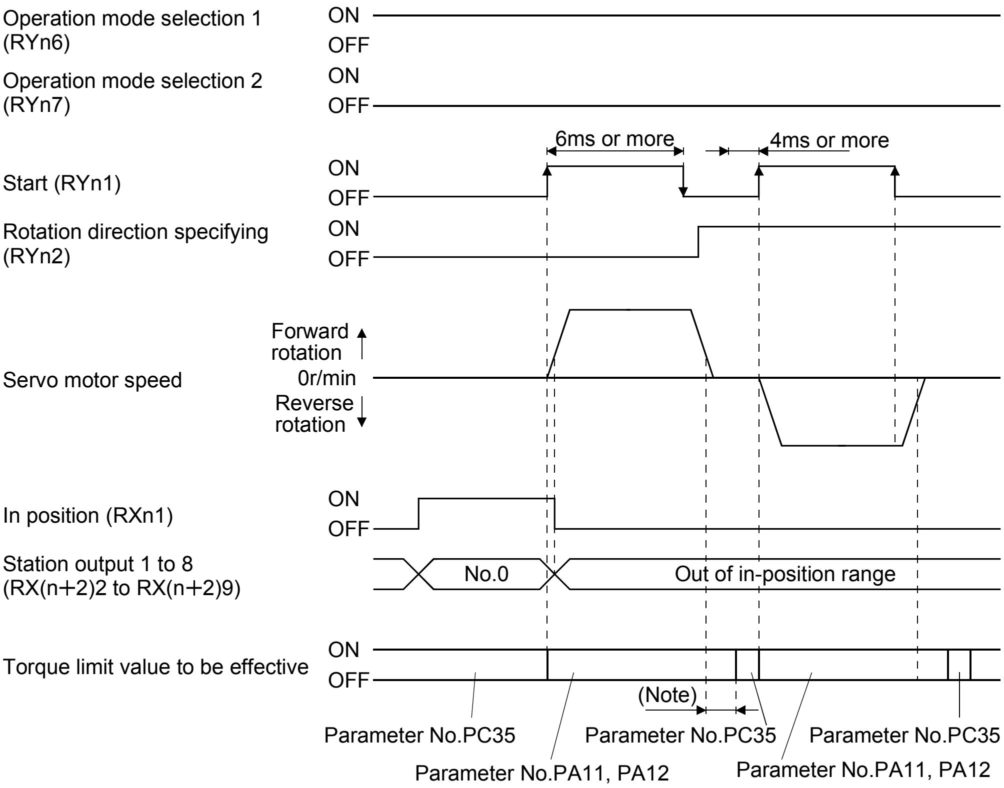

Note. Torque limit delay time can be set in the parameter No.PD26.

16.9 Home position return mode

16.9.1 Outline of home position return

Home position return is performed to match the command coordinates with the machine coordinates. In the incremental system, home position return is required every time input power is switched on. In the absolute position detection system, once home position return is done at the time of installation, the current position is retained if power is switched off. Hence, home position return is not required when power is switched on again.
This servo amplifier has the home position return methods given in this section. Choose the most appropriate method for your machine structure and application.
This servo amplifier has the home position return automatic return function which executes home position return by making an automatic return to a proper position if the machine has stopped beyond or at the proximity dog. Manual motion by jog operation or the like is not required.

(1) Home position return types
Choose the optimum home position return according to the machine type, etc.

Type	Home position return method	Features
Torque limit changing dog type home position return	With deceleration started at the front end of a proximity dog, the position where the first Z-phase signal is given past the rear end of the dog or a motion has been made over the home position shift distance starting from the Z-phase signal is defined as a home position.	･General home position return method using a proximity dog. ･Repeatability of home position return is excellent. ･The machine is less burdened. ･Used when the width of the proximity dog can be set greater than the deceleration distance of the servo motor. ･Torque limit value by the parameter No.PC35 (Internal torque limit 2) becomes effective while the servo motor at stop.
Torque limit changing data setting type home position return	An arbitrary position is defined as a home position.	･No proximity dog required. ･Torque limit value turns to “0” in the home position return mode.

(2) Home position return parameter
When performing home position return, set each parameter as follows.

(a) Choose the home position return method with parameter No.PC02 (Home position return type).

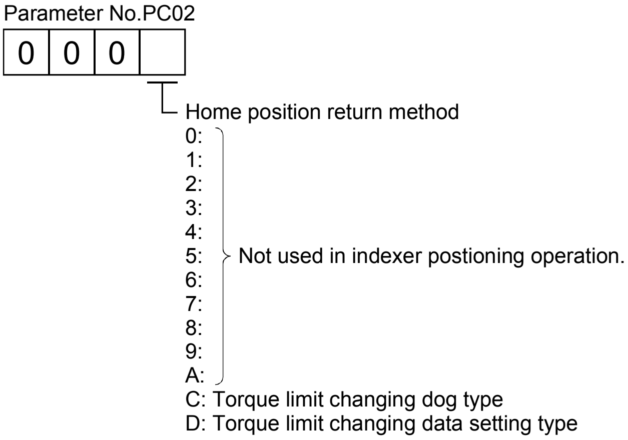

(b) Choose the starting direction of home position return with parameter No.PC03 (Home position return direction). Set "0" to start home position return in the direction in which the station No. is incremented from the current position, or "1" to start home position return in the direction in which the address is decremented.

Parameter No.PC03

0	0	0	

Home position return direction
0: Station No. increment direction
1: Station No. decrement direction

(c) Choose the polarity at which the proximity dog is detected with parameter No.PD16 (Input polarity setting). Set "0" to detect the dog when the proximity dog device (DOG) is OFF, or "1" to detect the dog when the device is ON.

Parameter No.PD16

0	0	0	

Proximity dog input polarity
0: OFF indicates detection of the dog
1: ON indicates detection of the dog

(3) Instructions

1) Before starting home position return, always make sure that the limit switch operates.

2) Confirm the home position return direction. Incorrect setting will cause the machine to run reversely.

3) Confirm the proximity dog input polarity. Not doing so may cause unexpected operation.

16.9.2 Torque limit changing dog type home position return

A home position return method using a proximity dog. With deceleration started at the front end of the proximity dog, the position where the first Z-phase signal is given past the rear end of the dog or a motion has been made over the home position shift distance starting from the Z-phase signal is defined as a home position. A limit can be put on the servo motor torque at home position return execution and at stop separately.

(1) Devices, parameters

Set the input devices and parameters as follows.

Item	Device/Parameter used	Description
Home position return mode selection	Operation mode selection 1 (RYn6)	Turn off RYn6.
	Operation mode selection 2 (RYn7)	Turn off RYn7.
Torque limit changing dog type home position return	Parameter No.PC02	□□□C: Torque limit changing dog type home position return is selected.
Home position return direction	Parameter No.PC03	Refer to section 16.9.1 (2) and choose home position return direction.
Dog input polarity	Parameter No.PD16	Refer to section 16.9.1 (2) and choose dog input polarity.
Home position return speed	Parameter No.PC04	Set speed until detection of dog.
Creep speed	Parameter No.PC05	Set speed after detection of dog.
Home position shift distance	Parameter No.PC06	Set when shifting the home position starting at the first Z-phase signal after passage of proximity dog rear end.
Home position return acceleration/deceleration time constants	Point table No.1	Use the acceleration/deceleration time constants of point table No.1.
Torque limit value at home position return execution	Point table No.PA11	Set the torque limit value for the forward rotation direction at home position return execution.
	Point table No.PA12	Set the torque limit value for the reverse rotation direction at home position return execution.
Torque limit value at stop	Point table No.PC35	Set the torque limit value at stop.

(2) Length of proximity dog

Adjust the length of proximity dog or home position return speed so that the servo motor speed reaches to the creep speed while detecting the proximity dog (DOG).

$$L_1 \geq \frac{V}{60} \cdot \frac{td}{2} \times \frac{CDV}{CMX} \times 360$$

L_1 : Angle that proximity dog holds on the circumference of machine side [degree]
V : Home position return speed of motor side [r/min]
td : Deceleration time of motor side [s]

(3) Timing chart

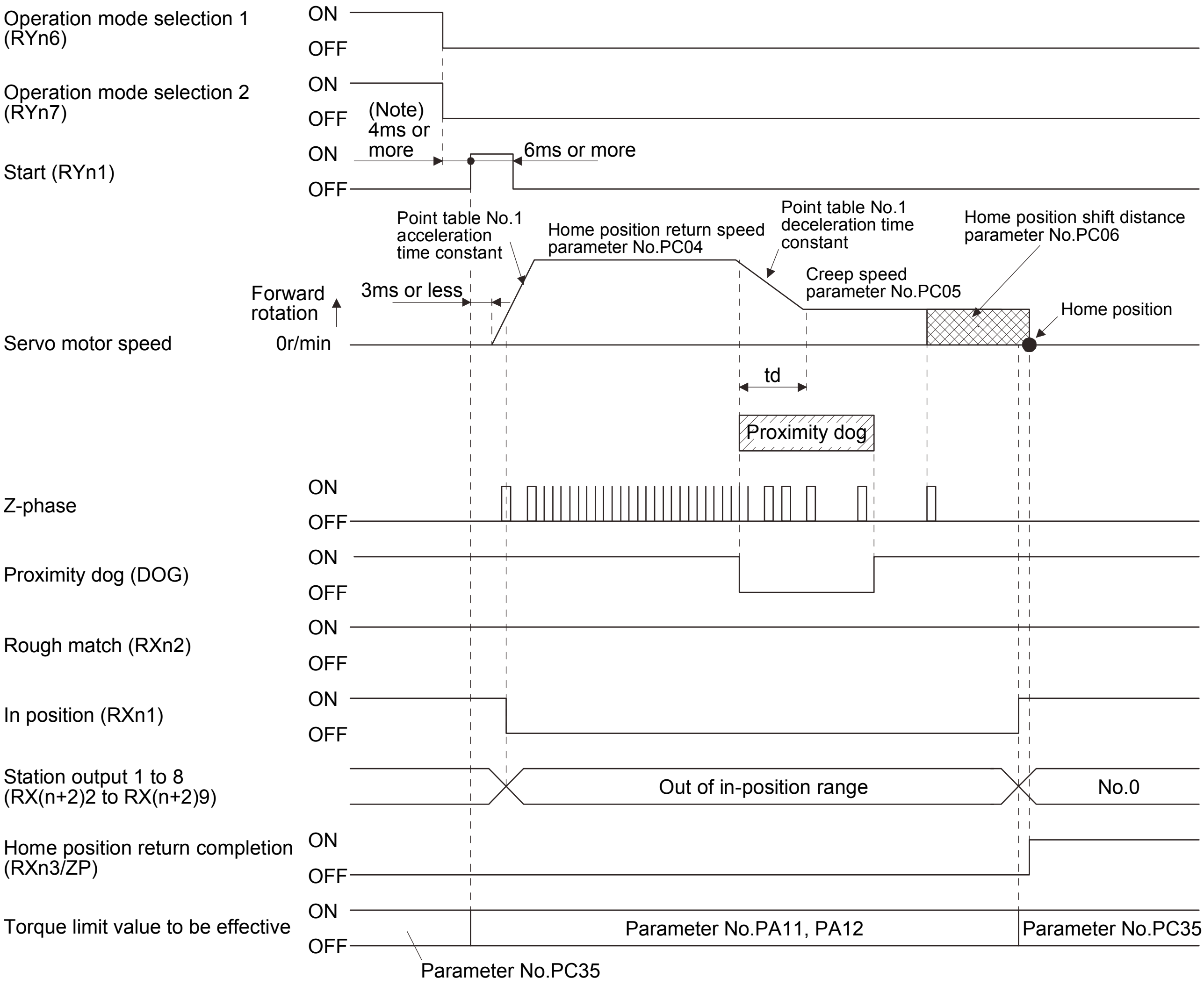

Note. Configure a sequence that changes the operation mode earlier, considering the delay time of CC-Link communication.

16.9.3 Torque limit changing data setting type home position return

POINT

- Torque limit becomes effective after completing the torque limit changing data setting type home position return, so that when the servo motor is rotated by the external force, a difference occurs in between the command position and the current position. In the home position return mode, even if a difference occurs in between the command position and the current position, the error excessive alarm (A52) does not occur. Therefore, when the mode is changed from home position return to automatic operation, depending on the size of difference between the command position and the current position, the error excessive alarm (A52) occurs. Note that if the error excessive alarm (A52) does not occur, the servo motor rotates to eliminate the difference.

Use the torque limit changing data setting type home position return to set the home position in any place. JOG operation can be used for moving a position. For this home position return, torque generation is stopped at the same time when the mode is changed to the home position return mode. Home position can be set for any position by rotating the axis with external force.

The proximity dog (DOG) cannot be used. The proximity dog (DOG) is disabled even if it is turned off.

(1) Device/Parameter

Set the input devices and parameters as indicated below.

Item	Device/Parameter	Setting description
Home position return mode selection	Operation mode selection 1 (RYn6)	Turn off RYn6.
	Operation mode selection 2 (RYn7)	Turn off RYn7.
Position/speed specifying system by remote register (only when 2 stations are occupied)	Position/speed specifying system selection (RY(n＋2)A)	Turn off RY(n＋2)A.
Torque limit changing data setting type home position return	Parameter No.PC02	□□□D: Select the torque limit changing data setting type.

(2) Timing chart

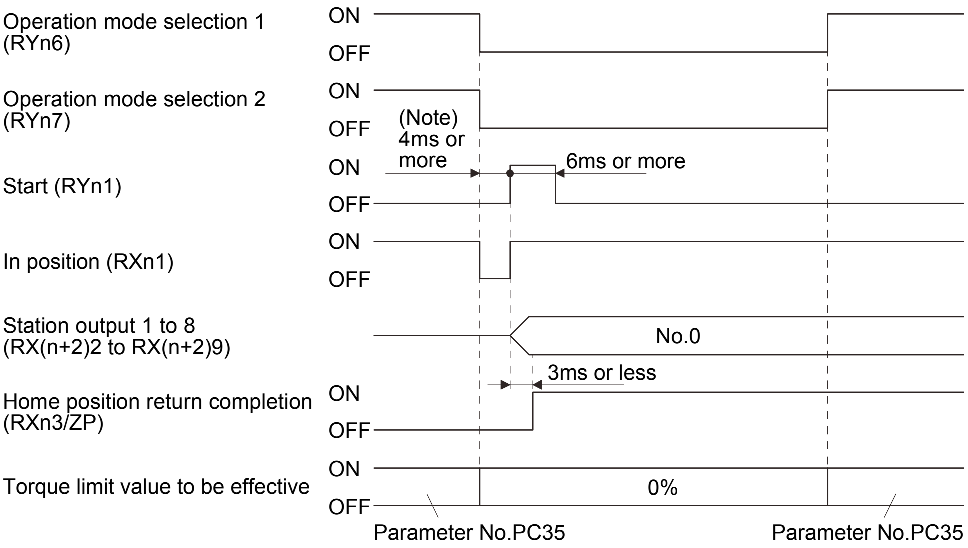

Note. Configure a sequence that changes the operation mode earlier, considering the delay time of CC-Link communication.

16.9.4 Home position return automatic return function

If the current position is at or beyond the proximity dog in the home position return using the proximity dog, this function starts home position return after making a return to the position where the home position return can be made.

(1) When the current position is at the proximity dog

When the current position is at the proximity dog, an automatic return is made before home position return.

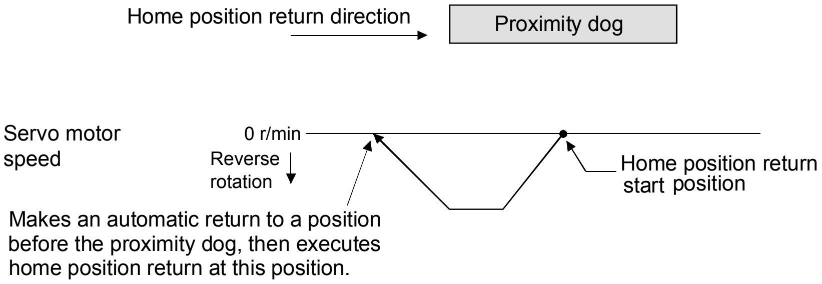

(2) When the current position is beyond the proximity dog

At a start, a motion is made in the home position return direction and an automatic return is made on detection of the stroke end (LSP or LSN). The motion stops past the front end of the proximity dog, and home position return is resumed at that position. If the proximity dog cannot be detected, the motion stops on detection of the LSP or LSN switch and A90 occurs.

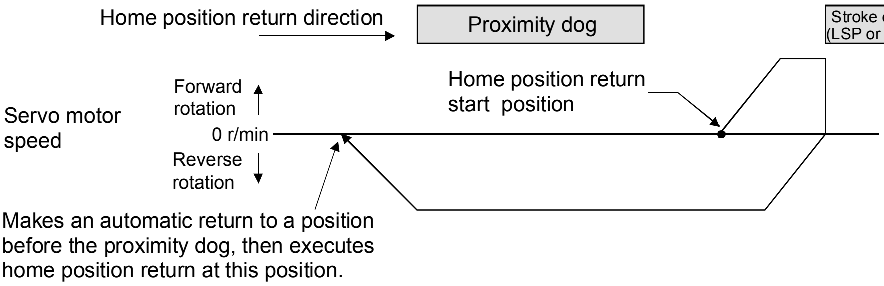

Software limit cannot be used with these functions.

16.10 Absolute position detection system

CAUTION

- If an absolute position erase alarm (A25) or an absolute position counter warning (AE3) has occurred, always perform home position setting again. Not doing so may cause unexpected operation.

POINT

- If the encoder cable is disconnected, absolute position data will be lost in the following servo motor series. HF-MP, HF-KP, HF-SP, HC-RP, HC-UP, HC-LP, HA-LP, and HF-JP. After disconnecting the encoder cable, always execute home position setting and then positioning operation.
- When the following parameters are changed, the home position is lost when turning on the power after the change. Execute the home position return again when turning on the power.
  - Parameter No.PA06 (Number of gears on machine-side)
  - Parameter No.PA07 (Number of gears on servo motor-side)
  - Parameter No.PA14 (Station No. direction selection)
  - Parameter No.PC07 (Home position return position data)

This servo amplifier contains a single-axis controller. Also, all servo motor encoders are compatible with an absolute position detection system. Hence, an absolute position detection system can be configured up by merely loading an absolute position data back-up battery and setting parameter values.

(1) Restrictions

In the absolute position detection system, the following restriction condition applies for the number of gears on machine-side (parameter No.PA06 CMX) and servo motor speed (N).

- When CMX ≦ 2000, N ＜ 3076.7 r/min
- When CMX ＞ 2000, N ＜ 3276.7 - CMX r/min

When the servo motor is operated at servo motor speed higher than the limited value, the absolute position counter warning (AE3) occurs.

(2) Specifications

Item	Description
System	Electronic battery backup system.
Battery	1 piece of lithium battery (primary battery, nominal＋3.6V) Type: MR-J3BAT.
Maximum revolution range	Home position＋32767 rev.
(Note 1) Maximum speed at power failure	3000r/min
(Note 2) Battery backup time	Approx. 10,000 hours (battery life with power off)
(Note 3) Battery life	5 years from date of manufacture.

Note 1. Maximum speed available when the shaft is rotated by external force at the time of power failure or the like.

2. Time to hold data by a battery with power off. Change the batteries within three years since the operation start regardless of the power supply on/off. If the battery is used out of specification, the absolute position erased (A25) may occur.

3. Quality of battery degrades by the storage condition. It is recommended to connect the battery to the servo amplifier and use it in 2 years from the production date. The life of battery is 5 years from the production date regardless of the connection.

(3) Structure

Component	Description
Servo amplifier	Use standard models.
Servo motor	
Battery	MR-J3BAT
Encoder cable	Use a standard model. (Refer to section 14.1.)

(4) Parameter setting

Set parameter No. PA03 (Absolute position detection system) as indicated below to make the absolute position detection system valid.

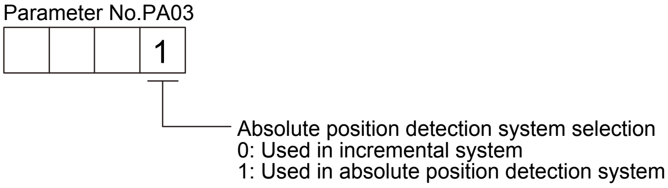

16.10.1 Outline of absolute position detection data communication

For normal operation, as shown below, the encoder consists of a detector designed to detect a position within one revolution and a cumulative revolution counter designed to detect the number of revolutions.

The absolute position detection system always detects the absolute position of the machine and keeps it battery-backed, independently of whether the general-purpose programming controller power is on or off. Therefore, once the home position is defined at the time of machine installation, home position return is not needed when power is switched on thereafter.

If a power failure or a fault occurs, restoration is easy.

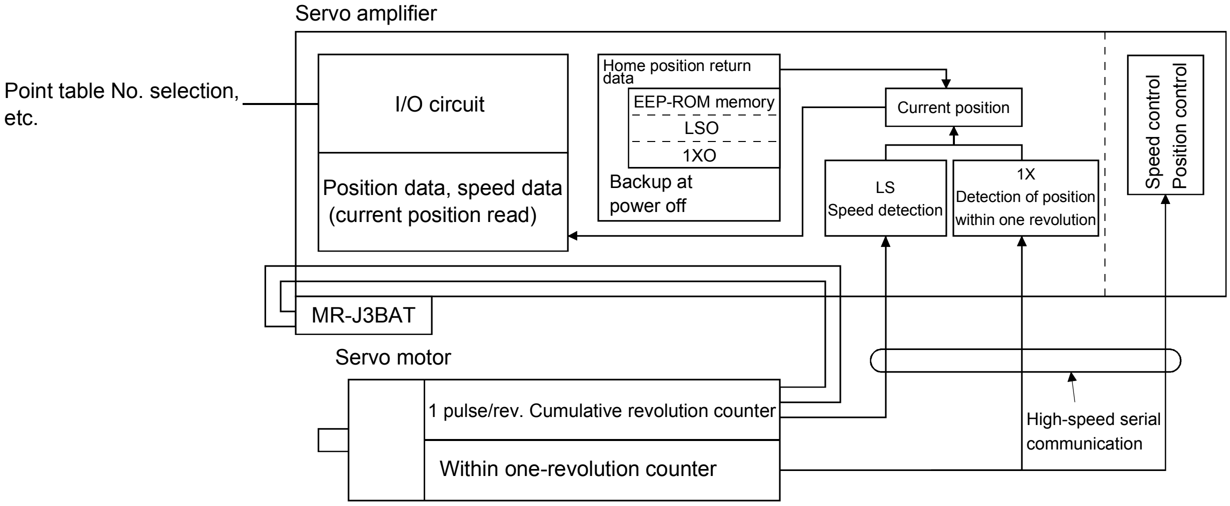

16.10.2 Battery replacement procedure

⚠ WARNING

- Before replacing a battery, turn off the main circuit power and wait for 15 minutes or longer until the charge lamp turns off. Then, confirm that the voltage between P(＋) and N(－) is safe with a voltage tester and others. Otherwise, an electric shock may occur. In addition, always confirm from the front of the servo amplifier whether the charge lamp is off or not.

POINT

- The internal circuits of the servo amplifier may be damaged by static electricity. Always take the following precautions.
  - Ground human body and work bench.
  - Do not touch the conductive areas, such as connector pins and electrical parts, directly by hand.

(1) When replacing battery with the control circuit power on

POINT

- Replacing battery with the control circuit power off will erase the absolute position data.

Replacing battery with the control circuit power on will not erase the absolute position data. Refer to section 16.10.3 for mounting procedure of battery to the servo amplifier.
To replace battery with the control circuit power off, refer to (2) of this section.

(2) When replacing battery with the control circuit power off

Replacing battery with the control circuit power off will erase the absolute position data, but battery can be replaced without erasing the absolute position data in the following procedure.
In this procedure, MR-J3BTCBL03M battery connection cable is required.
MR-J3BTCBL03M cannot be added after home position is set. Make sure to connect MR-J3BTCBL03M between the servo amplifier and the encoder cable when connecting the encoder cable.
Refer to section 16.10.4 for the replacement procedure of the battery.

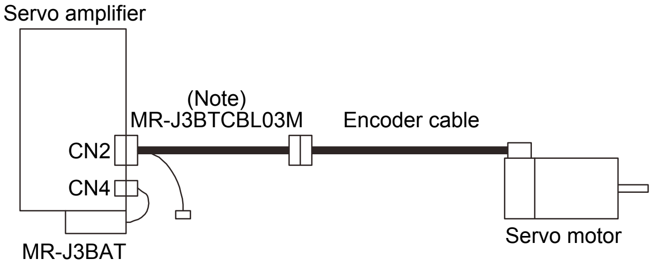

Note. Make sure to connecting MR-J3BTCBL03M when connecting the encoder cable.

16.10.3 Battery installation procedure

POINT

- For the servo amplifier with a battery holder on the bottom, it is not possible to wire for the earth with the battery installed. Insert the battery after executing the earth wiring of the servo amplifier.

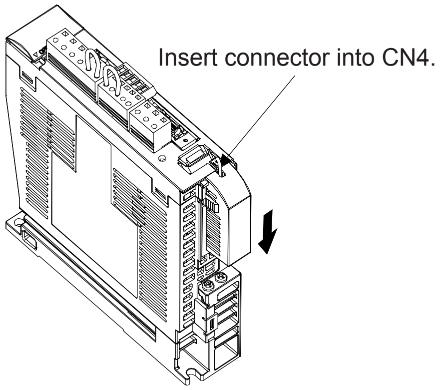

For MR-J3-350T or less・MR-J3-200T4 or less

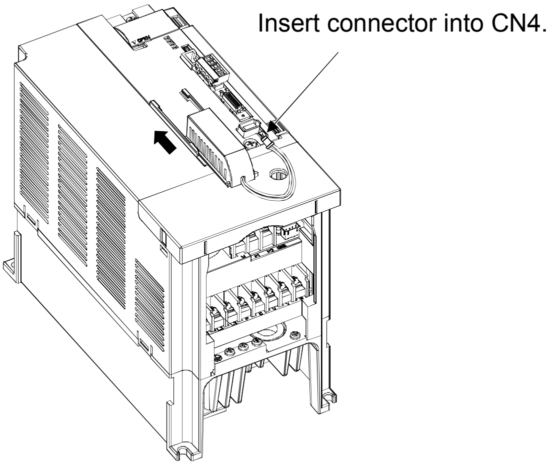

For MR-J3-500T or more・MR-J3-350T4 or more

16.10.4 Procedure to replace battery with the control circuit power off

(1) Preparation for battery replacement

For the battery replacement, a backup battery is required separately from the battery to be replaced. Prepare the following batteries.

Product name	Application・Quantity	Remarks
MR-J3BAT	1 for backup	Battery within 2 years from the date of manufacture
	1 for replacement	

(2) Replacement procedure

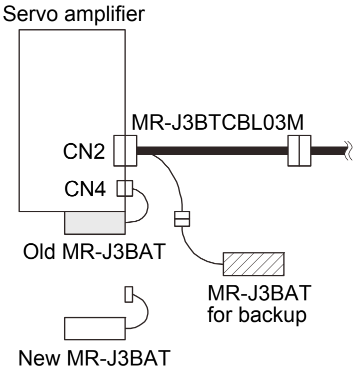

Step 1
Connect MR-J3BAT for backup to the battery connector of MR-J3BTCBL03M.

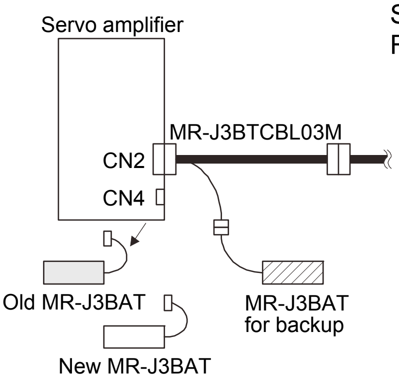

Step 2
Remove old MR-J3BAT from the servo amplifier.

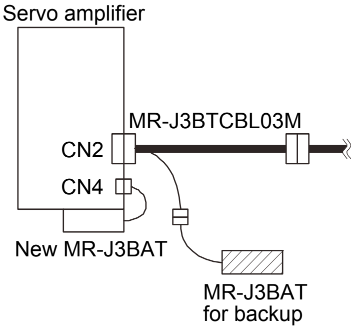

Step 3
Mount new MR-J3BAT to the servo amplifier. Then, connect the lead wire plug of new MR-J3BAT to the CN4 connector of the servo amplifier.

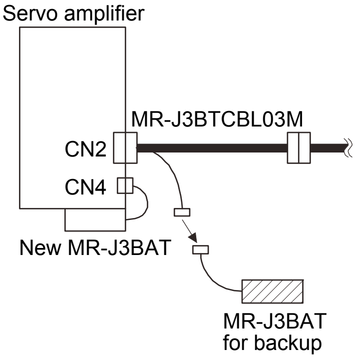

Step 4
Remove the MR-J3BAT for backup from the battery connector of MR-J3BTCBL03M, and the procedure is completed.

16.11 Parameters

CAUTION	
⚠CAUTION	· Never adjust or change the parameter values extremely as it will make operation instable. · If fixed values are written in the digits of a parameter, do not change these values. · Do not change parameters for manufacturer setting. · Do not set any values other than the described setting values to each parameter.

POINT

- For any parameter whose symbol is preceded by *, set the parameter value and switch power off once, then switch it on again to make that parameter setting valid.

In this servo amplifier, the parameters are classified into the following groups on a function basis.

Parameter group	Main description
Basic setting parameters (No.PA□□)	Make basic setting with these parameters. Generally, the operation is possible only with these parameter settings.
Gain/filter parameters (No.PB□□)	Use these parameters when making gain adjustment manually.
Extension setting parameters (No.PC□□)	These parameters are inherent to the MR-J3-□T servo amplifier.
I/O setting parameters (No.PD□□)	Use these parameters when changing the I/O devices of the servo amplifier.

Mainly setting the basic setting parameters (No.PA□□) allows the setting of the basic parameters at the time of introduction.

16.11.1 Basic setting parameters (No.PA□□)

(1) Parameter list

No.	Symbol	Name	Initial value	Unit
PA01	*STY	Control mode	0000h	
PA02	*REG	Regenerative option	0000h	
PA03	*ABS	Absolute position detection system	0000h	
PA04		Not used in indexer positioning operation. Do not change the parameter.	0000h	
PA05	*FTY	Feeding function selection	0000h	
PA06	*CMX	Number of gears on machine-side	1	
PA07	*CDV	Number of gears on servo motor-side	1	
PA08	ATU	Auto tuning mode	0001h	
PA09	RSP	Auto tuning response	12	
PA10	INP	In-position range	100	pulse
PA11	TLP	Forward rotation torque limit	100.0	%
PA12	TLN	Reverse rotation torque limit	100.0	%
PA13		For manufacturer setting	0002h	
PA14	*POL	Rotation direction selection	0	
PA15	*ENR	Encoder output pulses	4000	pulse/rev
PA16		For manufacturer setting Do not change this valve by any means.	0	
PA17			0000h	
PA18			0000h	
PA19	*BLK	Parameter write inhibit	000Ch	

(2) Parameter write inhibit

Parameter			Initial value	Unit	Setting range
No.	Symbol	Name			
PA19	*BLK	Parameter write inhibit	000Ch		Refer to the text.

POINT

- This parameter is made valid when power is switched off, then on after setting.

In the factory setting, this servo amplifier allows changes to the basic setting parameter, gain/filter parameter and extension setting parameter settings. With the setting of parameter No.PA19, write can be disabled to prevent accidental changes.

The following table indicates the parameters which are enabled for reference and write by the setting of parameter No.PA19. Operation can be performed for the parameters marked ○ .

Parameter No.PA19 setting	Setting operation	Basic setting parameters No.PA□□	Gain/Filter parameters No.PB□□	Extension setting parameters No.PC□□	I/O setting parameters No.PD□□
0000h	Reference	○			
	Write	○			
000Bh	Reference	○	○	○	
	Write	○	○	○	
000Ch (initial value)	Reference	○	○	○	○
	Write	○	○	○	○
100Bh	Reference	○			
	Write	Parameter No. PA19 only			
100Ch	Reference	○	○	○	○
	Write	Parameter No. PA19 only			

(3) Selection of command method, maximum torque of the HF-KP series servo motor, and operation method

Parameter			Initial value	Unit	Setting range
No.	Symbol	Name			
PA01	*STY	Control mode	0000h		Refer to the text.

POINT

- This parameter is made valid when power is switched off, then on after setting.

Select command method, maximum torque of the HF-KP series servo motor, and operation method.

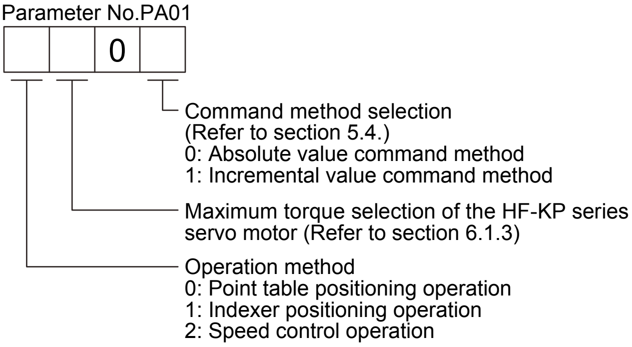

(4) Selection of regenerative option

Parameter			Initial value	Unit	Setting range
No.	Symbol	Name			
PA02	*REG	Regenerative option	0000h		Refer to the text.

POINT

- This parameter is made valid when power is switched off, then on after setting.
- Wrong setting may cause the regenerative option to burn.
- If the regenerative option selected is not for use with the servo amplifier, parameter error (A37) occurs.

Set this parameter when using the regenerative option, brake unit, power regeneration converter, or power regeneration common converter.

Parameter No.PA02

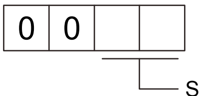

Selection of regenerative option
00: Regenerative option is not used
- For servo amplifier of 100W, regenerative resistor is not used.
- For servo amplifier of 200 to 7kW, built-in regenerative resistor is used.
- Supplied regenerative resistors or regenerative option is used with the servo amplifier of 11k to 22kW.

01: FR-BU2-(H)･FR-RC-(H)･FR-CV-(H)
02: MR-RB032
03: MR-RB12
04: MR-RB32
05: MR-RB30
06: MR-RB50(Cooling fan is required)
08: MR-RB31
09: MR-RB51(Cooling fan is required)
80: MR-RB1H-4
81: MR-RB3M-4(Cooling fan is required)
82: MR-RB3G-4(Cooling fan is required)
83: MR-RB5G-4(Cooling fan is required)
84: MR-RB34-4(Cooling fan is required)
85: MR-RB54-4(Cooling fan is required)
FA: When the supplied regenerative resistors or the regenerative option is cooled by the cooling fan to increase the ability with the servo amplifier of 11k to 22kW.

(5) Using absolute position detection system

Parameter			Initial value	Unit	Setting range
No.	Symbol	Name			
PA03	*ABS	Absolute position detection system	0000h		Refer to the text.

POINT

- This parameter is made valid when power is switched off, then on after setting.

Set this parameter when using the absolute position detection system.

Parameter No.PA03

0	0	0	

Selection of absolute position detection system (refer to section 16.10)
0: Used in incremental system
1: Used in absolute position detection system

(6) Servo motor speed setting unit selection

Parameter			Initial value	Unit	Setting range
No.	Symbol	Name			
PA05	*FTY	Feeding function selection	0000h		Refer to the text.

POINT

- This parameter is made valid when power is switched off, then on after setting.

Select setting units for the servo motor speed.

Parameter No. PA05

0		0	0

Servo motor speed setting unit selection
0: 1r/min unit
1: 0.1r/min unit
Setting to "1" will be as follows.
- The setting value of the servo motor speed will be limited to 6553.5r/min.
- The "Servo motor speed" status will be displayed as 0.1r/min unit.

(7) Electronic gear

Parameter			Initial value	Unit	Setting range
No.	Symbol	Name			
PA06	*CMX	Number of gears on machine-side	1		1 to 16384
PA07	*CDV	Number of gears on servo motor-side	1		1 to 16384

⚠CAUTION ・False setting will result in unexpected operation, causing injury.

POINT

- This parameter is made valid when power is switched off, then on after setting.
- Set the electronic gear within the following condition range.
  (1) 1/9999≦CMX/CDV≦9999
  (2) CDV×STN≦32767
  (3) CMX×CDV≦100000
  When a value out of the condition range is set, the parameter error (A37) occurs. If the setting of electronic gear ratio is small, the servo motor may not operate with the set servo motor speed.
- Setting range of the parameters No.PA06 and PA07 for the indexer positioning operation is 1 to 16384. It is different from the setting range for the point table positioning operation.

Use the parameters No. PA06 and PA07 to adjust the rotation amount “m” on the servo motor shaft that is necessary to rotate the machine side “n” times. A setting example for electronic gear is shown next.

(a) Example 1

When the number of pulley teeth on the machine-side is 50, and the number of pulley teeth on the servo motor side is 20.

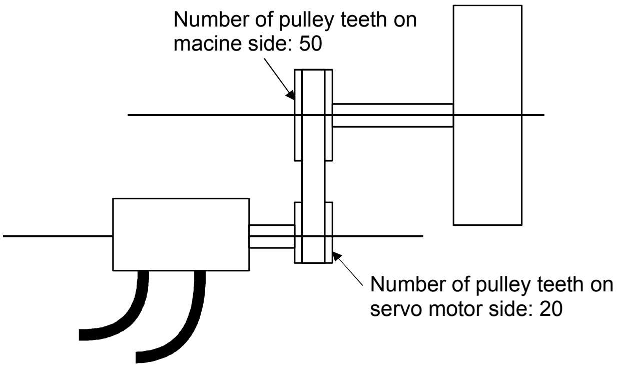

Parameter No.PA06: 50
Parameter No.PA07: 20

(b) Example 2

When the number of pulley teeth on the machine-side is 50, the number of pulley teeth on the servo motor side is 20, and using the servo motor with 1/9 reduction gear.

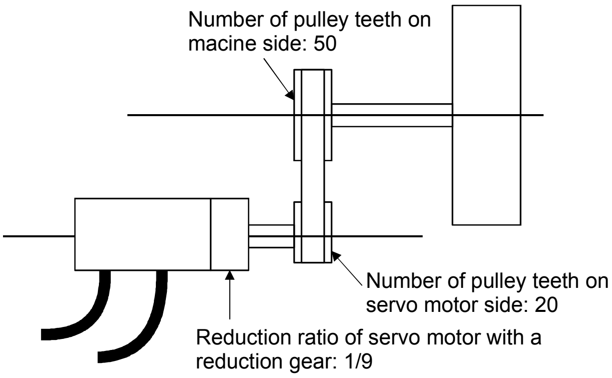

$$\frac{50}{20} \times \frac{9}{1} = \frac{450}{20}$$

Parameter No.PA06: 450
Parameter No.PA07: 20

(8) Auto tuning

Parameter			Initial value	Unit	Setting range
No.	Symbol	Name			
PA08	ATU	Auto tuning mode	0001h		Refer to the text.
PA09	RSP	Auto tuning response	12		1 to 32

Make gain adjustment using auto tuning. Refer to section 9.2 for details.

(a) Auto tuning mode (parameter No.PA08)

Select the gain adjustment mode.

Parameter No.PA08

0	0	0	

Gain adjustment mode setting

Setting	Gain adjustment mode	Automatically set parameter No. (Note)
0	Interpolation mode	PB06・PB08・PB09・PB10
1	Auto tuning mode 1	PB06・PB07・PB08・PB09・PB10
2	Auto tuning mode 2	PB07・PB08・PB09・PB10
3	Manual mode	

Note. The parameters have the following names.

Parameter No.	Name
PB06	Ratio of load inertia moment to servo motor inertia moment
PB07	Model loop gain
PB08	Position loop gain
PB09	Speed loop gain
PB10	Speed integral compensation

(b) Auto tuning response (parameter No.PA09)

If the machine hunts or generates large gear sound, decrease the set value. To improve performance, e.g. shorten the settling time, increase the set value.

Setting	Response	Guideline for machine resonance frequency [Hz]
1	Low response	10.0
2	↑	11.3
3		12.7
4		14.3
5		16.1
6		18.1
7		20.4
8		23.0
9		25.9
10		29.2
11		32.9
12		37.0
13		41.7
14		47.0
15	↓	52.9
16	Middle response	59.6

Setting	Response	Guideline for machine resonance frequency [Hz]
17	Low response	67.1
18	↑	75.6
19		85.2
20		95.9
21		108.0
22		121.7
23		137.1
24		154.4
25		173.9
26		195.9
27		220.6
28		248.5
29		279.9
30		315.3
31	↓	355.1
32	Middle response	400.0

(9) In-position range

Parameter			Initial value	Unit	Setting range
No.	Symbol	Name			
PA10	INP	In-position range	100	pulse	0 to 10000

Set the range for outputting travel completion (RXnC) and in-position (RXn1) in command pulse unit.

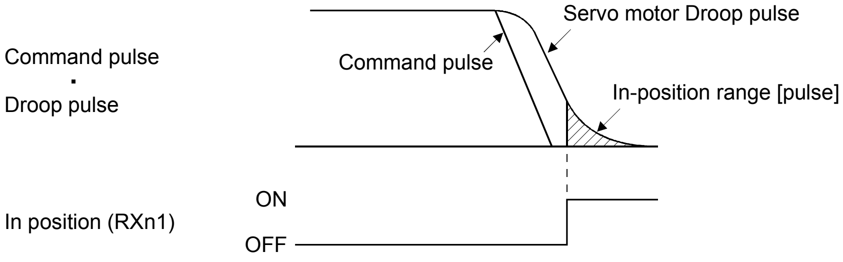

(10) Torque limit

Parameter			Initial value	Unit	Setting range
No.	Symbol	Name			
PA11	TLP	Forward rotation torque limit	100.0	%	0 to 100.0
PA12	TLN	Reverse rotation torque limit	100.0	%	0 to 100.0

The torque generated by the servo motor can be limited.

(a) Forward rotation torque limit (parameter No.PA11)
Set this parameter on the assumption that the maximum torque is 100[%]. Set this parameter when limiting the torque of the servo motor in the CCW driving mode or CW regeneration mode. Set this parameter to "0.0" to generate no torque.

(b) Reverse rotation torque limit (parameter No.PA12)
Set this parameter on the assumption that the maximum torque is 100[%]. Set this parameter when limiting the torque of the servo motor in the CW driving mode or CCW regeneration mode. Set this parameter to "0.0" to generate no torque.

(11) Station No. direction selection

Parameter			Initial value	Unit	Setting range
No.	Symbol	Name			
PA14	*POL	Station No. direction selection	0		0・1

POINT

- This parameter is made valid when power is switched off, then on after setting.

Select the allocation direction of station numbers using the parameter No.PA14 (Station No. direction selection).

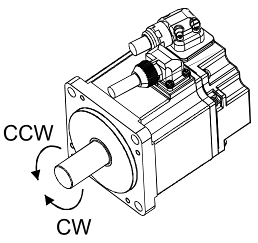

Parameter No.PA14 setting	Station No. allocation direction Start (RYn1) ON
0 (Initial value)	Station No. is allocated in CW direction in order of 1, 2, 3...
1	Station No. is allocated in CCW direction in order of 1, 2, 3...

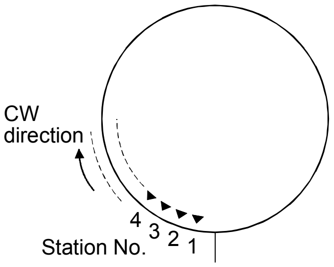

Parameter No.PA14: 0 (Initial value)

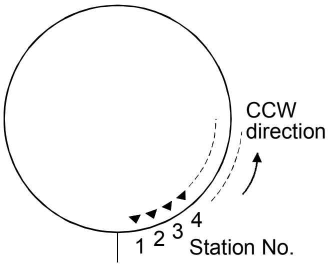

Parameter No.PA14: 1

(12) Encoder output pulse

Parameter			Initial value	Unit	Setting range
No.	Symbol	Name			
PA15	*ENR	Encoder output pulse	4000	pulse/rev	1 to 65535

POINT

- This parameter is made valid when power is switched off, then on after setting.

Used to set the encoder pulses (A-phase, B-phase) output by the servo amplifier.
Set the value 4 times greater than the A-phase or B-phase pulses.
You can use parameter No.PC19 to choose the output pulse setting or output division ratio setting.
The number of A/B-phase pulses actually output is 1/4 times greater than the preset number of pulses.
The maximum output frequency is 4.6Mpps (after multiplication by 4). Use this parameter within this range.

(a) For output pulse designation

Set "□□0□" (initial value) in parameter No.PC19.
Set the number of pulses per servo motor revolution.
Output pulse = set value [pulses/rev]
For instance, set "5600" to Parameter No.PA15, the actually output A/B-phase pulses are as indicated below.

$$\text{A} \cdot \text{B-phase output pulses} = \frac{5600}{4} = 1400[\text{pulse}]$$

(b) For output division ratio setting

Set "□□1□" in parameter No.PC19.
The number of pulses per servo motor revolution is divided by the set value.

$$\text{Output pulse} = \frac{\text{Resolution per servo motor revolution}}{\text{Set value}} \ [\text{pulses/rev}]$$

For instance, set "8" to Parameter No.PA15, the actually output A/B-phase pulses are as indicated below.

$$\text{A} \cdot \text{B-phase output pulses} = \frac{262144}{8} \cdot \frac{1}{4} = 8192[\text{pulse}]$$

16.11.2 Gain/filter parameters (No.PB□□)

(1) Parameter list

No.	Symbol	Name	Initial value	Unit
PB01	FILT	Adaptive tuning mode (Adaptive filter Ⅱ)	0000h	
PB02	VRFT	Vibration suppression control tuning mode (Advanced vibration suppression control)	0000h	
PB03		For manufacturer setting	0000h	
PB04	FFC	Feed forward gain	0	%
PB05		For manufacturer setting	500	
PB06	GD2	Ratio of load inertia moment to servo motor inertia moment	7.0	Multiplier (×1)
PB07	PG1	Model loop gain	24	rad/s
PB08	PG2	Position loop gain	37	rad/s
PB09	VG2	Speed loop gain	823	rad/s
PB10	VIC	Speed integral compensation	33.7	ms
PB11	VDC	Speed differential compensation	980	
PB12		For manufacturer setting	0	
PB13	NH1	Machine resonance suppression filter 1	4500	Hz
PB14	NHQ1	Notch shape selection 1	0000h	
PB15	NH2	Machine resonance suppression filter 2	4500	Hz
PB16	NHQ2	Notch shape selection 2	0000h	
PB17		Automatic setting parameter		
PB18	LPF	Low-pass filter	3141	rad/s
PB19	VRF1	Vibration suppression control vibration frequency setting	100.0	Hz
PB20	VRF2	Vibration suppression control resonance frequency setting	100.0	Hz
PB21		For manufacturer setting	0.00	
PB22			0.00	
PB23	VFBF	Low-pass filter selection	0000h	
PB24	*MVS	Slight vibration suppression control selection	0000h	
PB25		For manufacturer setting	0000h	
PB26	*CDP	Gain switching selection	0000h	
PB27	CDL	Gain switching condition	10	kpps pulse r/min
PB28	CDT	Gain switching time constant	1	ms
PB29	GD2B	Gain switching ratio of load inertia moment to servo motor inertia moment	7.0	Multiplier (×1)
PB30	PG2B	Gain switching position loop gain	37	rad/s
PB31	VG2B	Gain switching speed loop gain	823	rad/s
PB32	VICB	Gain switching speed integral compensation	33.7	ms
PB33	VRF1B	Gain switching vibration suppression control vibration frequency setting	100.0	Hz
PB34	VRF2B	Gain switching vibration suppression control resonance frequency setting	100.0	Hz
PB35		For manufacturer setting	0.00	
PB36			0.00	
PB37			100	
PB38			0	
PB39			0	
PB40			0	
PB41			1125	
PB42			1125	
PB43			0004h	
PB44			0000h	
PB45			0000h	

(2) Detail list

<table>
<tr><th>No.</th><th>Symbol</th><th>Name and function</th><th>Initial value</th><th>Unit</th><th>Setting range</th></tr>
<tr><td>PB01</td><td>FILT</td><td>
Adaptive tuning mode (Adaptive filter Ⅱ)
Select the setting method for adaptive tuning. Setting this parameter to "□□□1" (filter tuning mode) automatically changes the machine resonance suppression filter 1 (parameter No.PB13) and notch shape selection 1 (parameter No.PB14).

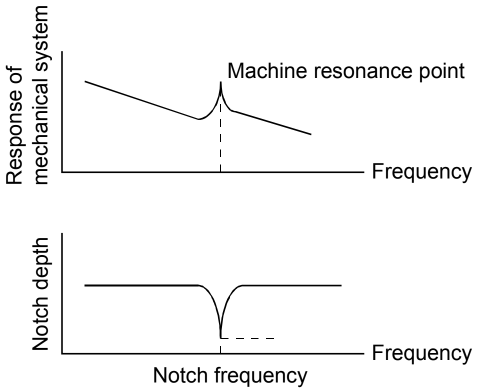

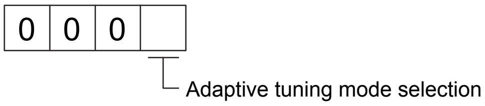

<table>
<tr><th>Setting</th><th>Adaptive tuning mode</th><th>Automatically set parameter</th></tr>
<tr><td>0</td><td>Filter OFF</td><td>(Note)</td></tr>
<tr><td>1</td><td>Filter tuning mode</td><td>Parameter No.PB13
Parameter No.PB14</td></tr>
<tr><td>2</td><td>Manual mode</td><td></td></tr>
</table>

Note. Parameter No.PB13 and PB14 are fixed to the initial values.

When this parameter is set to "□□□1", the tuning is completed after the predetermined number of positioning operations are executed for the predetermined period of time, and the setting changes to "□□□2". When the adaptive tuning is not necessary, the setting changes to "□□□0". When this parameter is set to "□□□0", the initial values are set to the machine resonance suppression filter 1 and notch shape selection 1. However, this does not operate when the servo off.
</td><td>0000h</td><td></td><td></td></tr>
</table>

<table>
<tr><th>No.</th><th>Symbol</th><th>Name and function</th><th>Initial value</th><th>Unit</th><th>Setting range</th></tr>
<tr><td>PB02</td><td>VRFT</td><td>Vibration suppression control tuning mode (Advanced vibration suppression control)
The vibration suppression is valid when the parameter No.PA08 (auto tuning mode) setting is "□□□2" or "□□□3". When PA08 is "□□□1", vibration suppression is always invalid.
Select the setting method for vibration suppression control tuning. Setting this parameter to "□□□1" (vibration suppression control tuning mode) automatically changes the vibration suppression control vibration frequency (parameter No.PB19) and vibration suppression control resonance frequency (parameter No.PB20) after the predetermined number of positioning operations are executed.
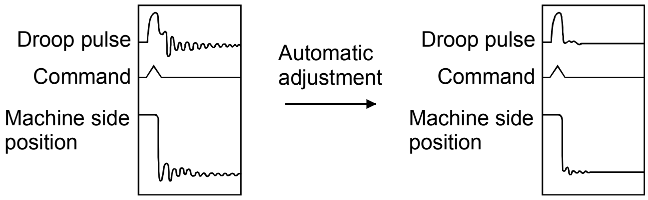

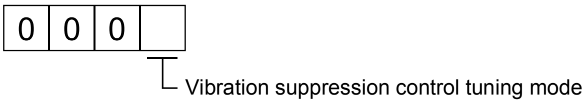

<table>
<tr><th>Setting</th><th>Vibration suppression control tuning mode</th><th>Automatically set parameter</th></tr>
<tr><td>0</td><td>Vibration suppression control OFF</td><td>(Note)</td></tr>
<tr><td>1</td><td>Vibration suppression control tuning mode (Advanced vibration suppression control)</td><td>Parameter No.PB19
Parameter No.PB20</td></tr>
<tr><td>2</td><td>Manual mode</td><td></td></tr>
</table>
Note. Parameter No.PB19 and PB20 are fixed to the initial values.
When this parameter is set to "□□□1", the tuning is completed after the predetermined number of positioning operations are executed for the predetermined period of time, and the setting changes to "□□□2". When the vibration suppression control tuning is not necessary, the setting changes to "□□□0". When this parameter is set to "□□□0", the initial values are set to the vibration suppression control - vibration frequency and vibration suppression control - resonance frequency. However, this does not operate when the servo off.</td><td>0000h</td><td></td><td></td></tr>
<tr><td>PB03</td><td></td><td>For manufacturer setting
Do not change this value by any means.</td><td>0000h</td><td></td><td></td></tr>
<tr><td>PB04</td><td>FFC</td><td>Feed forward gain
Set the feed forward gain. When the setting is 100%, the droop pulses during operation at constant speed are nearly zero. However, sudden acceleration/deceleration will increase the overshoot. As a guideline, when the feed forward gain setting is 100%, set 1s or more as the acceleration time constant up to the rated speed.</td><td>0</td><td>%</td><td>0
to
100</td></tr>
</table>

No.	Symbol	Name and function	Initial value	Unit	Setting range
PB05		For manufacturer setting Do not change this value by any means.	500		
PB06	GD2	Ratio of load inertia moment to servo motor inertia moment Used to set the ratio of the load inertia moment to the servo motor shaft inertia moment. When auto tuning mode 1 and interpolation mode is selected, the result of auto tuning is automatically used. (Refer to section 9.1.1) In this case, it varies between 0 and 100.0.	7.0	Multiplier (×1)	0 to 300.0
PB07	PG1	Model loop gain Set the response gain up to the target position. Increase the gain to improve track ability in response to the command. When auto turning mode 1,2 is selected, the result of auto turning is automatically used.	24	rad/s	1 to 2000
PB08	PG2	Position loop gain Used to set the gain of the position loop. Set this parameter to increase the position response to level load disturbance. Higher setting increases the response level but is liable to generate vibration and/or noise. When auto tuning mode 1,2 and interpolation mode is selected, the result of auto tuning is automatically used.	37	rad/s	1 to 1000
PB09	VG2	Speed loop gain Set the gain of the speed loop. Set this parameter when vibration occurs on machines of low rigidity or large backlash. Higher setting increases the response level but is liable to generate vibration and/or noise. When auto tuning mode 1,2 manual mode and interpolation mode is selected, the result of auto tuning is automatically used.	823	rad/s	20 to 50000
PB10	VIC	Speed integral compensation Used to set the integral time constant of the speed loop. Lower setting increases the response level but is liable to generate vibration and/or noise. When auto tuning mode 1,2 and interpolation mode is selected, the result of auto tuning is automatically used.	33.7	ms	0.1 to 1000.0
PB11	VDC	Speed differential compensation Used to set the differential compensation. Made valid when the proportion control (RY(n＋2)7) is switched on.	980		0 to 1000
PB12		For manufacturer setting Do not change this value by any means.	0		
PB13	NH1	Machine resonance suppression filter 1 Set the notch frequency of the machine resonance suppression filter 1. Setting parameter No.PB01 (adaptive tuning mode 1) to "□□□1" automatically changes this parameter. When the parameter No.PB01 setting is "□□□0", the setting of this parameter is ignored.	4500	Hz	100 to 4500

<table>
<tr><th>No.</th><th>Symbol</th><th>Name and function</th><th>Initial value</th><th>Unit</th><th>Setting range</th></tr>
<tr><td>PB14</td><td>NHQ1</td><td>Notch shape selection 1
Used to selection the machine resonance suppression filter 1.
0□□0
Notch depth selection
<table>
<tr><th>Setting</th><th>Depth</th><th>Gain</th></tr>
<tr><td>0</td><td>Deep</td><td>-40dB</td></tr>
<tr><td>1</td><td>to</td><td>-14dB</td></tr>
<tr><td>2</td><td></td><td>-8dB</td></tr>
<tr><td>3</td><td>Shallow</td><td>-4dB</td></tr>
</table>
Notch width selection
<table>
<tr><th>Setting</th><th>Width</th><th>α</th></tr>
<tr><td>0</td><td>Standard</td><td>2</td></tr>
<tr><td>1</td><td>to</td><td>3</td></tr>
<tr><td>2</td><td></td><td>4</td></tr>
<tr><td>3</td><td>Wide</td><td>5</td></tr>
</table>
Setting parameter No.PB01 (adaptive tuning mode 1) to "□□□1" automatically changes this parameter.
When the parameter No.PB01 setting is "□□□0", the setting of this parameter is ignored.</td><td>0000h</td><td></td><td>Refer to name and function column.</td></tr>
<tr><td>PB15</td><td>NH2</td><td>Machine resonance suppression filter 2
Set the notch frequency of the machine resonance suppression filter 2.
Set parameter No.PB16 (notch shape selection 2) to "□□□1" to make this parameter valid.</td><td>4500</td><td>Hz</td><td>100
to
4500</td></tr>
<tr><td>PB16</td><td>NHQ2</td><td>Notch shape selection 2
Select the shape of the machine resonance suppression filter 2.
0□□□
Machine resonance suppression filter 2 selection
0: Invalid
1: Valid
Notch depth selection
<table>
<tr><th>Setting</th><th>Depth</th><th>Gain</th></tr>
<tr><td>0</td><td>Deep</td><td>-40dB</td></tr>
<tr><td>1</td><td>to</td><td>-14dB</td></tr>
<tr><td>2</td><td></td><td>-8dB</td></tr>
<tr><td>3</td><td>Shallow</td><td>-4dB</td></tr>
</table>
Notch width selection
<table>
<tr><th>Setting</th><th>Width</th><th>α</th></tr>
<tr><td>0</td><td>Standard</td><td>2</td></tr>
<tr><td>1</td><td>to</td><td>3</td></tr>
<tr><td>2</td><td></td><td>4</td></tr>
<tr><td>3</td><td>Wide</td><td>5</td></tr>
</table></td><td>0000h</td><td></td><td>Refer to name and function column.</td></tr>
<tr><td>PB17</td><td></td><td>Automatic setting parameter
The value of this parameter is set according to a set value of parameter No.PB06 (Ratio of load inertia moment to servo motor inertia moment).</td><td></td><td></td><td></td></tr>
<tr><td>PB18</td><td>LPF</td><td>Low-pass filter
Set the low-pass filter.
Setting parameter No.PB23 (low-pass filter selection) to "□□0□" automatically changes this parameter.
When parameter No.PB23 is set to "□□1□", this parameter can be set manually.</td><td>3141</td><td>rad/s</td><td>100
to
18000</td></tr>
</table>

No.	Symbol	Name and function	Initial value	Unit	Setting range
PB19	VRF1	Vibration suppression control vibration frequency setting Set the vibration frequency for vibration suppression control to suppress low-frequency machine vibration, such as enclosure vibration. Setting parameter No.PB02 (vibration suppression control tuning mode) to "□□□1" automatically changes this parameter. When parameter No.PB02 is set to "□□□2", this parameter can be set manually.	100.0	Hz	0.1 to 100.0
PB20	VRF2	Vibration suppression control resonance frequency setting Set the resonance frequency for vibration suppression control to suppress low-frequency machine vibration, such as enclosure vibration. Setting parameter No.PB02 (vibration suppression control tuning mode) to "□□□1" automatically changes this parameter. When parameter No.PB02 is set to "□□□2", this parameter can be set manually.	100.0	Hz	0.1 to 100.0
PB21		For manufacturer setting	0.00		
PB22		Do not change this value by any means.	0.00		
PB23	VFBF	Low-pass filter selection (Refer to section 10.5.) Select the low-pass filter. 0 0 □ 0 Low-pass filter selection 0: Automatic setting 1: Manual setting (parameter No.PB18 setting)	0000h		Refer to name and function column.
PB24	*MVS	Slight vibration suppression control selection Select the slight vibration suppression control. When parameter No.PA08 (auto tuning mode) is set to "□□□3", slight vibration suppression control is made valid. 0 0 0 □ Slight vibration suppression control selection 0: Invalid 1: Valid	0000h		Refer to name and function column.
PB25		For manufacturer setting Do not change this value by any means.	0000h		
PB26	*CDP	Gain switching selection Select the gain switching condition. (Refer to section 10.6.) 0 0 □ □ Gain switching selection The gain is switched depending on the setting value of parameter No.PB29 to PB34 with the following conditions. 0: Invalid 1: Gain switching (RY(n+2)8) 2: Command frequency (Parameter No.PB27 setting) 3: Droop pulse value (Parameter No.PB27 setting) 4: Servo motor speed (Parameter No.PB27 setting) Gain switching condition 0: Valid at more than condition (Valid when gain switching (RY(n+2)8) is ON) 1: Valid at less than condition (Valid when gain switching (RY(n+2)8) is OFF)	0000h		Refer to name and function column.
PB27	CDL	Gain switching condition Used to set the value of gain switching condition (command frequency, droop pulses, servo motor speed) selected in parameter No.PB26. The set value unit changes with the changing condition item. (Refer to section 10.6.)	10	kpps pulse r/min	0 to 9999

No.	Symbol	Name and function	Initial value	Unit	Setting range
PB28	CDT	Gain switching time constant Used to set the time constant at which the gains will change in response to the conditions set in parameters No.PB26 and PB27. (Refer to section 10.6.)	1	ms	0 to 100
PB29	GD2B	Gain switching ratio of load inertia moment to servo motor inertia moment Used to set the ratio of load inertia moment to servo motor inertia moment when gain switching is valid. This parameter is made valid when the auto tuning is invalid (parameter No. PA08: □□□3).	7.0	Multiplier (×1)	0 to 300.0
PB30	PG2B	Gain switching position loop gain Set the position loop gain when the gain switching is valid. This parameter is made valid when the auto tuning is invalid (parameter No. PA08: □□□3).	37	rad/s	1 to 2000
PB31	VG2B	Gain switching speed loop gain Set the speed loop gain when the gain switching is valid. This parameter is made valid when the auto tuning is invalid (parameter No. PA08: □□□3). Note. The setting range of 50000 applies to the servo amplifier whose software version is A3 or later. The setting range of the servo amplifier whose software version is older than A3 is 20 to 20000. When the software version of MR Configurator is A3 or earlier, 20001 or more cannot be set. Use the display/operation section of the servo amplifier to set 20001 or more.	823	rad/s	20 to 20000
PB32	VICB	Gain switching speed integral compensation Set the speed integral compensation when the gain switching is valid. This parameter is made valid when the auto tuning is invalid (parameter No. PA08: □□□3).	33.7	ms	0.1 to 5000.0
PB33	VRF1B	Gain switching vibration suppression control vibration frequency setting Set the vibration frequency for vibration suppression control when the gain switching is valid. This parameter is made valid when the parameter No.PB02 setting is "□□□2" and the parameter No.PB26 setting is "□□□1". When using the vibration suppression control gain switching, always execute the changing after the servo motor has stopped.	100.0	Hz	0.1 to 100.0
PB34	VRF2B	Gain switching vibration suppression control resonance frequency setting Set the resonance frequency for vibration suppression control when the gain switching is valid. This parameter is made valid when the parameter No.PB02 setting is "□□□2" and the parameter No.PB26 setting is "□□□1". When using the vibration suppression control gain switching, always execute the changing after the servo motor has stopped.	100.0	Hz	0.1 to 100.0
PB35		For manufacturer setting Do not change this value by any means.	0.00		
PB36			0.00		
PB37			100		
PB38			0		
PB39			0		
PB40			0		
PB41			1125		
PB42			1125		
PB43			0004h		
PB44			0000h		
PB45			0000h		

16.11.3 Extension setting parameters (No.PC□□)

(1) Parameter list

No.	Symbol	Name	Initial value	Unit
PC01		For manufacturer setting	0000h	
PC02	*ZTY	Home position return type	0000h	
PC03	*ZDIR	Home position return direction	0001h	
PC04	ZRF	Home position return speed	500	r/min
PC05	CRF	Creep speed	10	r/min
PC06	ZST	Home position shift distance	0	pulse
PC07		Not used in indexer positioning operation.	0	
PC08			1000	
PC09			100	
PC10			15.0	
PC11	CRP	Rough match output range	0	pulse
PC12	JOG	Jog speed	100	r/min
PC13		Not used in indexer positioning operation.	0	
PC14	*BKC	Backlash compensation	0	pulse
PC15		For manufacturer setting	0000h	
PC16	MBR	Electromagnetic brake sequence output	100	ms
PC17		Not used in indexer positioning operation.	50	
PC18	*BPS	Alarm history clear	0000h	
PC19	*ENRS	Encoder output pulse selection	0000h	
PC20	*SNO	Station number setting	0	station
PC21	*SOP	RS-422 communication function selection	0000h	
PC22	*COP1	Function selection C-1	0000h	
PC23		For manufacturer setting	0000h	
PC24		Not used in indexer positioning operation.	0000h	
PC25		For manufacturer setting	0000h	
PC26	*COP5	Function selection C-5	0000h	
PC27		For manufacturer setting	0000h	
PC28		Not used in indexer positioning operation.	0000h	
PC29		For manufacturer setting	0000h	
PC30	*DSS	Remote register-based position/speed specifying system selection	0000h	
PC31		Not used in indexer positioning operation.	0	
PC32				
PC33			0	
PC34				
PC35	TL2	Internal torque limit 2	100.0	%
PC36		For manufacturer setting	0000h	
PC37		Not used in indexer positioning operation.	0	
PC38				
PC39			0	
PC40				
PC41		For manufacturer setting	0000h	
PC42			0000h	
PC43			0000h	
PC44			0000h	
PC45	*COP9	Function selection C-9	0000h	
PC46	*STN	Indexer positioning operation number of stations/rotation	0000h	
PC47	PSST	Indexer positioning operation station home position shift distance	0000h	pulse
PC48		For manufacturer setting	0000h	

No.	Symbol	Name and function	Initial value	Unit
PC49		For manufacturer setting	0000h	
PC50	*COPA	Function selection C-A	0000h	Refer to name and function column.

(2) Detail list

No.	Symbol	Name and function	Initial value	Unit	Setting range
PC01		For manufacturer setting Do not change this value by any means.	0000h		
PC02	*ZTY	Home position return type Used to set the home position return system. (Refer to section 5.6.) Parameter No.PC02 0 0 0 ☐ Home position return method 0: 1: 2: 3: 4: 5: Not used in indexer postioning operation. 6: 7: 8: 9: A: C: Torque limit changing dog type D: Torque limit changing data setting type	0000h		Refer to name and function column.
PC03	*ZDIR	Home position return direction Used to set the home position return direction. Parameter No.PC03 0 0 0 ☐ Home position return direction 0: Station No. increment direction 1: Station No. decrement direction	0001h		Refer to name and function column.
PC04	ZRF	Home position return speed Used to set the servo motor speed for home position return. (Refer to section 16.9.)	500	r/min	0 to permissible speed
PC05	CRF	Creep speed Used to set the creep speed after proximity dog detection. (Refer to section 16.9.)	10	r/min	0 to permissible speed
PC06	ZST	Home position shift distance Used to set the shift distance starting at the Z-phase pulse detection position inside the encoder. (Refer to section 16.9.)	0	pulse	0 to 65535
PC07		Not used in indexer positioning operation. Do not change the parameter.	0		
PC08			1000		
PC09			100		
PC10			15.0		
PC11	CRP	Rough match output range Used to set the command remaining distance range where the rough match (RXn2) is output.	0	$\times 10^{STM}\mu m$	0 to 65535
PC12	JOG	Jog speed Used to set the jog speed command.	100	r/min	0 to permissible speed

No.	Symbol	Name and function	Initial value	Unit	Setting range
PC13		Not used in indexer positioning operation. Do not change the parameter.	0		
PC14	*BKC	Backlash compensation Used to set the backlash compensation made when the command direction is reversed. This function compensates for the number of backlash pulses in the opposite direction to the home position return direction. For the home position ignorance (servo-on position as home position), this function compensates for the number of backlash pulses in the opposite direction to the first rotating direction after establishing the home position by switching ON the servo-on (RYn0). In the absolute position detection system, this function compensates for the backlash pulse count in the direction opposite to the operating direction at power-on.	0	pulse	0 to 32000
PC15		For manufacturer setting Do not change this value by any means.	0000h		
PC16	MBR	Electromagnetic brake sequence output Used to set the delay time (Tb) between when the electromagnetic brake interlock (MBR) switches off and when the base circuit is shut off.	100	ms	0 to 1000
PC17		Not used in indexer positioning operation. Do not change the parameter.	50		
PC18	*BPS	Alarm history clear Used to clear the alarm history. 0 0 0 □ Alarm history clear 0: Invalid 1: Valid When alarm history clear is made valid, the alarm history is cleared at next power-on. After the alarm history is cleared, the setting is automatically made invalid (reset to 0).	0000h		Refer to name and function column.
PC19	*ENRS	Encoder output pulse selection Use to select the encoder output pulse direction and encoder output pulse setting. 0 0 □ □ Encoder output pulse phase changing Changes the phases of A, B-phase encoder output pulses. 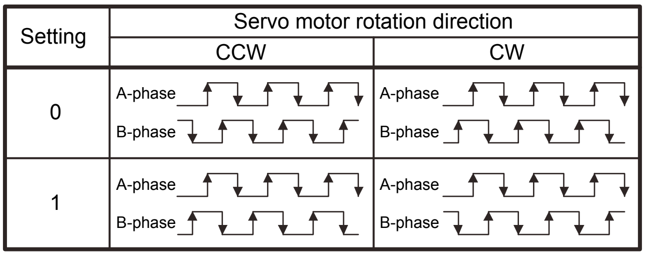 Setting / Servo motor rotation direction: CCW, CW 0: A-phase, B-phase (CCW); A-phase, B-phase (CW) 1: A-phase, B-phase (CCW); A-phase, B-phase (CW) Encoder output pulse setting selection (refer to parameter No.PA15). 0: Output pulse designation 1: Division ratio setting 2: Outputs the encoder pulse without processing it.	0000h		Refer to name and function column.

No.	Symbol	Name and function	Initial value	Unit	Setting range
PC20	*SNO	Station number setting Used to specify the station number of servo amplifier for RS-422 communication. Always set one station to one axis of servo amplifier. If one station number is set to two or more stations, normal communication cannot be made.	0	station	0 to 31
PC21	*SOP	RS-422 communication function selection Select the communication I/F and select the RS-422 communication conditions. 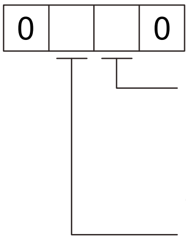 RS-422 communication baud rate selection 0: 9600 [bps] 1: 19200 [bps] 2: 38400 [bps] 3: 57600 [bps] 4: 115200[bps] RS-422 communication response delay time 0: Invalid 1: Valid, reply sent after delay time of 800 μs or more	0000h		Refer to name and function column.
PC22	*COP1	Function selection C-1 Select the encoder cable communication system selection. 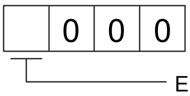 Encoder cable communication system selection 0: Two-wire type 1: Four-wire type Incorrect setting will result in an encoder alarm 1 (A16) or encoder alarm 2 (A20).	0000h		Refer to the name and function field.
PC23		For manufacturer setting Do not change this value by any means.	0000h		
PC24		Not used in indexer positioning operation. Do not change the parameter.	0000h		
PC25		For manufacturer setting Do not change this value by any means.	0000h		
PC26	*COP5	Function selection C-5 Select the stroke limit warning (A99). 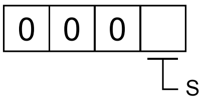 Stroke limit warning (A99) selection 0: Valid 1: Invalid When this parameter is set to "1", A99 will not occur if the forward rotation stroke end (LSP) or reverse rotation stroke end (LSN) turns OFF.	0000h		Refer to name and function column.
PC27		For manufacturer setting Do not change this value by any means.	0000h		
PC28		Not used in indexer positioning operation. Do not change the parameter.	0000h		

<table>
<tr><th>No.</th><th>Symbol</th><th>Name and function</th><th>Initial value</th><th>Unit</th><th>Setting range</th></tr>
<tr><td>PC29</td><td></td><td>For manufacturer setting
Do not change this value by any means.</td><td>0000h</td><td></td><td></td></tr>
<tr><td>PC30</td><td>*DSS</td><td>Remote register-based position/speed specifying system selection
This parameter is made valid when Position/speed specification selection (RY(n＋2)A) is turned ON with 2 stations occupied. Select how to receive the position command and speed command.
When 1 station is occupied, selection of "0010" will result in a parameter error.
0 0 □ 0
<table><tr><th>Setting</th><th>Position command</th><th>Speed command</th></tr><tr><td>0</td><td>Set the station No.</td><td>Specify the servo point table No.</td></tr><tr><td>1</td><td></td><td>Specify the servo motor speed. (Note)</td></tr></table>
Note. In the case, always set the acceleration/deceleration time constant in the point table No.1.</td><td>0000h</td><td></td><td>Refer to name and function column.</td></tr>
<tr><td>PC31</td><td></td><td>Not used in indexer positioning operation.
Do not change the parameter.</td><td>0</td><td></td><td></td></tr>
<tr><td>PC32</td><td></td><td></td><td></td><td></td><td></td></tr>
<tr><td>PC33</td><td></td><td></td><td>0</td><td></td><td></td></tr>
<tr><td>PC34</td><td></td><td></td><td></td><td></td><td></td></tr>
<tr><td>PC35</td><td>TL2</td><td>Internal torque limit 2
Set this parameter to limit servo motor torque on the assumption that the maximum torque is 100[%].
When 0 is set, torque is not produced.</td><td>100.0</td><td>%</td><td>0
to
100.0</td></tr>
<tr><td>PC36</td><td></td><td>For manufacturer setting
Do not change this value by any means.</td><td>0000h</td><td></td><td></td></tr>
<tr><td>PC37</td><td></td><td>Not used in indexer positioning operation.
Do not change the parameter.</td><td>0</td><td></td><td></td></tr>
<tr><td>PC38</td><td></td><td></td><td></td><td></td><td></td></tr>
<tr><td>PC39</td><td></td><td></td><td>0</td><td></td><td></td></tr>
<tr><td>PC40</td><td></td><td></td><td></td><td></td><td></td></tr>
<tr><td>PC41</td><td></td><td>For manufacturer setting
Do not change this value by any means.</td><td>0000h</td><td></td><td></td></tr>
<tr><td>PC42</td><td></td><td></td><td>0000h</td><td></td><td></td></tr>
<tr><td>PC43</td><td></td><td></td><td>0000h</td><td></td><td></td></tr>
<tr><td>PC44</td><td></td><td></td><td>0000h</td><td></td><td></td></tr>
<tr><td>PC45</td><td>*COP9</td><td>Function selection C-9
Select the manual operation mode.
0 0 0 □
Manual operation for indexer positioning operation selection (Refer to section 16.7.3)
0: Indexer JOG operation
1: JOG operation</td><td>0000h</td><td></td><td>0000h
to
0001h</td></tr>
</table>

<table>
<tr><th>No.</th><th>Symbol</th><th>Name and function</th><th>Initial value</th><th>Unit</th><th>Setting range</th></tr>
<tr><td>PC46</td><td>*STN</td><td>Indexer positioning operation number of stations/rotation
Set the number of stations (dividing number) per machine rotation. When the setting value is 2 or lower, the number of stations is set to 2.
<table>
<tr><th>Setting value</th><th>Number of stations</th></tr>
<tr><td>0000</td><td>2</td></tr>
<tr><td>0001</td><td>2</td></tr>
<tr><td>0002</td><td>2</td></tr>
<tr><td>0003</td><td>3</td></tr>
<tr><td>0004</td><td>4</td></tr>
<tr><td>.
.
.</td><td>.
.
.</td></tr>
<tr><td>00FF</td><td>255</td></tr>
</table></td><td>0000h</td><td>Number of stations</td><td>0000h
to
00FFh</td></tr>
<tr><td>PC47</td><td>PSST</td><td>Indexer positioning operation station home position shift distance
This parameter is available only in the absolute position detection system.
Set the distance for shifting the home position toward the set home position in number of pulses.
This shift distance does not become valid immediately after the home position setting. It becomes valid after turning off and then on the power.
When the sift distance is larger than the in-position range, the in position (RXn1) does not turn on at power-on.
Set the number of pulses to be shifted after converting it into hexadecimal.
The setting range is from －2000 to 2000 pulse.</td><td>0000h</td><td>pulse</td><td>Refer to name and function column</td></tr>
<tr><td>PC48</td><td></td><td>For manufacturer setting</td><td>0000h</td><td></td><td></td></tr>
<tr><td>PC49</td><td></td><td>Do not change this value by any means.</td><td>0000h</td><td></td><td></td></tr>
<tr><td>PC50</td><td>*COPA</td><td>Function selection C-A
□ 0 0 0
CC-Link communication error (A8D) extended function selection
0: No extended function
1: CC-Link communication error (A8D) detection delay
Use parameter No.PD25 to set how long to delay the occurrence timing of CC-Link communication error (A8D).

This parameter is available with servo amplifiers with software version A8 or later.
When this parameter is set using MR Configurator with software version C5 or earlier, the parameter name is not displayed. However, the setting value is changeable. Follow the instructions in this Instruction Manual to set the value.</td><td>0000h</td><td></td><td>Refer to the Name and function column.</td></tr>
</table>

(3) Alarm history clear

The alarm history can be confirmed by using the MR Configurator. The servo amplifier stores last six alarms from when its power is switched on first. To control alarms which will occur during operation, clear the alarm history using parameter No.PC18 (alarm history clear) before starting operation. Clearing the alarm history automatically returns to "□□□0".

This parameter is made valid by switching power off, then on after setting.

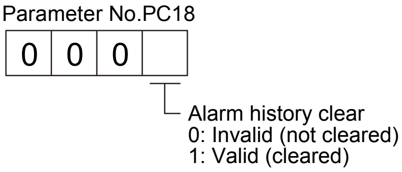

(4) Rough match output

Rough match (RXn2) is output when the command remaining distance reaches the value set in parameter No.PC11 (rough match output range). The setting range is 0 to 65535 [pulse].

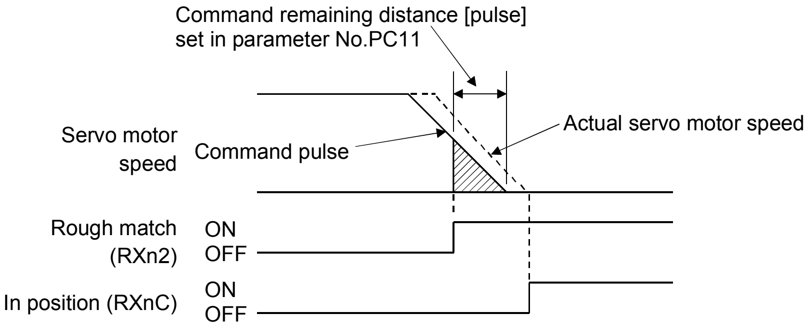

16.11.4 I/O setting parameters (No.PD□□)

(1) Parameter list

No.	Symbol	Name	Initial value	Unit
PD01	*DIA1	Input signal automatic ON selection 1	0000h	
PD02		For manufacturer setting	0000h	
PD03		Not used in indexer positioning operation.	0000h	
PD04			0000h	
PD05		For manufacturer setting	0000h	
PD06		Not used in indexer positioning operation.	002Bh	
PD07			000Ah	
PD08			000Bh	
PD09			0002h	
PD10			0003h	
PD11			0024h	
PD12			0C00h	
PD13		For manufacturer setting	0000h	
PD14		Not used in indexer positioning operation.	0800h	
PD15		For manufacturer setting	0000h	
PD16	*DIAB	Input polarity selection	0000h	
PD17		For manufacturer setting	0000h	
PD18			0000h	
PD19	*DIF	Response level setting	0002h	
PD20	*DOP1	Function selection D-1	0010h	
PD21		For manufacturer setting	0000h	
PD22		Not used in indexer positioning operation.	0000h	
PD23		For manufacturer setting	0000h	
PD24	*DOP5	Function selection D-5	0000h	
PD25	A8DT	CC-Link communication error (A8D) detection time	0000h	ms
PD26	TLT	Indexer positioning operation torque limit delay time	0000h	
PD27		For manufacturer setting	0064h	
PD28			0000h	
PD29			0000h	
PD30			0000h	

(2) Detail list

<table>
<tr><th>No.</th><th>Symbol</th><th>Name and function</th><th>Initial value</th><th>Unit</th><th>Setting range</th></tr>
<tr><td>PD01</td><td>*DIA1</td><td>Input signal automatic ON selection 1
Select the input devices to be automatically turned ON.
▧ part is for manufacturer setting. Do not set the value by any means.
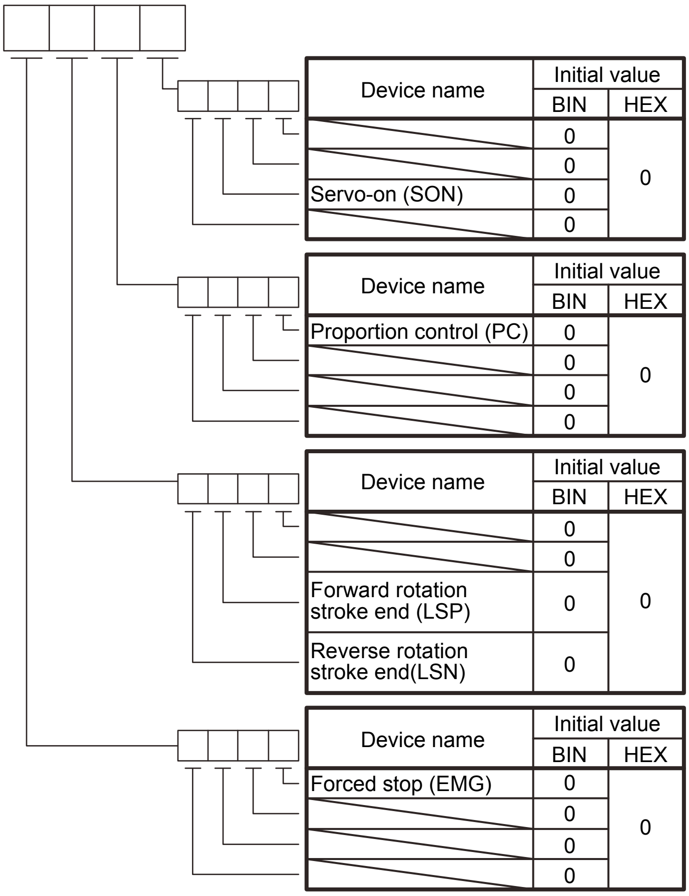
<table>
<tr><th rowspan="2">Device name</th><th colspan="2">Initial value</th></tr>
<tr><th>BIN</th><th>HEX</th></tr>
<tr><td></td><td>0</td><td rowspan="4">0</td></tr>
<tr><td></td><td>0</td></tr>
<tr><td>Servo-on (SON)</td><td>0</td></tr>
<tr><td></td><td>0</td></tr>
</table>
<table>
<tr><th rowspan="2">Device name</th><th colspan="2">Initial value</th></tr>
<tr><th>BIN</th><th>HEX</th></tr>
<tr><td>Proportion control (PC)</td><td>0</td><td rowspan="4">0</td></tr>
<tr><td></td><td>0</td></tr>
<tr><td></td><td>0</td></tr>
<tr><td></td><td>0</td></tr>
</table>
<table>
<tr><th rowspan="2">Device name</th><th colspan="2">Initial value</th></tr>
<tr><th>BIN</th><th>HEX</th></tr>
<tr><td></td><td>0</td><td rowspan="4">0</td></tr>
<tr><td></td><td>0</td></tr>
<tr><td>Forward rotation stroke end (LSP)</td><td>0</td></tr>
<tr><td>Reverse rotation stroke end(LSN)</td><td>0</td></tr>
</table>
<table>
<tr><th rowspan="2">Device name</th><th colspan="2">Initial value</th></tr>
<tr><th>BIN</th><th>HEX</th></tr>
<tr><td>Forced stop (EMG)</td><td>0</td><td rowspan="4">0</td></tr>
<tr><td></td><td>0</td></tr>
<tr><td></td><td>0</td></tr>
<tr><td></td><td>0</td></tr>
</table>
BIN 0: Used for CC-Link or an external input signal
BIN 1: Automatic ON

For example, to turn ON SON, the setting is "□C□□".</td><td>0000h</td><td></td><td>Refer to name and function column.</td></tr>
<tr><td>PD02</td><td></td><td>For manufacturer setting
Do not change this value by any means.</td><td>0000h</td><td></td><td></td></tr>
<tr><td>PD03</td><td rowspan="2"></td><td rowspan="2">Not used in indexer positioning operation.
Do not change the parameter.</td><td>0000h</td><td rowspan="2"></td><td rowspan="2"></td></tr>
<tr><td>PD04</td><td>0000h</td></tr>
<tr><td>PD05</td><td></td><td>For manufacturer setting
Do not change this value by any means.</td><td>0000h</td><td></td><td></td></tr>
<tr><td>PD06</td><td rowspan="7"></td><td rowspan="7">Not used in indexer positioning operation.
Do not change the parameter.</td><td>002Bh</td><td rowspan="7"></td><td rowspan="7"></td></tr>
<tr><td>PD07</td><td>000Ah</td></tr>
<tr><td>PD08</td><td>000Bh</td></tr>
<tr><td>PD09</td><td>0002h</td></tr>
<tr><td>PD10</td><td>0003h</td></tr>
<tr><td>PD11</td><td>0024h</td></tr>
<tr><td>PD12</td><td>0C00h</td></tr>
<tr><td>PD13</td><td></td><td>For manufacturer setting
Do not change this value by any means.</td><td>0000h</td><td></td><td></td></tr>
<tr><td>PD14</td><td></td><td>Not used in indexer positioning operation.
Do not change the parameter.</td><td>0800h</td><td></td><td></td></tr>
</table>

No.	Symbol	Name and function	Initial value	Unit	Setting range
PD15		For manufacturer setting Do not change this value by any means.	0000h		
PD16	*DIAB	Input polarity selection Used to set the proximity dog input polarity. (Refer to section 5.6.) 0 0 0 □ Proximity dog input polarity 0: OFF indicates detection of the dog 1: ON indicates detection of the dog	0000h		Refer to name and function column.
PD17		For manufacturer setting Do not change this value by any means.	0000h		
PD18			0000h		
PD19	*DIF	Response level setting Used to select the input. 0 0 0 □ Input filter If external input signal causes chattering due to noise, etc., input filter is used to suppress it. 0: None 1: 0.888[ms] 2: 1.777[ms] 3: 2.660[ms] 4: 3.555[ms] 5: 4.444[ms]	0002h		Refer to name and function column.
PD20	*DOP1	Function selection D-1 Select the stop processing at forward rotation stroke end (LSN)/reverse rotation stroke end (LSN) OFF and the base circuit status at reset (RY(n＋1)A or RY(n＋3)A) ON. 0 0 □ □ Stopping method for Forward rotation stroke end (LSP) off or Reverse rotation stroke end (LSN) off 0: Sudden stop (home position erased) 1: Slow stop (home position erased) 2: Slow stop (Setting contents is the same as for "1".) 3: Sudden stop (Setting contents is the same as for "0".) Even in this case, when LSP or LSN is detected, home position return is required again before executing automatic operation. However, in the absolute position detection system (parameter No.PA03:□□□1), the home position return completion (ZP) can be turned on by turning on the servo-on. In the case, executing another home position. Selection of base circuit status at reset (RY(n+1)A or RY(n+3)A)ON 0: Base circuit not switched off 1: Base circuit switched off	0010h		Refer to name and function column.
PD21		For manufacturer setting Do not change this value by any means.	0000h		
PD22		Not used in indexer positioning operation. Do not change the parameter.	0000h		
PD23		For manufacturer setting Do not change this value by any means.	0000h		

No.	Symbol	Name and function	Initial value	Unit	Setting Range
PD24	*DOP5	Function selection D-5 Select the output status of the warning (RXnA). 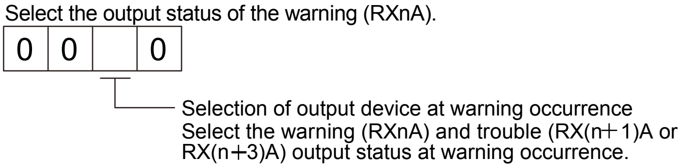 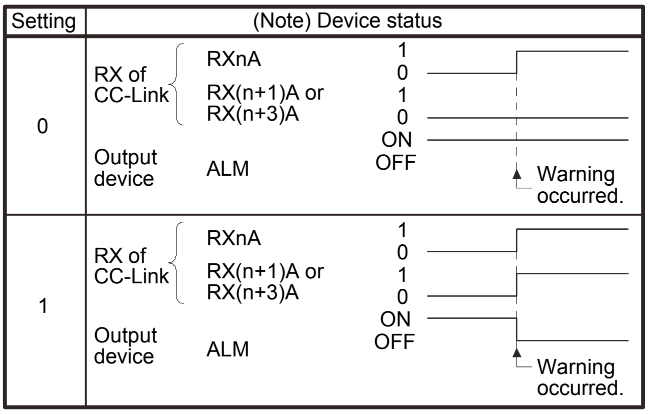 Note. 0: OFF 1: ON	0000h		
PD25	A8DT	CC-Link communication error (A8D) detection time When the "CC-Link communication error (A8D) detection delay" is selected with parameter No.PC50, this parameter is valid. If parameter No.PC50 is "0000h", it is 10ms. Convert a decimal value to a hexadecimal value for input. The setting range is up to 1000 ms. A set value is limited within the setting range. For example) If "03E8h" is set, the set value becomes 1000ms. The converted decimal value of "1388h" is 10000ms, but it is limited to 1000ms, which is the upper limit of the setting range. ⚠ CAUTION ・If CC-Link communication error (A8D) does not have to be detected, use the communication time-out detection time in the initial setting. When you change the setting value, do not set an unnecessarily long time period. Doing so interferes swift stop operation at an occurrence of CC-Link communication error (A8D). This parameter is available with servo amplifiers with software version A8 or later. When this parameter is set using MR Configurator with software version C5 or earlier, the parameter name is not displayed. However, the setting value is changeable. Follow the instructions in this Instruction Manual to set the value.	0000h	ms	0000h to 03E8h
PD26	TLT	Indexer positioning operation torque limit delay time Set the delay time from when the in position (RXn1) turns on until the internal torque limit 2 (parameter No.PC35) becomes effective. Set the delay time after converting it into hexadecimal. The setting range is from 0 to 1000 ms.	0064h	ms	Refer to name and function column.
PD27		For manufacturer setting Do not change this value by any means.	0000h		
PD28			0000h		
PD29			0000h		
PD30			0000h		

(3) Stop method for forward rotation stroke end (LSP) off or reverse rotation stroke end (LSN) off

The setting of the first digit of parameter No.PD20 enables to select a stopping method of the servo motor when the forward rotation stroke end (LSP) or reverse rotation stroke end (LSN) turns off.

Parameter No.PD20

Stop method for forward rotation stroke end (LSP) off or reverse rotation stroke end (LSN) off
0:Sudden stop (home position erased)
1:Slow stop (home position erased)
2:Slow stop (Setting contents is the same as for “1”.)
3:Sudden stop (Setting contents is the same as for “0”.)

Setting value of parameter No.PD20	Operation status		Remarks
	When rotating at constant speed	When decelerating to stop	
□□□0 (Initial value) · □□□3	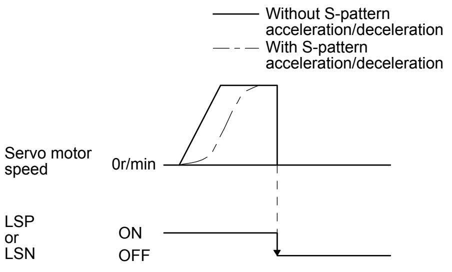	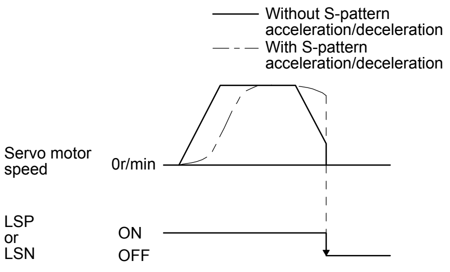	Clears droop pulses and stops. Erases the home position. A difference occurs between the command position and the current position. Execute a home position return again.
□□□1 · □□□2	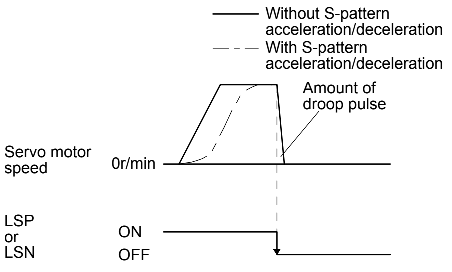	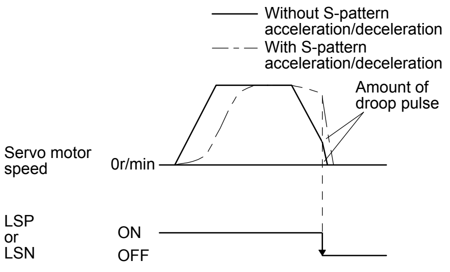	Moves for the amount of droop pulse and stops. Erases the home position. A difference occurs between the command position and the current position. Execute a home position return again.

16.12 Troubleshooting

16.12.1 Troubleshooting at start-up

CAUTION

- Excessive adjustment or change of parameter setting must not be made as it will make operation instable.

POINT

- Using the MR Configurator, you can refer to unrotated servo motor reasons, etc.

The following faults may occur at start-up. If any of such faults occurs, take the corresponding action.

No.	Occurring stage	Fault	Investigation	Possible cause	Reference
1	Power on	· The 7-segment LED display is not lit. · 7-segment LED display flickers.	Not improved if connectors CN6, CN2 and CN3 are disconnected.	1. Power supply voltage fault 2. Servo amplifier is faulty.	
			Improved when connectors CN6 is disconnected.	Power supply of CN6 cabling is shorted.	
			Improved when connector CN2 is disconnected.	1. Power supply of encoder cabling is shorted. 2. Encoder is faulty.	
			Improved when connector CN3 is disconnected.	Power supply of CN3 cabling is shorted.	
		Alarm occurs.	Remove cause.		Section 16.12.4
2	Switch on servo-on	Alarm occurs.	Remove cause.		Section 16.12.4
		Servo motor shaft is not servo-locked (is free).	1. Check the display to see if the servo amplifier is ready to operate. 2. Check the external I/O signal indication to see if the servo-on is on.	1. Servo-on is not switched on. (Wiring mistake) 2. Interface power supply (24 V DC) is not supplied.	Section 8.5.4
3	Gain adjustment	Rotation ripples (speed fluctuations) are large at low speed.	Make gain adjustment in the following procedure. 1. Increase the auto tuning response level. 2. Repeat acceleration and deceleration three or four times to complete auto tuning.	Gain adjustment fault	Chapter 9
		Large load inertia moment causes the servo motor shaft to oscillate side to side.	If the servo motor can be driven safely, repeat acceleration and deceleration three or four times to complete auto tuning.	Gain adjustment fault	Chapter 9
4	Cyclic operation	Position shift occurs	Confirm the command position, current position, cumulative feedback pulses and actual servo motor position.	Pulse counting error, etc. due to noise.	

16.12.2 State at error occurrence

An error occurring during operation will result in any of the statuses indicated in the following table.

Error location	Description	Operation mode	
		Test operation	CC-Link operation
Servo side alarm occurrence	Servo operation	Stop	Stop
	CC-Link data communication	Continued	Continued
CC-Link communication error	Servo operation	Stop	Stop
	CC-Link data communication	Stop	Stop
Programmable controller error/STOP	Servo operation	Continued	Stop
	CC-Link data communication	Stop	Stop
Servo side warning occurrence	Servo operation	Stop	Continued
	CC-Link data communication	Continued	Continued

16.12.3 CC-Link communication error

This section gives the definitions of the indications given in the communication alarm display section.
The servo amplifier has four LED indications.

L.RUN : Lit at normal receive of refresh data. Extinguished when data is not received for a given period of time.
SD : Lit when send data is "0".
RD : Lit when the carrier of receive data is detected.
L.ERR : Lit when the data addressed to the host is in CRC or abort error.

(Note) Communication alarm display LED				Error description
L.RUN	SD	RD	L.ERR	
○	◎	◎	◎	Normal communication is made, but a CRC error sometimes occurs due to noise.
○	◎	◎	●	Normal communication
○	◎	●	◎	Hardware error
○	◎	●	●	Hardware error
○	●	◎	◎	Receive data results in CRC error, disabling a response.
○	●	◎	●	Data does not reach the host.
○	●	●	◎	Hardware error
○	●	●	●	Hardware error
●	◎	◎	◎	Polling response is made, but refresh receive is in CRC error.
●	◎	◎	●	Hardware error or the switch for manufacturer setting (SW2) is changed.
●	◎	●	◎	Hardware error
●	◎	●	●	Hardware error
●	●	◎	◎	Data addressed to the host resulted in CRC error.
●	●	◎	●	Data does not reach the host, or the data addressed to the host cannot be received due to noise.
●	●	●	◎	Hardware error
●	●	●	○	Baud rate setting illegal
●	●	○	○	Station number setting illegal
●	○	○	◎	Baud rate or station number setting changed midway (ERROR flickers for about 4s)
●	●	●	●	Data cannot be received due to power-off, power supply failure, open cable, etc. WDT error occurrence (hardware fault)

Note. ○ : Lit ● : Extinguished ◎ : Flicker

16.12.4 When alarm or warning has occurred

POINT

- As soon as an alarm occurs, make the servo-off status and interrupt the main circuit power.
- Parameter error (A37) and warnings are not recorded in the alarm history.

If any alarm or warning has occurred, refer to (2) or (3) of this section. If a trouble with no alarm or warning has occurred, refer to 16.12.6 to remove the cause.

(1) Alarms and warning list

When an error occurs during operation, the corresponding alarm or warning is displayed. If any alarm or warning has occurred, refer to (2), (3) in this section and take the appropriate action. When an alarm occurs, ALM turns off.

After its cause has been removed, the alarm can be deactivated in any of the methods marked ○ in the alarm deactivation column.

	Display	Name	Alarm deactivation		
			Power OFF→ON	(Note 3) MR Configurator parameter unit	(Note 2) Alarm reset (RES)
Alarms	A10	Undervoltage	○	○	○
	A12	Memory error 1 (RAM)	○		
	A13	Clock error	○		
	A15	Memory error 2 (EEP-ROM)	○		
	A16	Encoder error 1 (At power on)	○		
	A17	Board error	○		
	A19	Memory error 3 (Flash-ROM)	○		
	A1A	Motor combination error	○		
	A20	Encoder error 2 (during runtime)	○		
	A21	Encoder error 3 (during runtime)	○		
	A24	Main circuit error	○	○	○
	A25	Absolute position erase	○		
	A30	Regenerative error	(Note 1)○	(Note 1)○	(Note 1)○
	A31	Overspeed	○	○	○
	A32	Overcurrent	○		
	A33	Overvoltage	○	○	○
	A37	Parameter error	○		
	A45	Main circuit device overheat	(Note 1)○	(Note 1)○	(Note 1)○
	A46	Servo motor overheat	(Note 1)○	(Note 1)○	(Note 1)○
	A47	Cooling fan alarm	○		
	A50	Overload 1	(Note 1)○	(Note 1)○	(Note 1)○
	A51	Overload 2	(Note 1)○	(Note 1)○	(Note 1)○
	A52	Error excessive	○	○	○
	A61	Operation alarm	○	○	○
	A8A	Serial communication time-out error	○	○	○
	A8D	CC-Link communication error	○	○	○
	A8E	Serial communication error	○	○	○
	888	Watchdog	○		

	Display	Name
Warnings	A90	Home positioning incomplete warning
	A92	Open battery cable warning
	A96	Home position setting error
	A97	Next station warning
	A99	Stroke limit warning
	A9D	CC-Link warning 1
	A9E	CC-Link warning 2
	A9F	Battery warning
	AE0	Excessive regeneration warning
	AE1	Overload warning 1
	AE3	Absolute position counter warning
	AE6	Servo forced stop warning
	AE8	Cooling fan speed reduction warning
	AE9	Main circuit off warning
	AEC	Overload warning 2
	AED	Output watt excess warning

Note 1. Deactivate the alarm about 30 minutes of cooling time after removing the cause of occurrence.

2. Turns on RY(n＋1)A or RY(n＋3)A.

3. Clicking the "Alarm reset" button on the "Alarm display" screen of MR Configurator allows an alarm to be deactivated. Pressing the "STOP RESET" key of the parameter unit allows an alarm to be deactivated.

(2) Remedies for alarms

⚠CAUTION

- When an alarm occurs, reset the alarm after removing the cause and ensuring safety. Then, restart the operation. Otherwise, injury may occur.
- If an absolute position erase (A25) occurs, be sure to set the home position again. Not doing so may cause unexpected operation.
- As soon as an alarm occurs, turn off Servo-on (RYn0) and power off.

POINT

- When any of the following alarms has occurred, do not deactivate the alarm and resume operation repeatedly. To do so will cause the servo amplifier/servo motor to fail. Remove the cause of occurrence, and leave a cooling time of 30 minutes or longer before resuming operation.
  - Regenerative error (A30)
  - Main circuit device overheat (A45)
  - Servo motor overheat (A46)
  - Overload 1 (A50)
  - Overload 2 (A51)
- For the alarm deactivation method, refer to (1) in this section.
- Parameter error (A37) is not recorded in the alarm history.

When an alarm occurs, the malfunction (ALM) switches off and the dynamic brake is operated to stop the servo motor. At this time, the display indicates the alarm No.

Remove the cause of the alarm in accordance with (2) of this section. Use MR Configurator to refer to a factor of alarm occurrence. Use the alarm history of MR Configurator to refer to the alarm detailed information.

Display	Name	Definition	Cause	Action	(Note 2) Alarm detailed information
A10	Undervoltage	Power supply voltage dropped.	1. Power supply voltage is low. <Check method> Check that the power supply voltage is the following value or more. 200V class: 160VAC 100V class: 83VAC 400V class: 280VAC	Check the power supply.	2
			2. Shortage of power supply capacity caused the power supply voltage to drop at start, etc. <Check method> Check that the bus voltage is the following value or more. 200V class: 200VDC 100V class: 158VDC 400V class: 380VDC		
			3. The bus voltage dropped to the following value or less. 200V class: 200VDC 100V class: 158VDC 400V class: 380VDC		
			4. There was an instantaneous control circuit power failure of 60ms or longer.		1
			5. Faulty parts in the servo amplifier. <Check method> 1. The alarm occurs even if the is switched on after disconnection of all cables except the control circuit power supply cables. 2. Check that the bus voltage is the following value or more. 200V class: 200VDC 100V class: 158VDC 400V class: 380VDC	Change the servo amplifier.	
			6. The power supply voltage is distorted. When power impedance is high, the waveform of power supply voltage may be distorted due to the power regeneration current and recognized as undervoltage.	1. Set parameter No.PC27 to "0001". 2. Review the power supply.	
A12	Memory error 1 (RAM)	RAM memory fault	Faulty parts in the servo amplifier. <Check method> The alarm occurs even if the power is switched on after disconnection of all cables except the control circuit power supply cables.	Change the servo amplifier.	
A13	Clock error	Printed board fault			
A15	Memory error 2 (EEP-ROM)	EEP-ROM fault	1. Faulty parts in the servo amplifier. <Check method> The alarm occurs even if the power is switched on after disconnection of all cables except the control circuit power supply cable.	Change the servo amplifier.	
			2. The number of write times to EEP-ROM exceeded 100,000.		
			3. The multi-revolution data, which is saved as a home position, read from EEP-ROM is abnormal.	Execute a home position setting.	8

Display	Name	Definition	Cause	Action	(Note 2) Alarm detailed information
A16	Encoder error 1 (At power on)	Communication error occurred between encoder and servo amplifier.	1. Encoder connector (CN2) is disconnected.	Connect correctly.	44
			2. A wrong type of encoder cable (2-wire/4-wire) was selected in parameter setting.	Correct the setting in the fourth digit of parameter No.PC22.	
			3. Encoder cable faulty (Wire breakage or shorted)	Repair or change the cable.	
			4. Encoder fault.	Change the servo motor.	
			5. Servo motor other than that of MR-J3 series was connected.	Check the combination of servo amplifier and servo motor.	63
			6. External noise caused a communication error. <Check method> 1. Check that the encoder cable and the power cable run in parallel. 2. Check if the environment is affected by the noise of surrounding electromagnetic valve, magnetic contactor, relay, etc. 3. Check the servo amplifier and servo motor for grounding. 4. Check if there is a factor causing surrounding static electricity. 5. Check shield procedure of the encoder cable.	Take the grounding and noise reduction techniques.	
A17	Board error	CPU/parts fault	Faulty parts in the servo amplifier <Check method> The alarm occurs even if the power is switched on after disconnection of all cables except the control circuit power supply cable.	Change the servo amplifier.	
A19	Memory error 3 (Flash ROM)	ROM memory fault			
A1A	Motor combination error	Wrong combination of servo amplifier and servo motor.	Wrong combination of servo amplifier and servo motor connected.	Check the combination of the servo amplifier and the servo motor.	

Display	Name	Definition	Cause	Action	(Note 2) Alarm detailed information
A20	Encoder error 2 (during runtime)	Communication error occurred between encoder and servo amplifier.	1. The encoder cable was disconnected. <Check method> Check the encoder cable connection.	Connect the servo amplifier connector (CN2) and the servo motor encoder connector correctly.	47
			2. Encoder cable is faulty. <Check method> Check if the encoder cable is disconnected or shorted.	Repair or replace the cable.	
			3. An excessive acceleration occurred due to oscillation, etc. is detected by the encoder. <Check method> Check if servo motor vibration or unusual noise, etc. is occurring.	1. Reduce the position loop gain. 2. Decrease the auto tuning response setting.	8
			4. Encoder fault.	Change the servo motor.	
			5. External noise caused a communication error. <Check method> 1. Check that the encoder cable and the power cable run in parallel. 2. Check if the environment is affected by the noise of surrounding electromagnetic valve, magnetic contactor, relay, etc. 3. Check the servo amplifier and servo motor for grounding. 4. Check if there is a factor causing surrounding static electricity. 5. Check shield procedure of the encoder cable.	Take the grounding and noise reduction techniques.	
A21	Encoder error 3 (during runtime))	An error occurred in encoder.	1. An excessive acceleration occurred due to oscillation, etc. is detected by the encoder. <Check method> Check if servo motor vibration or unusual noise, etc. is occurring.	1. Reduce the position loop gain. 2. Decrease the auto tuning response setting.	
			2. A fault in the detection circuit of the encoder.	Change the servo motor.	

Display	Name	Definition	Cause	Action	(Note 2) Alarm detailed information
A24	Main circuit error	Ground fault occurred at the servo motor power output (U, V, and W).	1. Power input lines and servo motor power lines are in contact. (Power input lines and servo motor power lines are in contact with the main circuit terminal block (TE1).)	Connect correctly.	
			2. A ground fault or short occurred at the servo motor power cable. (A ground fault or short due to the deterioration of insulator.)	Repair the cable.	
			3. Servo amplifier fault. <Check method> The alarm occurs even if servo motor power lines are disconnected from the power output (U, V, and W).	Change the servo amplifier.	
			4. Servo motor fault. <Check method> The alarm does not occur when the power is switched on after disconnection of servo motor power lines in servo motor side terminal.	Change the servo motor.	
			5. Malfunction of external dynamic brake. <Check method> The alarm does not occur when the power is switched on after disconnection of servo motor power lines in external dynamic brake-side terminal.	1. Check the parameter and dynamic brake sequence. 2. Change the external dynamic brake.	
			6. External noise caused the overcurrent detection circuit to misoperate. <Check method> 1. Check if the environment is affected by the noise of surrounding electromagnetic valve, magnetic contactor, relay, etc. 2. Check the servo amplifier and servo motor for grounding.	Take the grounding and noise reduction techniques.	
A25	Absolute position erase	Absolute position data is erased.	1. Voltage drop in encoder (Battery disconnected.)	Connect the battery and make home position setting again.	
			2. Battery voltage low	Change the battery. Always make home position setting again.	
			3. Battery connector is loosely connected or battery is faulty.		
			4. Encoder cable is faulty.	Repair or replace the encoder cable.	
			5. Encoder fault.	Change the servo motor.	
		Power was switched on for the first time in the absolute position detection system.	Home position not set.	Connect the battery and make home position setting again.	

Display	Name	Definition	Cause	Action	(Note 2) Alarm detailed information
A30	Regenerative error	Permissible regenerative power of the built-in regenerative resistor or regenerative option is exceeded.	1.Wrong setting of parameter No. PA02	Set correctly.	1
			2. High-duty operation or continuous regenerative operation caused the permissible regenerative power of the regenerative option to be exceeded. <Check method> Check the regenerative load ratio on the status display.	1. Reduce the frequency of positioning. 2. Use the regenerative option of larger capacity. 3. Reduce the load.	
			3. Power supply voltage is abnormal. 200V class: 260VAC or more 100V class: More than 135VAC 400V class: 535VAC or more	Check the power supply	
			4. Built-in regenerative resistor or regenerative option is not connected.	Connect correctly	4
			5. Built-in regenerative resistor or regenerative option faulty.	Change the servo amplifier or regenerative option.	
		Regenerative transistor fault	6. Servo amplifier fault. (Regenerative transistor is faulty.) <Check method> 1. The regenerative option has overheated abnormally. 2. The alarm occurs even after removal of the built-in regenerative resistor or regenerative option.	Change the servo amplifier.	
			7. Servo amplifier fault. (Regenerative circuit fault)	Change the servo amplifier.	2
A31	Overspeed	Speed has exceeded the instantaneous permissible speed.	1. Small acceleration/deceleration time constant caused overshoot to be large.	Increase acceleration/deceleration time constant.	
			2. Servo system is instable to cause overshoot.	1. Re-set servo gain to proper value. 2. If servo gain cannot be set to proper value. 1) Reduce load inertia moment ratio; or 2) Reexamine acceleration/ deceleration time constant.	
			3. Electronic gear ratio is large (parameters No.PA06, PA07)	Set correctly.	
			4. Encoder faulty.	Change the servo motor.	

Display	Name	Definition	Cause	Action	(Note 2) Alarm detailed information
A32	Overcurrent	Current that flew is higher than the permissible current of the servo amplifier.	1. A ground fault or short occurred at the servo motor power cable. (A ground fault or short due to the deterioration of insulator.) <Check method> The alarm occurs even if power is switched on after disconnection of servo motor power wires in servo motor-side terminal.	Repair the cable.	
			2. External dynamic brake fault. <Check method> The alarm does not occur when the power is switched on after disconnection of servo motor power lines in external dynamic brake-side terminal.	1. Check the parameter and dynamic brake sequence. 2. Change the external dynamic brake.	
			3. Servo amplifier fault. <Check method> The alarm occurs even if the power is switched on after disconnection of the servo motor power lines from the servo motor power output (U, V, and W).	Change the servo amplifier.	
			4. Servo motor fault. <Check method> The alarm does not occur when the power is switched on after disconnection of servo motor power lines in servo motor side terminal.	Change the servo motor.	
			5. External noise caused the overcurrent detection circuit to misoperate. <Check method> 1. Check if the environment is affected by the noise of surrounding electromagnetic valve, magnetic contactor, relay, etc. 2. Check the servo amplifier and servo motor for grounding.	Take the grounding and noise reduction techniques.	
			6. Encoder fault.	Change the servo motor.	2

Display	Name	Definition	Cause	Action	(Note 2) Alarm detailed information
A33	Overvoltage	The bus voltage is the following value or more. 200V class and 100V class: 400VDC 400V class: 800VDC	1. Regenerative option is not used.	Use a regenerative option.	
			2. Though the regenerative option is used, the parameter No.PA02 setting is "□□ 00 (not used)".	Set correctly.	
			3. Lead of built-in regenerative resistor or regenerative option is open or disconnected.	1. Change the lead. 2. Connect correctly.	
			4. Wire breakage of built-in regenerative resistor or regenerative option.	1. For built-in regenerative resistor, change the servo amplifier. 2. For regenerative option, change the regenerative option.	
			5. Capacity of built-in regenerative resistor or regenerative option is insufficient.	Add regenerative option or increase capacity.	
			6. The jumper across BUE-SD of the FR-BU2 brake unit is removed.	Fit the jumper across BUE-SD.	
			7. Impedance in the power supply lines is high, and leak current from the servo motor power lines is large.	Use a regenerative option. (Products without built-in regenerative resistor)	
			8. Ground fault occurred in the servo motor power output (U, V, and W).	Correct the wiring.	
			9. High power supply voltage	Check the power.	
			10. Servo amplifier fault. (The regenerative transistor fault)	Change the servo amplifier.	
A37	Parameter error	Parameter setting is wrong.	1. Servo amplifier fault caused the parameter setting to be rewritten.	Change the servo amplifier.	
			2. Regenerative option not used with servo amplifier was selected in parameter No.PA02.	Set parameter No.PA02 correctly.	2
			3. Value outside setting range has been set in electronic gear.	Set parameters No.PA06, PA07 correctly.	1
			4. The number of write times to EEP-ROM exceeded 100,000 due to parameter write, etc.	Change the servo amplifier.	1, 2
			5. Indexer positioning operation was executed with MR-J3-D01 mounted to the servo amplifier.	When the MR-J3-D01 is mounted on the servo amplifier, indexer positioning operation cannot be executed. Remove the MR-J3-D01.	2
		Point table setting is wrong.	Setting value is out of the setting range.	Set it correctly.	1

Display	Name	Definition	Cause	Action	(Note 2) Alarm detailed information
A45	Main circuit device overheat	Main circuit device overheat.	1. Ambient temperature of servo amplifier is over 55℃ (131°F).	Check environment so that ambient temperature is 0 to 55℃ (32 to 131°F).	
			2. Used beyond the specifications of close mounting.	Use within the range of specifications. (Refer to section 2.1.)	
			3. The power supply was turned on and off continuously by overloaded status.	Check operation pattern.	
			4. A cooling fan or heat sink is clogged up.	Clean the cooling fan or heat sink.	
			5. Servo amplifier fault. (It occurred after the power supply is turned on.)	Change the servo amplifier.	
A46	Servo motor overheat	Servo motor temperature rise actuated the thermal sensor.	1. Ambient temperature of servo motor is over 40℃ (104°F).	Check environment so that ambient temperature is 0 to 40℃ (32 to 104°F).	1, 2, 10, 20
			2. Servo motor is overloaded.	1. Reduce load. 2. Check operation pattern. 3. Use servo motor that provides larger output.	
			3. Thermal sensor in encoder is faulty.	Change the servo motor.	1
A47	Cooling fan alarm	The cooling fan of the servo amplifier stopped, or its speed decreased to or below the alarm level.	1. Cooling fan life expiration (Refer to section 2.5.)	Change the cooling fan of the servo amplifier.	
			2. Foreign matter caught in the cooling fan stopped rotation.	Remove the foreign matter.	
			3. The servo amplifier failed.	Change the servo amplifier.	

Display	Name	Definition	Cause	Action	(Note 2) Alarm detailed information
A50	Overload 1	Load exceeded overload protection characteristic of servo amplifier.	1. Servo amplifier is used in excess of its continuous output current.	1. Reduce load. 2. Check operation pattern. 3. Check if the electromagnetic brake is released. 4. Check the friction of the machine. 5. Use a servo amplifier and a servo motor that provide larger output.	1
			2. After Overload 2 (A51) occurred and the alarm was cleared by the power supply turned OFF and ON, the overload operations have been repeated.	1. Reduce the load. 2. Check operation pattern. 3. Use a servo amplifier that provides larger output.	1
			3. The servo system is unstable and causing hunting or resonance.	1. Repeat acceleration/deceleration to execute auto tuning. 2. Change the auto tuning response setting. 3. Set auto tuning to OFF and make gain adjustment manually. 4. Check the coupling with servo motor shaft for looseness.	1, 2
			4. Encoder fault. <Check method> When the servo motor shaft is rotated with the servo-off, the cumulative feedback pulses do not vary in proportion to the rotation angle of the shaft but the indication skips or returns midway.	Change the servo motor.	

Display	Name	Definition	Cause	Action	(Note 2) Alarm detailed information
A51	Overload 2	Maximum output current flowed continuously for several seconds due to machine collision or the like.	1. Servo amplifier fault. <Check method> The alarm does not occur when the operation is checked on the servo motor alone, disconnected from the machine. (Check the operation by restoring to the initial gain.)	Change the servo amplifier.	
			2. The servo system is unstable and causing hunting or resonance.	1. Repeat acceleration / deceleration to execute auto tuning. 2. Change the auto tuning response setting. 3. Set auto tuning to OFF and make gain adjustment manually. 4. Check the coupling with servo motor shaft for looseness.	
			3. Machine collision	1. Check operation pattern. 2. Install limit switches. 3. Check if the electromagnetic brake is released.	
			4. Wrong connection of servo motor. Servo amplifier's output terminals U, V, and W do not match servo motor's input terminals U, V, and W.	Connect correctly.	
			5. Encoder fault. <Check method> When the servo motor shaft is rotated with the servo-off, the cumulative feedback pulses do not vary in proportion to the rotation angle of the shaft. Or error such as deviation in position within one-revolution at a stop.	Change the servo motor.	
			6. Wire breakage of power supply cable.	Repair the cable.	
			7. Servo motor fault.	Change the servo motor.	

Display	Name	Definition	Cause	Action	(Note 2) Alarm detailed information
A52	Error excessive	The difference between the model position and the actual servo motor position exceeds three rotations. (Refer to the function block diagram in section 1.1.2.)	1. Acceleration/deceleration time constant is too small.	Increase the acceleration/deceleration time constant.	4
			2. Forward rotation torque limit (parameter No.PA11) or reverse rotation torque limit (parameter No.PA12) are too small.	Increase the torque limit value.	
			3. Motor cannot be started due to torque shortage caused by power supply voltage drop.	1. Check the power supply capacity. 2. Use servo motor which provides larger output.	
			4. Position loop gain (parameter No.PB08) value is small.	Increase set value and adjust to ensure proper operation.	
			5. Servo motor shaft was rotated by external force.	1. When torque is limited, increase the limit value. 2. Reduce load. 3. Use servo motor that provides larger output.	
			6. Machine collision	1. Check operation pattern. 2. Install limit switches.	
			7. Encoder fault	Change the servo motor.	
			8. Wrong connection of servo motor. Servo amplifier's output terminals U, V, W do not match servo motor's input terminals U, V, W.	Connect correctly.	
			9. Wire breakage of power supply cable.	Repair the cable.	
			10. Commands were inputted when the torque limit value is set to "0".	Set torque limit to proper value.	8
A61	Operation alarm	Setting mistake of auxiliary function.	"1" or "3" is set for the auxiliary function of point table No.255.	Set "0" or "2" for the value of auxiliary function.	1
A8A	Serial communication time-out error	USB communication or RS-422 communication stopped for longer than the specified time.	1. Communication cable breakage.	Repair or change the communication cable.	
			2. Communication cycle longer than regulated time.	Shorten the communication cycle.	
			3. Wrong protocol.	Correct protocol.	

Display	Name	Definition	Cause	Action	(Note 2) Alarm detailed information
A8D	CC-Link communication error	Normal communication with the master station cannot be made.	1. The station number switch (STATION NO.) is set to 0 or above 64.	Set the station number to within the range of 1 to 64, and turn the power on.	
			2. The baud rate switch (MODE) is set to other than 0 to 4.	Set the baud rate switch (MODE) to within the range of 0 to 4.	
			3. The transmission status is abnormal.	Reexamine the wiring.	
			4. Incorrect wiring of CC-Link twisted cable	1. Repair or change the CC-Link twisted cable. 2. Connect the cable or connector correctly.	
			5. CC-Link twisted cable faulty.		
			6. The CC-Link connector has come off.		
			7. The termination resistor is not connected.	Connect the termination resistor correctly.	
			8. Noise entered the CC-Link twisted cable.		
			9. The programmable controller CC-Link unit was reset.		
			10. The manufacturer setting switch (SW2) was changed.	Set the manufacturer setting switch (SW2) to the default setting (left).	
A8E	Serial communication error	Serial communication error occurred between servo amplifier and communication device (e.g.personal computer).	1. Communication cable fault. (Open cable or short circuit).	Repair or change the cable.	1, 2
			2. Communication device (e.g. personal computer) faulty.	Check the communication setting of the communication device (e.g. personal computer).	
			3. The character codes are incorrect.	Check the character codes.	4
			4. Command is incorrect.	Check the command.	8
			5. Data No. is incorrect.	Check the data No.	10
(Note 1) 888	Watchdog	CPU, parts faulty.	1. Faulty parts in the servo amplifier. <Check method> The alarm occurs even if power is switched on after disconnection of all cables except the control circuit power supply cables.	Change the servo amplifier.	
			2. External noise caused the CPU in the servo amplifier to misoperate.	1. Check if the environment is affected by the noise of surrounding electromagnetic valve, magnetic contactor, relay, etc. 2. Check the grounding of the servo amplifier.	

Note 1. At power-on, "888" appears instantaneously, but it is not an error.

2. To check the alarm detailed information, MR Configurator is required. The alarm detailed information can be checked with "Alarm History" window displayed when you select the alarm/alarm history on MR Configurator.

(3) Remedies for warnings

⚠CAUTION

- If an absolute position counter warning (AE3) occurred, always make home position setting again. Not doing so may cause unexpected operation.

POINT

- When any of the following warnings has occurred, do not resume operation by switching power of the servo amplifier OFF/ON repeatedly. The servo amplifier and servo motor may become faulty. If the power of the servo amplifier is switched OFF/ON during the warnings, allow more than 30 minutes for cooling before resuming operation.
  - Excessive regenerative warning (AE0)
  - Overload warning 1 (AE1)
- Always execute a home position return when the forward rotation stroke end (LSP) or the reverse rotation stroke end (LSN) turns off.
- Warnings are not recorded in the alarm history.

When AE6 and AE9 occur, the servo turns off. When any other warning occurs, the operation continues. However, an alarm may occur, causing improper operation.
Remove the cause of warning according to (3) of this section. Use the MR Configurator to refer to a factor of warning occurrence.

Display	Name	Definition		Cause	Action
A90	Home position return incomplete	In incremental system	Positioning operation was performed without home position return.	1. Positioning operation was performed without home position return.	Perform home position return.
			Home position return ended abnormally.	2. Home position return speed could not be decreased to creep speed.	Check home position return speed/creep speed/moving distance after proximity dog.
				3. Limit switch was actuated during home position return starting at other than position beyond dog.	
			Home position return is incomplete.	4. Indexer JOG operation (in automatic/ manual operation) was executed without home position return.	Perform home position return. This warning is automatically cleared after home position return is executed.
				5. The operation method (parameter No.PA01), electronic gear (parameter No.PA06 and PA07), station No. direction selection (parameter No.PA14), or number of stations/rotation (parameter No.PC46) was changed.	
		In absolute position detection system	Positioning operation was performed without home position setting.	1. Positioning operation was performed without home position setting.	Perform home position setting.
			Home position setting ended abnormally.	2. Home position return speed could not be decreased to creep speed. 3. Limit switch was actuated during home position setting starting at other than position beyond dog.	Check home position return speed/creep speed/moving distance after proximity dog.
			Operation was performed without making home position setting while an absolute position erase (A25) is being occurred.	4. Voltage drop in encoder (Battery is disconnected.)	Connect the battery and make home position setting again.
				5. Battery voltage low	Change the battery. Always make home position setting again.
				6. Battery cable or battery is faulty.	
			Home position setting is incomplete.	7. Indexer JOG operation (in automatic/ manual operation) was executed without home position setting.	Perform home position setting. This warning is automatically cleared after home position return is executed.
				8. The operation method (parameter No.PA01), electronic gear (parameter No.PA06 and PA07), station No. direction selection (parameter No.PA14), or number of stations/rotation (parameter No.PC46) was changed.	

Display	Name	Definition	Cause	Action
A92	Open battery cable warning	Absolute position detection system battery voltage is low.	1. Battery cable is open.	Repair cable or changed.
			2. Battery voltage supplied from the servo amplifier to the encoder fell to about 3V or less. (Detected with the encoder)	Change the battery.
			3. An encoder cable was disconnected.	Repair or replace the encoder cable.
A96	Home position setting error	Home position setting could not be made.	1. Out of in-position range at home positioning.	Make home position setting within the in-position range.
			2. Position command was inputted during the home position setting.	Input position command after home positioning.
			3. Creep speed high.	Reduce creep speed.
A97	Next station warning	Automatic operation was executed with invalid next station setting.	1. Automatic operation has been started when the station No. exceeding the setting value of parameter No.PC46 (number of stations/rotation) is specified.	Specify the station number up to the maximum number of stations set in parameter No.PC46 (indexer positioning operation number of stations/rotation).
			2. Automatic operation has been started when the next station selection 1 to 8 (RYnA to RYnE, and RY(n＋2)3 to RY(n＋2)5) are all set to on.	
A99	Stroke limit warning	The limit switch of command rotation direction (LSP or LSN) was turned off.	The forward rotation stroke end (LSP) was turned off during forward rotation.	Reexamine the travel range not to turn off LSP/LSN.
			The reverse rotation stroke end (LSN) was turned off during reverse rotation.	
A9D	CC-Link warning 1	The station number switch or baud rate switch position was changed from the setting at power-on.	1. The station number switch position was changed from the setting at power-on.	Restore to the setting at the time of power on.
			2. The baud rate switch position was changed from the setting at power-on.	
			3. The occupied station count switch position was changed from the setting at power-on.	
A9E	CC-Link warning 2	Communication error of cable.	1. The transmission status is abnormal.	Take measures against noise.
			2. Incorrect wiring of CC-Link twisted cable	1. Change the CC-Link twisted cable. 2. Connect the cable or connector correctly.
			3. CC-Link twisted cable faulty.	
			4. The CC-Link connector has come off.	
			5. The termination resistor is not connected.	Connect the termination resistor correctly.
			6. Noise entered the CC-Link twisted cable.	
A9F	Battery warning	Voltage of battery for absolute position detection system reduced.	Battery voltage fell to 3.2V or less. (Detected with the servo amplifier)	Change the battery.
AE0	Excessive regenerative warning	Regenerative power may exceed the permissible regenerative power of the built-in regenerative resistor or the regenerative option.	Regenerative power increased to 85% of the permissible regenerative power of the built-in regenerative resistor or regenerative option. <Check method> Call the status display and check regenerative load ratio.	1. Reduce frequency of positioning. 2. Change the regenerative option to the one with larger capacity. 3. Reduce load. 4. Change the servo amplifier/servo motor to the one with larger capacity.
AE1	Overload warning 1	Overload alarm 1 or 2 may occur.	Load increased to 85% or more of the overload alarm 1 or 2 occurrence level.	Refer to overload 1 (A50) and overload 2 (A51).

Display	Name	Definition	Cause	Action
AE3	Absolute position counter warning	Absolute position encoder pulses faulty.	1. Noise entered the encoder.	Take measures against noise.
			2. Encoder faulty.	Change the servo motor.
		The multi-revolution counter value of the absolute position encoder exceeded the maximum revolution range.	3. The movement amount from the home position exceeded a 32767 rotation or 37268 rotation in succession.	Make home position setting again.
		The update cycle for writing the multi-revolution counter value of the absolute position encoder to EEP-ROM is short.	Refer to POINT in section 16.7.	Refer to POINT in section 16.7.
AE6	Servo forced stop warning	EMG is off.	External forced stop was enabled. (EMG was turned off.)	Ensure safety and deactivate forced stop.
AE8	Cooling fan speed reduction warning	The speed of the servo amplifier cooling fan decreased to or below the warning level. (This warning is not displayed with MR-J3-70T/100T among servo amplifiers equipped with a cooling fan.)	1. Cooling fan life expiration (Refer to section 2.5.)	Change the cooling fan of the servo amplifier.
			2. The power supply of the cooling fan is broken.	Change the servo amplifier.
			3. The cooling fan is clogged with foreign matter and the speed was decreased.	Remove the foreign matter.
AE9	Main circuit off warning	Servo-on (SON) was switched on with main circuit power off.		Switch on main circuit power.
AEC	Overload warning 2	Operation, in which a current exceeding the rating flew intensively in any of the U, V and W phases of the servo motor, was repeated.	During a stop, the status in which a current flew intensively in any of the U, V and W phases of the servo motor occurred repeatedly, exceeding the warning level.	1. Reduce the positioning frequency. 2. Reduce the load. 3. Change the servo amplifier/ servo motor with the one of larger capacity.
AED	Output watt excess warning	The status, in which the output wattage (speed × torque) of the servo motor exceeded the rated output, continued steadily.	Continuous operation was performed with the output wattage (speed × torque) of the servo motor exceeding 150% of the rated output.	1. Reduce the servo motor speed. 2. Reduce the load. 3. Change the servo amplifier/servo motor with the one of larger capacity.

16.12.5 Point table error

When a point table error occurs, the parameter error (A37) occurs. After the parameter No. of parameter error (A37), the point table error details are displayed.

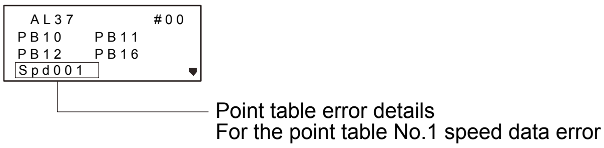

```
 AL37        #00
PB10   PB11
PB12   PB16
Spd001
```

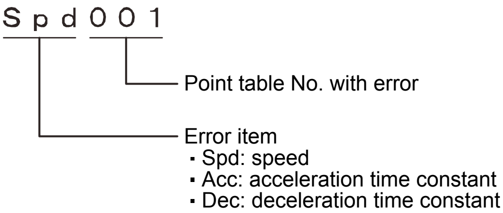

16.12.6 Trouble which does not trigger an alarm/warning

POINT

- When the servo amplifier, servo motor, or encoder malfunctions, the following status may occur.

The following example shows possible causes which do not trigger alarm or warning. Remove each cause by referring to this section.

Description	Check method	Possible cause	Action
The LED display disappears.	When the display is turned on by disconnecting all connectors except the power supply, check if the disconnected wires are shorted.	The external I/O terminal is shorted.	Check the wiring of I/O signals.
	Check if the control circuit power supply of the servo amplifier is off.	The control circuit power supply is not applied.	Turn on the control circuit power supply.
	Check if the voltage of the control circuit power supply dropped.	The voltage of the control circuit power supply has dropped.	Set the control circuit power supply voltage within the rated range.
The servo motor does not operate.	Check if warning (A99) is occurring.	Forward rotation stroke end (LSP) and reverse rotation stroke end (LSN) are not on.	Switch on the forward rotation stroke end (LSP) and reverse rotation stroke end (LSN).
	Check the connection of the servo motor.	The output terminals (U, V, W) of the servo amplifier do not match the input terminals (U, V, W) of the servo motor.	Connect each phase of the U, V, and W correctly.
	Check if warning (AE9) is occurring.	The servo-on was turned on while the main circuit power of servo amplifier is off.	Turn on the main circuit power supply.
	Check if a servo alarm or warning is occurring.	A servo alarm occurred.	Check the alarm content and remove its cause.
	Check the on/off state of servo-on and reset.	Servo-on is off.	Turn on servo-on.
		Reset is on.	Turn off reset.
	Check the setting of parameter No.PA01 (control mode).	The setting of parameter No.PA01 (control mode) is incorrect.	Check the setting of parameter No.PA01 (control mode).
	Check if the generated torque exceeds the torque limit value. 1. Check the "instantaneous torque" in the status display. 2. Check the torque ripple with the "Graph" command of "Monitor" menu on MR Configurator.	1. The maximum torque is insufficient. Servo capacity is insufficient or load is too large.	1. Reduce the load by changing the mass and shape of work. 2. Reduce the effective load ratio by increasing acceleration/deceleration time.
		2. An unintended torque limit is enabled. Or the setting of the torque limit is 0 (no torque is generated). (Set with Parameter PA11, PA12, PC35)	Review the torque limit setting.
	Check the point table setting.	The setting of point tables is incorrect.	Review the point table setting.
	Check if the load side is interfering.	The load side is interfering with the servo motor.	Remove the interference of the load side.
	For a servo motor with an electromagnetic brake, check the power supply of the electromagnetic brake.	The electromagnetic brake has not been released.	Turn on the power supply of the electromagnetic brake, and release the electromagnetic brake.

Description	Check method	Possible cause	Action
The servo motor does not operate.	Check the electronic gear setting.	The setting of the electronic gear is incorrect.	Set a proper value of the electronic gear.
	When using manual pulse generator, check the wiring and the assignment of command pulse multiplication setting (input signals MD0, TP0, TP1) and parameter No.PA05).	Wiring or the command pulse multiplication setting is incorrect.	Review the wiring or the command pulse multiplication setting.
		Between DICOM and OPC of the CN6 connector of the servo amplifier is not connected.	Connect between DICOM and OPC.
The speed of the servo motor is not increased. Or the speed is increased too much.	Check the settings of the speed command and electronic gear.	The setting of the speed command and electronic gear are incorrect.	Review the settings of the speed command and electronic gear.
	Check the servo motor power cable.	The output circuit is open phase.	Review the wiring of the servo motor power cable.
	Check if the voltage of the main circuit power supply dropped.	The voltage of the main circuit power supply has dropped.	1. Set the main circuit power supply within the permissible voltage fluctuation range of specifications. 2. Check the wiring of the main circuit power supply.
	For a servo motor with an electromagnetic brake, check the power supply of the electromagnetic brake.	The electromagnetic brake has not been released.	Turn on the power supply of the electromagnetic brake to release the brake.
The servo motor vibrates with low frequency.	If the servo motor can be driven safely, repeat acceleration and deceleration three or four times to complete auto tuning.	Failed to estimate the load to motor inertia ratio by auto tuning. If the auto tuning mode 2 or the manual mode is being used, the setting of load to motor inertia ratio (parameter No.PB06) is incorrect.	Adjust gains. (Refer to chapter 9.) If the auto tuning mode 2 or the manual mode is being used, review the setting of load to motor inertia ratio (parameter No.PB06).
	Check the command from the controller.	The command from the controller is unstable.	1. Review the command from the controller. 2. Check if the cable for a command has any failure, such as a disconnection.
	Check if the mechanical part is malfunctioning. (Example) 1. If the timing belt is loose. 2. If it has abrasion.	Load of the mechanical part has changed.	1. Readjust the gain. (Refer to chapter 9.) 2. Maintain the mechanical part.
	Check if the required torque of the machine exceeds the maximum torque of the servo motor.	Torque during acceleration/deceleration is overshooting exceeding the limit of the servo motor when the motor stops.	Reduce the load by increasing the acceleration and deceleration time or reducing the mass of the workpiece.
	Increase the auto tuning response (parameter No.PA09). (Other than manual mode)	1. The servo gain is low. 2. The auto tuning response is low.	Increase the auto tuning response, and readjust the gain. (Refer to chapter 9.)

Description	Check method	Possible cause	Action
An unusual noise is occurring at the servo motor.	1. If the servo motor can be driven safely, repeat acceleration and deceleration three or four times to complete auto tuning. 2. Reduce the auto tuning response (parameter No.PA09). (Except for the manual mode)	1. The servo gain is high. 2. The auto tuning response is high.	Decrease the auto tuning response, and readjust the gain. (Refer to chapter 9.)
	If the servo motor can be driven safely, remove the load, and check for a noise only on the servo motor.	If there is noise, the life of the bearing.	Change the servo motor.
		If there is no noise, increase the backlash of the mechanical part.	Perform adjustment on the load side.
	For a servo motor with an electromagnetic brake, check the dragging of the brake.	1. The sequence of releasing the electromagnetic brake is incorrect. 2. Failure of power supply for the electromagnetic brake.	1. Check the sequence of releasing the electromagnetic brake. 2. Check the power supply for the electromagnetic brake.
	The brake rattles when using a servo motor with an electromagnetic brake.	The noise is due to a gap between the connections of brake, not a fault.	
The servo motor vibrates.	1. If the servo motor can be driven safely, repeat acceleration and deceleration three or four times to complete auto tuning. 2. Reduce the auto tuning response (parameter No.PA09). (Except for the manual mode)	1. The servo gain is too high. 2. The auto tuning response is too high.	Decrease the auto tuning response, and readjust the gain. (Refer to chapter 9.)
	If the servo motor can be driven safely, execute the adaptive tuning.	The machine is vibrating (resonating).	Adjust the machine resonance suppression filter. (Refer to section 10.3.)
	If the servo motor can be driven safely, execute tuning with the advanced gain search on MR Configurator MRZJW3-SETUP221E (C2 or later).	The machine is vibrating (resonating).	Adjust gains. (Refer to chapter 9.)
	If the servo motor can be driven safely, perform tuning by advanced vibration suppression control.	The load side is vibrating.	Perform the filter adjustment. (Refer to section 10.4.)
	Display the cumulative feedback pulses in "high speed monitor" command of "monitor" menu on MR Configurator, and check if its numerical value is skipping.	Feedback pulses are being superposed due to superimposed noise in the encoder cable.	Take countermeasures against noise by laying the encoder cable apart from power cables, etc.
	Check if there is a backlash on the machine part.	There is a backlash between the servo motor and the machine (such as a gear and coupling).	Adjust the backlash on the coupling and the machine part.
	Check the mounting part of the servo motor.	The rigidity of the servo motor mounting part is low.	Increase the rigidity of the mounting part by methods, such as increasing the board thickness and reinforcing the part with ribs.

Description	Check method	Possible cause	Action
The servo motor vibrates.	Check the servo motor power cable.	The output circuit is open phase.	Review the wiring of the servo motor power cable.
	Check if the vibration varies depending on the speed.	An unbalanced torque of the machine side is large.	Adjust the balance of the machine side.
	Check the mounting accuracy of the servo motor and machine.	The eccentricity due to a core gap is large.	Review the direct accuracy.
	Check the load for the servo motor axis.	The load for the servo motor axis is large.	Adjust the load for the shaft within the specifications of the servo motor. For the shaft permissible load, refer to "Servo Motor Instruction Manual (Vol. 2)".
	Check the vibration from outside.	An external vibration propagated to the servo motor.	Prevent the vibration from the external vibration source.
The rotation accuracy is low. (The rotation speed is unstable.)	1. If the servo motor can be driven safely, repeat acceleration and deceleration three times or more to complete auto tuning. 2. Increase the auto tuning response (parameter No.PA09). (Except for manual mode)	1. The servo gain is low. 2. The auto tuning response is low.	Increase the auto tuning response, and readjust the gain. (Refer to chapter 9.)
	Check if the limiting torque (TLC) is in ON. 1. Check with the external I/O signal display in the diagnostic mode. 2. Check with "Input/output I/F Display" command of "Monitor" menu on MR Configurator.	An unintended torque limit is enabled. (When the torque limit is enabled, the torque limit (TLC) is ON.)	Cancel the torque limit.
	Check if the maximum torque exceeds the torque limit value. 1. Check the "instantaneous torque" in the status display. 2. Check the torque ripple with “Graph” command of "Monitor" menu on MR Configurator .	The maximum torque is insufficient. 1. Shortage of servo capacity. 2. Too large load.	1. Reduce the load by changing the mass and shape of the workpiece. 2. Reduce the effective load ratio by increasing acceleration/deceleration time.
		The setting of the torque limit is incorrect. (Set with parameter PA11, PA12, PC35.)	Check the torque limit setting.
Unsteady vibration at a stop.	1. If the servo motor can be driven safely, repeat acceleration and deceleration three or four times to complete auto tuning. 2. Increase the auto tuning response (parameter No.PA09). (Other than manual mode)	1. The servo gain is low. 2. The auto tuning response is low.	Increase the auto tuning response, and readjust the gain. (Refer to chapter 9.)

Description	Check method	Possible cause	Action
The servo motor starts rotating upon the power-on of the servo amplifier, or the servo motor starts rotating upon servo-on.	Check if the servo-on is turned ON.	Servo-on has been on at power-on.	Check the controller programs.
	For a servo motor with an electromagnetic brake, check the timing of releasing the electromagnetic brake.	1. The sequence of releasing the electromagnetic brake is incorrect. 2. Failure of power supply for the electromagnetic brake.	1. Check the sequence of releasing the electromagnetic brake. 2. Check the power supply for the electromagnetic brake.
	Check the servo motor power cable.	The output circuit is open phase.	Check the wiring of the servo motor power cable.
The position deviates at the home position return.	A fixed amount (in one revolution) deviates. (Dog type home position return)	Detection of a zero pulse is near dog off position (Dog type home position return)	Adjust the installation of the proximity dog.
	Check the in-position range (parameter No.PA10).	The in-position range is too large.	Set a narrower in-position range.
	Check if the proximity dog signal is inputted correctly.	1. The proximity dog switch is faulty. 2. The installation of the proximity dog is faulty.	1. Repair or replace the proximity dog switch. 2. Adjust the mounting of the proximity dog switch.
	Check the installation of the proximity dog switch.	The position of the proximity dog switch is deviated , or installation of the proximity dog is faulty.	Adjust the installation of the proximity dog switch.
	Check the controller programs.	The controller programs are incorrect.	Check the controller programs.
The position deviates during operation after the home position return.	Check the servo alarm and warning.	1. A servo alarm occurred. 2. The servo motor coasted by the servo alarm.	Check the the alarm content, and remove its cause.
	The command position and current position do not match.	Forward rotation stroke end (LSP) or reverse rotation stroke end (LSN) was turned off. (A99 occurred.)	Check the wiring of forward rotation stroke end (LSP) and reverse rotation stroke end (LSN).
	"Cumulative feedback pulses × feed length multiplication" does not match the actual machine position.	1. A mechanical slip occurred. 2. The backlash of the machine part is large.	Adjust the machine part.
	Cumulative feedback pulses does not match "Cumulative command pulses × electronic gear setting" value.	Temporary disconnection of the power supply line	Review the wiring.
		1. The servo gain is low. 2. The auto tuning response is low. 3. Settling time is slow.	Increase the auto tuning response, and readjust the gain. (Refer to chapter 9.)
		1. Forward rotation stroke end (LSP) or reverse rotation stroke end (LSN) was turned off. (A99 occurred.) 2. Clear (CR) and reset (RES) were turned on.	1. Review the wiring and sequence of each signal. 2. Review the controller programs. 3. If a malfunction may occur due to much noise, increase the setting value of input filter setting (parameter No.PD19).

Description	Check method	Possible cause	Action
The position deviates during operation after the home position return.	1. If the servo motor can be driven safely, repeat acceleration and deceleration three or four times to complete auto tuning. 2. Increase the auto tuning response (parameter No.PA09). (Except for manual mode)	The auto tuning response is low.	Increase the auto tuning response, and readjust the gain. (Refer to chapter 9.)
	For geared servo motor, check the setting of the electronic gear (parameter No.PA06 and PA07).	The reduction ratio is not calculated correctly.	Review the setting of the reduction ratio.
	Check the point table setting, selection, start timing, etc.	The setting of point tables and start timing is incorrect.	1. Review the point table setting. 2. Review the controller programs.
	The input value from the manual pulse generator MR-HDP01 and the command position (mm) do not match.	Wiring or multiplication setting (parameter No.PA05, manual pulse generator multiplication 1 (TP1) and manual pulse generator multiplication 2 (TP2)) of the manual pulse generator is incorrect.	1. Check the wiring. 2. Check if the multiplication is set correctly.
		1. Command input pulses are miscounted by noises. 2. Shielding the command cable is faulty. 3. The command cable has a contact failure or disconnected.	Check the shield procedure of the command cable.
	The command from the controller and the command position of the servo amplifier do not match.	Communication command error (An unintended command is inputted.)	Review the controller programs and protocol. (Refer to chapter 3.)
	Check the in-position range (parameter No.PA10).	The in-position range is too large.	Set a narrower in-position range.

Description	Check method	Possible cause	Action
In absolute position detection system, a restored position deviates at power restoration.	For the geared servo motor, check the setting of the electronic gear (parameter No.PA06 and PA07).	The reduction ratio is not calculated correctly.	Check the setting of the reduction ratio.
	The command position and the current position do not match.	The maximum speed at power failure (3000r/min) exceeded when the servo amplifier power supply is OFF.	Check the machine components so that the servo motor does not rotate at the speed of 3000r/min or more while the power supply is OFF.
Overshoot/under shoot occurs.	1. Check the velocity waveform with "Graph" command of "Monitor" menu on MR Configurator, and check if overshoot/undershoot is occurring. 2. If the servo motor can be driven safely, repeat acceleration and deceleration three times or more to complete auto tuning.	1. The servo gain is low or too high. 2. The auto tuning response is low or too high.	Adjust the auto tuning response, and readjust the gain. (Refer to chapter 9.)
	Check if the maximum torque exceeds the torque limit value. 1. Check the "instantaneous torque" in the status display. 2. Check the torque ripple with "Graph" command of "Monitor" menu on MR Configurator.	The maximum torque is insufficient. 1. Shortage of servo capacity. 2. Too large load.	1. Reduce the load by changing the mass and shape of the workpiece. 2. Reduce the effective load ratio by increasing acceleration/deceleration time.
		The setting of the torque limit is incorrect. (Set with parameter PA11, PA12, PC35.)	Review the torque limit setting.
	Check if there is a backlash on the machine part.	There is a backlash between the servo motor and the machine (such as a gear and coupling).	Adjust the backlash on the coupling and the machine part.
Communication with the servo amplifier fails using MR Configurator.	Check if they are on-line.	They are off-line.	Set them to on-line. Select "on-line" in the system setting of the "Set-up" menu.
	Check if the communication cable has any failure such as damage.	Communication cable fault.	Change the communication cable.
	Check the communication settings, such as the baud rate and ports. Check with "system setting" command of "Set up" menu.	The communication setting is incorrect.	Set the communication correctly.
	Check if the model selection is set correctly. Check with "system setting" command of "Set up" menu.	The model being connected differs from the model set in the model selection.	Set the model setting correctly.
	In the device manager on the personal computer, check if "MITSUBISHI MELSERVO USB Controller" is being displayed under the USB (Universal Serial Bus) controller.	The driver is not set correctly.	Delete an unknown device or other devices, cycle the power of the servo amplifier, and then set the driver again according to Found New Hardware Wizard. For details, refer to Help of MR Configurator.

Description	Check method	Possible cause	Action
An abnormal value is displayed in the monitor values of MR Configurator.	Check if the model selection is set correctly. Check with "system setting" command of "Set up" menu.	The model being connected differs from the model set in the model selection.	Set the model correctly.
For a servo motor with an electromagnetic brake, the brake went out.	Remove the servo motor and all the wiring from the machine, and check if the servo motor shaft can be rotated by the hands. (If it is rotated by the hands, the electromagnetic brake has a failure.)	Expiration of life or a failure of electromagnetic brake. For the life of electromagnetic brake, refer to "Servo Motor Instruction Manual (Vol. 2)".	Change the servo motor.
The coasting distance of the servo motor became longer.	Check if the load was increased.	If the load was increased, the permissible load to motor inertia ratio of the dynamic brake was exceeded. (Refer to section 13.3.)	1. Reduce the load. 2. Change the servo amplifier.
	For servo motor with an electromagnetic brake 1. Check if the external relay connected to the electromagnetic brake interlock (MBR) operates normally. 2. Check if the electromagnetic brake is malfunctioning.	1. An external relay is malfunctioning. 2. The wiring of electromagnetic brake interlock (MBR) is incorrect. 3. Expiration of life or a failure of electromagnetic brake.	1. Change the external relay. 2. Check the wiring. 3. Change the servo motor.

17. SPEED CONTROL OPERATION

POINT

- To execute the speed control operation, a parameter needs to be changed. Set parameter No.PA01 to "2□□□".
- The speed control operation is supported by servo amplifiers with software version A4 or later.

This chapter explains the speed control operation method using MR-J3-□T servo amplifier. Any matters not described in this chapter are the same as those of the point table positioning operation. For more information, refer to chapters up to 15.

17.1 Function

17.1.1 Overview

Set the servo motor speed by specifying the servo motor speed of the point table No.1 to 8 in the device of speed selection 1 (RYnA) to speed selection 3 (RYnC). Speed command data can be directly specified by using the remote register when 2 stations are occupied.
Set the acceleration time constant and deceleration time constant by specifying the acceleration time constant and deceleration time constant of the point table No.1 to 2 in the device of speed acceleration and deceleration selection (RYnD).

17.1.2 Servo amplifier standard specifications (functions only)

Item			Description
Command method	Point table No. input		Available with CC-Link communication CC-Link communication (1 station occupied): 8 points CC-Link communication (2 stations occupied): 8 points
	Speed command input	Remote register	Available via CC-Link communication (with 2 stations occupied) Setting speed command data (servo motor speed) through remote register
		Speed No. input	Select servo motor speed and acceleration/deceleration time constant in the point table

17.1.3 Function list

The following table lists the functions of this servo. For details of the functions, refer to the reference field.

Function	Description	Reference
High-resolution encoder	High-resolution encoder of 262144 pulses/rev is used as a servo motor encoder.	
Gain switching function	You can switch gains during rotation/stop, and can use input devices to switch gains during operation.	Section 10.6
Adaptive filter II	The servo amplifier detects mechanical resonance and sets filter characteristics automatically to suppress mechanical vibration.	Section 10.2
Low-pass filter	Suppresses high-frequency resonance which occurs as the servo system response is increased.	Section 10.5
Machine analyzer function	Analyzes the frequency characteristic of the mechanical system by simply connecting an MR Configurator installed personal computer and the servo amplifier. MR Configurator is necessary for this function.	
Robust disturbance compensation	This function provides better disturbance response when the response level cannot be increased due to large load to motor inertia ratio, such as for roll feed axes. MR Configurator is necessary for this function.	
Auto tuning	Automatically adjusts the gain to optimum value if load applied to the servo motor shaft varies.	Section 9.2
S-pattern acceleration / deceleration time constant	Speed can be increased and decreased smoothly.	Parameter No.PC13
Regenerative option	Used when the built-in regenerative resistor of the servo amplifier does not have sufficient regenerative capability for the regenerative power generated.	Section 14.2
Brake unit	Used when the regenerative option cannot provide enough regenerative power. Can be used for the 5kW or more servo amplifier.	Section 14.3
Power regeneration converter	Used when the regenerative option cannot provide enough regenerative power. Can be used for the 5kW or more servo amplifier.	Section 14.4
Alarm history clear	Clears the alarm history.	Parameter No.PC18
Torque limit	Limits the servo motor torque.	Section 4.6.3 Section 6.11.1
Output signal (DO) forced output	Turns on/off the output signals forcibly independently of the servo status. Use this function for checking output signal wiring, etc.	Section 7.7.4 Section 8.5.7 (4)
Test operation	JOG operation, positioning operation, motor-less operation, DO forced output. Parameter unit or MR Configurator is required for the test operation mode.	Section 7.7 Section 8.5.7
Limit switch	A travel range of the servo motor can be limited using the forward rotation stroke end (LSP)/reverse rotation stroke end (LSN).	

17.2 I/O signals (I/O devices) transferred to/from the programmable controller CPU

17.2.1 I/O signals (I/O devices)

(1) When 1 station is occupied

RYn/RXn: 32 points each, RWrn/RWwn: 4 points each

Programmable controller→Servo amplifier (RYn)			
(Note) Device No.	Signal (Device)	Symbol	CN6 connector pin No.
RYn0	Servo-on	SON	
RYn1	Forward rotation start	ST1	
RYn2	Reverse rotation start	ST2	
RYn3	Not available		
RYn4	Forward rotation stroke end	LSP	3
RYn5	Reverse rotation stroke end	LSN	4
RYn6	Not available		
RYn7	Not available		
RYn8	Monitor output execution demand	MOR	
RYn9	Instruction code execution demand	COR	
RYnA	Speed selection 1	SP0	
RYnB	Speed selection 2	SP1	
RYnC	Speed selection 3	SP2	
RYnD	Speed acceleration / deceleration selection	STAB	
RYnE to RY(n+1)9	Not available		
RY(n+1)A	Reset	RES	
RY(n+1)B to RY(n+1)F	Not available		

Servo amplifier→Programmable controller (RXn)			
(Note) Device No.	Signal (Device)	Symbol	CN6 connector pin No.
RXn0	Ready	RD	14
RXn1 to RXn3	Not available		
RXn4	Limiting torque	TLC	
RXn5	Speed reached	SA	
RXn6	Electromagnetic brake interlock	MBR	
RXn7	Not available		
RXn8	Monitoring	MOF	
RXn9	Instruction code execution completion	COF	
RXnA	Warning	WNG	
RXnB	Not available		
RXnC	Not available		
RXnD	Dynamic brake interlock	DB	
RXnE	Not available		
RXnF	Zero speed detection	ZSP	
RX(n+1)0 to RX(n+1)9	Not available		
RX(n+1)A	Malfunction	ALM	15
RX(n+1)B	Remote station communication ready	CRD	
RX(n+1)C to RX(n+1)F	Not available		

Programmable controller→Servo amplifier (RW_{wn})	
Address No.	Signal
RW_{wn}	Monitor 1
RW_{wn+1}	Monitor 2
RW_{wn+2}	Instruction code
RW_{wn+3}	Writing data

Servo amplifier→Programmable controller (RW_{rn})	
Address No.	Signal
RW_{rn}	Monitor 1 data
RW_{rn+1}	Monitor 2 data
RW_{rn+2}	Respond code
RW_{rn+3}	Reading data

Note. "n" depends on the station No. setting.

(2) When 2 stations are occupied

RXn/RYn: 64 points each, RWrn/RWwn: 8 points each

Programmable controller→Servo amplifier (RYn)			
(Note) Device No.	Signal (Device)	Symbol	CN6 connector pin No.
RYn0	Servo-on	SON	
RYn1	Forward rotation start	ST1	
RYn2	Reverse rotation start	ST2	
RYn3	Not available		
RYn4	Forward rotation stroke end	LSP	3
RYn5	Reverse rotation stroke end	LSN	4
RYn6	Not available		
RYn7	Not available		
RYn8	Monitor output execution demand	MOR	
RYn9	Instruction code execution demand	COR	
RYnA	Speed selection 1	SP0	
RYnB	Speed selection 2	SP1	
RYnC	Speed selection 3	SP2	
RYnD	Speed acceleration / deceleration selection	STAB	
RYnE to RY(n+1)F	Not available		
RY(n+2)0	Not available		
RY(n+2)1	Speed command execution demand		
RY(n+2)2 to RY(n+2)5	Not available		
RY(n+2)6	Internal torque limit selection	TL1	
RY(n+2)7	Proportional control	PC	
RY(n+2)8	Gain switching	CDP	
RY(n+2)9	Not available		
RY(n+2)A	Speed specifying method selection		
RY(n+2)B to RY(n+3)9	Not available		
RY(n+3)A	Reset	RES	
RY(n+3)B to RY(n+3)F	Not available		

Servo amplifier→Programmable controller (RXn)			
(Note) Device No.	Signal (Device)	Symbol	CN6 connector pin No.
RXn0	Ready	RD	14
RXn1 to RXn3	Not available		
RXn4	Limiting torque	TLC	
RXn5	Speed reached	SA	
RXn6	Electromagnetic brake interlock	MBR	
RXn7	Not available		
RXn8	Monitoring	MOF	
RXn9	Instruction code execution completion	COF	
RXnA	Warning	WNG	
RXnB	Not available		
RXnC	Not available		
RXnD	Dynamic brake interlock	DB	
RXnE	Not available		
RXnF	Zero speed detection	ZSP	
RX(n+1)0 to RX(n+1)F	Not available		
RX(n+2)0	Not available		
RX(n+2)1	Speed command execution completion		
RX(n+2)2 to RX(n+3)9	Not available		
RX(n+3)A	Malfunction	ALM	15
RX(n+3)B	Remote station communication ready	CRD	
RX(n+3)C to RX(n+3)F	Not available		

Note. "n" depends on the station No. setting.

Programmable controller→Servo amplifier (RW$_{wn}$)		Servo amplifier→Programmable controller (RW$_{rn}$)	
(Note 1) Address No.	Signal	(Note 1) Address No.	Signal
RW$_{wn}$	Monitor 1 (Note 2)	RW$_{rn}$	Monitor 1 data lower 16 bits
RW$_{wn}$+1	Monitor 2 (Note 2)	RW$_{rn}$+1	Monitor 1 data upper 16bits
RW$_{wn}$+2	Instruction code	RW$_{rn}$+2	Respond code
RW$_{wn}$+3	Writing data	RW$_{rn}$+3	Reading data
RW$_{wn}$+4	Not available	RW$_{rn}$+4	Not available
RW$_{wn}$+5	Not available	RW$_{rn}$+5	Monitor 2 data lower 16 bits
RW$_{wn}$+6	Speed command data/Speed selection No.(Note 3)	RW$_{rn}$+6	Monitor 2 data upper 16 bits
RW$_{wn}$+7	Not available	RW$_{rn}$+7	Not available

Note 1. "n" depends on the station No. setting.

2. Specify the code of the lower 16 bits as the monitor code of 32-bit data.

3. If parameter No.PC30 is set to "□0□□", specify the speed selection No. to RW$_{wn}$+6. If parameter No.PC30 is set to "□1□□", specify the speed data to RW$_{wn}$+6 and turn on the Speed command execution demand (RY(n+2)1).

17.2.2 Detailed explanation of I/O signals

(1) Input signals (input devices)

The note signs in the remarks column indicate the following descriptions.

*1: Can be used as an external input signal of CN6 connector by setting parameter No.PD12.

*2: Can be automatically turned on by setting parameter No.PD01.

*3: Can be automatically turned on by setting parameter No.PD03.

The device whose Device No. field has an oblique line cannot be used with CC-Link.

<table>
<tr><th rowspan="2">Signal name
(Device name)</th><th rowspan="2">Description</th><th colspan="2">Device No.</th><th rowspan="2">Remarks</th></tr>
<tr><th>1 station occupied</th><th>2 stations occupied</th></tr>
<tr><td>Servo-on</td><td>Turning RYn0 turns on the base circuit, making operation ready to start. (Servo on status)
Turning RYn0 off shuts off the base circuit, coasting the servo motor. (Servo off status)</td><td>RYn0</td><td>RYn0</td><td>*2</td></tr>
<tr><td>Forward rotation start</td><td rowspan="2">This is used to start the servo motor.
The following shows the rotation directions.
<table>
<tr><th colspan="2">(Note) RY of CC-Link</th><th rowspan="2">Servo motor starting direction</th></tr>
<tr><th>RYn2</th><th>RYn1</th></tr>
<tr><td>0</td><td>0</td><td>Stop (stop when speed command=0)</td></tr>
<tr><td>0</td><td>1</td><td>CCW direction</td></tr>
<tr><td>1</td><td>0</td><td>CW direction</td></tr>
<tr><td>1</td><td>1</td><td>Stop (stop when speed command=0)</td></tr>
</table>
Note. 0:OFF
1:ON
When RYn1 and RYn2 are turned on or off during operation, the servo motor decelerates to a stop. In this case, the servo will not be locked. The servo motor speed will be controlled to 0r/min, and the stop position will not be maintained.</td><td>RYn1</td><td>RYn1</td><td></td></tr>
<tr><td>Reverse rotation start</td><td>RYn2</td><td>RYn2</td><td></td></tr>
<tr><td>Forward rotation stroke end</td><td rowspan="2">In factory setting, an external input signal (CN6-3) is enabled for the forward rotation stroke end, and an external input signal (CN6-4) for the reverse rotation stroke end.
In operation, short circuit between CN6-3 and DOCOM, and CN6-4 and DOCOM. When they are opened, the servo motor stops immediately, and the servo will be locked.
When using with CC-Link, enable the signals with parameter No.PD12. When operating, turn RYn4 and RYn5 on. When they are turned off, the servo motor stops immediately, and the servo will be locked. A stop method is selectable using parameter No.PD20.
When the forward rotation stroke end and reverse rotation stroke end are not used, set them to "automatic on" by parameter No.PD01.
<table>
<tr><th colspan="2">(Note) RY of CC-Link</th><th colspan="2">Operation</th></tr>
<tr><th>RYn4</th><th>RYn5</th><th>CCW direction</th><th>CW direction</th></tr>
<tr><td>1</td><td>1</td><td>○</td><td>○</td></tr>
<tr><td>0</td><td>1</td><td></td><td>○</td></tr>
<tr><td>1</td><td>0</td><td>○</td><td></td></tr>
<tr><td>0</td><td>0</td><td></td><td></td></tr>
</table>
Note. 0:OFF
1:ON</td><td>RYn4</td><td>RYn4</td><td>*2</td></tr>
<tr><td>Reverse rotation stroke end</td><td>RYn5</td><td>RYn5</td><td>*1
*2</td></tr>
</table>

<table>
<tr><th rowspan="2">Signal name
(Device name)</th><th rowspan="2">Description</th><th colspan="2">Device No.</th><th rowspan="2">Remarks</th></tr>
<tr><th>1 station occupied</th><th>2 stations occupied</th></tr>
<tr><td>Monitor output execution demand</td><td>When RYn8 is turned on, the following data and signals are set. At the same time, RXn8 turns on. While RYn8 is on, the monitor values are kept updated.
1) When 1 station is occupied
Remote register RW_m: Data requested by Monitor 1 (RW_{wn})
Remote register RW_m+1: Data requested by Monitor 2 (RW_{wn}+1)
Remote register RW_m+2: Respond code indicating normal or error
2) When 2 stations are occupied
Remote register RW_m: Lower 16 bits of data demanded by Monitor 1(RW_{wn})
Remote register RW_m+1: Upper 16 bits of data demanded by Monitor 1(RW_{wn})
Remote register RW_m+5: Lower 16 bits of data demanded by Monitor 2(RW_{wn}+2)
Remote register RW_m+6: Upper 16 bits of data demanded by Monitor 2(RW_{wn}+2)
Remote register RW_m+2: Respond code indicating normal or error</td><td>RYn8</td><td>RYn8</td><td></td></tr>
<tr><td>Instruction code execution demand</td><td>When RYn9 is turned on, process corresponding to the instruction code set to the remote register RW_{wn}+2 will be executed.
After completion of instruction code execution, the respond code indicating normal or error is set to RW_m+2. At the same time, RXn9 turns on.
Refer to section 17.2.4 for details of instruction code.</td><td>RYn9</td><td>RYn9</td><td></td></tr>
<tr><td>Speed selection 1</td><td rowspan="3">Select the servo motor speed in the point table No.1 to 8 using RYnA to RYnC.
You can also switch the servo motor speed during operation.
<table>
<tr><th rowspan="2">Point table No.</th><th colspan="3">(Note) RY of CC-Link</th></tr>
<tr><th>RYnC</th><th>RYnB</th><th>RYnA</th></tr>
<tr><td>1</td><td>0</td><td>0</td><td>0</td></tr>
<tr><td>2</td><td>0</td><td>0</td><td>1</td></tr>
<tr><td>3</td><td>0</td><td>1</td><td>0</td></tr>
<tr><td>4</td><td>0</td><td>1</td><td>1</td></tr>
<tr><td>5</td><td>1</td><td>0</td><td>0</td></tr>
<tr><td>6</td><td>1</td><td>0</td><td>1</td></tr>
<tr><td>7</td><td>1</td><td>1</td><td>0</td></tr>
<tr><td>8</td><td>1</td><td>1</td><td>1</td></tr>
</table>
Note. 0:OFF
1:ON</td><td>RYnA</td><td>RYnA</td><td rowspan="3">*3</td></tr>
<tr><td>Speed selection 2</td><td>RYnB</td><td>RYnB</td></tr>
<tr><td>Speed selection 3</td><td>RYnC</td><td>RYnC</td></tr>
<tr><td>Speed acceleration / deceleration selection</td><td>When RYnD is turned off, acceleration and deceleration time constant set in the point table No.1 will be selected.
When RYnD is turned on, acceleration and deceleration time constant set in the point table No.2 will be selected.</td><td>RYnD</td><td>RYnD</td><td>*3</td></tr>
<tr><td>Speed command execution demand</td><td>When RY(n+2)1 is turned on, the point table No. or speed command data set in remote register RW_{wn}+6 is set.
When it is set to the servo amplifier, the respond code indicating normal or error is set to RW_m+2. At the same time, Speed command execution completion (RX(n+2)1) turns on.
By setting parameter No.PC50, you can choose the timing when the speed command data of remote register is reflected.
Refer to section 17.7.2 for details.</td><td></td><td>RY(n+2)1</td><td></td></tr>
</table>

Signal name (Device name)	Description	Device No.		Remarks
		1 station occupied	2 stations occupied	
Internal torque limit selection	When RY(n+2)6 is turned off, parameter No.PA11 (forward rotation torque limit) and parameter No.PA12 (reverse rotation torque limit) will be valid and when it is turned on, the torque limit value of parameter No.PC35 (internal torque limit) will be valid. (Refer to section 4.6.3)		RY(n+2)6	
Proportional control	When RY(n+2)7 is turned on, the speed amplifier is switched from the proportional integral type to the proportional type. If the servo motor at a stop is rotated even one pulse due to any external factor, it generates torque to compensate for a position shift. When the servo motor shaft is to be locked mechanically after stop, switching on the proportion control (RY(n+2)7) upon stop will control the unnecessary torque generated to compensate for a position shift. When the shaft is to be locked for an extended period of time, turn internal torque limit selection (RY(n+2)6) on simultaneously with proportion control (RY(n+2)7) to keep the torque not exceed the rated torque using internal torque limit (parameter No.PC35).		RY(n+2)7	*2
Gain switching	When RY(n+2)8 is turned on, the load to motor inertia ratio and the corresponding gain values change to the values of parameter No.PB29 to PB32. To change the gain using RY(n+2)8, disable the auto tuning.		RY(n+2)8	
Speed specifying method selection	Select how to give a speed command. (Refer to section 3.6.3.) Off: Specifying speed command by RY of CC-Link Give a speed command by specifying the point table No. with selection 1 to 3 (RYnA to RYnC). On: Specifying speed command by remote register Give a speed command by setting the instruction code with remote register (RW$_{wn}$+6). Set parameter No.PC30 (remote register-based speed specifying method selection) to "□0□□" (specify speed selection No.) or "□1□□ (specify the servo motor speed).		RY(n+2)A	
Reset	Keeping RY(n+1)A or RY(n+3)A on for 50ms or longer allows an alarm to be deactivated. Some alarms cannot be deactivated by Reset RY(n+1)A or RY(n+3)A. (Refer to section 17.9.4.) If RY(n+1)A or RY(n+3)A is turned on with no alarm occurring, the base circuit will not be shut off. Parameter No.PD20 (function selection D-1) is set to "□□0□", the base circuit will be shut off. This device is not designed to make a stop. Do not turn it on during operation.	RY(n+1)A	RY(n+3)A	

(2) Output signals (Output device)

POINT

- The output devices can be used for external output signals of CC-Link RX and CN6 connector.

Device of which Device No. column has a diagonal line cannot be used in CC-Link.

Signal name (Device name)	Description	Device No.	
		1 station occupied	2 stations occupied
Ready	A ready is assigned to the CN6-14 pin as an external output signal. When the servo-on is on and the servo amplifier is ready to operate, RXn0 turns on.	RXn0	RXn0
Limiting torque	RXn4 turns on when the set torque value is reached at the time of torque generation.	RXn4	RXn4
Speed reached	When servo-on (RYn0) is off or when both forward rotation start (RYn1) and reverse rotation start (RYn2) are off, and the servo motor speed has not reached the set speed, RXn5 turns off. When the servo motor speed approaches the set speed, RXn5 turns on. When the preset speed is 20r/min or less, RXn5 is always on.	RXn5	RXn5
Electromagnetic brake interlock	RXn6 turns off at servo-off or alarm occurrence. It will be off regardless of the state of the base circuit in the event of an alarm.	RXn6	RXn6
Monitoring	Refer to monitor output execution demand (RYn8).	RXn8	RXn8
Instruction code execution completion	Refer to instruction code execution demand (RYn9).	RXn9	RXn9
Warning	When a warning occurs, RXnA turns on. When no warning occurs, turning on the power will turn off RXnA after about 1 s.	RXnA	RXnA
Dynamic brake interlock	RXnD turns on when the dynamic brake needs to operate. When using an external dynamic brake with the servo amplifier of 11kW or more, this device is required. (Refer to section 14.6.) For the servo amplifier of 7kW or less, it is not necessary to use this device.	RXnD	RXnD
Zero speed detection	RXnF turns on when the servo motor speed is at zero speed (50 r/min) or less. Zero speed can be changed with parameter No. PC17. Example: Zero speed is 50 r/min 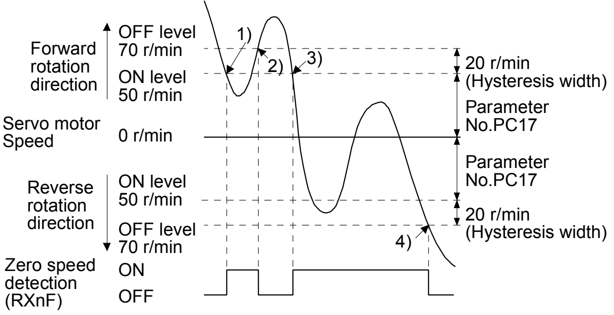 RXnF turns on when the servo motor is decelerated to 50 r/min (at 1)), and turns off when the servo motor is accelerated to 70 r/min again (at 2)). RXnF turns on when the servo motor is decelerated again to 50 r/min (at 3)), and turns off when the servo motor speed has reached -70 r/min (at 4)). The range from the point when the servo motor speed has reached the on-level, and RXnF turns on, to the point when it is accelerated again and has reached the off-level is called hysteresis width. Hysteresis width is 20 r/min for this servo amplifier.	RXnF	RXnF

Signal name (Device name)	Description	Device No.	
		1 station occupied	2 stations occupied
Speed command execution completion	Refer to speed command execution demand (RY(n+2)1).		RX(n+2)1
Malfunction	Malfunction is assigned to the CN6-15 pin as an external output signal. RX(n+1)A or RX(n+3)A turns on when the protective circuit is activated to shut off the base circuit. When no alarm has occurred, RX(n+1)A or RX(n+3)A turns off within about 1.5 s after power is switched on.	RX(n+1)A	RX(n+3)A
Remote station communication ready	This signal turns on at power-on and turns off at an alarm occurrence or in the reset (RY(n+1)A or RY(n+3)A) on status.	RX(n+1)B	RX(n+3)B

(3) Remote register

The signal whose Remote register field has an oblique line cannot be used.

(a) Input (Programmable controller→Servo amplifier)

Remote register		Signal name	Description	Setting range
1 station occupied	2 stations occupied			
RW_{wn}	RW_{wn}	Monitor 1	Requests the status indication data of the servo amplifier. 1) When 1 station is occupied Setting the monitor code to be monitored to RW_{wn} and turning on RYn8 stores data to RW_{m}. RXn8 turns on at the same time. 2) When 2 stations are occupied Setting the monitor code to be monitored to RW_{wn} and turning on RYn8 stores data to RW_{m}. RXn8 turns on at the same time. When requesting 32-bit data, specifying the lower 16 bits of the monitor code and turning on RYn8 stores the lower 16-bit data to RW_{m} and the upper 16-bit data to $RW_{m}+1$. RXn8 turns on at the same time. Refer to section 17.2.3 for the monitor codes of the status indication.	Refer to section 17.2.3.
$RW_{wn}+1$	$RW_{wn}+1$	Monitor 2	Requests the status indication data of the servo amplifier. 1) When 1 station is occupied Setting the monitor code to be monitored to $RW_{wn}+1$ and turning on RYn8 stores data to $RW_{m}+1$. RXn8 turns on at the same time. 2) When 2 stations are occupied Setting the monitor code to be monitored to $RW_{wn}+1$ and turning on RYn8 stores data to $RW_{m}+5$. RXn8 turns on at the same time. When requesting 32-bit data, specifying the lower 16 bits of the monitor code and turning on RYn8 stores the lower 16-bit data to $RW_{m}+5$ and the upper 16-bit data to $RW_{m}+6$. RXn8 turns on at the same time. Refer to section 17.2.3 for the monitor codes of the status indication.	Refer to section 17.2.3.
$RW_{wn}+2$	$RW_{wn}+2$	Instruction code	Sets the instruction code No. to be used to read and write parameters and point table data, and to refer to alarms, etc. Setting the instruction code No. to $RW_{wn}+2$ and turning RYn9 on execute the instruction. RXn9 turns on upon completion of the instruction execution. Refer to section 17.2.4 (1) for the details of the instruction code No.	Refer to section 17.2.4 (1).
$RW_{wn}+3$	$RW_{wn}+3$	Writing data	Sets the writing data to be used to write parameters and point table data, and to clear the alarm history, etc. Setting the writing data to $RW_{wn}+3$ and turning RYn9 on writes the data to the servo amplifier. RXn9 turns on upon completion of writing. Refer to section 17.2.4 (2) for the details of the writing data.	Refer to section 17.2.4 (2).
╲	$RW_{wn}+6$	Speed command data/Speed selection No.	1. When setting the servo motor speed directly Set the servo motor speed to RWwn+6 and turn the speed command execution demand (RY(n+2)1) on. 2. When using the speed data in the point table Set the point table No. to RWwn+6.	Point table No.:1 to 8 Servo motor speed: 0 to permissible speed

(b) Output (servo amplifier→programmable controller)

Note that the data set to RWrn and RWrn+1 depends on whether 1 station or 2 stations are occupied.

If you set inappropriate code No. or data to the remote register input, the error code is set to respond code (RWrn+2). For error codes, refer to section 17.2.5.

When 1 station is occupied

Remote register	Signal name	Description
RW$_{rn}$	Monitor 1 data	The data of the monitor code set to RW$_{wn}$ is set.
RW$_{rn}$+1	Monitor 2 data	The data of the monitor code set to RW$_{wn}$+1 is set.
RW$_{rn}$+2	Respond code	"0000" is set when the codes set to RW$_{wn}$ to RW$_{wn}$+3 are executed normally.
RW$_{rn}$+3	Reading data	Data corresponding to the read code set to RW$_{wn}$+2 is set.

When 2 stations are occupied

Remote register	Signal name	Description
RW$_{rn}$	Monitor 1 data lower 16 bits	The lower 16 bits of the data of the monitor code set to RW$_{wn}$ are set.
RW$_{rn}$+1	Monitor 1 data upper 16 bits	The upper 16 bits of the data of the monitor code set to RW$_{wn}$ are set. A sign is set if there are no data in the upper 16 bits.
RW$_{rn}$+2	Respond code	"0000" is set when the codes set to RW$_{wn}$ to RW$_{wn}$+6 are executed normally.
RW$_{rn}$+3	Reading data	Data corresponding to the read code set to RW$_{wn}$+2 is set.
RW$_{rn}$+4		
RW$_{rn}$+5	Monitor 2 data lower 16 bits	The lower 16 bits of the data of the monitor code set to RW$_{wn}$+1 are set.
RW$_{rn}$+6	Monitor 2 data upper 16 bits	The upper 16 bits of the data of the monitor code set to RW$_{wn}$+1 are set. A sign is set if there are no data in the upper 16 bits.
RW$_{rn}$+7		

17.2.3 Monitor codes

To request 32-bit data when 2 stations are occupied, specify the lower 16-bit code No. Use any of the instruction codes 0101 to 011C to read the decimal point position (multiplying factor) of the status indication.
When an instruction code No. that is not described in this section is set, an error code (□□1□) is stored to the respond coder (RWrn+2). At this time, "0000" is set to RWrn, RWrn+1, RWrn+5 and RWrn+6.

Refer to section 8.5.3 (2) for the content of monitor.

Code No.		Monitored item	Respond data (Servo amplifier→Programmable controller)	
1 station occupied	2 stations occupied		Data length	Unit
0000h	0000h			
0001h	0001h	Not used in speed control operation.		
0002h				
0003h	0003h			
0004h				
0005h	0005h			
0006h				
0007h	0007h			
0008h	0008h	Not used in speed control operation.		
0009h				
000Ah	000Ah	Cumulative feedback pulses lower 16 bits	16bit	[pulse]
000Bh		Cumulative feedback pulses upper 16 bits	16bit	[pulse]
000Ch				
000Dh				
000Eh	000Eh	Not used in speed control operation.		
000Fh				
0010h	0010h			
0011h	0011h	Regenerative load ratio	16bit	[%]
0012h	0012h	Effective load ratio	16bit	[%]
0013h	0013h	Peak load ratio	16bit	[%]
0014h	0014h	Instantaneous torque	16bit	[%]
0015h	0015h	ABS counter	16bit	[rev]
0016h	0016h	Motor speed lower 16 bits	16bit	×0.1[r/min]
0017h		Motor speed upper 16 bits	16bit	×0.1[r/min]
0018h	0018h	Bus voltage	16bit	[V]
0019h	0019h	Not used in speed control operation.		
001Ah				
001Bh	001Bh			
001Ch	001Ch	Within one-revolution position lower 16 bits	16bit	[pulse]
001Dh		Within one-revolution position upper 16 bits	16bit	[pulse]

17.2.4 Instruction codes (RWwn+2 ･ RWwn+3)

Refer to section 3.6.2 for the instruction code timing charts.

(1) Read instruction codes

The data requested to be read with the instruction code 0000h to 0AFFh is stored to the reading data (RWrn+3).

Set the instruction code No. corresponding to the item to RWrn+2. The codes and respond data are represented in 4-digit hexadecimal numbers.

When an instruction code No. that is not described in this section is set, an error code (□□1□) is stored to the respond coder (RWrn+2). At this time, "0000" is stored to the reading data (RWrn+3).

Code No.	Item/Function	Reading data (RWm+3) contents (Servo amplifier→Programmable controller)
0000h	Operation mode Reads the current operation mode.	0000:CC-Link operation mode 0001:Test operation mode
0010h	Current alarm (warning) reading Reads the alarm No. or warning No. occurring currently.	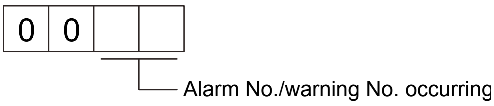
0020h	Alarm No. in alarm history (most recent alarm)	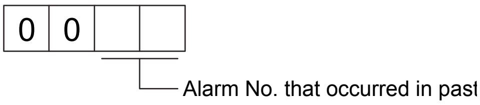
0021h	Alarm No. in alarm history (first recent alarm)	
0022h	Alarm No. in alarm history (second recent alarm)	
0023h	Alarm No. in alarm history (third recent alarm)	
0024h	Alarm No. in alarm history (fourth recent alarm)	
0025h	Alarm No. in alarm history (fifth recent alarm)	
0030h	Alarm occurrence time in alarm history (most recent alarm)	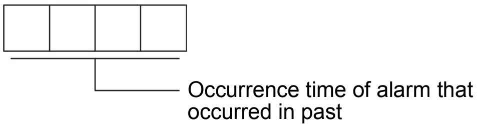
0031h	Alarm occurrence time in alarm history (first recent alarm)	
0032h	Alarm occurrence time in alarm history (second recent alarm)	
0033h	Alarm occurrence time in alarm history (third recent alarm)	
0034h	Alarm occurrence time in alarm history (fourth recent alarm)	
0035h	Alarm occurrence time in alarm history (fifth recent alarm)	

<table>
<tr><th>Code No.</th><th>Item/Function</th><th>Reading data (RWm+3) contents
(Servo amplifier→programmable controller)</th></tr>
<tr><td>0040h</td><td>Input device status 0
Reads the status (off/on) of the input devices.</td><td>Bit 0 to bit F indicate the off/on status of the corresponding input device.
bit F bit 0
<table>
<tr><th>bit</th><th>Device</th><th>bit</th><th>Device</th></tr>
<tr><td>0</td><td>Servo-on</td><td>8</td><td>Monitor output execution demand</td></tr>
<tr><td>1</td><td>Forward rotation start</td><td>9</td><td>Instruction code execution demand</td></tr>
<tr><td>2</td><td>Reverse rotation start</td><td>A</td><td>Speed selection 1</td></tr>
<tr><td>3</td><td></td><td>B</td><td>Speed selection 2</td></tr>
<tr><td>4</td><td>Forward rotation stroke end</td><td>C</td><td>Speed selection 3</td></tr>
<tr><td>5</td><td>Reverse rotation stroke end</td><td>D</td><td>Speed acceleration / deceleration selection</td></tr>
<tr><td>6</td><td></td><td>E</td><td></td></tr>
<tr><td>7</td><td></td><td>F</td><td></td></tr>
</table></td></tr>
<tr><td>0041h</td><td>Input device status 1
Reads the status (off/on) of the input devices.</td><td>Bit 0 to bit F indicate the off/on status of the corresponding input device.
bit F bit 0
<table>
<tr><th>bit</th><th>Device</th><th>bit</th><th>Device</th></tr>
<tr><td>0</td><td></td><td>8</td><td>Gain switching</td></tr>
<tr><td>1</td><td>Speed command execution demand</td><td>9</td><td></td></tr>
<tr><td>2</td><td></td><td>A</td><td>Speed specifying method selection</td></tr>
<tr><td>3</td><td></td><td>B</td><td></td></tr>
<tr><td>4</td><td></td><td>C</td><td></td></tr>
<tr><td>5</td><td></td><td>D</td><td></td></tr>
<tr><td>6</td><td>Internal torque limit selection</td><td>E</td><td></td></tr>
<tr><td>7</td><td>Proportional control</td><td>F</td><td></td></tr>
</table></td></tr>
<tr><td>0042h</td><td>Input device status 2
Reads the status (off/on) of the input devices.</td><td>Bit 0 to bit F indicate the off/on status of the corresponding input device.
bit F bit 0
<table>
<tr><th>bit</th><th>Device</th><th>bit</th><th>Device</th></tr>
<tr><td>0</td><td></td><td>8</td><td></td></tr>
<tr><td>1</td><td></td><td>9</td><td></td></tr>
<tr><td>2</td><td></td><td>A</td><td>Reset</td></tr>
<tr><td>3</td><td></td><td>B</td><td></td></tr>
<tr><td>4</td><td></td><td>C</td><td></td></tr>
<tr><td>5</td><td></td><td>D</td><td></td></tr>
<tr><td>6</td><td></td><td>E</td><td></td></tr>
<tr><td>7</td><td></td><td>F</td><td></td></tr>
</table></td></tr>
</table>

<table>
<tr><th>Code No.</th><th>Item/Function</th><th>Reading data (RW$_{m}$+3) contents
(Servo amplifier→programmable controller)</th></tr>
<tr><td>0050h</td><td>Output device status 0
Reads the status (off/on) of the output devices.</td><td>Bit 0 to bit F indicate the off/on status of the corresponding output device.
bit F bit 0
<table>
<tr><th>bit</th><th>Device</th><th>bit</th><th>Device</th></tr>
<tr><td>0</td><td>Ready</td><td>8</td><td>Monitoring</td></tr>
<tr><td>1</td><td></td><td>9</td><td>Instruction code execution completion</td></tr>
<tr><td>2</td><td></td><td>A</td><td>Warning</td></tr>
<tr><td>3</td><td></td><td>B</td><td></td></tr>
<tr><td>4</td><td>Limiting torque</td><td>C</td><td></td></tr>
<tr><td>5</td><td>Speed reached</td><td>D</td><td>Dynamic brake interlock</td></tr>
<tr><td>6</td><td>Electromagnetic brake interlock</td><td>E</td><td></td></tr>
<tr><td>7</td><td></td><td>F</td><td>Zero speed detection</td></tr>
</table></td></tr>
<tr><td>0051h</td><td>Output device status 1
Reads the status (off/on) of the output devices.</td><td>Bit 0 to bit F indicate the off/on status of the corresponding output device.
bit F bit 0
<table>
<tr><th>bit</th><th>Device</th><th>bit</th><th>Device</th></tr>
<tr><td>0</td><td></td><td>8</td><td></td></tr>
<tr><td>1</td><td>Speed command execution completion</td><td>9</td><td></td></tr>
<tr><td>2</td><td></td><td>A</td><td></td></tr>
<tr><td>3</td><td></td><td>B</td><td></td></tr>
<tr><td>4</td><td></td><td>C</td><td></td></tr>
<tr><td>5</td><td></td><td>D</td><td></td></tr>
<tr><td>6</td><td></td><td>E</td><td></td></tr>
<tr><td>7</td><td></td><td>F</td><td></td></tr>
</table></td></tr>
<tr><td>0052h</td><td>Output device status 2
Reads the status (off/on) of the output devices.</td><td>Bit 0 to bit F indicate the off/on status of the corresponding output device.
bit F bit 0
<table>
<tr><th>bit</th><th>Device</th><th>bit</th><th>Device</th></tr>
<tr><td>0</td><td></td><td>8</td><td></td></tr>
<tr><td>1</td><td></td><td>9</td><td></td></tr>
<tr><td>2</td><td></td><td>A</td><td>Malfunction</td></tr>
<tr><td>3</td><td></td><td>B</td><td>Remote station communication ready</td></tr>
<tr><td>4</td><td></td><td>C</td><td></td></tr>
<tr><td>5</td><td></td><td>D</td><td></td></tr>
<tr><td>6</td><td></td><td>E</td><td></td></tr>
<tr><td>7</td><td></td><td>F</td><td></td></tr>
</table></td></tr>
</table>

Code No.	Item/Function	Reading data (RW_m+3) contents (Servo amplifier→programmable controller)
0081h	Energization time Reads the energization time from shipment.	Returns the energization time [h]. 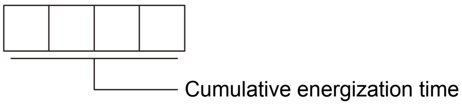
0082h	Power on frequency Reads the number of power-on times from shipment.	Returns the number of power-on times. 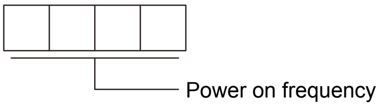
00A0h	Load to motor inertia ratio Reads the estimated load to motor inertia ratio to servo motor shaft inertia moment.	Return unit [times] 
00C0h	Error parameter No./Point data No. reading Reads the parameter No./point table No. in error.	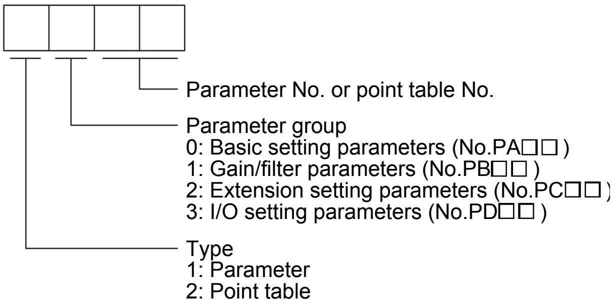

Code No.	Item/Function	Reading data (RW_m+3) contents (Servo amplifier→programmable controller)
0100h to 011Dh	Monitor multiplying factor Reads the multiplying factor of the data to be read with the monitor code. The instruction codes 0100 to 011D correspond to the monitor codes 0000 to 001D. 0000h is applied to the instruction code that does not correspond to the monitor code.	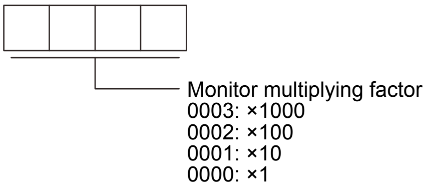 Monitor multiplying factor 0003: ×1000 0002: ×100 0001: ×10 0000: ×1
0200h	Parameter group reading Reads the parameter group that is written with code No.8200h.	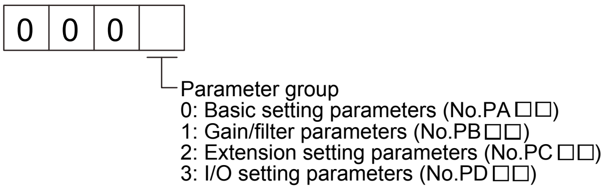 0 0 0 Parameter group 0: Basic setting parameters (No.PA□□) 1: Gain/filter parameters (No.PB□□) 2: Extension setting parameters (No.PC □□) 3: I/O setting parameters (No.PD□□)
0201h to 02FFh	Parameter data reading Reads the set value of each No. of the parameter group read with code No.0200h. The values of the last 2 digits of the code No. are converted to decimal, and the decimal value corresponds to the parameter No. If the instruction code is set outside the range set in parameter No.PA19, an error code is returned and the data cannot be read.	The value set in the parameter No. corresponding to the requested parameter group is stored.
0301h to 03FFh	Data format of parameter Reads the data format of each No. of the parameter group read with code No.0200h. The values of the last 2 digits of the code No. are converted to decimal, and the decimal value corresponds to the parameter No. If the instruction code is set outside the range set in parameter No.PA19, an error code is returned and the data cannot be read.	The value set in the parameter No. corresponding to the requested parameter group is stored. 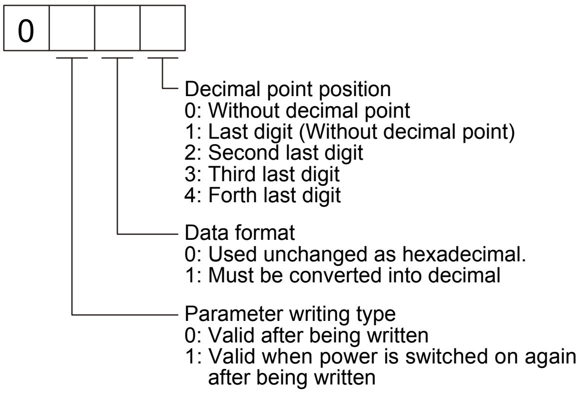 0 Decimal point position 0: Without decimal point 1: Last digit (Without decimal point) 2: Second last digit 3: Third last digit 4: Forth last digit Data format 0: Used unchanged as hexadecimal. 1: Must be converted into decimal Parameter writing type 0: Valid after being written 1: Valid when power is switched on again after being written
0601h to 0608h	The decimal value converted from the lower two digits of the servo motor speed code No. in the point table No. 1 to 8 corresponds to the point table No.	The servo motor speed set in the requested point table No. is returned. 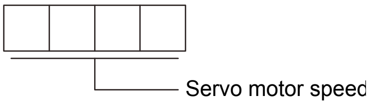 Servo motor speed

Code No.	Item/Function	Reading data (RW$_{\text{m}}$+3) contents (Servo amplifier→programmable controller)
0701h to 0702h	Acceleration time constant of point table No.1 and 2. The decimal value converted from the lower two digits of the code No. corresponds to the point table No.	The acceleration time constant set in the requested point table No. is returned.
0801h to 0802h	Deceleration time constant of point table No.1 and 2. The decimal value converted from the lower two digits of the code No. corresponds to the point table No.	The deceleration time constant set in the requested point table No. is returned.

(2) Write instruction codes

The data requested to be written with the instruction code 8010h to 91FFh is written to the servo amplifier. Set the instruction code No. corresponding to the item to the instruction code (RWwn+2) and the data to be written to the writing data (RWwn+3). The codes and return data are represented in 4-digit hexadecimal numbers.

When an instruction code No. that is not described in this section is set, an error code (□□1□) is stored to the respond coder (RWrn+2).

Code No.	Item	Writing data (RW$_{\text{wn}}$+3) contents (Programmable controller→servo amplifier)
8010h	Alarm reset command Deactivates the alarm that occurred.	1EA5
8101h	Feedback pulse value display data clear command Resets the display data of the status indication "Cumulative feedback pulse" to 0.	1EA5
8200h	Writing parameter group command Writes the group of parameters that are written to with codes No.8201h to 82FFh and 8301h to 83FFh. Writes the group of parameters that are read with codes No.0201h to 02FFh and 0301h to 03FFh.	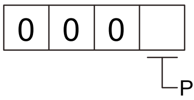 Parameter group 0: Basic setting parameters (No.PA□□) 1: Gain/filter parameters (No.PB□□) 2: Extension setting parameters (No.PC□□) 3: I/O setting parameters (No.PD□□)
8201h to 82FFh	Data RAM command of parameter Writes the set value of each No. of the parameter group written by code No.8200h to RAM. The value is cleared when power is switched off. The decimal value converted from the lower two digits of the code No. corresponds to the parameter No. An error code is returned if an instruction code outside the range set in parameter No.PA19 or a value outside the setting range of the corresponding parameter is written.	Convert the decimal values into hexadecimal before setting.
8301h to 83FFh	Data EEP-ROM command of parameter Writes the set value of each No. of the parameter group written by code No.8200h to EEP-ROM. Since the value is written to EEP-ROM, the value is held if power is switched off. The decimal value converted from the lower two digits of the code No. corresponds to the parameter No. An error code is returned if an instruction code outside the range set in parameter No.PA19 or a value outside the setting range of the corresponding parameter is written.	Convert the decimal values into hexadecimal before setting.

Code No.	Item	Writing data (RW_{wn}+3) contents (Programmable controller→Servo amplifier)
8601h to 8608h	Servo motor speed data RAM command of point table Writes the servo motor speed of point table No. 1 to 8 to RAM. These values are cleared when power is switched off. The decimal value converted from the lower two digits of the code No. corresponds to the point table No.	Convert the values into hexadecimal before setting.
8701h to 8702h	Acceleration time constant data RAM command of point table Writes the acceleration time constants of point table No.1 and 2 to RAM. These values are cleared when power is switched off. The decimal value converted from the lower two digits of the code No. corresponds to the point table No.	Convert the values into hexadecimal before setting.
8801h to 8802h	Deceleration time constant data RAM command of point table Writes the deceleration time constants of point table No.1 and 2 to RAM. These values are cleared when power is switched off. The decimal value converted from the lower two digits of the code No. corresponds to the point table No.	Convert the values into hexadecimal before setting.
8D01h to 8D08h	Servo motor speed data EEP-ROM command of point table Writes the servo motor speed of point table No.1 to 8 to EEP-ROM. The values are written to EEP-ROM and therefore stored even if the power is switched off. The decimal value converted from the lower two digits of the code No. corresponds to the point table No.	Convert the values into hexadecimal before setting.
8E01h to 8E02h	Acceleration time constant data EEP-ROM command of point table Writes the acceleration time constant No. of point table No.1 and 2 to EEP-ROM. The values are written to EEP-ROM and therefore stored even if the power is switched off. The decimal value converted from the lower two digits of the code No. corresponds to the point table No.	Convert the values into hexadecimal before setting.
8F01h to 8F02h	Deceleration time constant data EEP-ROM command of point table Writes the deceleration time constants of point table No.1 and 2 to EEP-ROM. The values are written to EEP-ROM and therefore stored even if the power is switched off. The decimal value converted from the lower two digits of the code No. corresponds to the point table No.	Convert the values into hexadecimal before setting.

17.2.5 Respond codes (RWrn+2)

If any of the monitor codes, instruction codes, speed selection No./speed command data set to the remote register is outside the setting range, the corresponding error code is set to respond code (RWwn+2). "0000" is set if they are normal.

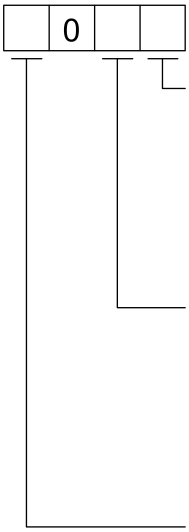

Error related to monitor code 1/monitor code 2

Code No.	Error detail	Details
0	Normal return	Successfully executed.
1	Code error	An incorrect code No. is specified.
2		
3		

Error related to instruction code/writing code

Code No.	Error detail	Details
0	Normal return	Successfully executed.
1	Code error	An incorrect code No. is specified.
2	Parameter selection error	An unavailable parameter No. is specified.
3	Out of writing data range	A value out of the setting range is set.

Error related to speed selection No. and speed command data

Code No.	Error detail	Details
0	Normal return	Successfully executed.
1		
2		
3	Out of writing data range	A value out of the setting range is set.

17.3 Signal

17.3.1 Signal (device) explanations

POINT

- In the case of speed control operation, the devices assigned to the CN6 connector cannot be changed.

(1) I/O device

(a) Input device

POINT

- Devices that are assigned to the CN6 connector cannot be used with the RY of CC-Link.

Device	Device Symbol	Connector Pin No.	Functions/Applications
Forced stop	EMG	CN6-1	When EMG is turned off, the servo motor will be stopped forcibly. At this time, the servo turns off, and the dynamic brake operates to stop the servo motor immediately. The forced stop will be reset when EMG is turned on.
Forward rotation stroke end	LSP	CN6-3	For the details of the devices, refer to section 17.2.2 (1).
Reverse rotation stroke end	LSN	CN6-4	

(b) Output device

POINT

- The output devices assigned to the CN6 connector pins can be used for CC-Link RX.

Device	Device Symbol	Connector Pin No.	Functions/Applications
Ready	RD	CN6-14	For the details of the device, refer to section 17.2.2 (2).
Malfunction	ALM	CN6-15	ALM turns off when the power is switched off or the protective circuit is activated to shut off the base circuit. When no alarm occurs, ALM turns on in about 1.5 s after power-on. The logic of RX (n+1) A or RX (n+3)A) is reversed.

(2) Input signal

Signal name	Signal Symbol	Connector Pin No.	Functions/Applications
Manual pulse generator	PP	CN6-6	Not used in speed control operation.
	NP	CN6-19	

(3) Output signal

For the output interface of each connector pin (symbols in I/O division column in the table), refer to section 4.8.2.

Signal name	Symbol	Connector Pin No.	Functions/Applications	I/O division
Encoder A-phase pulse (differential line driver)	LA LAR	CN6-11 CN6-24	Outputs pulses per servo motor revolution set in parameter No.PA15 in the differential line driver type. In CCW rotation of the servo motor, the encoder B-phase pulse lags the encoder A-phase pulse by a phase angle of π/2. The relation between rotation direction and phase difference of the A-phase and B-phase pulses can be changed with parameter No.PC19.	DO-2
Encoder B-phase pulse (differential line driver)	LB LBR	CN6-12 CN6-25		
Encoder Z-phase pulse (differential line driver)	LZ LZR	CN6-13 CN6-26	The encoder zero-point signal is outputted in the differential line driver type. One pulse is outputted per servo motor revolution. The signal turns on when the zero-point position is reached. (negative logic) The minimum pulse width is about 400 μs. For home position return using this pulse, set the creep speed to 100 r/min or less.	DO-2

(4) Power supply

Signal name	Symbol	Connector Pin No.	Functions/Applications	I/O division
Digital I/F power supply input	DICOM	CN6-5	Input 24VDC (24VDC±10% 150mA) for the I/O interface. The power supply capacity varies with the number of I/O interface points to be used. For the sink interface, connect + of the 24VDC external power supply.	
Digital I/F common	DOCOM	CN6-17	Common terminal of input signals such as DOG and EMG of the servo amplifier. This is separated from LG. For the source interface, connect + of the 24VDC external power supply.	
MR-HDP01 open collector power input	OPC	CN6-18	Not used in speed control operation.	
Control common	LG	CN6-23	Common terminal for the encoder pulses (differential line driver) (LA, LAR, LB, LBR, LZ, LZR).	
Shield	SD	Plate	Connect the external conductive portion of the shielded cable.	

17.3.2 Detailed description of signals (devices)

(1) Forward rotation start and reverse rotation start

(a) Configure a sequence so that the forward rotation start (RYn1) or the reverse rotation start (RYn2) turns on after the main circuit is established. Each signal is invalid if it turns on before the main circuit is established. Normally, it is interlocked with the ready signal (RD).

(b) A start in the servo amplifier is made when the forward rotation start (RYn1) or the reverse rotation start (RYn2) turns on. The delay time of the servo amplifier's internal processing is max. 3ms. The delay time of other devices is max. 10ms.

(c) When a programmable controller is used, the on time of the forward rotation start (RYn1) or the reverse rotation start (RYn2) should be 6ms or longer to prevent a malfunction.

(d) During operation, neither the forward rotation start (RYn1) nor reverse rotation start (RYn2) is accepted.

(2) Torque limit

⚠ CAUTION

- If the torque limit is canceled during servo-lock, the servo motor may suddenly rotate depending on the position deviation from the command position.

(a) Torque limit and torque

By setting parameter No.PA11 (forward rotation torque limit) and parameter No.PA12 (reverse rotation torque limit), torque is always limited to the maximum value during operation. A relation between the limit value and servo motor torque is as follows.

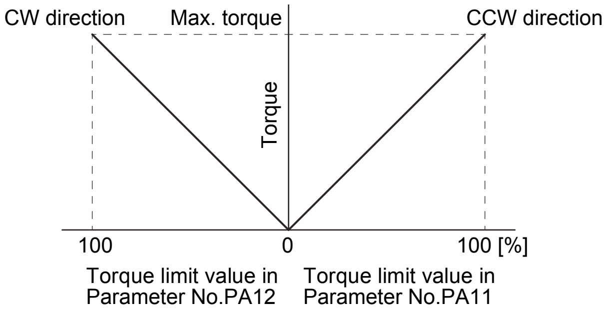

(b) Torque limit value selection

Torque is limited with the forward rotation torque limit (parameter No.PA11), the reverse rotation torque limit (parameter No.PA12), or the internal torque limit 2 (parameter No.PC35) as follows by using the internal torque limit selection (RY(n+2)6).

(Note) RY(n+2)6	Limit value status	Enabled torque limit	
		CCW power running/CW regeneration	CW power running/CCW regeneration
0		Parameter No.PA11	Parameter No.PA12
1	Parameter No.PC35 > Parameter No.PA11 Parameter No.PA12	Parameter No.PA11	Parameter No.PA12
	Parameter No.PC35 < Parameter No.PA11 Parameter No.PA12	Parameter No.PC35	Parameter No.PC35

Note. 0:OFF
1:ON

(c) Limiting torque (RXn4)

RXn4 turns on when the servo motor torque reaches the torque limited.

17.4 Switching power on for the first time

WARNING

- Do not operate the switches with wet hands. Otherwise, it may cause an electric shock.

CAUTION

- Before starting operation, check the parameters. Improper settings may cause some machines to operate unexpectedly.
- During power-on or for some time after power-off, the servo amplifier heat sink, regenerative resistor, servo motor, and others may become hot. Therefore, take safety measures, such as providing a cover, to prevent accidental contact of hands and parts (cables, etc.) with those components.
- During operation, never touch the rotor of the servo motor. Otherwise, it may cause injury.

When switching power on for the first time, follow this section to make a startup.

17.4.1 Startup procedure

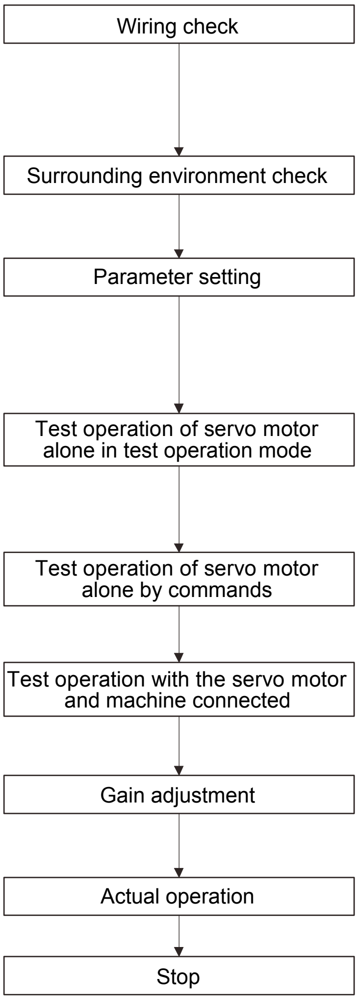

Check whether the servo amplifier and servo motor are wired correctly using visual inspection, DO forced output function (section 7.7.4, 8.5.7 (4)), etc. (Refer to section 17.4.2.)

Check the surrounding environment of the servo amplifier and servo motor. (Refer to section 17.4.3.)

Use the MR-PRU03 parameter unit or MR Configurator to set the parameters as necessary, such as the control mode and regenerative option selection. (Refer to section 17.8.)

For the test operation, disconnect the servo motor from the machine and operate the motor at the speed as low as possible to check whether the motor rotates correctly. (Refer to section 7.7 and 8.5.7.)

For the test operation, disconnect the servo motor from the machine and operate the motor at the speed as low as possible to check whether the motor rotates correctly.

Connect the servo motor with the machine, give operation commands from the controller, and check machine motions.

Make gain adjustment to optimize the machine motions. (Refer to chapter 9.)

Stop giving commands and stop operation.

17.4.2 Wiring check

(1) Power supply system wiring

Before switching on the main circuit and control circuit power supplies, check the following items.

(a) Power supply system wiring

The power supplied to the power input terminals (L1, L2, L3, L11, L21) of the servo amplifier must satisfy the defined specifications. (Refer to section 1.2.)

(b) Connection of servo amplifier and servo motor

1) The servo motor power outputs (U, V, and W) of the servo amplifier must match in phase with the power input terminals (U, V, and W) of the servo motor.

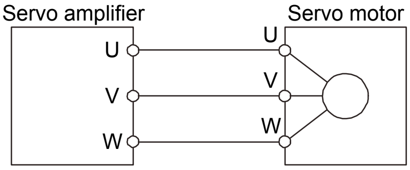

2) The power supplied to the servo amplifier should not be connected to the servo motor power outputs (U, V, and W). Otherwise, the connected servo amplifier and servo motor may fail.

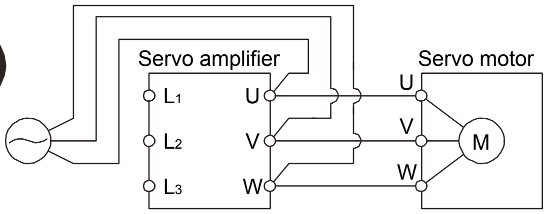

3) The earth terminal of the servo motor must be connected to the PE terminal of the servo amplifier.

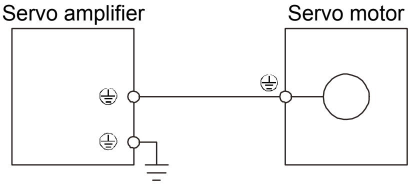

4) P_1 and P_2 (P_1 and P for 11kW or more) must be connected.

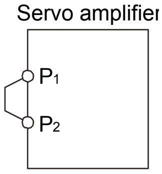

(c) When option and peripheral equipment are used

1) When the regenerative option is used for the 200V class servo amplifier of 3.5kW or less, or the 400V class servo amplifier of 2kW or less
- The lead wire between the P terminal and D terminal of CNP2 connector must not be connected.
- The regenerative option wires must be connected to the P terminal and C terminal.
- A twisted wire must be used. (Refer to section 14.2.)

2) When the regenerative option is used for the 200V class servo amplifier of 5kW or more, or the 400V class servo amplifier of 3.5kW or more
- The built-in regenerative resistor lead wires connected to the P terminal and C terminal of the TE1 terminal block must not be connected.

- The regenerative option wires must be connected to the P terminal and C terminal.
- A twisted wire must be used. (Refer to section 14.2.)

3) When the brake unit and the power regenerative converter are used for the servo amplifier of 5kW or more
   - The built-in regenerative resistor lead wires connected to the P terminal and C terminal must not be connected.
   - The brake unit, power regeneration converter or power regeneration common converter must be wired to the P terminal and N terminal. (Refer to section 14.3 to 14.5.)
   - A twisted wire must be used for the wiring over 5 m and under 10 m when the brake unit is used. (Refer to section 14.3.)

4) The power factor improving DC reactor must be connected between P1 and P2 (P1 and P for 11kW or more). (Refer to section 14.11.)

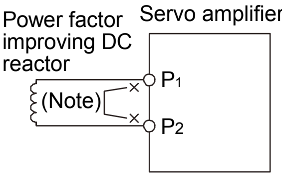

Note. Always disconnect P_1 and P_2 (P_1 and P for 11kW or more).

(2) I/O signal wiring

(a) The I/O signals must be connected correctly.
Use the DO forced output to forcibly turn on/off the pins of the CN6 connector.
This function can be used to perform a wiring check. In this case, switch on the control circuit power supply only.

(b) A 24VDC or higher voltage must not be applied to the pins of the CN6 connector.

(c) The SD and DOCOM of the CN6 connector must not be shorted.

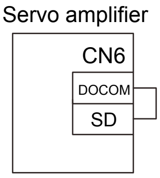

17.4.3 Surrounding environment

(1) Cable routing

(a) The wiring cables should not be stressed.

(b) The encoder cable should not be used in excess of its bending life. (Refer to section 13.4.)

(c) The connector of the servo motor should not be stressed.

(2) Environment

Signal cables and power cables are not shorted by wire offcuts, metallic dust or the like.

17.5 Startup

17.5.1 Power on and off procedures

(1) Power-on

Switch the power on in the following procedure. Always follow this procedure at power-on.

1) Switch off the servo-on (RYn0).

2) Make sure that the forward rotation start (RYn1) and the reverse rotation start (RYn2) are off.

3) Switch on the main circuit power supply and control circuit power supply.
When main circuit power/control circuit power is switched on, the servo amplifier display shows "b01" (if the servo amplifier has the station number of 1).

(2) Power-off

1) Make sure that the forward rotation start (RYn1) and the reverse rotation start (RYn2) are off.
2) Switch off the servo-on (RYn0).
3) Switch off the main circuit power supply and control circuit power supply.

17.5.2 Stop

If any of the following conditions occurs, the servo amplifier interrupts and stops the operation of the servo motor. Refer to section 4.11 for the servo motor with an electromagnetic brake.

(a) Servo-on (RYn0) off
The base circuit is shut off, and the servo motor coasts.

(b) Alarm occurrence
When an alarm occurs, the base circuit is shut off and the dynamic brake is operated to bring the servo motor to a sudden stop.

(c) Forced stop (EMG) off
The base circuit is shut off and the dynamic brake is operated to bring the servo motor to a sudden stop. Servo forced stop warning (AE6) occurs.

(d) Forward rotation stroke end (LSP) and reverse rotation stroke end (LSN) off
The servo motor is brought to a sudden stop to become the servo-lock status. Operation in the opposite direction is possible.

(e) Forward rotation start (RYn1) and reverse rotation start (RYn2) simultaneously on/off
The servo motor is decelerated to a stop. In this case, the servo-lock status is not made at the time of stop.

17.5.3 Test operation

Before starting an actual operation, perform a test operation to make sure that the machine operates normally. Refer to section 17.5.1 for how to power on and off the servo amplifier.

Test operation of the servo motor alone in JOG operation of test operation mode

In this step, confirm that the servo amplifier and servo motor operate normally.
With the servo motor disconnected from the machine, use the test operation mode and check whether the servo motor rotates correctly at the slowest speed. Refer to section 7.7 and 8.5.7 for the test operation mode.

Test operation of the servo motor alone by commands

In this step, confirm that the servo motor correctly rotates at the slowest speed under the commands from the controller.
Make sure that the servo motor rotates in the following procedure.

1) Switch on the forced stop (EMG) and servo-on (RYn0). When the servo amplifier is in the servo-on status, the ready (RD) is switched on.

2) Switch on the forward rotation stroke end (LSP) and the reverse rotation stroke end (LSN).

3) When the point table is designated from the controller to switch on the forward rotation start (RYn1) or reverse rotation start (RYn2), the servo motor starts rotating. Give a low speed command at first and check the rotation direction, etc. of the servo motor. If the machine does not operate in the intended direction, check the input signal.

Test operation with the servo motor and machine connected

In this step, connect the servo motor with the machine and confirm that the machine operates normally with the commands from the controller.
Make sure that the servo motor rotates in the following procedure.

1) Switch on the forced stop (EMG) and servo-on (RYn0). When the servo amplifier is in the servo-on status, the ready (RD) is switched on.

2) Switch on the forward rotation stroke end (LSP) and the reverse rotation stroke end (LSN).

3) When the point table is designated from the controller to switch on the forward rotation start (RYn1) or reverse rotation start (RYn2), the servo motor starts rotating. Give a low speed command at first and check the operation direction, etc. of the machine. If the machine does not operate in the intended direction, check the input signal. In the status display, check for any problems of the servo motor speed, load ratio, etc.

4) Check automatic operation with the program of the controller.

17.5.4 Parameter setting

POINT

- The encoder cable MR-EKCBL□M-L/H for the HF-MP series and HF-KP series servo motor requires the parameter No.PC22 setting to be changed depending on its length. Check if the parameter is set correctly. If it is not set correctly, the encoder error 1 (A16) will occur at power-on.

Encoder cable	Parameter No.PC22 setting
MR-EKCBL20M-L/H	0□□□ (initial value)
MR-EKCBL30M-H	1□□□
MR-EKCBL40M-H	
MR-EKCBL50M-H	

The servo amplifier can be used by merely changing the basic setting parameters (No.PA□□) and extension setting parameters (No.PC□□) mainly.
As necessary, set the gain filter parameters (No.PB□□) and I/O setting parameters (No.PD□□).

Parameter group	Main description
Basic setting parameters (No.PA□□)	Set the basic setting parameters first. In this parameter group, set the following items. Control mode selection Regenerative option selection Servo motor speed setting unit selection Auto tuning selection and adjustment Torque limit setting Encoder output pulse setting
Gain/filter parameters (No.PB□□)	If satisfactory operation cannot be achieved by the gain adjustment made by auto tuning, execute in-depth gain adjustment using this parameter group. This parameter group must also be set when the gain switching function is used.
Extension setting parameters (No.PC□□)	This parameter group is unique to MR-J3-□T servo amplifier.
I/O setting parameters (No.PD□□)	Set how to stop the stroke end (LSP and LSN).

17.5.5 Point table setting

Set the data for operation to the point table. The following shows the items to be set.

Item	Main description
Position data	Not used in speed control operation. Do not change the parameter.
Servo motor speed	Set the command speed of the servo motor for speed control operation. In the speed control operation, use the servo motor speed of the point table No.1 to 8.
Acceleration time constant	Set the acceleration time constant. In the speed control operation, use the acceleration time constant of the point table No.1 and 2.
Deceleration time constant	Set the deceleration time constant. In the speed control operation, use the deceleration time constant of the point table No.1 and 2.
Dwell	Not used in speed control operation. Do not change the parameter.
Sub function	Not used in speed control operation. Do not change the parameter.

17.5.6 Actual operation

Start actual operation after confirmation of normal operation by test operation and completion of the corresponding parameter settings.

17.6 Servo amplifier display

On the servo amplifier display (three-digit, seven-segment LED), check the status of communication with the CC-Link controller at power-on and station No., and diagnose a malfunction at occurrence of an alarm.

(1) Display sequence

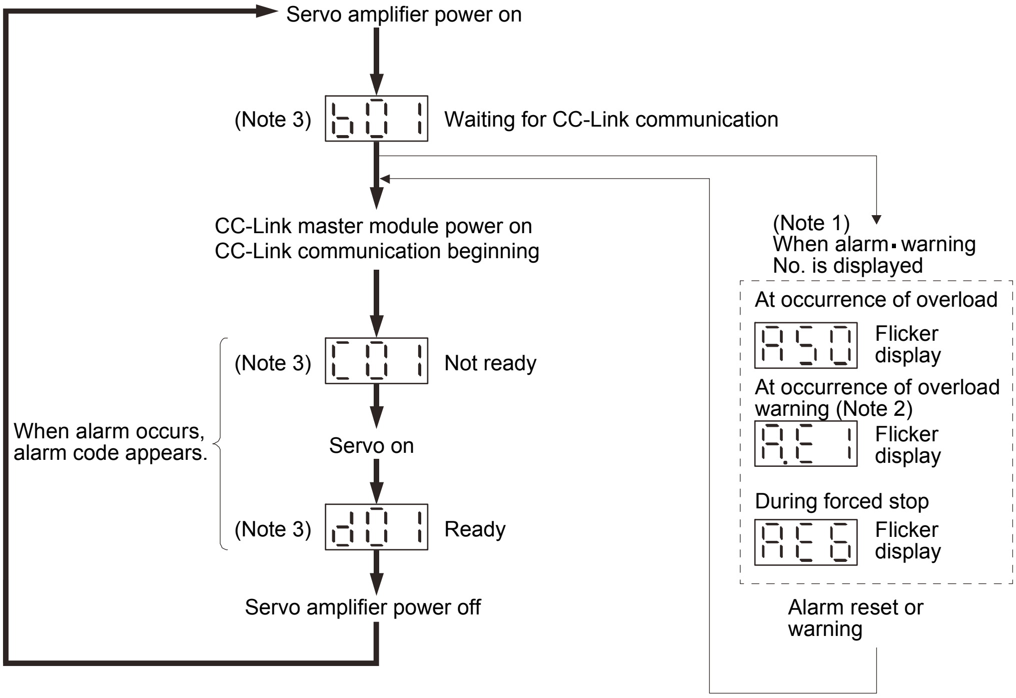

Note 1. Only the alarm and warning No. are displayed, but no axis No. is displayed.
2. If warning other than AE6 occurs during servo-on, the flickering decimal point on the second digit indicates that the servo amplifier is in the servo-on status.
3. b01 C02 ▪ ▪ ▪ d64 The last two digits indicate an axis number.
Station No.1 Station No.2 Station No.64
(The above example indicates axis No. 1.)

(2) Indication list

Display	Status	Description
b##	Waiting for CC-Link communication	・The servo amplifier power was switched on when the CC-Link master module power was off. ・The CC-Link master module is faulty.
(Note 1) d##	Ready	Indicates that initialization is completed, and the servo amplifier is in servo-on state and ready to operate.
(Note 1) C##	Not ready	Indicates that the servo amplifier is being initialized or an alarm has occurred.
(Note 2) A**	Alarm/Warning	Indicates the alarm No./warning No. that occurred. (Refer to section 17.9.4.)
888	CPU error	Indicates that a CPU watchdog error has occurred.
(Note 3) d00. C00.	(Note 3) Test operation mode	JOG operation, positioning operation, program operation, DO forced output.
(Note 1) d##. C##.		Motor-less operation

Note 1. ## denotes any of numerals 00 to 64 and what it means is listed below.

##	Description
00	Set to the test operation mode.
01	Station number 1
02	Station number 2
03	Station number 3
: :	: :
62	Station number 62
63	Station number 63
64	Station number 64

2. ** indicates the warning/alarm No.
3. MR Configurator or the MR-PRU03 parameter module is required.

17.7 Speed control operation

17.7.1 Changing speed by devices of speed selection 1 (RYnA) to speed selection 3 (RYnC) (common when 1 station/2 stations are occupied)

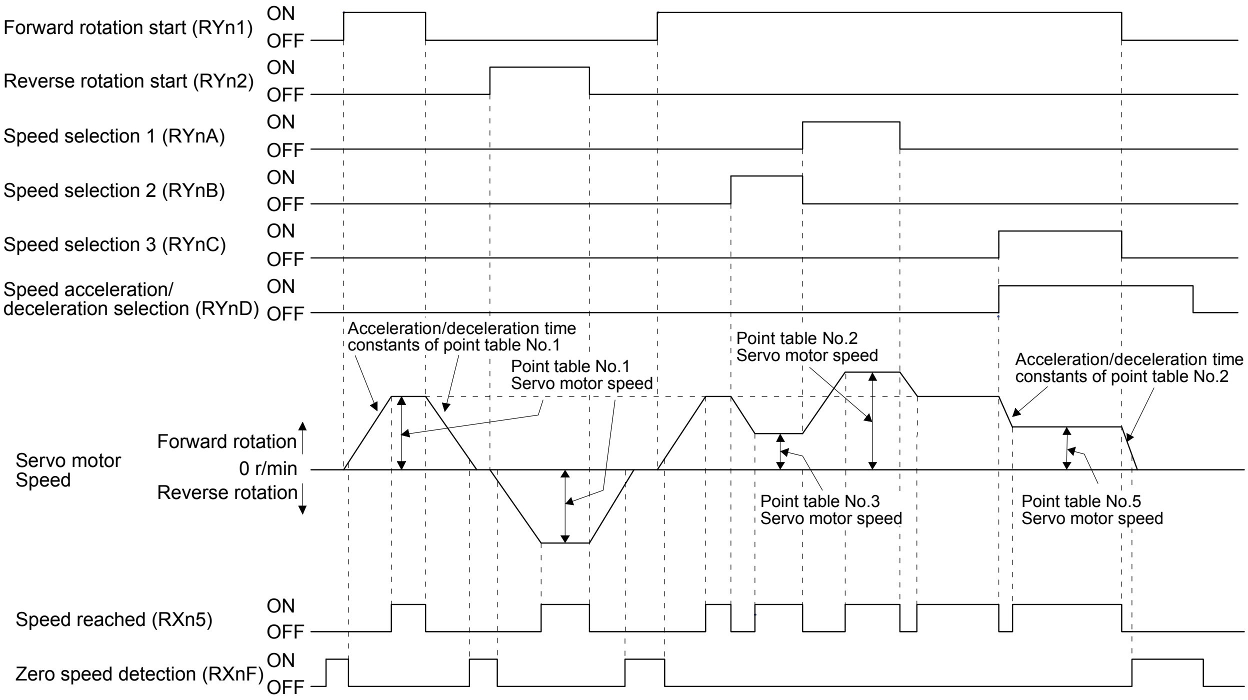

17.7.2 Changing speed by remote register (only when 2 stations are occupied)

(1) When parameter No.PC50=□□□0

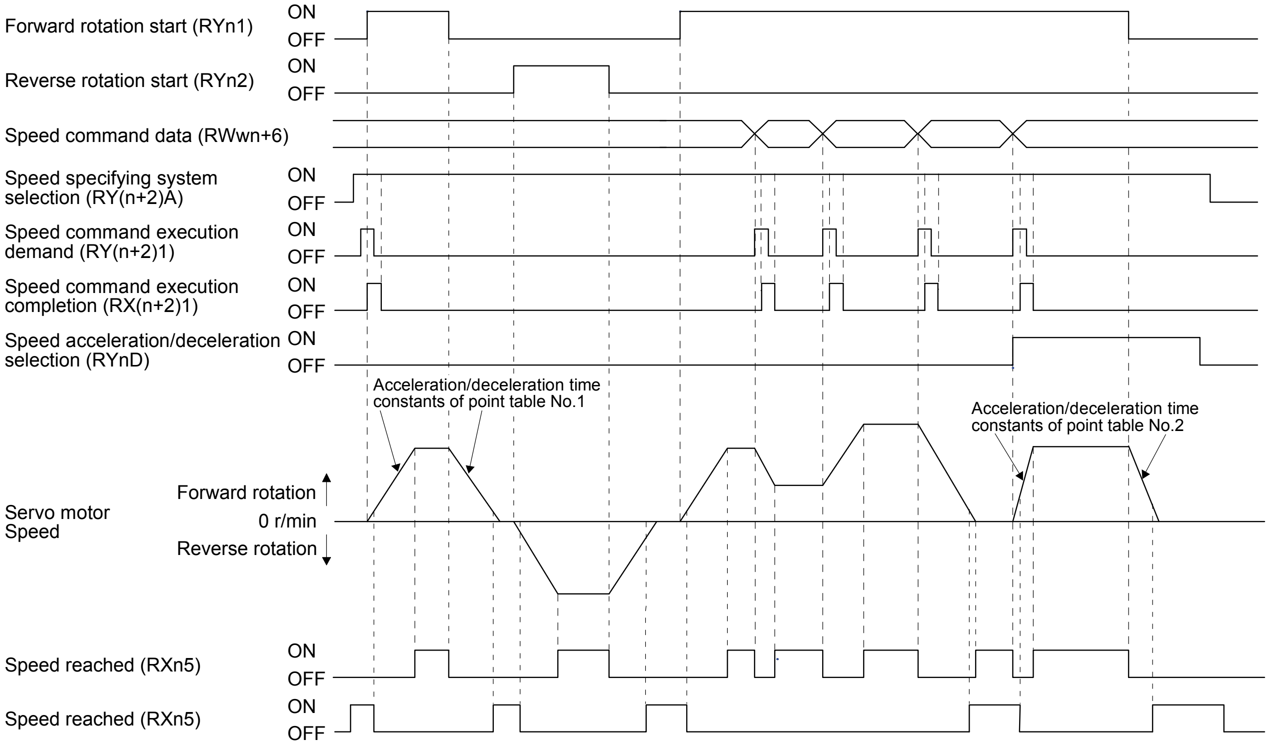

(2) When parameter No.PC50=□□□1

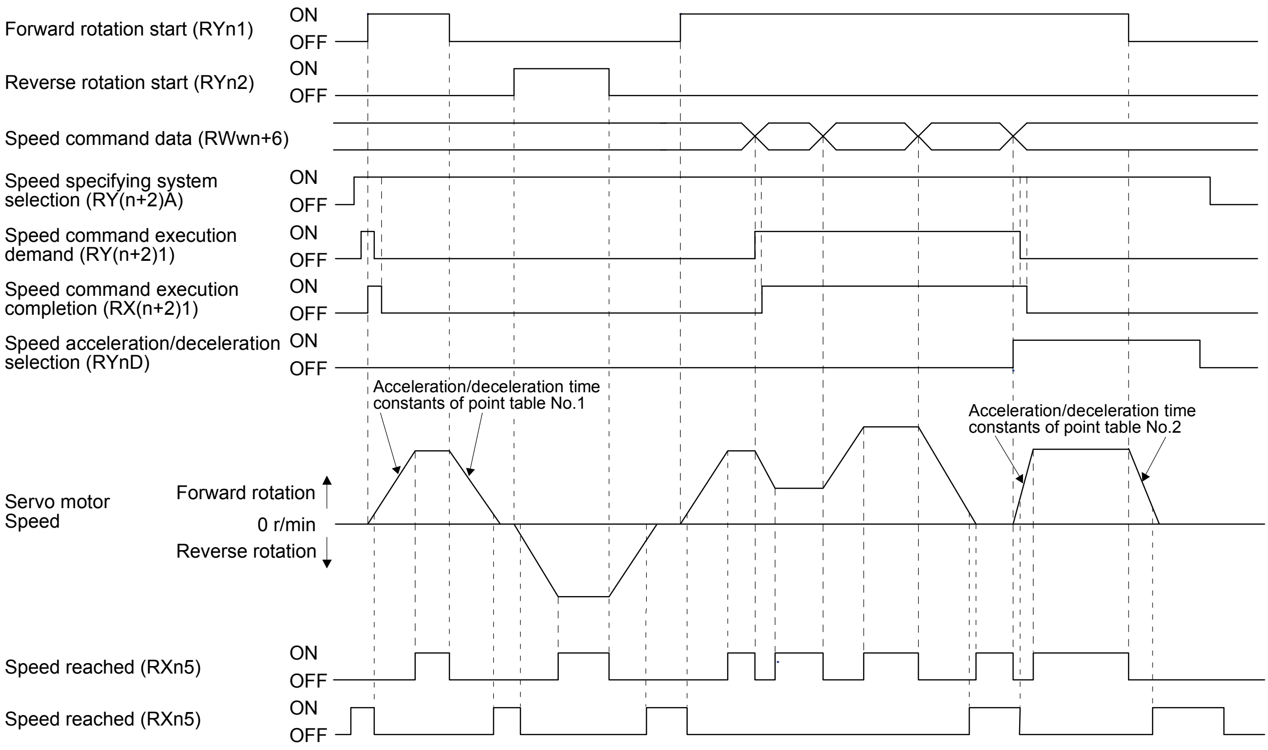

17.8 Parameter

⚠ CAUTION

- Never make a drastic adjustment or change to the parameter values as doing so will make the operation unstable.
- If fixed values are written in the digits of a parameter, do not change these values.
- Do not change parameters for manufacturer setting.
- Do not set values other than described setting values to each parameter.

POINT

- To enable a parameter whose symbol is preceded by *, cycle the power after setting it.

In this servo amplifier, the parameters are classified into the following groups on a function basis.

Parameter group	Main description
Basic setting parameters (No.PA□□)	Make basic settings with these parameters. Generally, the operation is possible only with these parameter settings.
Gain/filter parameters (No.PB□□)	Use these parameters when making gain adjustment manually.
Extension setting parameters (No.PC□□)	This parameter group is unique to MR-J3-□T servo amplifier.
I/O setting parameters (No.PD□□)	Use these parameters for setting how to stop the stroke end (LSP and LSN), etc.

Mainly setting the basic setting parameters (No.PA□□) allows the setting of the basic parameters at the time of introduction.

17.8.1 Basic setting parameters (No.PA□□)

(1) Parameter list

No.	Symbol	Name	Initial value	Unit
PA01	*STY	Control mode	0000h	
PA02	*REG	Regenerative option	0000h	
PA03		Not used in speed control operation.	0000h	
PA04		Do not change the parameter.	0000h	
PA05	*FTY	Feeding function selection	0000h	
PA06		Not used in speed control operation.	1	
PA07		Do not change the parameter.	1	
PA08	ATU	Auto tuning mode	0001h	
PA09	RSP	Auto tuning response	12	
PA10		Not used in speed control operation. Do not change the parameter.	100	
PA11	TLP	Forward rotation torque limit	100.0	%
PA12	TLN	Reverse rotation torque limit	100.0	%
PA13		For manufacturer setting	0002h	
PA14		Not used in speed control operation. Do not change the parameter.	0	
PA15	*ENR	Encoder output pulses	4000	pulse/rev
PA16		For manufacturer setting	0	
PA17			0000h	
PA18			0000h	
PA19	*BLK	Parameter writing inhibit	000Ch	

(2) Parameter writing inhibit

Parameter			Initial value	Unit	Setting range
No.	Symbol	Name			
PA19	*BLK	Parameter writing inhibit	000Ch		Refer to the text.

POINT

- To enable the parameter values, cycle the power after setting.

In the factory setting, this servo amplifier allows changes to the basic setting parameter, the gain/filter parameter and the extension setting parameter settings. With the setting of parameter No.PA19, writing can be disabled to prevent accidental changes.
The following table indicates the parameters which are enabled for reference and writing by the setting of parameter No.PA19. Operation can be performed for the parameters marked ○.

Parameter No.PA19 Setting value	Setting value Operation	Basic setting Parameter No.PA□□	Gain/Filter Parameter No.PB□□	Extension setting Parameter No.PC□□	I/O setting Parameter No.PD□□
0000h	Reference	○			
	Writing	○			
000Bh	Reference	○	○	○	
	Writing	○	○	○	
000Ch (initial value)	Reference	○	○	○	○
	Writing	○	○	○	○
100Bh	Reference	○			
	Writing	Parameter No.PA19 only			
100Ch	Reference	○	○	○	○
	Writing	Parameter No.PA19 only			

(3) Selection of operation method and HF-KP series servo motor maximum torque

Parameter			Initial value	Unit	Setting range
No.	Symbol	Name			
PA01	*STY	Control mode	0000h		Refer to the text.

POINT

- To enable the parameter values, cycle the power after setting.

Select an operation method and HF-KP series servo motor maximum torque.

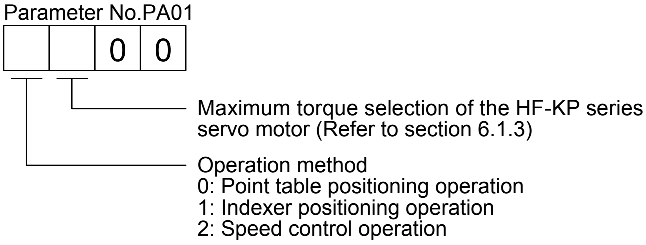

Maximum torque selection of the HF-KP series servo motor (Refer to section 6.1.3)

Operation method
0: Point table positioning operation
1: Indexer positioning operation
2: Speed control operation

(4) Selection of the regenerative option

Parameter			Initial value	Unit	Setting range
No.	Symbol	Name			
PA02	*REG	Regenerative option	0000h		Refer to the text.

POINT

- To enable the parameter values, cycle the power after setting.
- An incorrect setting may cause the regenerative option to burn.
- If a selected regenerative option is not for use with the servo amplifier, a parameter error (A37) occurs.

Set this parameter when using the regeneration option, brake unit, power regeneration converter, or power regeneration common converter.

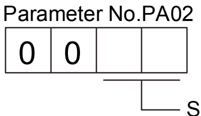

Selection of regenerative option
00: Regenerative option is not used
- For servo amplifier of 100W, regenerative resistor is not used.
- For servo amplifier of 200 to 7kW, built-in regenerative resistor is used.
- Supplied regenerative resistors or regenerative option is used with the servo amplifier of 11k to 22kW.

01: FR-BU2-(H)・FR-RC-(H)・FR-CV-(H)
02: MR-RB032
03: MR-RB12
04: MR-RB32
05: MR-RB30
06: MR-RB50(Cooling fan is required)
08: MR-RB31
09: MR-RB51(Cooling fan is required)
80: MR-RB1H-4
81: MR-RB3M-4(Cooling fan is required)
82: MR-RB3G-4(Cooling fan is required)
83: MR-RB5G-4(Cooling fan is required)
84: MR-RB34-4(Cooling fan is required)
85: MR-RB54-4(Cooling fan is required)
FA: When the supplied regenerative resistor is cooled by the cooling fan to increase the ability with the servo amplifier of 11k to 22kW.

(5) Selection of servo motor speed setting unit

Parameter			Initial value	Unit	Setting range
No.	Symbol	Name			
PA05	*FTY	Feeding function selection	0000h		Refer to the text.

POINT

- To enable the parameter values, cycle the power after setting.

Select the unit of the servo motor speed.

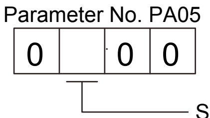

Servo motor speed setting unit selection
0: 1r/min Unit
1: 0.1r/min Unit
Setting to "1" will be as follows.
- The setting value of the servo motor speed will be limited to 6553.5 r/min.
- The "Servo motor speed" status will be displayed as 0.1 r/min unit.

(6) Auto tuning

Parameter			Initial value	Unit	Setting range
No.	Symbol	Name			
PA08	ATU	Auto tuning mode	0001h		Refer to the text.
PA09	RSP	Auto tuning response	12		1 to 32

Make gain adjustment using auto tuning. Refer to section 9.2 for details.

(a) Auto tuning mode (parameter No.PA08)
Select the gain adjustment mode.

Parameter No.PA08

0 0 0 □

Gain adjustment mode setting

Setting	Gain adjustment mode	Automatically set parameter No. (Note)
0	Interpolation mode	PB06・PB08・PB09・PB10
1	Auto tuning mode 1	PB06・PB07・PB08・PB09・PB10
2	Auto tuning mode 2	PB07・PB08・PB09・PB10
3	Manual mode	

Note. The parameters have the following names.

Parameter No.	Name
PB06	Load to motor inertia ratio
PB07	Model loop gain
PB08	Position loop gain
PB09	Speed loop gain
PB10	Speed integral compensation

(b) Auto tuning response (parameter No.PA09)

If the machine hunts or generates large gear sound, decrease the set value. To improve performance, such as shortening the settling time, increase the set value.

Setting value	Response	Guideline for machine resonance frequency [Hz]
1	Low response	10.0
2		11.3
3		12.7
4		14.3
5		16.1
6		18.1
7		20.4
8		23.0
9		25.9
10		29.2
11		32.9
12		37.0
13		41.7
14		47.0
15		52.9
16	Middle response	59.6
17	Middle response	67.1
18		75.6
19		85.2
20		95.9
21		108.0
22		121.7
23		137.1
24		154.4
25		173.9
26		195.9
27		220.6
28		248.5
29		279.9
30		315.3
31		355.1
32	High response	400.0

(7) Torque limit

Parameter			Initial value	Unit	Setting range
No.	Symbol	Name			
PA11	TLP	Forward rotation torque limit	100.0	%	0 to 100.0
PA12	TLN	Reverse rotation torque limit	100.0	%	0 to 100.0

You can limit the torque generated by the servo motor.

(a) Forward rotation torque limit (parameter No.PA11)

Set the parameter on the assumption that the maximum torque is 100 [%]. The parameter is for limiting the torque of the servo motor in the CCW power running or CW regeneration. No torque is generated when this parameter is set to "0.0".

(b) Reverse rotation torque limit (parameter No.PA12)

Set the parameter on the assumption that the maximum torque is 100 [%]. The parameter is for limiting the torque of the servo motor in the CW power running or CCW regeneration. No torque is generated when this parameter is set to "0.0".

(8) Encoder output pulses

Parameter			Initial value	Unit	Setting range
No.	Symbol	Name			
PA15	*ENR	Encoder output pulses	4000	pulse/rev	1 to 65535

POINT

- To enable the parameter values, cycle the power after setting.

Set the encoder pulses (A-phase and B-phase) output by the servo amplifier. Set the value 4 times greater than the A-phase and B-phase pulses.

You can use parameter No.PC19 to choose the output pulse setting or output dividing ratio setting.

The number of A-phase and B-phase pulses actually output is 1/4 times greater than the preset number of pulses.

The maximum output frequency is 4.6 Mpps (after multiplication by 4). Use this parameter within this range.

(a) For output pulse designation

Set "□□0□" (initial value) in parameter No.PC19.

Set the number of pulses per servo motor revolution.

Output pulse=set value [pulse/rev]

For instance, if "5600" is set to parameter No.PA15, the actual A/B-phase output pulses are as indicated below.

$$\text{A-phase and B-phase output pulses} = \frac{5600}{4} = 1400\ [\text{pulse}]$$

(b) For output dividing ratio setting

Set "□□1□" (initial value) in parameter No.PC19.

The number of pulses per servo motor revolution is divided by the set value.

$$\text{Output pulse} = \frac{\text{Resolution per servo motor revolutior}}{\text{Set value}}\ [\text{pulse/rev}]$$

For instance, if "8" is set to parameter No.PA15, the actual A/B-phase output pulses are as indicated below.

$$\text{A-phase and B-phase output pulses} = \frac{262144}{8} \cdot \frac{1}{4} = 8192\ [\text{pulse}]$$

17.8.2 Gain/filter parameters (No.PB□□)

(1) Parameter list

No.	Symbol	Name	Initial value	Unit
PB01	FILT	Adaptive tuning mode (adaptive filter II)	0000h	
PB02		Not used in speed control operation. Do not change the parameter.	0000h	
PB03		For manufacturer setting	0000h	
PB04		Not used in speed control operation. Do not change the parameter.	0	
PB05		For manufacturer setting	500	
PB06	GD2	Load to motor inertia ratio	7.0	Multiplier
PB07	PG1	Model loop gain	24	rad/s
PB08		Not used in speed control operation. Do not change the parameter.	37	
PB09	VG2	Speed loop gain	823	rad/s
PB10	VIC	Speed integral compensation	33.7	ms
PB11	VDC	Speed differential compensation	980	
PB12		For manufacturer setting	0	
PB13	NH1	Machine resonance suppression filter 1	4500	Hz
PB14	NHQ1	Notch shape selection 1	0000h	
PB15	NH2	Machine resonance suppression filter 2	4500	Hz
PB16	NHQ2	Notch shape selection 2	0000h	
PB17		Automatic setting parameter		
PB18	LPF	Low-pass filter setting	3141	rad/s
PB19		Not used in speed control operation. Do not change the parameter.	100.0	
PB20			100.0	
PB21		For manufacturer setting	0.00	
PB22			0.00	
PB23	VFBF	Low-pass filter selection	0000h	
PB24		Not used in speed control operation. Do not change the parameter.	0000h	
PB25		For manufacturer setting	0000h	
PB26	*CDP	Gain switching selection	0000h	
PB27	CDL	Gain switching condition	10	kpps pulse r/min
PB28	CDT	Gain switching time constant	1	ms
PB29	GD2B	Load to motor inertia ratio after gain switching	7.0	Multiplier
PB30		Not used in speed control operation. Do not change the parameter.	37	
PB31	VG2B	Speed loop gain after gain switching	823	rad/s
PB32	VICB	Speed integral compensation after gain switching	33.7	ms
PB33		Not used in speed control operation. Do not change the parameter.	100.0	
PB34			100.0	

No.	Symbol	Name	Initial value	Unit
PB35		For manufacturer setting	0.00	
PB36			0.00	
PB37			100	
PB38			0	
PB39			0	
PB40			0	
PB41			1125	
PB42			1125	
PB43			0004h	
PB44			0000h	
PB45			0000h	

(2) Detail list

No.	Symbol	Name and function	Initial value	Unit	Setting Range
PB01	FILT	Adaptive tuning mode (adaptive filter II) Select the setting method for adaptive tuning. Setting this parameter to "□□□1" (filter tuning mode) automatically changes the machine resonance suppression filter 1 (parameter No.PB13) and the notch shape selection 1 (parameter No.PB14). 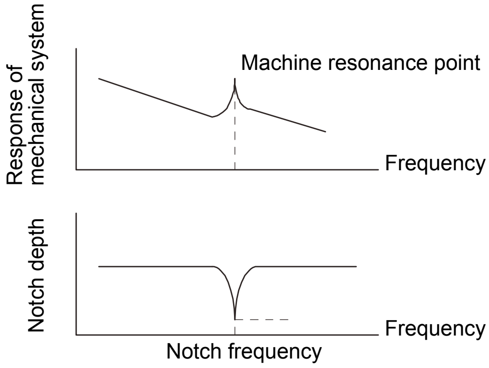 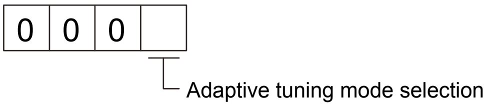 <table><tr><th>Setting value</th><th>Adaptive tuning mode</th><th>Automatically set parameter</th></tr><tr><td>0</td><td>Filter off</td><td>(Note)</td></tr><tr><td>1</td><td>Filter tuning mode</td><td>Parameter No.PB13 Parameter No.PB14</td></tr><tr><td>2</td><td>Manual mode</td><td></td></tr></table>Note. Parameter No.PB13 and PB14 are fixed to the initial values. When this parameter is set to"□□□1", the tuning is completed after the predetermined number of positioning operations are executed for the predetermined period of time, and the setting changes to"□□□2". When the adaptive tuning is not necessary, the setting changes to "□□□0". When this parameter is set to "□□□0", the initial values are set to the machine resonance suppression filter 1 and the notch shape selection 1. However, this does not occur in the servo-off status.	0000h		

No.	Symbol	Name and function	Initial value	Unit	Setting Range
PB02		Not used in speed control operation. Do not change the parameter.	0000h		
PB03		For manufacturer setting Do not change this value by any means.	0000h		
PB04		Not used in speed control operation. Do not change the parameter.	0		
PB05		For manufacturer setting Do not change this value by any means.	500		
PB06	GD2	Load to motor inertia ratio Used to set the motor inertia ratio to the servo motor shaft inertia moment. When the auto tuning mode 1or the interpolation mode is selected, the result of auto tuning is automatically used. (Refer to section 9.1.1.) In this case, the value varies between 0 and 100.0.	7.0	Multiplier	0 to 300.0
PB07	PG1	Model loop gain Set the response gain to the target position. Increase the gain to improve track ability in response to the command. When auto tuning mode 1 and 2 are set, the result of auto tuning is automatically used.	24	rad/s	1 to 2000
PB08		Not used in speed control operation. Do not change the parameter.	37		
PB09	VG2	Speed loop gain Set the gain of the speed loop. Set this parameter when vibration occurs on machines of low rigidity or large backlash. Increasing the setting value increases the response level but is more likely to generate vibration or noise. When auto tuning mode 1 and 2 and interpolation mode are set, the result of auto tuning is automatically used.	823	rad/s	20 to 50000
PB10	VIC	Speed integral compensation Set the integral time constant of the speed loop. Decreasing the setting value increases the response level but is more likely to generate vibration or noise. When auto tuning mode 1 and 2 and interpolation mode are set, the result of auto tuning is automatically used.	33.7	ms	0.1 to 1000.0
PB11	VDC	Speed differential compensation Set a differential compensation. Made valid when the proportional control (RY(n+2)7) is switched on.	980		0 to 1000
PB12		For manufacturer setting Do not change this value by any means.	0		
PB13	NH1	Machine resonance suppression filter 1 Set the notch frequency of the machine resonance suppression filter 1. Setting parameter No.PB01 (adaptive tuning mode) to "□□□1" automatically changes this parameter. When the parameter No.PB01 setting is "□□□0", the setting of this parameter is ignored.	4500	Hz	100 to 4500

<table>
<tr><th>No.</th><th>Symbol</th><th>Name and function</th><th>Initial value</th><th>Unit</th><th>Setting Range</th></tr>
<tr><td>PB14</td><td>NHQ1</td><td>Notch shape selection 1
Select the shape of the machine resonance suppression filter 1.
0 □ □ 0
Notch depth selection
<table>
<tr><th>Setting</th><th>Depth</th><th>Gain</th></tr>
<tr><td>0</td><td>Deep</td><td>-40dB</td></tr>
<tr><td>1</td><td>to</td><td>-14dB</td></tr>
<tr><td>2</td><td></td><td>-8dB</td></tr>
<tr><td>3</td><td>Shallow</td><td>-4dB</td></tr>
</table>
Notch width selection
<table>
<tr><th>Setting</th><th>Width</th><th>α</th></tr>
<tr><td>0</td><td>Standard</td><td>2</td></tr>
<tr><td>1</td><td>to</td><td>3</td></tr>
<tr><td>2</td><td></td><td>4</td></tr>
<tr><td>3</td><td>Wide</td><td>5</td></tr>
</table>
Setting parameter No.PB01 (adaptive tuning mode) to "□□□1" automatically changes this parameter.
When the parameter No.PB01 setting is "□□□0", the setting of this parameter is ignored.</td><td>0000h</td><td></td><td>Refer to the Name and function column.</td></tr>
<tr><td>PB15</td><td>NH2</td><td>Machine resonance suppression filter 2
Set the notch frequency of the machine resonance suppression filter 2.
Set parameter No.PB16 (Notch shape selection 2) to "□□□1" to enable this parameter.</td><td>4500</td><td>Hz</td><td>100
to
4500</td></tr>
<tr><td>PB16</td><td>NHQ2</td><td>Notch shape selection 2
Select the shape of the machine resonance suppression filter 2.
0 □ □ □
Machine resonance suppression filter 2 selection
0: Invalid
1: Valid
Notch depth selection
<table>
<tr><th>Setting</th><th>Depth</th><th>Gain</th></tr>
<tr><td>0</td><td>Deep</td><td>-40dB</td></tr>
<tr><td>1</td><td>to</td><td>-14dB</td></tr>
<tr><td>2</td><td></td><td>-8dB</td></tr>
<tr><td>3</td><td>Shallow</td><td>-4dB</td></tr>
</table>
Notch width selection
<table>
<tr><th>Setting</th><th>Width</th><th>α</th></tr>
<tr><td>0</td><td>Standard</td><td>2</td></tr>
<tr><td>1</td><td>to</td><td>3</td></tr>
<tr><td>2</td><td></td><td>4</td></tr>
<tr><td>3</td><td>Wide</td><td>5</td></tr>
</table></td><td>0000h</td><td></td><td>Refer to the Name and function column.</td></tr>
<tr><td>PB17</td><td></td><td>Automatic setting parameter
The value of this parameter is automatically set according to the set value of parameter No.PB06 (Load to motor inertia ratio).</td><td></td><td></td><td></td></tr>
</table>

No.	Symbol	Name and function	Initial value	Unit	Setting Range
PB18	LPF	Low-pass filter setting Set the low-pass filter. Setting parameter No.PB23 (Low-pass filter selection) to "□□0□" automatically changes this parameter. When parameter No.PB23 is set to "□□1□", this parameter can be set manually.	3141	rad/s	100 to 18000
PB19		Not used in speed control operation.	100.0		
PB20		Do not change the parameter.	100.0		
PB21		For manufacturer setting	0.00		
PB22		Do not change this value by any means.	0.00		
PB23	VFBF	Low-pass filter selection (Refer to section 10.5.) Select the low-pass filter. 0 0 □ 0 Low-pass filter selection 0: Automatic setting 1: Manual setting (parameter No.PB18 setting)	0000h		Refer to the Name and function column.
PB24		Not used in speed control operation. Do not change the parameter.	0000h		
PB25		For manufacturer setting Do not change this value by any means.	0000h		
PB26	*CDP	Gain switching selection Select the gain switching condition. (Refer to section 10.6.) 0 0 □ □ Gain switching selection The gain is switched depending on the setting value of parameter No.PB29 to PB32 with the following conditions. 0: Invalid 1: Gain switching (RY(n+2)8) 2: Command frequency (Parameter No.PB27 setting) 3: Droop pulse value (Parameter No.PB27 setting) 4: Servo motor speed (Parameter No.PB27 setting) Gain switching condition 0: Valid at more than condition (Valid when gain switching (RY(n+2)8) is on) 1: Valid at less than condition (Valid when gain switching (RY(n+2)8) is off)	0000h		Refer to the Name and function column.
PB27	CDL	Gain switching condition Set the value of the gain switching condition (command frequency, droop pulses, or servo motor speed) selected in parameter No.PB26. The set value unit differs depending on the switching condition item. (Refer to section 10.6.)	10	kpps pulse r/min	0 to 9999
PB28	CDT	Gain switching time constant Set the time constant at which the gains will change under the conditions set in parameters No.PB26 and PB27. (Refer to section 10.6.)	1	ms	0 to 100
PB29	GD2B	Load to motor inertia ratio after gain switching Set the load to motor inertia moment when the gain switching is enabled. This parameter is enabled when the auto tuning is disabled (parameter No.PA08: □□□3).	7.0	Multiplier	0 to 300.0

No.	Symbol	Name and function	Initial value	Unit	Setting Range
PB30		Not used in speed control operation. Do not change the parameter.	37		
PB31	VG2B	Gain switching speed loop gain Set the speed loop gain when the gain switching is enabled. This parameter is enabled when the auto tuning is disabled (parameter No.PA08: □□□3).	823	rad/s	20 to 50000
PB32	VICB	Gain switching speed integral compensation Set the speed integral compensation when the gain switching is enabled. This parameter is enabled when the auto tuning is disabled (parameter No.PA08: □□□3).	33.7	ms	0.1 to 5000.0
PB33		Not used in speed control operation. Do not change the parameter.	100.0		
PB34			100.0		
PB35		For manufacturer setting Do not change this value by any means.	0.00		
PB36			0.00		
PB37			100		
PB38			0		
PB39			0		
PB40			0		
PB41			1125		
PB42			1125		
PB43			0004h		
PB44			0000h		
PB45			0000h		

17.8.3 Extension setting parameters (No.PC□□)

(1) Parameter list

No.	Symbol	Name and function	Initial value	Unit
PC01		For manufacturer setting	0000h	
PC02		Not used in speed control operation. Do not change the parameter.	0000h	
PC03			0001h	
PC04			500	
PC05			10	
PC06			0	
PC07			0	
PC08			1000	
PC09			100	
PC10			15.0	
PC11			0	
PC12			100	
PC13	*STC	S-pattern acceleration/deceleration time constant	0	ms
PC14		Not used in speed control operation. Do not change the parameter.	0	
PC15		For manufacturer setting	0000h	
PC16	MBR	Electromagnetic brake sequence output	100	ms
PC17	ZSP	Zero speed	50	r/min
PC18	*BPS	Alarm history clear	0000h	
PC19	*ENRS	Encoder output pulse selection	0000h	
PC20	*SNO	Station number setting	0	station
PC21	*SOP	RS-422 communication function selection	0000h	
PC22	*COP1	Function selection C-1	0000h	
PC23		For manufacturer setting	0000h	
PC24		Not used in speed control operation. Do not change the parameter.	0000h	
PC25		For manufacturer setting	0000h	
PC26	*COP5	Function selection C-5	0000h	
PC27		For manufacturer setting	0000h	
PC28		Not used in speed control operation. Do not change the parameter.	0000h	
PC29		For manufacturer setting	0000h	
PC30	*DSS	Remote register-based speed specifying method selection	0000h	
PC31		Not used in speed control operation. Do not change the parameter.	0	
PC32				
PC33			0	
PC34				
PC35	TL2	Internal torque limit 2	100.0	%
PC36		For manufacturer setting	0000h	
PC37		Not used in speed control operation. Do not change the parameter.	0	
PC38				
PC39			0	
PC40				
PC41		For manufacturer setting	0000h	
PC42			0000h	

No.	Symbol	Name and function	Initial value	Unit
PC43		For manufacturer setting	0000h	
PC44			0000h	
PC45		Not used in speed control operation. Do not change the parameter.	0000h	
PC46			0000h	
PC47			0000h	
PC48		For manufacturer setting	0000h	
PC49			0000h	
PC50	*COPA	Function selection C-A	0000h	Refer to the Name and function column.

(2) Detail list

No.	Symbol	Name and function	Initial value	Unit	Setting Range
PC01		For manufacturer setting Do not change this value by any means.	0000h		
PC02		Not used in speed control operation. Do not change the parameter.	0000h		
PC03			0001h		
PC04			500		
PC05			10		
PC06			0		
PC07			0		
PC08			1000		
PC09			100		
PC10			15.0		
PC11			0		
PC12			100		
PC13	*STC	S-pattern acceleration/deceleration time constant Set this parameter to insert S-pattern acceleration/deceleration time constants for the acceleration/deceleration time constants of the point table. (Refer to section 6.3.3.)	0	ms	0 to 1000
PC14		Not used in speed control operation. Do not change the parameter.	0		
PC15		For manufacturer setting Do not change this value by any means.	0000h		
PC16	MBR	Electromagnetic brake sequence output Set a delay time (Tb) from when the electromagnetic brake interlock (MBR) is turned off until when the base circuit is shut-off.	100	ms	0 to 1000
PC17	ZSP	Zero speed Set the output range of the zero speed detection (ZSP). The zero speed detection (ZSP) has a hysteresis width of 20 r/min. (Refer to section 17.2.2 (2).)	50	r/min	0 to 10000
PC18	*BPS	Alarm history clear This parameter is used to clear the alarm history. 0 0 0 □ Alarm history clear 0: Invalid 1: Valid When alarm history clear is made valid, the alarm history is cleared at next power-on After the alarm history is cleared, the setting is automatically made invalid (reset to 0).	0000h		Refer to the Name and function column.

No.	Symbol	Name and function	Initial value	Unit	Setting Range
PC19	*ENRS	Encoder output pulse selection Select the encoder output pulse direction and the encoder output pulse setting. 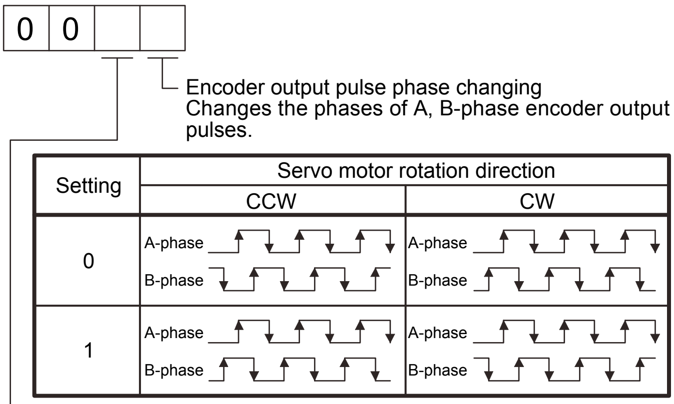 Encoder output pulse phase changing Changes the phases of A, B-phase encoder output pulses. Encoder output pulse setting selection (refer to parameter No.PA15). 0: Output pulse setting 1: Dividing ratio setting 2: Outputs the encoder pulse without processing it.	0000h		Refer to the Name and function column.
PC20	*SNO	Station number setting Specify the station number for RS-422 serial communication. Make sure to set one station number for one axis. Setting one station number for multiple axes will disable a normal communication.	0	station	0 to 31
PC21	*SOP	RS-422 communication function selection Select the RS-422 communication function. 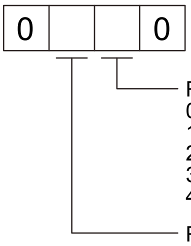 RS-422 communication baud rate selection 0: 9600 [bps] 1: 19200 [bps] 2: 38400 [bps] 3: 57600 [bps] 4: 115200[bps] RS-422 communication response delay time 0: Invalid 1: Valid, reply sent after delay time of 800μs or more	0000h		Refer to the Name and function column.
PC22	*COP1	Function selection C-1 Select how to execute the encoder cable communication method. 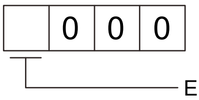 Encoder cable communication method selection 0: Two-wire type 1: Four-wire type Incorrect setting will result in an encoder alarm 1 (A16) or encoder alarm 2 (A20).	0000h		Refer to the Name and function column.

No.	Symbol	Name and function	Initial value	Unit	Setting Range
PC23		For manufacturer setting Do not change this value by any means.	0000h		
PC24		Not used in speed control operation. Do not change the parameter.	0000h		
PC25		For manufacturer setting Do not change this value by any means.	0000h		
PC26	*COP5	Function selection C-5 Select the stroke limit warning (A99). 0 0 0 □ Stroke limit warning(A99) selection 0: Valid 1: Invalid When "1" is set, A99 will not occur if the forward rotation stroke end (LSP) or reverse rotation stroke end (LSN) turns off.	0000h		Refer to the Name and function column.
PC27		For manufacturer setting Do not change this value by any means.	0000h		
PC28		Not used in speed control operation. Do not change the parameter.	0000h		
PC29		For manufacturer setting Do not change this value by any means.	0000h		
PC30	*DSS	Remote register-based speed specifying method selection This parameter is made valid when the speed specifying method selection (RY(n+2)A) is turned on with 2 stations occupied. Select how to receive a speed command. When 1 station is occupied, selecting "0100" will result in a parameter error. 0 □ 0 0 Setting — Speed command 0 — Specifying the speed selection No. 1 — Specifying the servo motor speed	0000h		Refer to the Name and function column.
PC31		Not used in speed control operation. Do not change the parameter.	0		
PC32					
PC33			0		
PC34					
PC35	TL2	Internal torque limit 2 Set the parameter on the assumption that the maximum torque is 100 [%]. The parameter is for limiting the torque of the servo motor. No torque is generated when this parameter is set to "0".	100.0	%	0 to 100.0
PC36		For manufacturer setting Do not change this value by any means.	0000h		
PC37		Not used in speed control operation. Do not change the parameter.	0		
PC38					

No.	Symbol	Name and function	Initial value	Unit	Setting Range
PC39		Not used in speed control operation. Do not change the parameter.	0		
PC40					
PC41		For manufacturer setting Do not change this value by any means.	0000h		
PC42			0000h		
PC43			0000h		
PC44			0000h		
PC45		Not used in speed control operation. Do not change the parameter.	0000h		
PC46			0000h		
PC47			0000h		
PC48		For manufacturer setting Do not change this value by any means.	0000h		
PC49			0000h		
PC50	*COPA	Function selection C-A □ 0 0 □ Remote register speed command data reflection timing selection 0: Reflecting at the rising edge of the Speed command execution demand (RY(n + 2)1) 1: Always reflecting while the Position command execution demand (RY(n + 2)1) is on CC-Link communication error (A8D) extension function selection 0: No extension function 1: CC-Link communication error (A8D) detection delay Use parameter No. PD25 to set how long to delay the occurrence timing of the CC-Link communication error (A8D). Setting of this digit is available with servo amplifiers with software version A8 or later. When this parameter is set using MR Configurator with software version C5 or earlier, the parameter name is not displayed. However, the setting value is changeable. Follow the instructions in this Instruction Manual to set the value.	0000h		Refer to the Name and function column.

(3) Alarm history clear

Use the MR Configurator or MR-PRU03 parameter module to check the alarm history. The servo amplifier stores the latest six alarm events after its first power-on. To manage the alarm history in the actual operation, clear the alarm history using parameter No.PC18 (Alarm history clear) before starting operation. The setting of the parameter will be enabled when the power is cycled. After the alarm history is cleared, parameter No.PC18 (Alarm history clear) is set back to "□□□0" automatically.

Parameter No.PC18

0 0 0 □

Alarm history clear
0: Invalid (not cleared)
1: Valid (cleared)

17.8.4 I/O setting parameters (No.PD□□)

(1) Parameter list

No.	Symbol	Name	Initial value	Unit
PD01	*DIA1	Input signal automatic on selection 1	0000h	
PD02		For manufacturer setting	0000h	
PD03	*DIA3	Input signal automatic on selection 3	0000h	
PD04		Not used in speed control operation. Do not change the parameter.	0000h	
PD05		For manufacturer setting	0000h	
PD06		Not used in speed control operation. Do not change the parameter.	002Bh	
PD07			000Ah	
PD08			000Bh	
PD09			0002h	
PD10			0003h	
PD11			0024h	
PD12	*DIN1	External DI function selection 1	0C00h	
PD13		For manufacturer setting	0000h	
PD14		Not used in speed control operation. Do not change the parameter.	0800h	
PD15		For manufacturer setting	0000h	
PD16		Not used in speed control operation. Do not change the parameter.	0000h	
PD17		For manufacturer setting	0000h	
PD18			0000h	
PD19	*DIF	Input filter setting	0002h	
PD20	*DOP1	Function selection D-1	0010h	
PD21		For manufacturer setting	0000h	
PD22		Not used in speed control operation. Do not change the parameter.	0000h	
PD23		For manufacturer setting	0000h	
PD24	*DOP5	Function selection D-5	0000h	
PD25	A8DT	CC-Link communication error (A8D) detection time	0000h	ms
PD26		Not used in speed control operation. Do not change the parameter.	0064h	
PD27		For manufacturer setting	0000h	
PD28			0000h	
PD29			0000h	
PD30			0000h	

(2) Detail list

<table>
<tr><th>No.</th><th>Symbol</th><th>Name and function</th><th>Initial value</th><th>Unit</th><th>Setting Range</th></tr>
<tr><td>PD01</td><td>*DIA1</td><td>Input signal automatic on selection 1
Select input devices to turn on automatically.
The ⧅ indicates the manufacturer setting. Never change the setting.

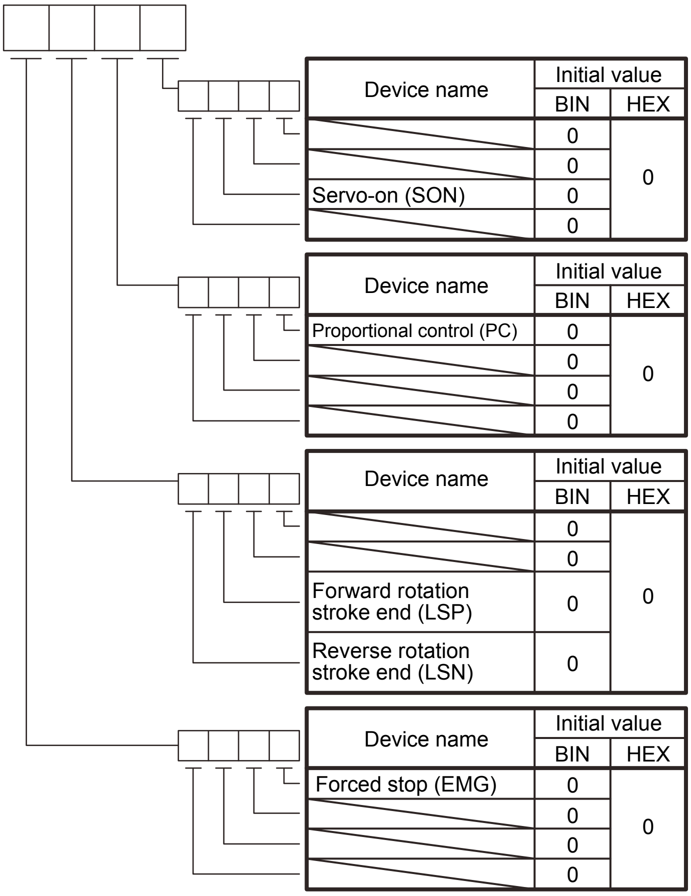

<table>
<tr><th rowspan="2">Device name</th><th colspan="2">Initial value</th></tr>
<tr><th>BIN</th><th>HEX</th></tr>
<tr><td></td><td>0</td><td rowspan="4">0</td></tr>
<tr><td></td><td>0</td></tr>
<tr><td>Servo-on (SON)</td><td>0</td></tr>
<tr><td></td><td>0</td></tr>
</table>

<table>
<tr><th rowspan="2">Device name</th><th colspan="2">Initial value</th></tr>
<tr><th>BIN</th><th>HEX</th></tr>
<tr><td>Proportional control (PC)</td><td>0</td><td rowspan="4">0</td></tr>
<tr><td></td><td>0</td></tr>
<tr><td></td><td>0</td></tr>
<tr><td></td><td>0</td></tr>
</table>

<table>
<tr><th rowspan="2">Device name</th><th colspan="2">Initial value</th></tr>
<tr><th>BIN</th><th>HEX</th></tr>
<tr><td></td><td>0</td><td rowspan="4">0</td></tr>
<tr><td></td><td>0</td></tr>
<tr><td>Forward rotation stroke end (LSP)</td><td>0</td></tr>
<tr><td>Reverse rotation stroke end (LSN)</td><td>0</td></tr>
</table>

<table>
<tr><th rowspan="2">Device name</th><th colspan="2">Initial value</th></tr>
<tr><th>BIN</th><th>HEX</th></tr>
<tr><td>Forced stop (EMG)</td><td>0</td><td rowspan="4">0</td></tr>
<tr><td></td><td>0</td></tr>
<tr><td></td><td>0</td></tr>
<tr><td></td><td>0</td></tr>
</table>

BIN 0: Used for CC-Link or an external input signal
BIN 1: Automatic on

For example, when servo-on (RYn0) is turned on, the setting value is "□□□4".</td><td>0000h</td><td></td><td>Refer to the Name and function column.</td></tr>
<tr><td>PD02</td><td></td><td>For manufacturer setting
Do not change this value by any means.</td><td>0000h</td><td></td><td></td></tr>
</table>

<table>
<tr><th>No.</th><th>Symbol</th><th>Name and function</th><th>Initial value</th><th>Unit</th><th>Setting Range</th></tr>
<tr><td>PD03</td><td>*DIA3</td><td>Input signal automatic on selection 3
Select input devices to turn on automatically.
The ⧄ indicates the manufacturer setting. Never change the setting.
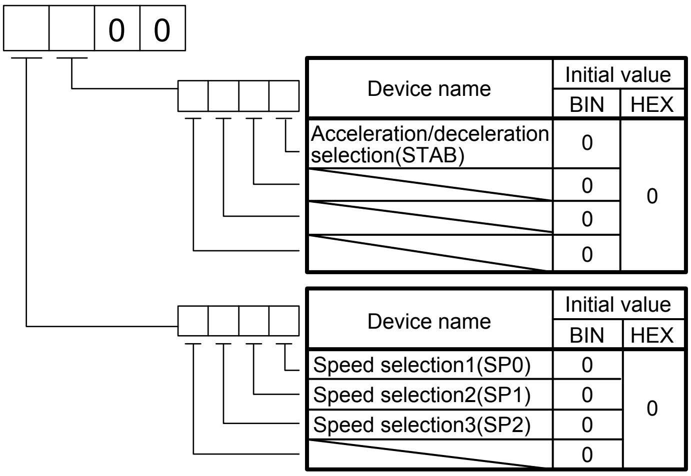

<table>
<tr><th rowspan="2">Device name</th><th colspan="2">Initial value</th></tr>
<tr><th>BIN</th><th>HEX</th></tr>
<tr><td>Acceleration/deceleration selection(STAB)</td><td>0</td><td rowspan="4">0</td></tr>
<tr><td></td><td>0</td></tr>
<tr><td></td><td>0</td></tr>
<tr><td></td><td>0</td></tr>
</table>
<table>
<tr><th rowspan="2">Device name</th><th colspan="2">Initial value</th></tr>
<tr><th>BIN</th><th>HEX</th></tr>
<tr><td>Speed selection1(SP0)</td><td>0</td><td rowspan="4">0</td></tr>
<tr><td>Speed selection2(SP1)</td><td>0</td></tr>
<tr><td>Speed selection3(SP2)</td><td>0</td></tr>
<tr><td></td><td>0</td></tr>
</table>
BIN 0: Use for CC-Link
BIN 1: Automatic on

For example, when speed acceleration/deceleration selection (RYnD) is turned on, the setting value is "□1□□".</td><td>0000h</td><td></td><td>Refer to the Name and function column.</td></tr>
<tr><td>PD04</td><td></td><td>Not used in speed control operation.
Do not change the parameter.</td><td>0000h</td><td></td><td></td></tr>
<tr><td>PD05</td><td></td><td>For manufacturer setting
Do not change this value by any means.</td><td>0000h</td><td></td><td></td></tr>
<tr><td>PD06</td><td rowspan="6"></td><td rowspan="6">Not used in speed control operation.
Do not change the parameter.</td><td>002Bh</td><td rowspan="6"></td><td rowspan="6"></td></tr>
<tr><td>PD07</td><td>000Ah</td></tr>
<tr><td>PD08</td><td>000Bh</td></tr>
<tr><td>PD09</td><td>0002h</td></tr>
<tr><td>PD10</td><td>0003h</td></tr>
<tr><td>PD11</td><td>0024h</td></tr>
<tr><td>PD12</td><td>*DIN1</td><td>External DI function selection 1
Set any signal read from the CN6 connector.
The ⧄ indicates the manufacturer setting. Never change the setting.
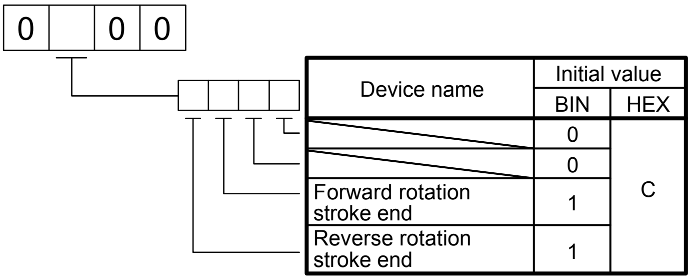

<table>
<tr><th rowspan="2">Device name</th><th colspan="2">Initial value</th></tr>
<tr><th>BIN</th><th>HEX</th></tr>
<tr><td></td><td>0</td><td rowspan="4">C</td></tr>
<tr><td></td><td>0</td></tr>
<tr><td>Forward rotation stroke end</td><td>1</td></tr>
<tr><td>Reverse rotation stroke end</td><td>1</td></tr>
</table>
BIN 0: Use for CC-Link
BIN 1: Use for CN6 connector external input signal</td><td>0C00h</td><td></td><td>Refer to the Name and function column.</td></tr>
</table>

No.	Symbol	Name and function	Initial value	Unit	Setting Range
PD13		For manufacturer setting Do not change this value by any means.	0000h		
PD14		Not used in speed control operation. Do not change the parameter.	0800h		
PD15		For manufacturer setting Do not change this value by any means.	0000h		
PD16		Not used in speed control operation. Do not change the parameter.	0000h		
PD17		For manufacturer setting Do not change this value by any means.	0000h		
PD18			0000h		
PD19	*DIF	Input filter setting Select the input filter. 0 0 0 Input filter If external input signal causes chattering due to noise, etc., input filter is used to suppress it. 0: None 1: 0.888[ms] 2: 1.777[ms] 3: 2.660[ms] 4: 3.555[ms] 5: 4.444[ms]	0002h		Refer to the Name and function column.
PD20	*DOP1	Function selection D-1 Select the stop processing at the time when the forward rotation stroke end (LSP)/reverse rotation stroke end (LSN) is off, and select the base circuit status at the time when the reset (RY(N+1)A or RY(n+3)A) is on. 0 0 Stopping method for Forward rotation stroke end (LSP) off or Reverse rotation stroke end (LSN) off 0: Sudden stop 1: Slow stop Selection of base circuit status at reset (RY(n+1)A or RY(n+3)A) on 0: Base circuit shut off 1: Base circuit not shut off	0010h		Refer to the Name and function column.
PD21		For manufacturer setting Do not change this value by any means.	0000h		
PD22		Not used in speed control operation. Do not change the parameter.	0000h		
PD23		For manufacturer setting Do not change this value by any means.	0000h		

No.	Symbol	Name and function	Initial value	Unit	Setting Range
PD24	*DOP5	Function selection D-5 Select the output status of the warning (RXnA). 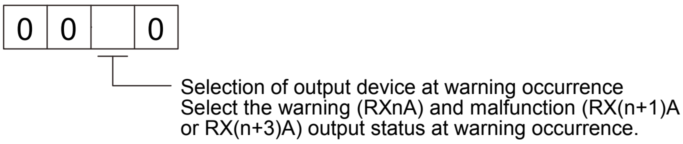 Selection of output device at warning occurrence Select the warning (RXnA) and malfunction (RX(n+1)A or RX(n+3)A) output status at warning occurrence. 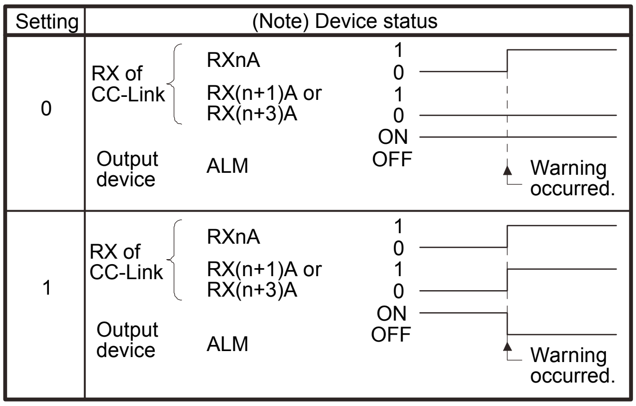 Note. 0: OFF 1: ON	0000h		Refer to the Name and function column.

No.	Symbol	Name and function	Initial value	Unit	Setting Range
PD25	A8DT	CC-Link communication error (A8D) detection time Select "CC-Link communication error (A8D) detection delay" with parameter No.PC50 to enable this parameter. When parameter No.PC50 is set to "0000h", 10ms is set. Set a value converted from decimal to hexadecimal. The setting range is up to 1000ms. A value exceeding the setting range will be limited within the range. For example) If "03E8h" is set, 1000ms will be set. The converted decimal value of "1388h" is 10000ms, but it is limited to 1000ms, which is the upper limit of the setting range. ⚠ CAUTION ▪ If not detecting CC-Link communication error (A8D), use the initial setting value for the communication time-out detection time. When you change the setting value, do not set an unnecessarily long time period. Doing so interferes swift stop operation at an occurrence of CC-Link communication error (A8D). This parameter is available with servo amplifiers with software version A8 or later. When this parameter is set using MR Configurator with software version C5 or earlier, the parameter name is not displayed. However, the setting value is changeable. Follow the instructions in this Instruction Manual to set the value.	0000h	ms	0000h to 03E8h
PD26		Not used in speed control operation. Do not change the parameter.	0064h		
PD27		For manufacturer setting Do not change this value by any means.	0000h		
PD28			0000h		
PD29			0000h		
PD30			0000h		

17.9 Troubleshooting

17.9.1 Troubleshooting at start-up

⚠ CAUTION
- Never make a drastic adjustment or change to the parameter values as doing so will make the operation unstable.

POINT
- Using MR Configurator, you can refer to the reason for rotation failure, etc.

The following faults may occur at start-up. If any of such faults occurs, take the corresponding action.

No.	Occurrence stage	Fault	Investigation	Possible cause	Reference
1	Power on	▪ The 7-segment LED display is not lit. ▪ 7-segment LED display flickers.	Not improved if connectors CN6, CN2 and CN3 are disconnected.	1. Power supply voltage fault 2. Servo amplifier is faulty.	
			Improved when connectors CN6 is disconnected.	Power supply of CN6 cabling is shorted.	
			Improved when connector CN2 is disconnected.	1. Power supply of encoder cabling is shorted. 2. Encoder is faulty.	
			Improved when connector CN3 is disconnected.	Power supply of CN3 cabling is shorted.	
		Alarm occurs.	Remove cause.		Section 17.9.4
2	Switch on servo-on	Alarm occurs.	Remove cause.		Section 17.9.4
		Servo motor shaft is not servo-locked (is free).	1. Check the display to see if the servo amplifier is ready to operate. 2. Check the external I/O signal indication to see if the servo-on is on.	1. Servo-on is not on. (wiring mistake) 2. Interface power supply (24 V DC) is not supplied.	Section 8.5.4
3	Gain adjustment	Rotation ripples (speed fluctuations) are large at low speed.	Make gain adjustment in the following procedure. 1. Increase the auto tuning response level. 2. Repeat acceleration and deceleration three or four times to complete auto tuning.	Gain adjustment fault	Chapter 9
		Large load inertia moment causes the servo motor shaft to oscillate side to side.	If the servo motor can be driven safely, repeat acceleration and deceleration three or four times to complete auto tuning.	Gain adjustment fault	Chapter 9
4	Cyclic operation	Position shift occurs	Confirm the command position, current position, cumulative feedback pulses and actual servo motor position.	Pulse counting error, etc. due to noise.	

17.9.2 State at error occurrence

If an error occurs during operation, it will be the state shown below.

Error location	Description	Operation mode	
		Test operation	CC-Link operation
Servo side alarm occurrence	Servo operation	Stop	Stop
	CC-Link data communication	Continue	Continue
CC-Link communication error	Servo operation	Stop	Stop
	CC-Link data communication	Stop	Stop
Programmable controller error STOP	Servo operation	Continue	Stop
	CC-Link data communication	Stop	Stop
Servo side warning occurrence	Servo operation	Stop	Continue
	CC-Link data communication	Continue	Continue

17.9.3 CC-Link communication error

The table below shows the detailed description of the communication alarm display area. The servo amplifier has four LED indications.

L.RUN: Lit at normal reception of refresh data. Turned off when data is not received for a given period of time.
SD : Lit when send data is "0".
RD : Lit when the carrier of reception data is detected.
L.ERR: Lit when the data addressed to the host is in CRC or abort error.

(Note) Communication alarm display LED				Fault
L.RUN	SD	RD	L.ERR	
○	◎	◎	◎	Normal communication is made, but a CRC error sometimes occurs due to noise.
○	◎	◎	●	Normal communication
○	◎	●	◎	Hardware fault
○	◎	●	●	Hardware fault
○	●	◎	◎	Receive data results in CRC error, disabling a response.
○	●	◎	●	Data does not reach the host.
○	●	●	◎	Hardware fault
○	●	●	●	Hardware fault
●	◎	○	●	Hardware fault
●	◎	◎	◎	Polling response is made, but refresh receive is in CRC error.
●	◎	◎	●	Hardware fault, or manufacturer setting switch (SW2) changed
●	◎	●	◎	Hardware fault
●	◎	●	●	Hardware fault
●	●	◎	◎	Data addressed to the host resulted in CRC error.
●	●	◎	●	Data does not reach the host, or the data addressed to the host cannot be received due to noise.
●	●	●	◎	Hardware fault
●	●	●	○	Baud rate setting illegal
●	●	○	○	Station number setting illegal
●	○	○	◎	Baud rate or station number setting changed midway (ERROR flickers for about 0.4s.)
●	●	●	●	Data cannot be received due to power-off, power supply failure, open cable, etc. WDT error occurrence (hardware error)

Note. ○:Lit ●:Extinguished ◎:Flicker

17.9.4 When an alarm or warning has occurred

> **POINT**
>
> - As soon as an alarm occurs, turn the servo off, and shut off the main circuit power.
> - Parameter error (A37) events and warning events are not recorded in the alarm history.

When an error occurs during operation, the corresponding alarm or warning is displayed as shown in the following table. If any alarm or warning has occurred, refer to section 11.4.2 and 11.4.3 to take the appropriate action. When an alarm occurs, malfunction (ALM) turns off.

After the cause of an alarm is removed, the alarm can be deactivated in any of the methods marked with ○ in the alarm deactivation column. Warnings are automatically canceled after the cause of occurrence is removed.

To troubleshoot any problem without an alarm or warning, refer to section 17.9.6 to remove its cause.

	Display	Name	Alarm deactivation		
			Power supply OFF→ON	(Note 3) MR Configurator parameter unit	(Note 2) Alarm reset
Alarm	A10	Undervoltage	○	○	○
	A12	Memory error 1 (RAM)	○		
	A13	Clock error	○		
	A15	Memory error 2 (EEP-ROM)	○		
	A16	Encoder error 1 (at power-on)	○		
	A17	Board error	○		
	A19	Memory error 3 (Flash-ROM)	○		
	A1A	Motor combination error	○		
	A20	Encoder error 2 (during runtime)	○		
	A21	Encoder error 3 (during runtime)	○		
	A24	Main circuit error	○	○	○
	A25	Absolute position erased	○		
	A30	Regenerative error	(Note 1) ○	(Note 1) ○	(Note 1) ○
	A31	Overspeed	○	○	○
	A32	Overcurrent	○		
	A33	Overvoltage	○	○	○
	A35	Command pulse frequency error	○	○	○
	A37	Parameter error	○		
	A45	Main circuit device overheat	(Note 1) ○	(Note 1) ○	(Note 1) ○
	A46	Servo motor overheat	(Note 1) ○	(Note 1) ○	(Note 1) ○
	A47	Cooling fan error	○		
	A50	Overload 1	(Note 1) ○	(Note 1) ○	(Note 1) ○
	A51	Overload 2	(Note 1) ○	(Note 1) ○	(Note 1) ○
	A52	Error excessive	○	○	○
	A61	Operation alarm	○	○	○
	A8A	Serial communication time-out error	○	○	○
	A8D	CC-Link communication error	○	○	○
	A8E	Serial communication error	○	○	○
	888	Watchdog	○		

	Display	Name
Warning	A90	Home position return incomplete warning
	A92	Battery cable disconnection warning
	A96	Home position setting warning
	A98	Software limit warning
	A99	Stroke limit warning
	A9D	CC-Link warning 1
	A9E	CC-Link warning 2
	A9F	Battery warning
	AE0	Excessive regeneration warning
	AE1	Overload warning 1
	AE3	Absolute position counter warning
	AE6	Servo forced stop warning
	AE8	Cooling fan speed reduction warning
	AE9	Main circuit off warning
	AEC	Overload warning 2
	AED	Output watt excess warning

Note 1. Wait for about 30 minutes as cooling time after removing the cause of occurrence, then deactivate the alarm.

2. Turns on RY(n+1)A or RY(n+3)A.

3. Clicking the "Alarm reset" button on the "Alarm display" screen of MR Configurator allows an alarm to be deactivated. Pressing the "STOP RESET" key of the parameter unit allows an alarm to be deactivated.

17.9.5 Point table error

If a point table error occurs, the parameter error (A37) occurs as well. The parameter No. of the parameter error (A37) and the details of the point table error are displayed.

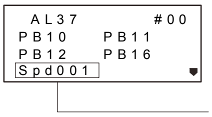

```
 AL37         #00
PB10    PB11
PB12    PB16
Spd001
```

Point table error details
For the point table No.1 speed data error

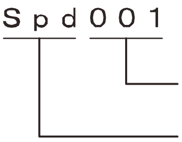

Point table No. with error

Error item
- Spd: speed
- Acc: acceleration time constant
- Dec: deceleration time constant

17.9.6 Problems without an alarm or warning

POINT

- If the servo amplifier, servo motor, or encoder malfunctions, the following status may occur.

The following shows example problems without an alarm or warning and their possible causes. Remove each cause by referring to this section.

Description	Check method	Possible cause	Action
The LED display disappears.	When the display is turned on by disconnecting all connectors except the power supply, check if the disconnected wires are shorted.	The external I/O terminal is shorted.	Check the wiring of I/O signals.
	Check if the control circuit power supply of the servo amplifier is off.	The control circuit power supply is not applied.	Turn on the control circuit power supply.
	Check if the voltage of the control circuit power supply dropped.	The voltage of the control circuit power supply has dropped.	Set the control circuit power supply voltage within the rated range.
The servo motor does not operate.	Check if warning (A99) is occurring.	Forward rotation stroke end (LSP) and reverse rotation stroke end (LSN) are not on.	Switch on the forward rotation stroke end (LSP) and reverse rotation stroke end (LSN).
	Check the connection of the servo motor.	The output terminals (U, V, W) of the servo amplifier do not match the input terminals (U, V, W) of the servo motor.	Connect each phase of the U, V, and W correctly.
	Check if warning (AE9) is occurring.	The servo-on was turned on while the main circuit power of servo amplifier is off.	Turn on the main circuit power supply.
	Check if a servo alarm or warning is occurring.	A servo alarm occurred.	Check the alarm content and remove its cause.
	Check the on/off state of servo-on and reset.	Servo-on is off.	Turn on servo-on.
		Reset is on.	Turn off reset.
	Check the setting of parameter No.PA01 (control mode).	The setting of parameter No.PA01 (control mode) is incorrect.	Check the setting of parameter No.PA01 (control mode).
	Check if the generated torque exceeds the torque limit value. 1. Check the "instantaneous torque" in the status display. 2. Check the torque ripple with the "Graph" command of "Monitor" menu on MR Configurator.	1. The maximum torque is insufficient. Servo capacity is insufficient or load is too large.	1. Reduce the load by changing the mass and shape of work. 2. Reduce the effective load ratio by increasing acceleration/deceleration time.
		2. An unintended torque limit is enabled. Or the setting of the torque limit is 0 (no torque is generated). (Set with Parameter PA11, PA12, PC35)	Review the torque limit setting.
	Check the point table setting.	The setting of point tables is incorrect.	Review the point table setting.
	Check if the load side is interfering.	The load side is interfering with the servo motor.	Remove the interference of the load side.
	For a servo motor with an electromagnetic brake, check the power supply of the electromagnetic brake.	The electromagnetic brake has not been released.	Turn on the power supply of the electromagnetic brake, and release the electromagnetic brake.

Description	Check method	Possible cause	Action
The speed of the servo motor is not increased. Or the speed is increased too much.	Check the settings of the speed command and electronic gear.	The setting of the speed command and electronic gear are incorrect.	Review the settings of the speed command and electronic gear.
	Check the servo motor power cable.	The output circuit is open phase.	Review the wiring of the servo motor power cable.
	Check if the voltage of the main circuit power supply dropped.	The voltage of the main circuit power supply has dropped.	1. Set the main circuit power supply within the permissible voltage fluctuation range of specifications. 2. Check the wiring of the main circuit power supply.
	For a servo motor with an electromagnetic brake, check the power supply of the electromagnetic brake.	The electromagnetic brake has not been released.	Turn on the power supply of the electromagnetic brake to release the brake.
The servo motor vibrates with low frequency.	If the servo motor can be driven safely, repeat acceleration and deceleration three or four times to complete auto tuning.	Failed to estimate the load to motor inertia ratio by auto tuning. If the auto tuning mode 2 or the manual mode is being used, the setting of load to motor inertia ratio (parameter No.PB06) is incorrect.	Adjust gains. (Refer to chapter 9.) If the auto tuning mode 2 or the manual mode is being used, review the setting of load to motor inertia ratio (parameter No.PB06).
	Check the command from the controller.	The command from the controller is unstable.	1. Review the command from the controller. 2. Check if the cable for a command has any failure, such as a disconnection.
	Check if the mechanical part is malfunctioning. (Example) 1. If the timing belt is loose. 2. If it has abrasion.	Load of the mechanical part has changed.	1. Readjust the gain. (Refer to chapter 9.) 2. Maintain the mechanical part.
	Check if the required torque of the machine exceeds the maximum torque of the servo motor.	Torque during acceleration/deceleration is overshooting exceeding the limit of the servo motor when the motor stops.	Reduce the load by increasing the acceleration and deceleration time or reducing the mass of the workpiece.
	Increase the auto tuning response (parameter No.PA09). (Other than manual mode)	1. The servo gain is low. 2. The auto tuning response is low.	Increase the auto tuning response, and readjust the gain. (Refer to chapter 9.)

Description	Check method	Possible cause	Action
An unusual noise is occurring at the servo motor.	1. If the servo motor can be driven safely, repeat acceleration and deceleration three or four times to complete auto tuning. 2. Reduce the auto tuning response (parameter No.PA09). (Except for the manual mode)	1. The servo gain is high. 2. The auto tuning response is high.	Decrease the auto tuning response, and readjust the gain. (Refer to chapter 9.)
	If the servo motor can be driven safely, remove the load, and check for a noise only on the servo motor.	If there is noise, the life of the bearing.	Change the servo motor.
		If there is no noise, increase the backlash of the mechanical part.	Perform adjustment on the load side.
	For a servo motor with an electromagnetic brake, check the dragging of the brake.	1. The sequence of releasing the electromagnetic brake is incorrect. 2. Failure of power supply for the electromagnetic brake.	1. Check the sequence of releasing the electromagnetic brake. 2. Check the power supply for the electromagnetic brake.
	The brake rattles when using a servo motor with an electromagnetic brake.	The noise is due to a gap between the connections of brake, not a fault.	
The servo motor vibrates.	1. If the servo motor can be driven safely, repeat acceleration and deceleration three or four times to complete auto tuning. 2. Reduce the auto tuning response (parameter No.PA09). (Except for the manual mode)	1. The servo gain is too high. 2. The auto tuning response is too high.	Decrease the auto tuning response, and readjust the gain. (Refer to chapter 9.)
	If the servo motor can be driven safely, execute the adaptive tuning.	The machine is vibrating (resonating).	Adjust the machine resonance suppression filter. (Refer to section 10.3.)
	Display the cumulative feedback pulses in "high speed monitor" command of "monitor" menu on MR Configurator, and check if its numerical value is skipping.	Feedback pulses are being superposed due to superimposed noise in the encoder cable.	Please take countermeasures against noise by laying the encoder cable apart from power cables, etc.
	Check if there is a backlash on the machine part.	There is a backlash between the servo motor and the machine (such as a gear and coupling).	Adjust the backlash on the coupling and the machine part.
	Check the mounting part of the servo motor.	The rigidity of the servo motor mounting part is low.	Increase the rigidity of the mounting part by methods, such as increasing the board thickness and reinforcing the part with ribs.

Description	Check method	Possible cause	Action
The servo motor vibrates.	Check the servo motor power cable.	The output circuit is open phase.	Review the wiring of the servo motor power cable.
	Check if the vibration varies depending on the speed.	An unbalanced torque of the machine side is large.	Adjust the balance of the machine side.
	Check the mounting accuracy of the servo motor and machine.	The eccentricity due to a core gap is large.	Review the direct accuracy.
	Check the load for the servo motor axis.	The load for the servo motor axis is large.	Adjust the load for the shaft within the specifications of the servo motor. For the shaft permissible load, refer to "Servo Motor Instruction Manual (Vol. 2)".
	Check the vibration from outside.	An external vibration propagated to the servo motor.	Prevent the vibration from the external vibration source.
The rotation accuracy is low. (The rotation speed is unstable.)	1. If the servo motor can be driven safely, repeat acceleration and deceleration three times or more to complete auto tuning. 2. Increase the auto tuning response (parameter No.PA09). (Except for manual mode)	1. The servo gain is low. 2. The auto tuning response is low.	Increase the auto tuning response, and readjust the gain. (Refer to chapter 9.)
	Check if the limiting torque (TLC) is in ON. 1. Check with the external I/O signal display in the diagnostic mode. 2. Check with "Input/output I/F Display" command of "Monitor" menu on MR Configurator.	An unintended torque limit is enabled. (When the torque limit is enabled, the torque limit (TLC) is ON.)	Cancel the torque limit.
	Check if the maximum torque exceeds the torque limit value. 1. Check the "instantaneous torque" in the status display. 2. Check the torque ripple with “Graph” command of "Monitor" menu on MR Configurator .	The maximum torque is insufficient. 1. Shortage of servo capacity. 2. Too large load.	1. Reduce the load by changing the mass and shape of the workpiece. 2. Reduce the effective load ratio by increasing acceleration/deceleration time.
		The setting of the torque limit is incorrect. (Set with parameter PA11, PA12, PC35.)	Check the torque limit setting.
Unsteady vibration at a stop.	1. If the servo motor can be driven safely, repeat acceleration and deceleration three or four times to complete auto tuning. 2. Increase the auto tuning response (parameter No.PA09). (Other than manual mode)	1. The servo gain is low. 2. The auto tuning response is low.	Increase the auto tuning response, and readjust the gain. (Refer to chapter 9.)
The servo motor starts rotating upon the power-on of the servo amplifier, or the servo motor starts rotating upon servo-on.	Check if the servo-on is turned ON.	Servo-on has been on at power-on.	Check the controller programs.
	For a servo motor with an electromagnetic brake, check the timing of releasing the electromagnetic brake.	1. The sequence of releasing the electromagnetic brake is incorrect. 2. Failure of power supply for the electromagnetic brake.	1. Check the sequence of releasing the electromagnetic brake. 2. Check the power supply for the electromagnetic brake.
	Check the servo motor power cable.	The output circuit is open phase.	Check the wiring of the servo motor power cable.

Description	Check method	Possible cause	Action
Overshoot/under shoot occurs.	1. Check the velocity waveform with "Graph" command of "Monitor" menu on MR Configurator, and check if overshoot/undershoot is occurring. 2. If the servo motor can be driven safely, repeat acceleration and deceleration three times or more to complete auto tuning.	1. The servo gain is low or too high. 2. The auto tuning response is low or too high.	Adjust the auto tuning response, and readjust the gain. (Refer to chapter 9.)
	Check if the maximum torque exceeds the torque limit value. 1. Check the "instantaneous torque" in the status display. 2. Check the torque ripple with "Graph" command of "Monitor" menu on MR Configurator.	The maximum torque is insufficient. 1. Shortage of servo capacity. 2. Too large load.	1. Reduce the load by changing the mass and shape of the workpiece. 2. Reduce the effective load ratio by increasing acceleration/deceleration time.
		The setting of the torque limit is incorrect. (Set with parameter PA11, PA12, PC35.)	Review the torque limit setting.
	Check if there is a backlash on the machine part.	There is a backlash between the servo motor and the machine (such as a gear and coupling).	Adjust the backlash on the coupling and the machine part.
Communication with the servo amplifier fails using MR Configurator.	Check if they are on-line.	They are off-line.	Set them to on-line. Select "on-line" in the system setting of the "Set-up" menu.
	Check if the communication cable has any failure such as damage.	Communication cable fault.	Change the communication cable.
	Check the communication settings, such as the baud rate and ports. Check with "system setting" command of "Set up" menu.	The communication setting is incorrect.	Set the communication correctly.
	Check if the model selection is set correctly. Check with "system setting" command of "Set up" menu.	The model being connected differs from the model set in the model selection.	Set the model setting correctly.
	In the device manager on the personal computer, check if "MITSUBISHI MELSERVO USB Controller" is being displayed under the USB (Universal Serial Bus) controller.	The driver is not set correctly.	Delete an unknown device or other devices, cycle the power of the servo amplifier, and then set the driver again according to Found New Hardware Wizard. For details, refer to Help of MR Configurator.

Description	Check method	Possible cause	Action
An abnormal value is displayed in the monitor values of MR Configurator.	Check if the model selection is set correctly. Check with "system setting" command of "Set up" menu.	The model being connected differs from the model set in the model selection.	Set the model correctly.
For a servo motor with an electromagnetic brake, the brake went out.	Remove the servo motor and all the wiring from the machine, and check if the servo motor shaft can be rotated by the hands. (If it is rotated by the hands, the electromagnetic brake has a failure.)	Expiration of life or a failure of electromagnetic brake. For the life of electromagnetic brake, refer to "Servo Motor Instruction Manual (Vol. 2)".	Change the servo motor.
The coasting distance of the servo motor became longer.	Check if the load was increased.	If the load was increased, the permissible load to motor inertia ratio of the dynamic brake was exceeded. (Refer to section 13.3.)	1. Reduce the load. 2. Change the servo amplifier.
	For servo motor with an electromagnetic brake 1. Check if the external relay connected to the electromagnetic brake interlock (MBR) operates normally. 2. Check if the electromagnetic brake is malfunctioning.	1. An external relay is malfunctioning. 2. The wiring of electromagnetic brake interlock (MBR) is incorrect. 3. Expiration of life or a failure of electromagnetic brake.	1. Change the external relay. 2. Check the wiring. 3. Change the servo motor.

MEMO

App. 1 Signal layout recording paper

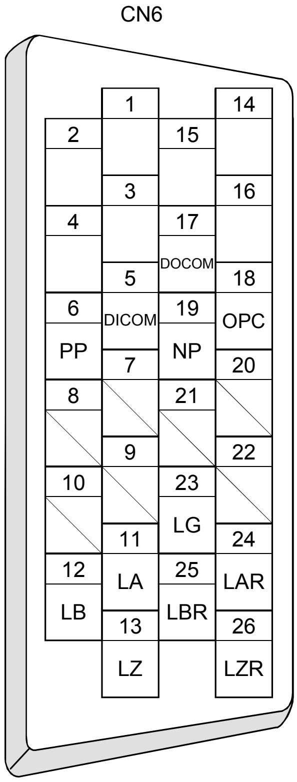

App. 2 Twin type connector: outline drawing for 721-2105/026-000(WAGO)

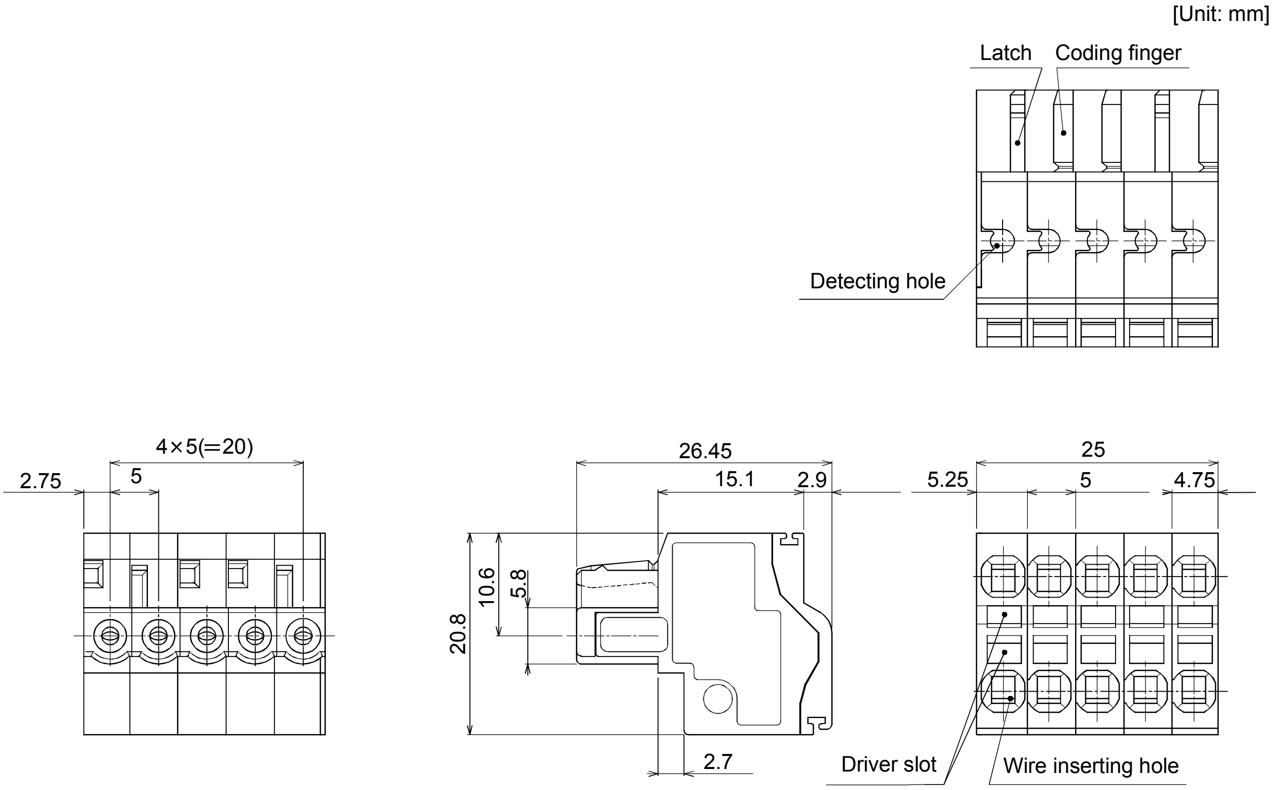

App. 3 MR-J3-200T-RT servo amplifier

Connectors (CNP1, CNP2, and CNP3) and appearance of MR-J3-200T servo amplifier have been changed from June 2008 production. Model name of the existing servo amplifier is changed to MR-J3-200T-RT. The difference between new MR-J3-200T servo amplifier and existing MR-J3-200T-RT servo amplifier is described in this appendix. Sections within parentheses in the following sections indicate corresponding sections of the instruction manual.

App. 3.1 Parts identification (1.6.1 Parts identification)

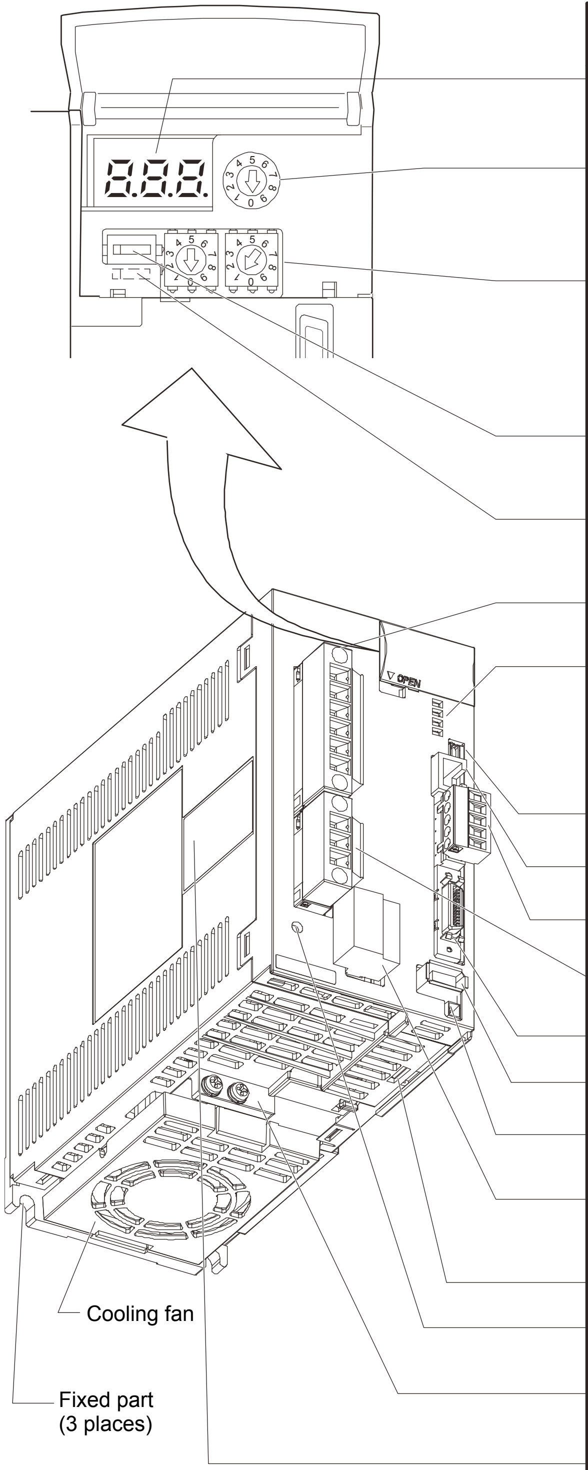

Name/Application	Detailed explanation
Display The 3-digit, seven-segment LED shows the servo status and alarm number.	Section 5.3 Chapter 11
Baud rate switch (MODE) Select the CC-Link communication baud rate.	Section 3.2.4
Station number switches (STATION NO.) Set the station number of the servo amplifier. Set the one place. Set the ten place.	Section 3.2.3
Occupied station count switch (SW1) Set the number of occupied stations.	Section 3.2.5
Switch for manufacturer setting (SW2) Do not change the default setting (left).	
Main circuit power supply connector (CNP1) Used to connect the input power supply.	Section 4.1 Section 4.3 Section 12.1
Communication alarm display section Indicates alarms in CC-Link communication. ■ L.RUN ■ SD ■ RD ■ L.ERR	Section 11.3
USB communication connector (CN5) Used to connect the personal computer.	Chapter 7
RS-422 communication connector (CN3) Used to connect the MR-PRU03 parameter unit or personal computer.	Chapter 7 Chapter 8 Chapter 15
CC-Link connector (CN1) Wire the CC-Link cable.	Section 3.2.2
Servo motor power output connector (CNP3) Used to connect the servo motor.	Section 4.1 Section 4.3 Section 12.1
I/O signal connector (CN6) Used to connect digital I/O signals.	Section 4.2 Section 4.4
Encoder connector (CN2) Used to connect the servo motor encoder.	Section 4.10 Section 14.1
Battery connector (CN4) Used to connect the battery for absolute position data backup.	Section 5.8 Section 14.7
Control circuit connector (CNP2) Used to connect the control circuit power supply/ regenerative option.	Section 4.1 Section 4.3 Section 12.1 Section 14.2
Battery holder Contains the battery for absolute position data backup.	Section 5.8
Charge lamp Lit to indicate that the main circuit is charged. While this lamp is lit, do not reconnect the cables.	
Protective earth (PE) terminal (⏚) Earth terminal	Section 4.1 Section 4.3 Section 12.1
Rating plate	Section 1.4

App. 3.2 Configuration including auxiliary equipment (1.7 Configuration including auxiliary equipment)

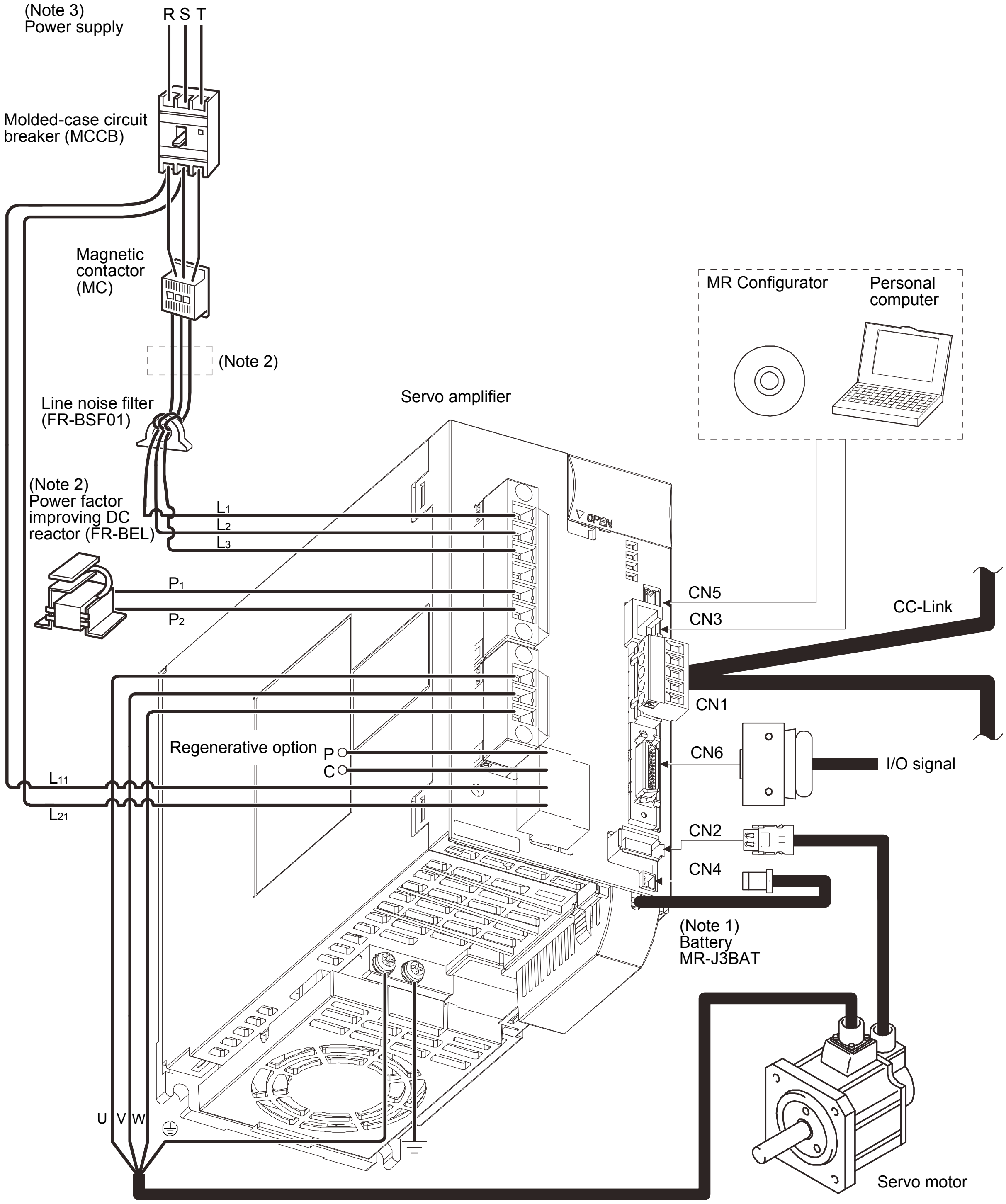

Note 1. The battery (option) is used for the absolute position detection system in the position control mode.

2. The power factor improving AC reactor can also be used. In this case, the power factor improving DC reactor cannot be used. When not using power factor improving DC reactor, short P1 and P2.

3. Refer to section 1.2 for the power supply specification.

App. 3.3 CNP1, CNP2, CNP3 wiring method (4.3.3 CNP1, CNP2, CNP3 wiring method)

(a) Servo amplifier power supply connectors

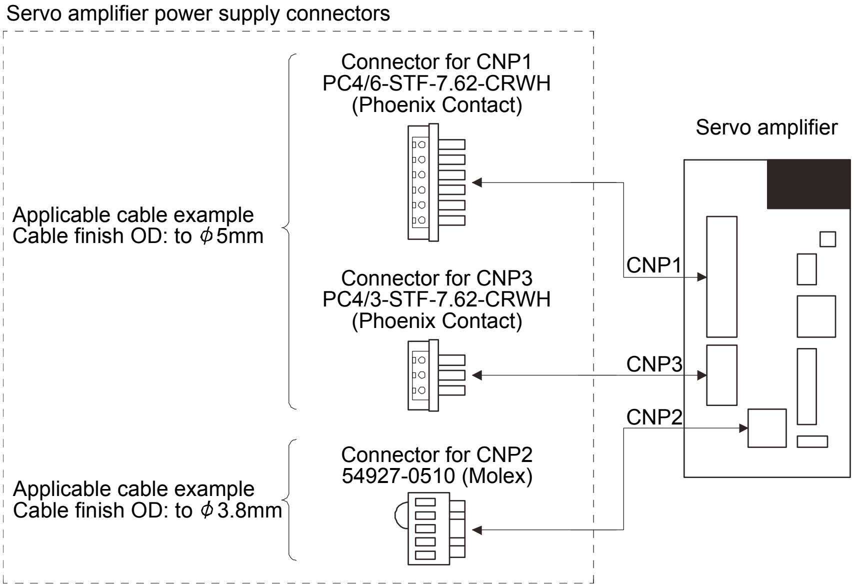

(b) Termination of the cables

1) CNP1・CNP3

Solid wire: After the insulator has been stripped, the cable can be used as it is.

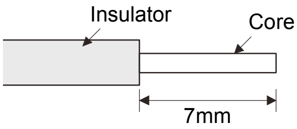

Twisted wire: Use the cable after stripping the insulator without twisting the core. At this time, take care to avoid a short caused by the loose wires of the core and the adjacent pole. Do not solder the core as it may cause a contact fault. Alternatively, a bar terminal may be used to put the wires together.

Cable size		Bar terminal type		Crimping tool	Manufacturer
[mm^2]	AWG	For 1 cable	For 2 cables		
1.25/1.5	16	AI1.5-8BK	AI-TWIN2×1.5-8BK	CRIMPFOX-ZA3	Phoenix Contact
2.0/2.5	14	AI2.5-8BU	AI-TWIN2×2.5-10BU		
3.5	12	AI4-10Y			

2) CNP2

CNP2 is the same as MR-J3-100T or smaller capacities. Refer to section 4.3.3 (1) (b).

App. 3.4 OUTLINE DRAWINGS (Chapter 12 OUTLINE DRAWINGS)

[Unit: mm]

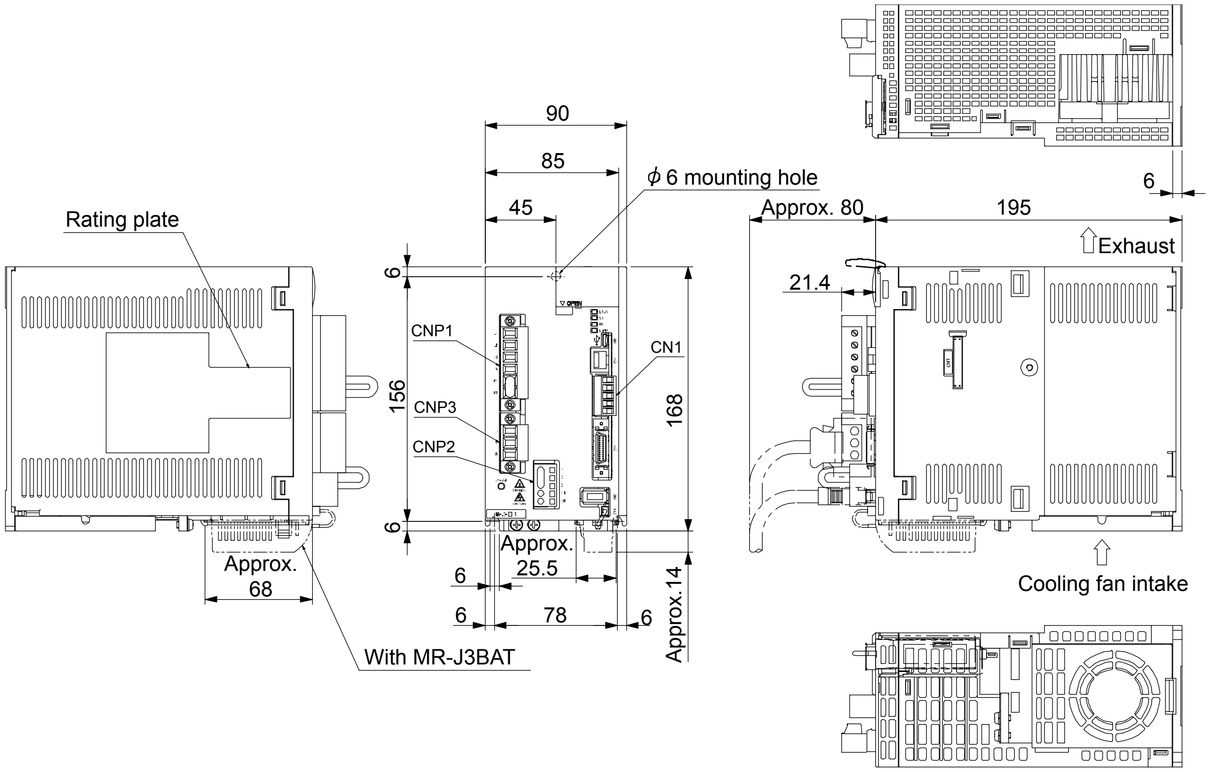

Mass: 2.3 [kg]

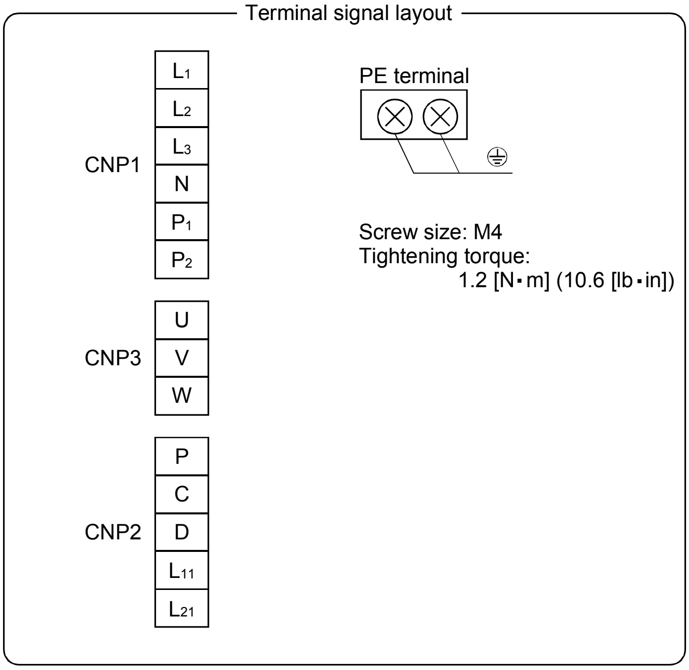

Screw size: M4
Tightening torque:
1.2 [N・m] (10.6 [lb・in])

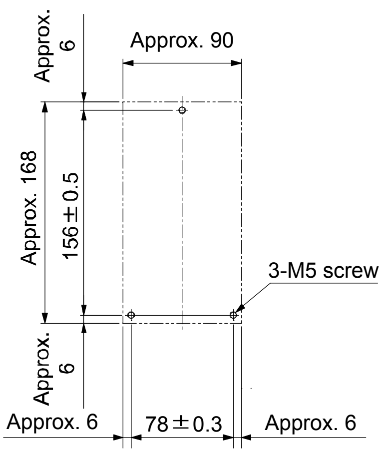

Mounting hole process drawing

Mounting screw
Screw size: M5
Tightening torque: 3.24[N・m] (28.7[lb・in])

App. 4 Selection example of servo motor power cable

POINT

- Selection condition of wire size is as follows.
  Wire length: 30m or less
- Depending on the cable selected, there may be cases that the cable does not fit into the option or recommended cable clamp. Select a cable clamp according to the cable diameter.

Selection example when using the 600V grade EP rubber insulated chloroprene sheath cab-tire cable (2PNCT) for servo motor power (U, V, and W) is indicated below.

Servo motor	Wire size [mm^2]
HF-SP52	1.25
HF-SP102	1.25
HF-SP152	2
HF-SP202	2
HF-SP352	3.5
HF-SP502	5.5
HF-SP702	8
HF-SP51	1.25
HF-SP81	1.25
HF-SP121	2
HF-SP201	2
HF-SP301	3.5
HF-SP421	5.5
HF-SP524	1.25
HF-SP1024	1.25
HF-SP1524	2
HF-SP2024	2
HF-SP3524	2
HF-SP5024	3.5
HF-SP7024	5.5
HC-RP103	2
HC-RP153	2
HC-RP203 (Note)	3.5
HC-RP353 (Note)	5.5
HC-RP503 (Note)	5.5
HC-LP52	1.25
HC-LP102	1.25
HC-LP152	2
HC-LP202	3.5
HC-LP302	5.5
HC-UP72	1.25
HC-UP152	2
HC-UP202	3.5
HC-UP352	5.5
HC-UP502	5.5
HA-LP601	8
HA-LP801	14
HA-LP12K1	14
HA-LP15K1	22
HA-LP20K1	38
HA-LP25K1	38
HA-LP30K1	38
HA-LP37K1	60
HA-LP701M	8
HA-LP11K1M	14
HA-LP15K1M	22
HA-LP22K1M	38
HA-LP30K1M	60
HA-LP37K1M	60
HA-LP502	5.5
HA-LP702	8
HA-LP11K2	14
HA-LP15K2	22
HA-LP22K2	22
HA-LP30K2	60
HA-LP37K2	60
HA-LP6014	5.5
HA-LP8014	5.5
HA-LP12K14	8
HA-LP15K14	14
HA-LP20K14	14
HA-LP25K14	22
HA-LP30K14	22
HA-LP37K14	22
HA-LP701M4	5.5
HA-LP11K1M4	8
HA-LP15K1M4	14
HA-LP22K1M4	14
HA-LP30K1M4	22
HA-LP37K1M4	22
HA-LP45K1M4	38
HA-LP50K1M4	38
HA-LP11K24	8
HA-LP15K24	14
HA-LP22K24	14
HA-LP30K24	22
HA-LP37K24	22
HA-LP45K24	38
HA-LP55K24	38
HF-JP53	1.25
HF-JP73	1.25
HF-JP103	2
HF-JP153	2
HF-JP203	2
HF-JP353	3.5
HF-JP503	5.5
HF-JP703	8
HF-JP903	14
HF-JP11K1M	22
HF-JP15K1M	30
HF-JP534	1.25
HF-JP734	2
HF-JP1034	2
HF-JP1534	2
HF-JP2034	2
HF-JP3534	5.5
HF-JP5034	5.5
HF-JP7034	8
HF-JP9034	8
HF-JP11K1M4	8
HF-JP15K1M4	22

Note. Use a composite cable and others when combining with wiring of the electromagnetic brake power in the same cable.

App. 5 Program example with MELSEC-A series programmable controllers (point table positioning operation)

App. 5.1 Function-by-function programming examples

This section explains specific programming examples for servo operation, monitor, parameter read and write, and others on the basis of the equipment makeup shown in appendix 7.1.1.

App.5.1.1 System configuration example

As shown below, the CC-Link system master・local unit is loaded to run two servo amplifiers (1 station occupied / 2 stations occupied).

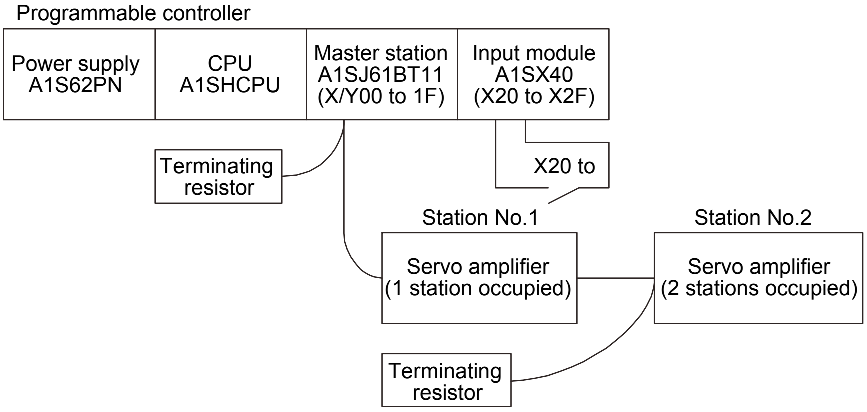

App. 5.1.2 Reading the servo amplifier status

Read the servo amplifier status from the master station buffer memory. The servo amplifier status is always stored in the remote input RX (addresses E0H to 15FH) Read the servo amplifier status of station 1 to M0 to M31.

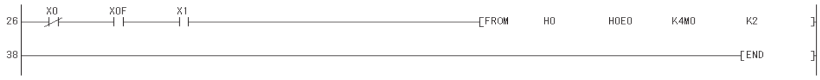

Reads remote input (RX00 to RX1F) of buffer memory to M0 to M31.

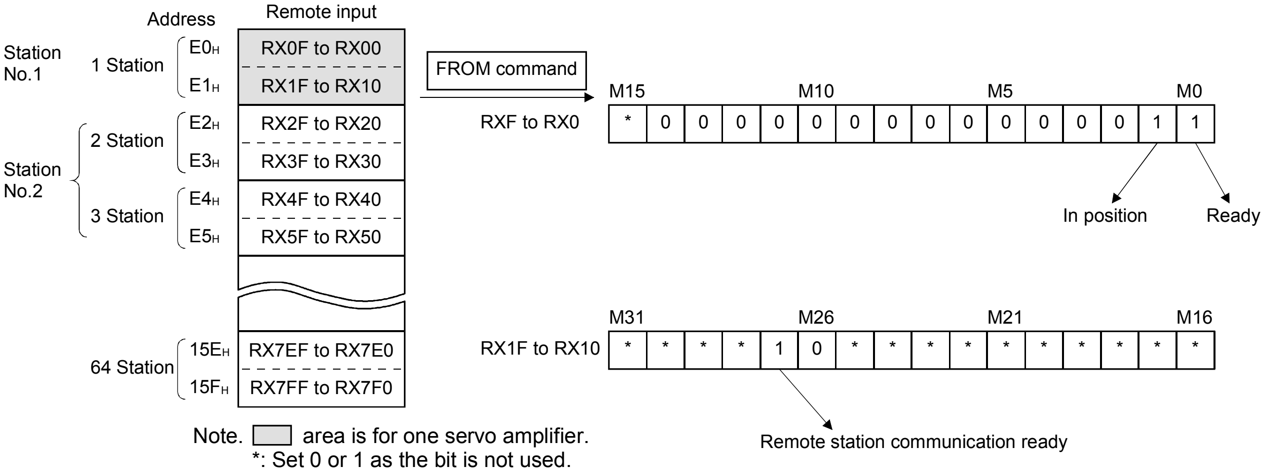

Note. ▢ area is for one servo amplifier.
*: Set 0 or 1 as the bit is not used.

Servo amplifier status (1 station occupied)

M0: Ready (RD)
M1: In position (INP)
M2: Rough match (CPO)
M3: Home position return completion (ZP)
M4: Limiting torque (TLC)
M5: ———
M6: Electromagnetic brake interlock (MBR)
M7: Temporary stop (PUS)
M8: Monitoring (MOF)
M9: Instruction code execution completion (COF)
M10: Warning (WNG)
M11: Battery warning (BWNG)
M12: Movement completion (MEND)
M13: Dynamic brake interlock (DB)
M14: Position range (POT)
M15: ———
M16: ———
M17: ———
M18: ———
M19: ———
M20: ———
M21: ———
M22: ———
M23: ———
M24: ———
M25: ———
M26: Malfunction (ALM)
M27: Remote station communication ready (CRD)
M28: ———
M29: ———
M30: ———
M31: ———

App. 5.1.3 Writing the operation commands

To operate the servo amplifier, write the operation commands to the remote output RY (addresses 160H to 1DFH). Perform positioning operation of point table No.2 for the servo amplifier of station 2.
Start the operation by turning on X20.

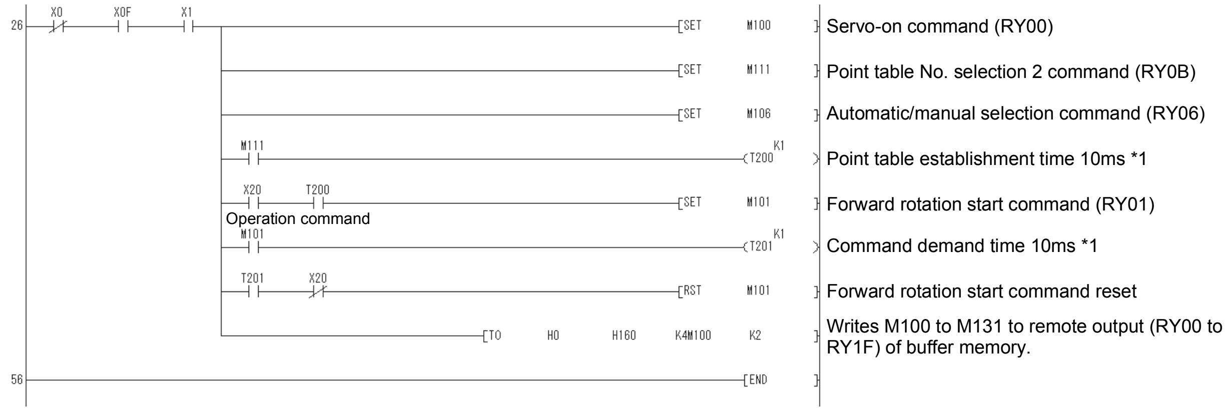

*1: Setting time for the timer should be larger than the command processing time or twice the link scan time whichever larger. When the setting time is short, the command cannot be received properly.

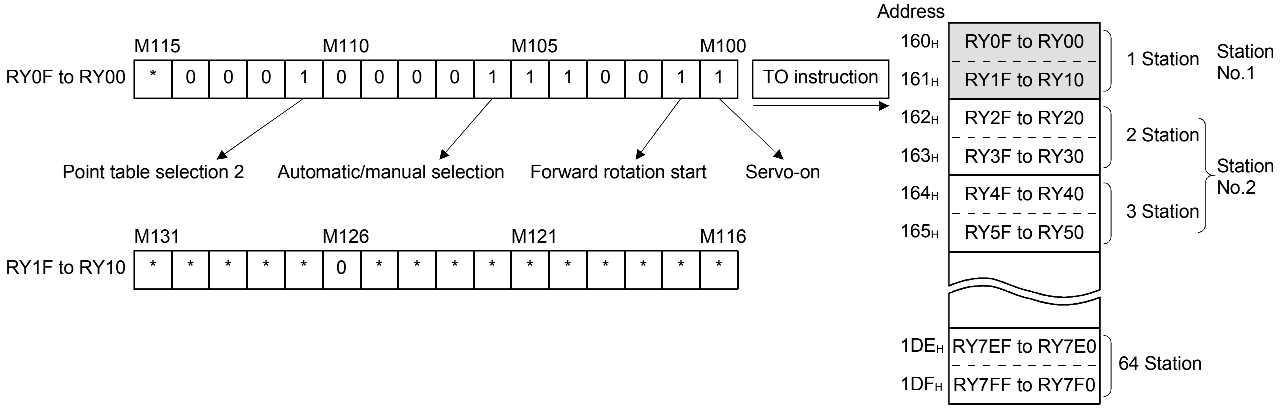

Note. ▨ area is for one servo amplifier.
*: Set 0 as the bit is not used.

Operation commands (1 station occupied)

M100: Servo-on (SON)
M101: Forward rotation start (ST1)
M102: Reverse rotation start (ST2)
M103: Proximity dog (DOG)
M104: Forward rotation stroke end (LSP)
M105: Reverse rotation stroke end (LSN)
M106: Automatic/manual selection (MDO)
M107: Temporary stop/Restart (TSTP)
M108: Monitor output execution demand (MOR)
M109: Instruction code execution demand (COR)
M110: Point table No. selection 1 (DI0)
M111: Point table No. selection 2 (DI1)
M112: Point table No. selection 3 (DI2)
M113: Point table No. selection 4 (DI3)
M114: Point table No. selection 5 (DI4)
M115: Clear (CR)
M116: ———
M117: ———
M118: ———
M119: ———
M120: ———
M121: ———
M122: ———
M123: ———
M124: ———
M125: ———
M126: Reset (RES)
M127: ———
M128: ———
M129: ———
M130: ———
M131: ———

App. 5.1.4 Reading the data

Read various data of the servo amplifier.

(1) Reading the monitor value

Read the (feedback pulse value) of the servo amplifier of station 2 to D1.

Data No.	Description
H000A	Cumulative feedback pulse data (hexadecimal)

Read the cumulative feedback pulse monitor by turning on X20.

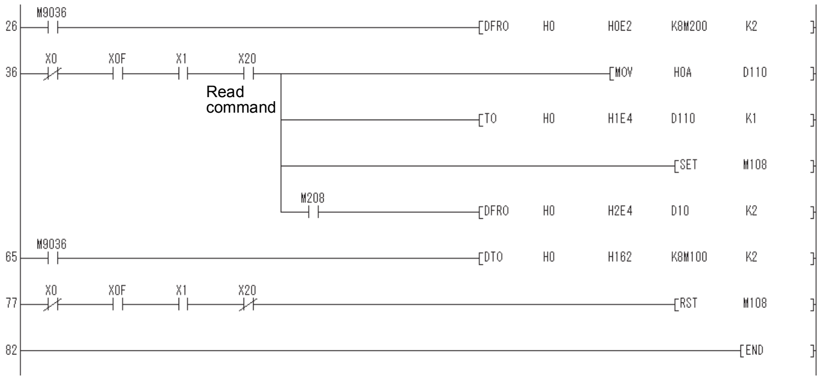

Reads remote input (RX20 to RX5F) of buffer memory to M200 to M263.

Sets monitor code (H000A) of feedback pulse in RWw4.

Turns on Monitor output execution demand (RY28).

Reads RWr4 and RWr5 of buffer memory to D10 and D11 when monitoring (RX28) turns on.

Writes M100 to M163 to remote output (RY20 to RY5F) of buffer memory.

Monitor stop

(2) Reading the parameter

Read parameter No.PA04 "Function selection A-1" of the servo amplifier of station 2 to D1.

Data No.	Description
H8200	Parameter group selection
H2024	Parameter No.PA04 setting (hexadecimal)

Read the parameter No.PA04 by turning on X20.

The respond code at instruction code execution is set to D9.

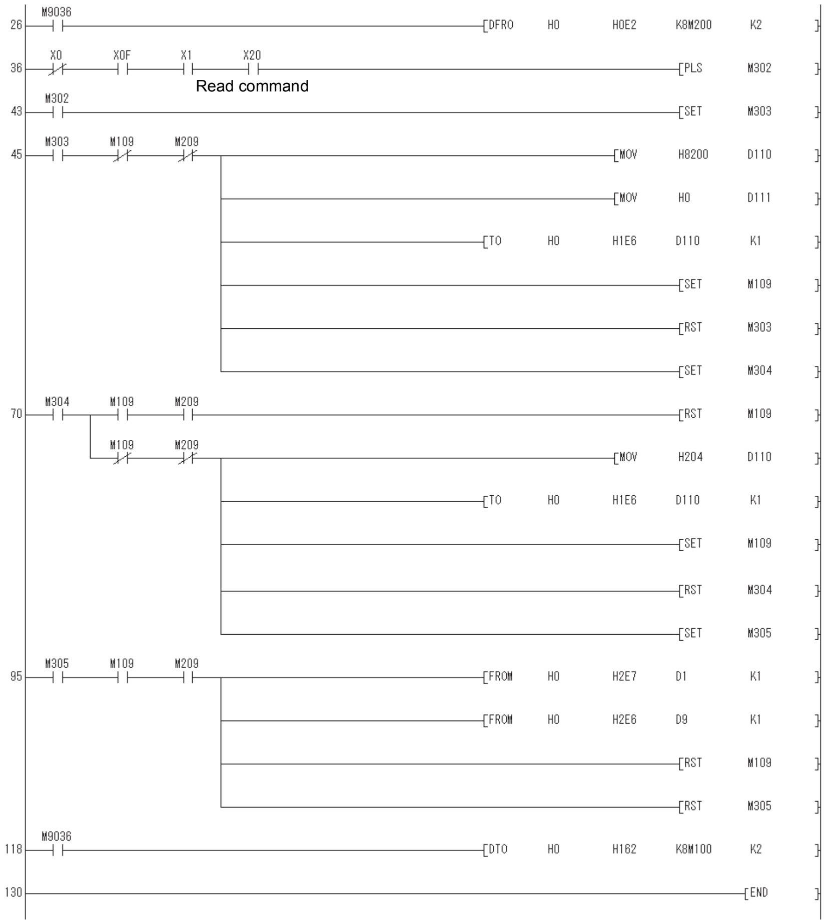

Reads remote input (RX20 to RX5F) of buffer memory to M200 to M263.

Writes parameter group No. write (H8200) to RWw6 and parameter group PA (H0000) to RWw7.

Turns on instruction code execution demand (RY29).

Turns off instruction code execution demand (RY29) when instruction code execution completion (RX29) turns on.

Writes parameter No.PA04 read (H0204) to RWw6.

Turns on instruction code execution demand (RY29).

Reads RWr7 and RWr6 of buffer memory to D1 and D9 when instruction code execution completion (RX29) turns on.

Turns off instruction code execution demand (RY29).

Writes M100 to M163 to remote output (RY20 to RY5F) of buffer memory.

(3) Reading the alarm definition

Read the alarm definition of the servo amplifier of station 2 to D1.

Data No.	Description
H0010	Occurring alarm/warning No. (hexadecimal)

Read current alarms by turning on X20.

The respond code at instruction code execution is set to D9.

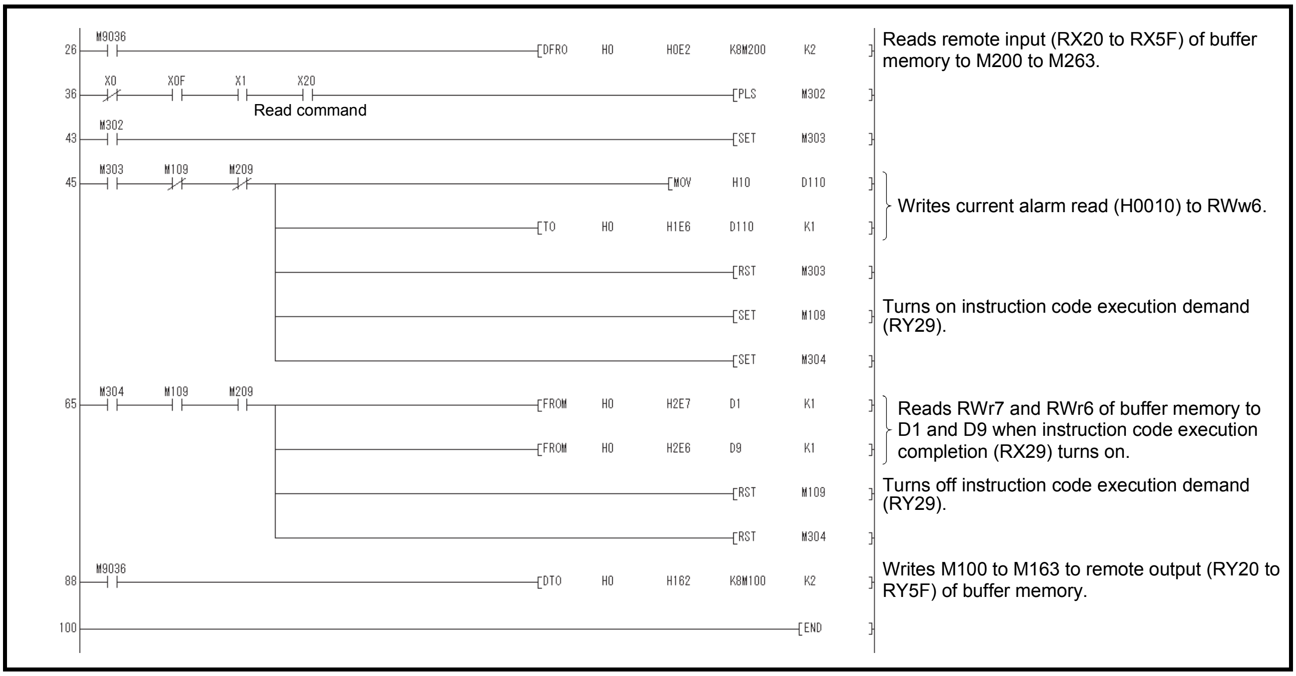

Reads remote input (RX20 to RX5F) of buffer memory to M200 to M263.

Writes current alarm read (H0010) to RWw6.

Turns on instruction code execution demand (RY29).

Reads RWr7 and RWr6 of buffer memory to D1 and D9 when instruction code execution completion (RX29) turns on.

Turns off instruction code execution demand (RY29).

Writes M100 to M163 to remote output (RY20 to RY5F) of buffer memory.

App. 5.1.5 Writing the data

This section explains the programs for writing various data to the servo amplifier.

(1) Writing the servo motor speed data of point table

Change the servo motor speed data in the point table No.1 of the servo amplifier of station 2 to "100".

The following shows a program example for writing data to the servo amplifier when two stations are occupied. Writing is disabled for the servo amplifier when one station is occupied.

Code No.	Description
H8D01	Write of servo motor speed data of point table No.1 (hexadecimal)

Set data	Description
K100	Servo motor speed data of point table No.1 (decimal)

Write the data to the servo motor speed data of point table No.1 by turning on X20.

The respond code at instruction code execution is set to D2.

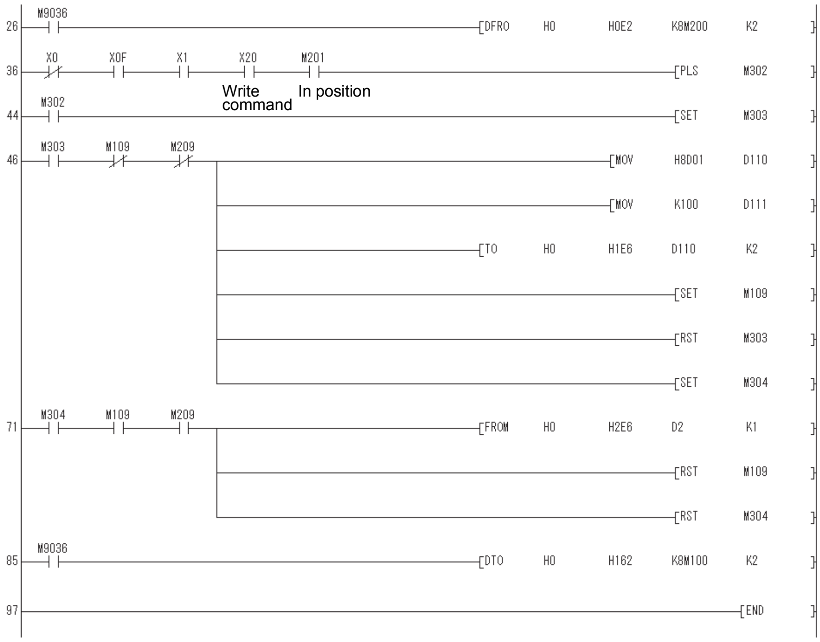

Reads remote input (RX20 to RX5F) of buffer memory to M200 to M263.

Writes speed data (H8D01) of point table No.1 to RWw6, and speed data (K100) to RWw7.

Turns on instruction code execution demand (RY29).

Reads respond code (RWr6) to D2 when instruction code execution completion (RX29) turns on.

Turns off instruction code execution demand (RY29).

Writes M100 to M163 to remote output (RY20 to RY5F) of buffer memory.

(2) Writing the parameter

The following shows a program example when two stations are occupied.

Change parameter No.PC12 (JOG speed) of the servo amplifier of station 2 to "100".

The parameter group PC is specified as follows.

Code No.	Description
8200h	Parameter group selection

Set data	Description
H0002	Set data (hexadecimal)

The parameter No.12 is changed to "100" as follows.

Code No.	Description
H820C	Parameter No.PC12 write (hexadecimal)

Set data	Description
K100	Set data (decimal)

Write the data to the parameter No.PC12 by turning on X20.

The respond code at instruction code execution is set to D2.

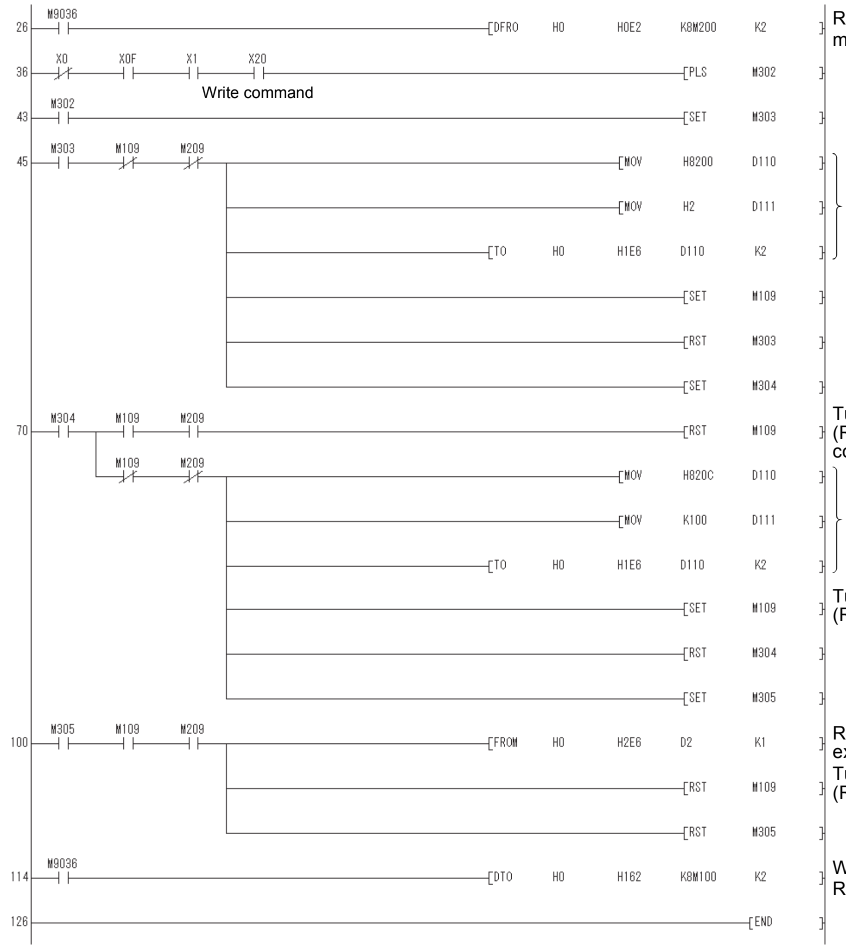

Reads remote input (RX20 to RX5F) of buffer memory to M200 to M263.

Writes parameter group No. write (H8200) to RWw6 and parameter group PC (H0002) to RWw7.

Turns on instruction code execution demand (RY29).

Turns off instruction code execution demand (RY29) when instruction code execution completion (RX29) turns on.

Writes parameter No.PC12 write (H820C) to RWw6 and data (K100) to RWw7.

Turns on instruction code execution demand (RY29).

Reads RWw6 to D2 when instruction code execution completion (RX29) turns on.

Turns on instruction code execution demand (RY29).

Writes M100 to M163 to remote output (RY20 to RY5F) of buffer memory.

(3) Servo amplifier alarm resetting program examples

(a) Deactivate the alarm of the servo amplifier of station 2 by issuing a command from the programmable controller.

Reset the servo amplifier on the occurrence of a servo alarm by turning on X20.

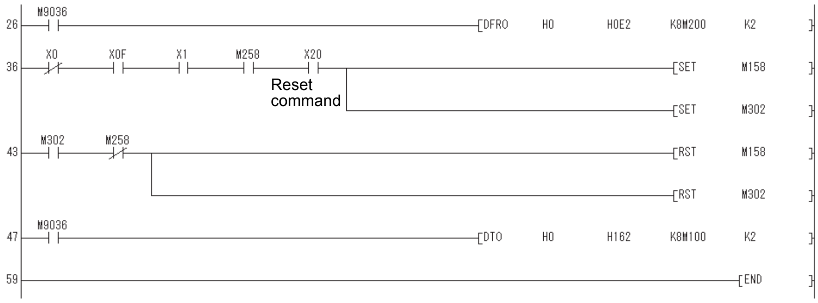

Reads remote input (RX20 to RX5F) of buffer memory to M200 to M263.

Turns on reset command (RY5A).

Turns off reset command (RY5A) when trouble flag (RX5A) turns off.

Writes M100 to M163 to remote output (RY20 to RY5F) of buffer memory.

(b) Deactivate the alarm of the servo amplifier of station 2 using the instruction code.

Code No.	Description
H8010	Alarm reset command (hexadecimal)

Set data	Description
H1EA5	Execution data (hexadecimal)

Reset the servo amplifier by turning on X20.

The respond code at instruction code execution is set to D2.

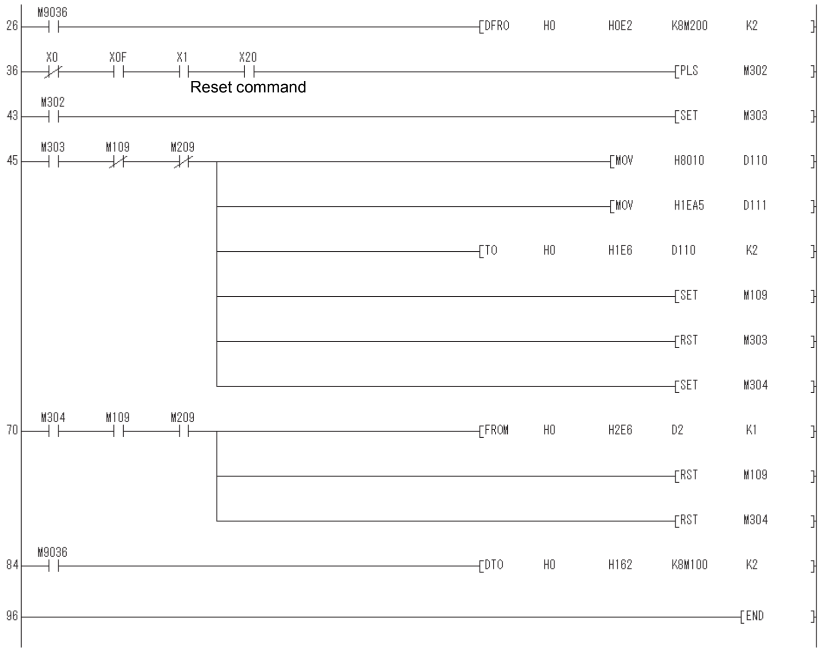

Reads remote input (RX20 to RX5F) of buffer memory to M200 to M263.

Writes alarm reset command (H8010) to RWw6 and execution data (H1EA5) to RWw7.

Turns on instruction code execution demand (RY29).

Reads respond code (RWr6) to D2 when instruction code execution completion (RX29) turns on.

Turns off instruction code execution demand (RY29).

Writes M100 to M163 to remote output (RY20 to RY5F) of buffer memory.

App. 5.1.6 Operation

This section explains the operation programs of the servo amplifier.

(1) JOG operation

Perform JOG operation of the servo amplifier of station 1 and read the "current position" data.

Code No.	Description
H0001	Lower 16-bit data of current position (hexadecimal)
H0002	Upper 16-bit data of current position (hexadecimal)

Start the forward rotation JOG operation by turning on X22.

Start the reverse rotation JOG operation by turning on X23.

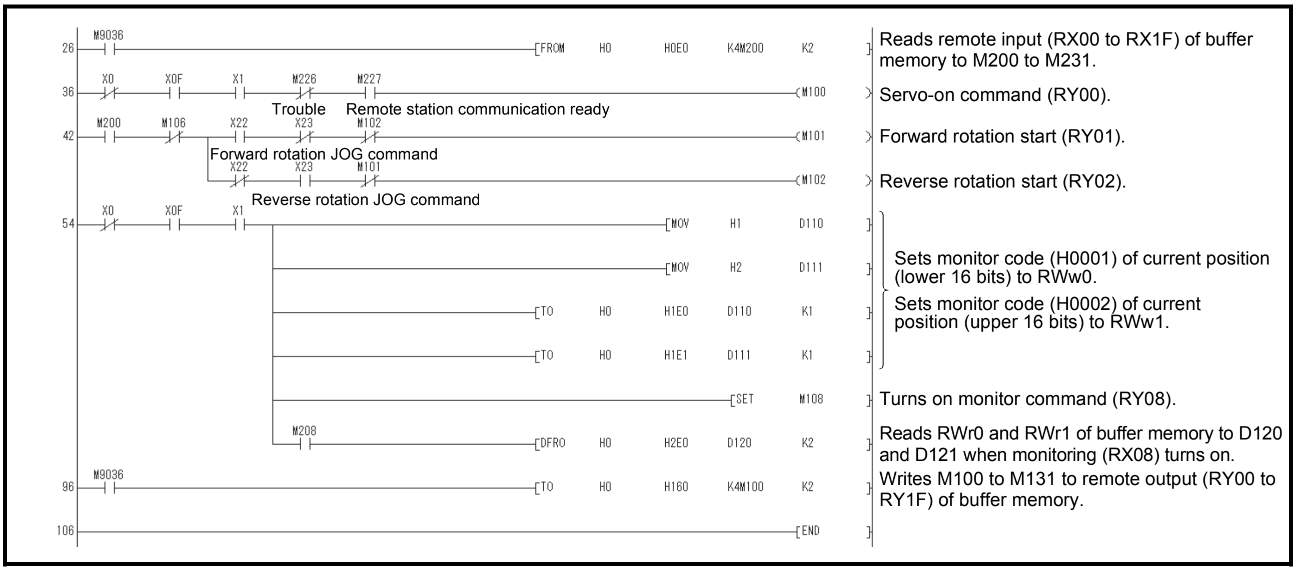

Reads remote input (RX00 to RX1F) of buffer memory to M200 to M231.

Servo-on command (RY00).

Forward rotation start (RY01).

Reverse rotation start (RY02).

Sets monitor code (H0001) of current position (lower 16 bits) to RWw0.

Sets monitor code (H0002) of current position (upper 16 bits) to RWw1.

Turns on monitor command (RY08).

Reads RWr0 and RWr1 of buffer memory to D120 and D121 when monitoring (RX08) turns on.

Writes M100 to M131 to remote output (RY00 to RY1F) of buffer memory.

(2) Remote register-based position data/speed data setting

The following program example is only applicable when two stations are occupied.

Operate the servo amplifier of station 2 after specifying the position data as "100000" and the speed data as "1000" in the direct specification mode.

Preset "□□□2" in parameter No.PC30.

Set data	Description
K100000	Position command data (decimal)
K1000	Speed command data (decimal)

Execute positioning operation with position and speed settings specified in the remote register by turning on X20.

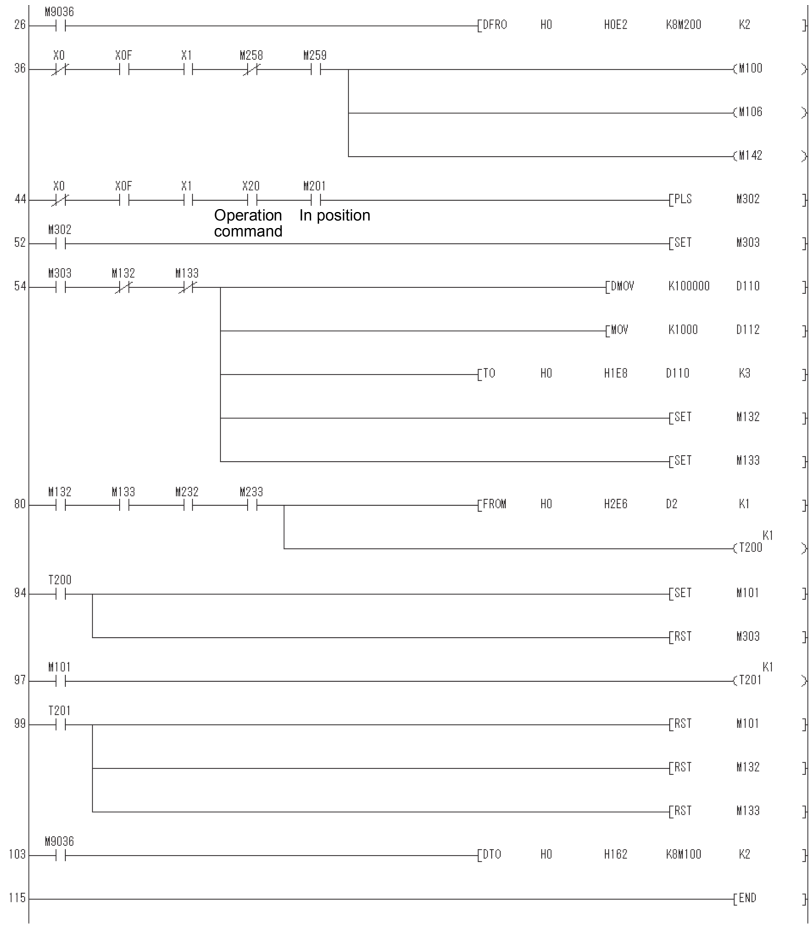

Reads remote input (RX20 to RX5F) of buffer memory to M200 to M263.

Servo-on command (RY20)

Automatic operation mode selection (RY26)

Position/speed specifying system selection (RY4A)

Writes position command data (K100000) to RWw8, RWw9, and speed data (K1000) to RWwA.

Turns on position command demand (RY40).

Turns on speed command demand (RY41).

Reads respond code (RWr6) to D2 when Position command execution completion (RX40) and Speed command execution completion (RX41) turn on.

Position and speed data establishment time 10ms *1

Turns on forward rotation start command (RY21).

Command request time 10ms *1

Turns off forward rotation start command (RY21).

Turns off position command demand (RY40).

Turns off speed command demand (RY41).

Writes M100 to M163 to remote output (RY20 to RY5F) of buffer memory.

*1: Setting time for the timer should be larger than the command processing time or twice the link scan time whichever larger. When the setting time is short, the command cannot be received properly.

(3) Remote register-based point table No. setting (incremental value command system)

The following program example is only applicable when two stations are occupied.

Operate the servo amplifier of station 2 with incremental values after specifying the point table No.5 in the direct specification mode.

Preset "□□□0" in parameter No.PA01 and "□□□0" in parameter No.PC30.

Set data	Description
K5	Point table No. (decimal)

Execute positioning operation to the point table No.5 by turning on X20.

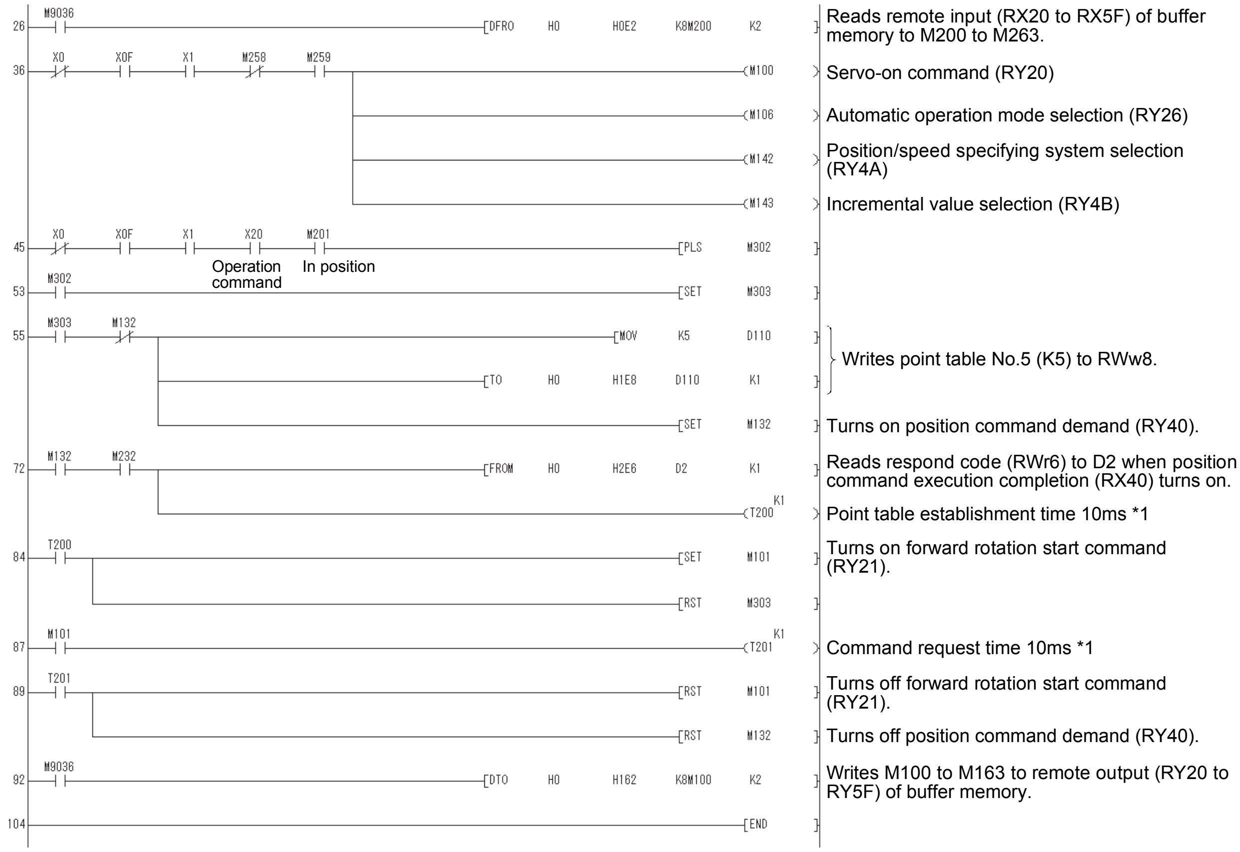

*1: Setting time for the timer should be larger than the command processing time or twice the link scan time whichever larger. When the setting time is short, the command cannot be received properly.

App. 5.2 Continuous operation program example

This section shows a program example which includes a series of CC-Link communication operations from a servo start. The program will be described on the basis of the equipment makeup shown in appendix 7.2.1, appendix 7.2.3.

App. 5.2.1 System configuration example when 1 station is occupied

As shown below, the CC-Link system master・local unit is loaded to run one servo amplifier (1 station occupied).

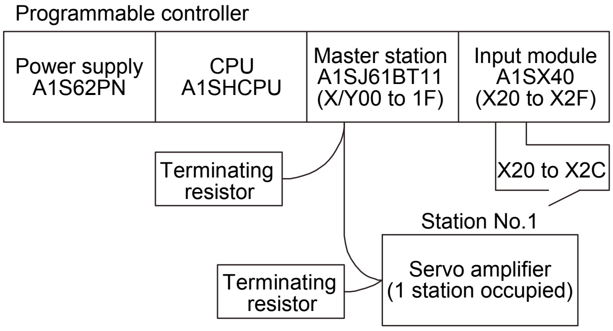

Input signal assignment

Input signal	Signal name	Description when the input is on
X20	Reset command	Resets the servo amplifier on an occurrence of a servo alarm.
X21	Servo-on command	Switches on the servo-on.
X22	Forward rotation JOG command	Executes a forward JOG operation in the manual operation mode.
X23	Reverse rotation JOG command	Executes a reverse JOG operation in the manual operation mode.
X24	Automatic/manual selection	OFF: Manual operation mode ON: Automatic operation mode
X25	Home position return command	Executes a dog type home position return when home position return is incomplete in the automatic operation mode.
X26	Proximity dog command	OFF: Proximity dog is on. (Note) ON: Proximity dog is off.
X27	Positioning start command	Executes a positioning operation to the point table number specified by X28 to X2C when home position return is incomplete in the automatic operation mode.
X28	No. selection 1	Specifies the position for the point table No. selection 1
X29	No. selection 2	Specifies the position for the point table No. selection 2
X2A	No. selection 3	Specifies the position for the point table No. selection 3
X2B	No. selection 4	Specifies the position for the point table No. selection 4
X2C	No. selection 5	Specifies the position for the point table No. selection 5

Note. This is when the parameter No.PD16 is set to "□□□0 (initial value)" (detects the dog at off).

App. 5.2.2 Program example when 1 station is occupied

POINT

- To execute a dog type home position return with the CC-Link communication functions, set "□0□□" in parameter No.PD14 and use Proximity dog (DOG) with the RY03 in this example.

Operate the servo amplifier of station 1 in the positioning mode and read the "current position" data.

Operation: Alarm reset, dog type home position return, JOG operation, automatic operation under point table command

Code No.	Description
H0001	Lower 16-bit data of current position (hexadecimal)
H0002	Upper 16-bit data of current position (hexadecimal)

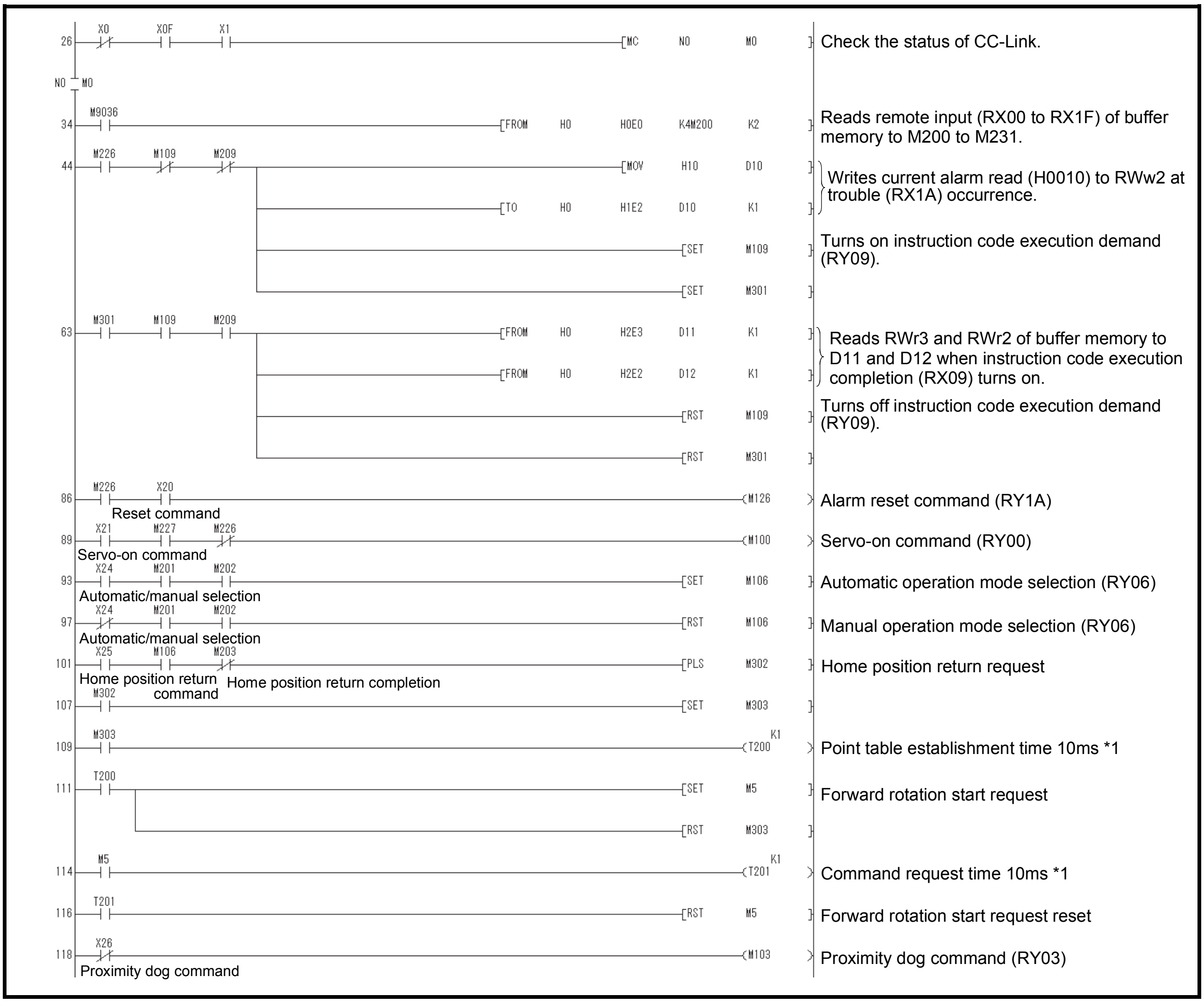

Check the status of CC-Link.

Reads remote input (RX00 to RX1F) of buffer memory to M200 to M231.

Writes current alarm read (H0010) to RWw2 at trouble (RX1A) occurrence.

Turns on instruction code execution demand (RY09).

Reads RWr3 and RWr2 of buffer memory to D11 and D12 when instruction code execution completion (RX09) turns on.

Turns off instruction code execution demand (RY09).

Alarm reset command (RY1A)

Servo-on command (RY00)

Automatic operation mode selection (RY06)

Manual operation mode selection (RY06)

Home position return request

Point table establishment time 10ms *1

Forward rotation start request

Command request time 10ms *1

Forward rotation start request reset

Proximity dog command (RY03)

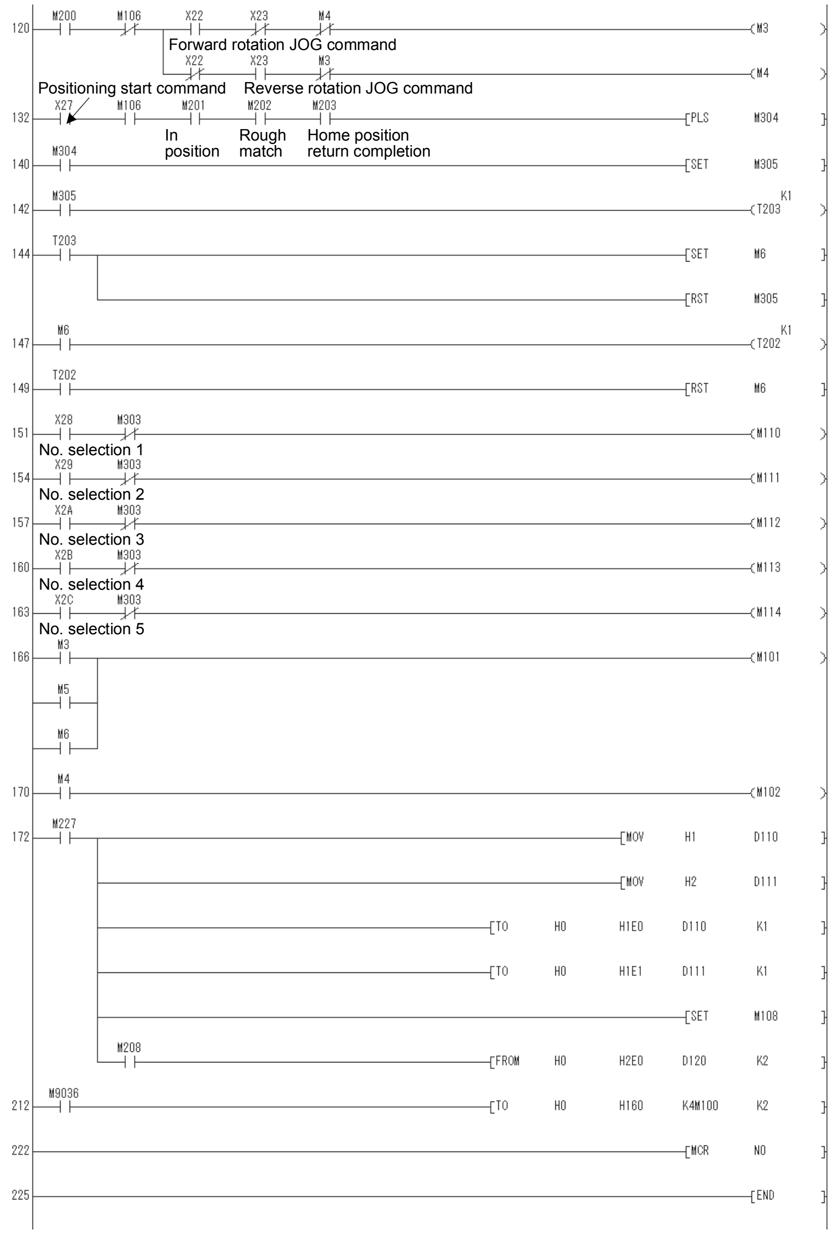

Forward rotation start request

Reverse rotation start request

Positioning start command

Point table establishment time 10ms *1

Forward rotation start request

Command request time 10ms *1

Forward rotation start request reset

Point table No. selection 1 (RY0A)

Point table No. selection 2 (RY0B)

Point table No. selection 3 (RY0C)

Point table No. selection 4 (RY0D)

Point table No. selection 5 (RY0E)

Forward rotation start (RY01)

Reverse rotation start (RY02)

Sets monitor code (H0001) of current position (lower 16 bits) in RWw0.

Sets monitor code (H0002) of current position (upper 16 bits) in RWw1.

Turns on monitor output execution demand (RY08).

Reads RWr0 and RWr1 of buffer memory to D120 and D121 when monitoring (RX08) turns on.

Writes M100 to M131 to remote output (RY00 to RY2F) of buffer memory.

*1: Setting time for the timer should be larger than the command processing time or twice the link scan time whichever larger. When the setting time is short, the command cannot be received properly.

App. 5.2.3 System configuration example when 2 stations are occupied

As shown below, the CC-Link system master・local unit is loaded to run one servo amplifiers (2 stations occupied).

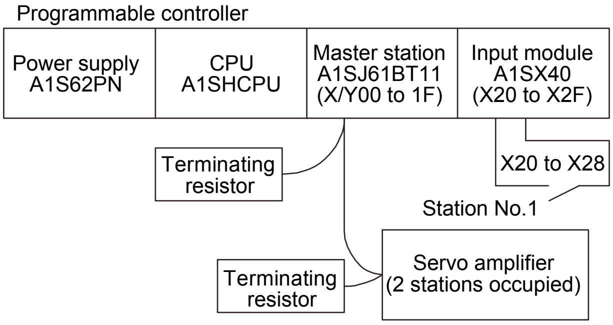

Input signal assignment

Input signal	Signal name	Description when the input is on
X20	Reset command	Resets the servo amplifier on an occurrence of a servo alarm.
X21	Servo-on command	Switches on the servo-on.
X22	Forward rotation JOG command	Executes a forward JOG operation in the manual operation mode.
X23	Reverse rotation JOG command	Executes a reverse JOG operation in the manual operation mode.
X24	Automatic/manual selection	OFF: Manual operation mode ON: Automatic operation mode
X25	Home position return command	Executes a dog type home position return when home position return is incomplete in the automatic operation mode.
X26	Proximity dog command	OFF: Proximity dog is on. (Note) ON: Proximity dog is off.
X27	Positioning start command	Executes a positioning operation with position and speed settings specified in the remote register when home position return is completed in the automatic operation mode.
X28	Position/speed setting system changing command	Changes to position/speed specification by the remote register.

Note. This is when the parameter No.PD16 is set to "□□□0 (initial value)" (detects the dog at off).

App. 5.2.4 Program example when 2 stations are occupied

POINT

- To execute a dog type home position return with the CC-Link communication functions, set "□0□□" in parameter No.PD14 and use Proximity dog (DOG) with the RY03 in this example.

Operate the servo amplifier of station 1 in the positioning mode and read the "motor speed" data.
Preset the parameter No.PC30 to "□□□2".
Operation: Alarm reset, dog type home position return, JOG operation, automatic operation under point table command

Code No.	Description
H0016	32-bit data of motor speed (hexadecimal)

Code No.	Description
K50000	Position command data (decimal)
K100	Speed command data (decimal)

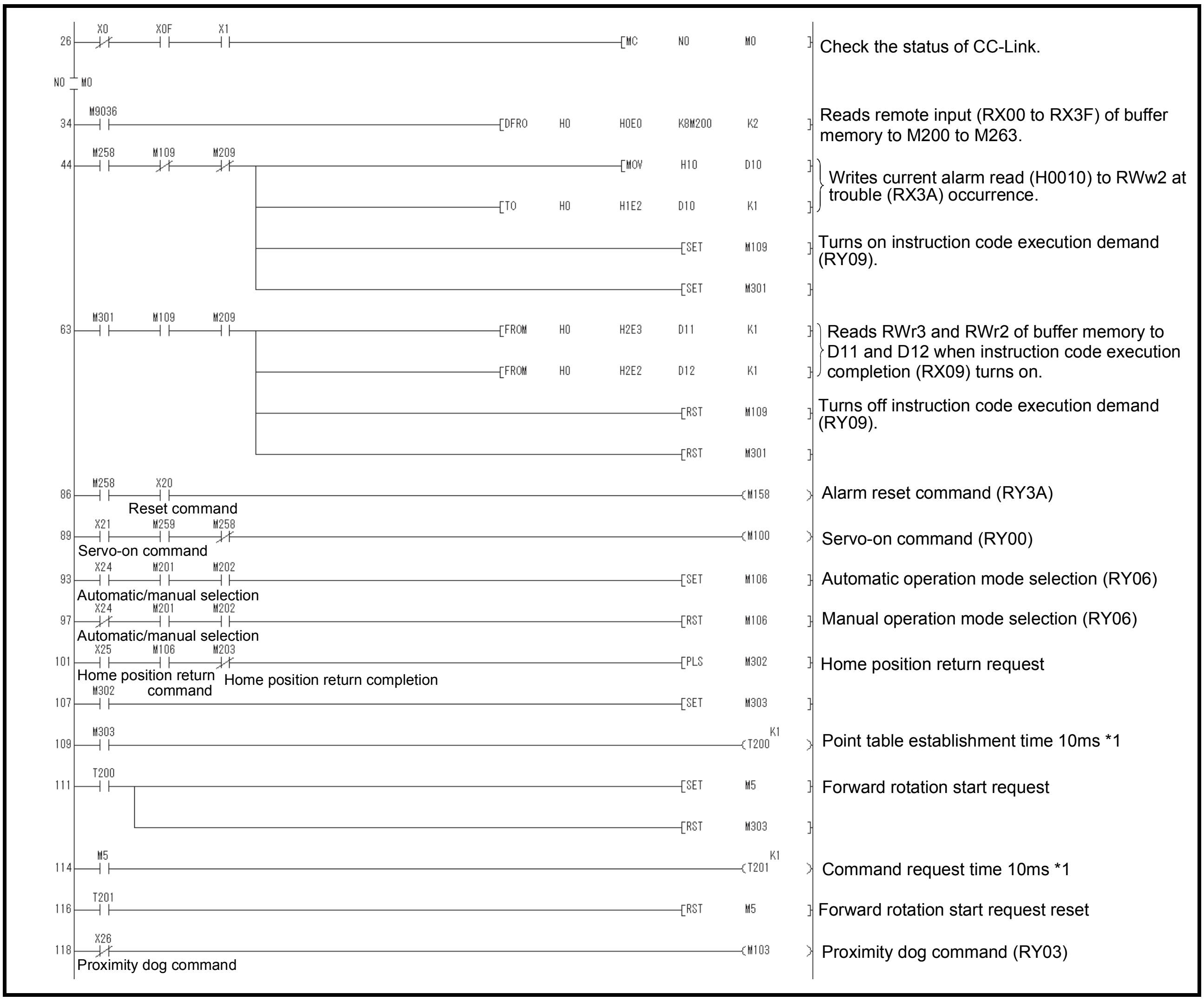

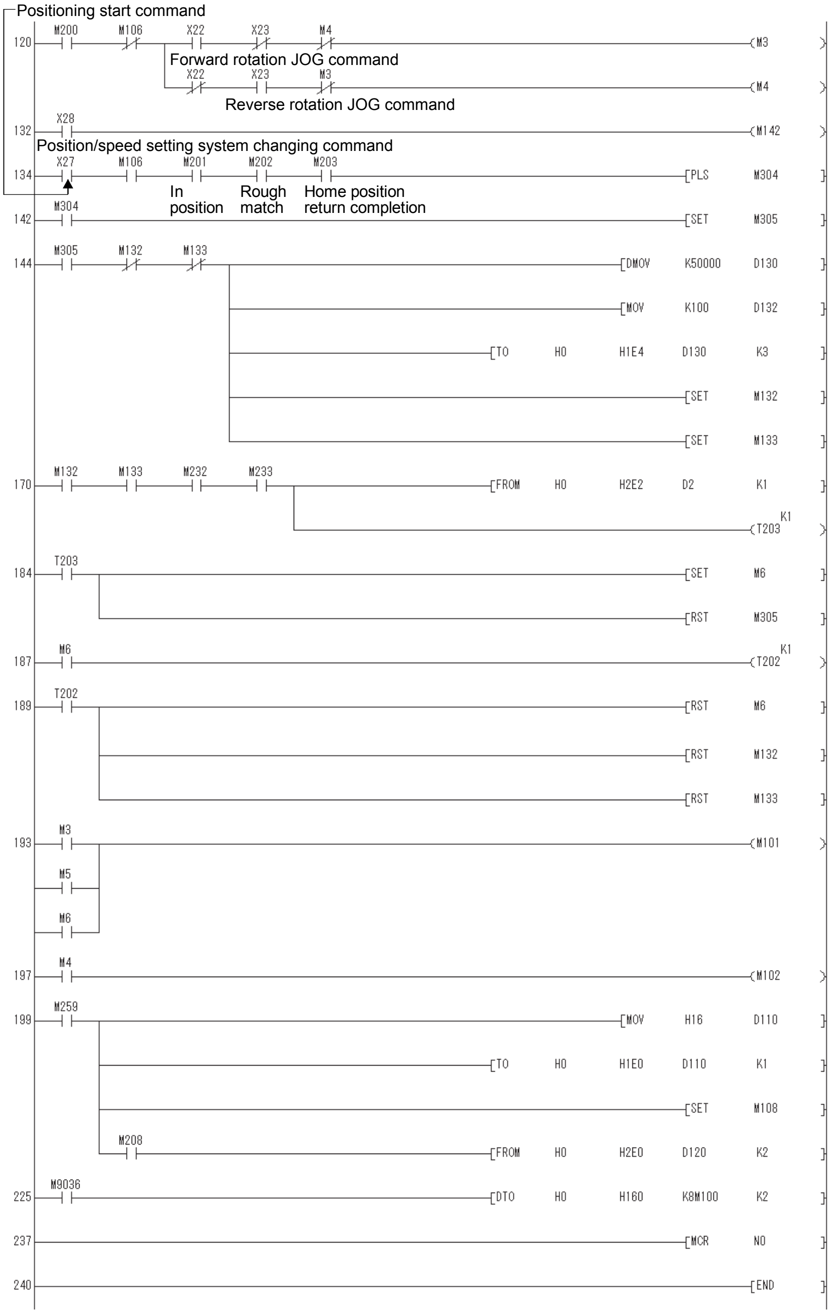

Forward rotation start request

Reverse rotation start request

Position/speed specifying system selection (RY4A)

Writes position command data (K50000) to RWw4, RWw5, and speed data (K100) to RWw6.

Turns on position command demand (RY20).

Turns on speed command demand (RY21).

Reads respond code (RWr2) to D2 when Position command execution completion (RX20) and Speed command execution completion (RX21) turn on.

Position and speed data establishment time 10ms *1

Positioning start command

Command request time 10ms *1

Positioning start command reset

Turns off position command demand (RY20).

Turns off speed command demand (RY21).

Forward rotation start (RY01)

Reverse rotation start (RY02)

Sets monitor code (H0016) of motor speed to RWw0.

Turns on monitor output execution demand (RY08).

Reads RWr0 and RWr1 of buffer memory to D120 and D121 when monitoring (RX08) turns on.

Writes M100 to M163 to remote output (RY00 to RY3F) of buffer memory.

*1 Setting time for the timer should be larger than the command processing time or twice the link scan time whichever larger. When the setting time is short, the command cannot be received properly.

App. 6 Handling of AC servo amplifier batteries for the United Nations Recommendations on the Transport of Dangerous Goods

United Nations Recommendations on the Transport of Dangerous Goods Rev. 15 (hereinafter Recommendations of the United Nations) has been issued. To reflect this, transport regulations for lithium metal batteries are partially revised in the Technical Instruction (ICAO-TI) by the International Civil Aviation Organization (ICAO) and the International Maritime Dangerous Goods Code (IMDG Code) by the International Maritime Organization (IMO).
To comply the instruction and code, we have modified the indication on the package for general-purpose AC servo batteries.
The above change will not affect the function and performance of the product.

(1) Target model

Battery (cell) : MR-J3BAT, MR-BAT, A6BAT
Battery unit (assembled) : MR-J2M-BT

(2) Purpose

Safer transportation of lithium metal batteries.

(3) Change in regulations

The following points are changed for lithium metal batteries in transportation by sea or air based on the revision of Recommendations of the United Nations Rev. 15 and ICAO-TI 2009-2010 edition, and IATA Dangerous Goods Regulations 54th Edition (effective January 1, 2013). For lithium metal batteries, cells are classified as UN3090, and batteries contained in or packed with equipment are classified as UN3091.

(a) Transportation of lithium metal batteries alone

Packaging requirement	Classification	Main requirement
Less than eight cells per package with less than one gram of lithium content	UN3090 PI968 Section II	The package must pass a 1.2 m drop test, and the handling label with battery illustration (size: 120 × 110 mm) must be attached on the package.
Less than two assembled batteries per package with less than two grams of lithium content		
More than eight cells per package with less than one gram of lithium content	UN3090 PI968 Section IB	The package must pass a 1.2 m drop test, and the handling label with battery illustration (size: 120 × 110 mm) must be attached on the package. The Class 9 hazard label must be attached or others to comply with dangerous goods (Class 9).
More than two assembled batteries per package with less than two grams of lithium content		
Cells with more than one gram of lithium content	UN3090 PI968 Section IA	The package must be compliant with Class 9 Packages, and the Class 9 hazard label must be attached or others to comply with dangerous goods (Class 9).
Assembled batteries with more than two grams of lithium content		

(b) Transportation of lithium metal batteries packed with or contained in equipment

1) For batteries packed with equipment, follow the necessary requirements of UN3091 PI969. Batteries are classified into either Section II/Section I depending on the lithium content/packaging requirements.

2) For batteries contained in equipment, follow the necessary requirements of UN3091 PI970. Batteries are classified into either Section II/Section I depending on the lithium content/packaging requirements.
The special handling may be unnecessary depending on the number of batteries and gross mass per package.

Figure. Example of Mitsubishi Label with Battery Illustration

(4) Details of the package change

The following caution is added to the packages of the target batteries.
"Containing lithium metal battery. Regulations apply for transportation."

(5) Transportation precaution for customers

For sea or air transportation, attaching the handling label (Fig. app. 1) must be attached to the package of a Mitsubishi cell or battery. In addition, attaching it to the outer package containing several packages of Mitsubishi cells or batteries is also required. When the content of a package must be handled as dangerous goods (Class 9), the Shipper's Declaration for Dangerous Goods is required, and the package must be compliant with Class 9 Packages. Documentations like the handling label in the specified design and the Shipper's Declaration for Dangerous Goods are required for transportation.
Please attach the documentations to the packages and the outer package.

The IATA Dangerous Goods Regulations are revised, and the requirements are changed annually.
When customers transport lithium batteries by themselves, the responsibility for the cargo lies with the customers. Thus, be sure to check the latest version of the IATA Dangerous Goods Regulations.

App. 7 Symbol for the new EU Battery Directive

Symbol for the new EU Battery Directive (2006/66/EC) that is plastered to general-purpose AC servo battery is explained here.

Note. This symbol mark is for EU countries only.

This symbol mark is according to the directive 2006/66/EC Article 20 Information for end-users and Annex II.
Your MITSUBISHI ELECTRIC product is designed and manufactured with high quality materials and components which can be recycled and/or reused.
This symbol means that batteries and accumulators, at their end-of-life, should be disposed of separately from your household waste.
If a chemical symbol is printed beneath the symbol shown above, this chemical symbol means that the battery or accumulator contains a heavy metal at a certain concentration.
This will be indicated as follows.
Hg: mercury (0.0005%), Cd: cadmium (0.002%), Pb: lead (0.004%)
In the European Union there are separate collection systems for used batteries and accumulators. Please, dispose of batteries and accumulators correctly at your local community waste collection/recycling centre.
Please, help us to conserve the environment we live in!

App. 8 Compliance with the European EC directives

App. 8.1 What are EC directives?

The EC directives were issued to standardize the regulations of the EU countries and ensure smooth distribution of safety-guaranteed products. In the EU countries, the machinery directive (effective in January, 1995), EMC directive (effective in January, 1996) and low voltage directive (effective in January, 1997) of the EC directives require that products to be sold should meet their fundamental safety requirements and carry the CE marks (CE marking). CE marking applies also to machines and equipment into which servos have been installed.

(1) EMC directive

The EMC directive applies to the servo units alone. This servo is designed to comply with the EMC directive. The EMC directive also applies the servo-incorporated machines and equipment. This requires the EMC filters to be used with the servo-incorporated machines and equipment to comply with the EMC directive. For specific EMC directive conforming methods, refer to the EMC Installation Guidelines (IB(NA)67310).

(2) Low voltage directive

The low voltage directive applies also to servo units alone. This servo is designed to comply with the low voltage directive.

(3) Machinery directive

The servo amplifiers comply with the safety components laid down in the machinery directive.
Do not allow using the machine until the machine in which the servo amplifier is mounted is declared to comply with the machinery directive.

App. 8.2 For compliance

Be sure to perform an appearance inspection of every unit before installation. In addition, have a final performance inspection on the entire machine/system, and keep the inspection record.

(1) Servo amplifiers and servo motors used

Use the servo amplifiers and servo motors which are standard product.

Servo amplifier : MR-J3-10T to MR-J3-22KT・MR-J3-10T1 to MR-J3-40T1・MR-J3-60T4 to MR-J3-22KT4
Servo motor : HF-MP□・HF-KP□・HF-SP□・HF-SP□4・HC-RP□・HC-UP□・HC-LP□
HA-LP□・HA-LP□4・HF-JP□ ・HF-JP□4

(2) Structure

The control circuit provides safe separation to the main circuit in the servo amplifier.

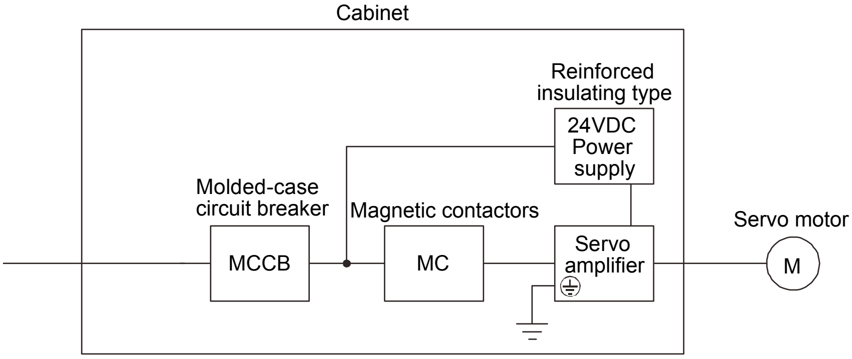

(3) Environment

(a) Operate the servo amplifier at pollution degree 2 or 1 set forth in IEC/EN 60664-1. For this purpose, install the servo amplifier in a cabinet which is protected against water, oil, carbon, dust, dirt, etc. (IP54).

(b) Environment

Environment			Conditions
(Note 1) Ambient temperature	In operation	[°C]	(Note 2) 0 to 55
		[°F]	32 to 131
	In storage, in transportation	[°C]	−20 to 65
		[°F]	−4 to 149
Ambient humidity	In operation, in storage, in transportation		90%RH or less
Maximum altitude	In operation, in storage		1000m or less
	In transportation		10000m or less

Note 1. Ambient temperature is the internal temperature of the cabinet.

2. The servo amplifier 200V 3.5kW or less and 100V 400W or less can be mounted closely. In this case, keep the ambient temperature within 0 to 45℃ (32 to 113℉) or use the servo amplifier with 75 or less of the effective load ratio.

(4) Power supply

(a) This servo amplifier can be supplied from star-connected supply with earthed neutral point of overvoltage category Ⅲ set forth in IEC/EN 60664-1. However, when using the neutral point of 400V system for single phase supply, a reinforced insulating transformer is required in the power input section.

(b) For the interface power supply, use a 24VDC power supply with reinforced insulation on I/O terminals.

(5) Grounding

(a) To prevent an electric shock, the protective earth (PE) terminal (marked ⏚) of the servo amplifier must be connected to the protective earth (PE) of the cabinet.

(b) Do not connect two ground cables to the same protective earth (PE) terminal. Always connect cables to the terminals one-to-one.

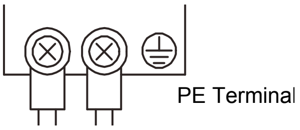

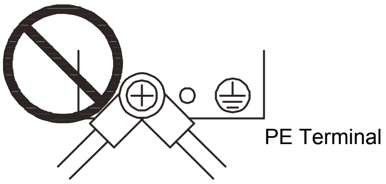

(c) If an earth leakage circuit breaker is used, always earth the protective earth (PE) terminal of the servo amplifier to prevent an electric shock.

(6) Wiring

(a) The wires to be connected to the terminal block of the servo amplifier must have crimping terminals provided with insulating tubes to prevent contact with adjacent terminals.

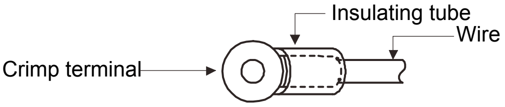

(b) Use the servo motor-side power connector which complies with the IEC/EN Standard.
The IEC/EN Standard-compliant power connector sets are available from us as options.

(c) The servo amplifier must be installed in the metal cabinet.

(7) Peripheral devices, options

(a) Use the circuit breaker and magnetic contactor models which are IEC/EN Standard-compliant products given in this Instruction Manual.
Use a residual current device (RCD) of type B. When it is not used, provide insulation between the servo amplifier and other device by double insulation or reinforced insulation, or install a transformer between the main power supply and servo amplifier.

(b) The sizes of the wires given in this Instruction Manual meet the following conditions. For use in any other conditions, follow Table 5 and Annex C of IEC/EN 60204-1.

- Ambient temperature: 40℃ (104℉)
- Sheath : PVC (polyvinyl chloride)
- Installation on wall surface or open cable tray

(c) Use the EMC filter for noise reduction.

(8) Performing EMC tests

When EMC tests are run on a machine/device into which the servo amplifier has been installed, it must conform to the electromagnetic compatibility (immunity/emission) standards after it has satisfied the operating environment/electrical equipment specifications.
For the other EMC directive guidelines on the servo amplifier, refer to the EMC Installation Guidelines (IB(NA)67310).

App. 9 Compliance with UL/cUL Standard

This servo amplifier complies with UL 508C and CSA C22.2 No. 14 standard.

(1) Servo amplifiers and servo motors used
Use servo amplifiers and servo motors which are standard products.

Servo amplifier	Servo motor							
	HF-KP	HF-MP	HF-SP	HC-RP	HC-UP	HC-LP	HA-LP	HF-JP
MR-J3-10T(1)	053・13	053・13						
MR-J3-20T(1)	23	23						
MR-J3-40T(1)	43	43						
MR-J3-60T			51・52			52		53
MR-J3-70T	73	73			72			
MR-J3-100T			81・102			102		73・103
MR-J3-200TN			121・201・152・202	103・153	152	152		153・203
MR-J3-350T			301・352	203	202	202		353
MR-J3-500T			421・502	353・503	352・502	302	502	503
MR-J3-700T			702				601・701M・702	703
MR-J3-11KT							801・12K1・11K1M・11K2	903・11K1M
MR-J3-15KT							15K1・15K1M・15K2	15K1M
MR-J3-22KT							20K1・25K1・22K1M・22K2	

Servo motor	Servo motor		
	HF-SP	HA-LP	HF-JP
MR-J3-60T4	524		534
MR-J3-100T4	1024		734・1034
MR-J3-200T4	1524・2024		1534・2034
MR-J3-350T4	3524		3534
MR-J3-500T4	5024		5034
MR-J3-700T4	7024	6014・701M4	7034
MR-J3-11KT4		8014・12K14・11K1M4・11K24	9034・11K1M4
MR-J3-15KT4		15K14・15K1M4・15K24	15K1M4
MR-J3-22KT4		20K14・22K1M4・22K24	

(2) Installation

The MR-J3 series have been approved as the products which have been installed in a control box. The minimum control box size is based on 150% of each unit combination. And also, design the control box so that the ambient temperature in the control box is 55℃ (131°F) or less.

The servo amplifier must be installed in a metal control box.

(3) Short circuit rating (SCCR: Short Circuit Current Rating)

Suitable For Use In A Circuit Capable Of Delivering Not More Than 100 kA rms Symmetrical Amperes, 500 Volts Maximum.

(4) Flange

Mount the servo motor on a flange which has the following size or produces an equivalent or higher heat dissipation effect.

Flange size [mm]	Servo motor						
	HF-MP・HF-KP	HF-SP	HC-RP	HC-UP	HC-LP	HA-LP	HF-JP
250×250×6	053・13・23						
250×250×12	43	51・81 52(4) to 152(4)	103 to 203		52 to 152		53 to 203 534 to 2034
300×300×12	73						
300×300×20		121・201 202(4) to 352(4)			202・302		
550×550×30			353・503	72・152			353 to 503 3534 to 5034
650×650×35		301・421 502(4) to 702(4)		202 to 502		601(4) to 12K1(4) 701M(4) to 15K1M(4) 502 to 22K2 11K24 to 22K24	11K1M・15K1M 11K1M・15K1M
950×950×35						15K1(4) to 37K1(4) 22K1M・22K1M4	

(5) Capacitor discharge time

The capacitor discharge time is as follows. To ensure safety, do not touch the charging section for 15 minutes after power-off.

Servo amplifier	Discharge time [min]
MR-J3-10T・20T	1
MR-J3-40T・60T(4) ・10T1・20T1	2
MR-J3-70T	3
MR-J3-40T1	4
MR-J3-100T(4)	5

Servo amplifier	Discharge time [min]
MR-J3-200TN・200T4・350T	9
MR-J3-350T4・500T(4) ・700T(4)	10
MR-J3-11KT(4)	4
MR-J3-15KT(4)	6
MR-J3-22KT(4)	8

(6) Overload protection characteristics

An electronic thermal relay is built in the servo amplifier to protect the servo motor, servo amplifier and servo motor power line from overloads. The operation characteristics of the electronic thermal relay are shown below. It is recommended to use an unbalanced torque-generated machine, such as a vertical motion shaft, so that unbalanced torque is not more than 70% of the rated torque. When you carry out adhesion mounting of the servo amplifier, make circumference temperature into 0 to 45°C (32 to 113°F) or use it with 75% or less of effective load torque.

Servo amplifier MR-J3 series have servo motor overload protection. (The motor full load current is 115% rated current.)

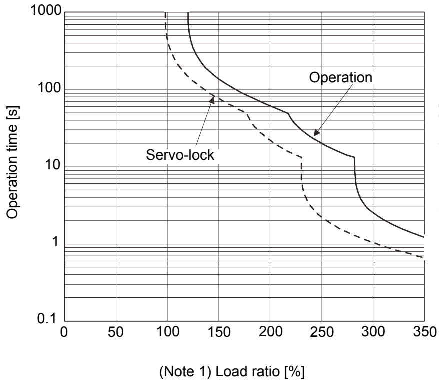

MR-J3-10T(1)

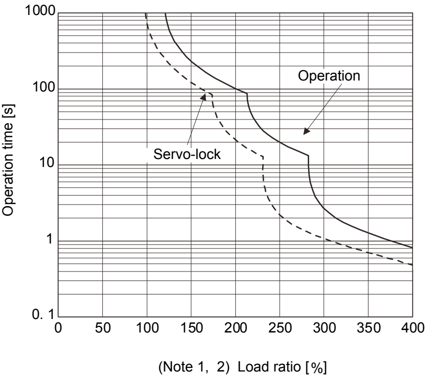

MR-J3-20T(1) ・ MR-J3-40T(1)
MR-J3-60T(4) ・ MR-J3-100T(4)

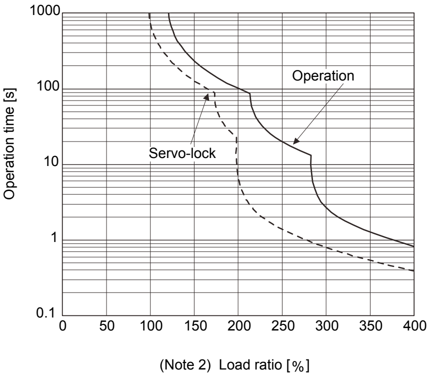

MR-J3-200TN ・ 200T4 ・ 350T(4)

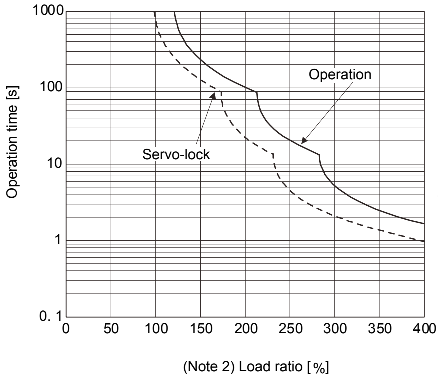

MR-J3-500T(4) ・ MR-J3-700T(4)

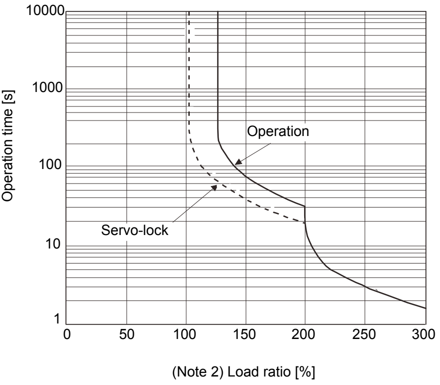

MR-J3-11KT(4) ・ MR-J3-22KT(4)

Note 1. The operation time at the load ratio of 300 to 350% applies when the maximum torque of HF-KP servo motor is increased to 350%.
2. The operation time at the load ratio of 300 to 400% applies when the maximum torque of HF-JP servo motor is increased to 400%.

(7) Selection example of wires

To comply with the UL/cUL standard, use UL-approved copper wires rated at 60/75°C for wiring.

The following table shows the wire sizes [AWG] and the crimp terminal symbols rated at 60°C. The sizes and the symbols rated at 75°C are shown in the brackets.

Servo amplifier	(Note 3) Wire [AWG]			
	L_1 ▪ L_2 ▪ L_3 ▪ ⏚	L_{11} ▪ L_{21}	U ▪ V ▪ W ▪ P_1 ▪ P_2 ▪ ⏚	P ▪ P_2 ▪ C
MR-J3-10T(1) to 40T(1) ▪ 60T ▪ 70T	14(14)	16(16)	(Note 4) 14(14)	14(14)
MR-J3-100T ▪ 200TN				
MR-J3-350T	12(12)		12(12)	
(Note 1) MR-J3-500T	10(10): a(a)	16(16): h(h)	10(10): a(a)	14(14): g(g)
(Note 1) MR-J3-700T	8(8): b(b)		8(8): b(b)	12(12): a(a)
(Note 1) MR-J3-11KT	6(6): c(c)	16(16): g(g)	4(4): d(c)	10(10): j(j)
(Note 1) MR-J3-15KT	4(4): d(d)		2(3): e(d)	
(Note 1) MR-J3-22KT	1/0(1): f(p)		-(1): -(p)	10(10): k(k)
MR-J3-60T4	14(14)	16(16)	14(14)	14(14)
MR-J3-100T4				
MR-J3-200T4				
MR-J3-350T4	14(14): g(g)	16(16): h(h)	14(14): g(g)	14(14): g(g)
(Note 1) MR-J3-500T4	10(12): a(a)		10(12): a(a)	
(Note 1) MR-J3-700T4			10(10): a(a)	
(Note 1) MR-J3-11KT4	8(10): l(j)	16(16): g(g)	8(8): l(l)	12(12): j(j)
(Note 1) MR-J3-15KT4	6(8): c(l)		4(6): d(c)	10(10): j(j)
(Note 1) MR-J3-22KT4	6(6): m(m)		4(6): n(m)	10(10): k(k)

Servo amplifier	(Note 3) Wire [AWG]		
	B1 ▪ B2	BU ▪ BV ▪ BW	OHS1/OHS2
MR-J3-10T(1) to 40T(1) ▪ 60T ▪ 70T	16(16)		
MR-J3-100T ▪ 200TN			
MR-J3-350T			
(Note 1) MR-J3-500T			
(Note 1) MR-J3-700T		(Note 2) 14(14)	(Note 2) 16(16)
(Note 1) MR-J3-11KT		14(14)	16(16)
(Note 1) MR-J3-15KT			
(Note 1) MR-J3-22KT			
MR-J3-60T4			
MR-J3-100T4			
MR-J3-200T4			
MR-J3-350T4			
(Note 1) MR-J3-500T4			
(Note 1) MR-J3-700T4		(Note 2) 14(14)	(Note 2) 16(16)
(Note 1) MR-J3-11KT4		14(14)	16(16)
(Note 1) MR-J3-15KT4			
(Note 1) MR-J3-22KT4			

Note 1. To connect these models to a terminal block, be sure to use the screws that come with the terminal block.

2. For the servo motor with a cooling fan.

3. Alphabets in the table indicate crimping tools. Refer to the following table for the crimp terminals and crimping tools.

4. To wire the servo amplifier and the HF-MP ▪ KP servo motor, use MR-PWS1CBL (option). To extend the wiring, use the wire size of AWG14.

Table: Recommended crimp terminals

Symbol	Servo amplifier-side crimp terminal				Manufacturer
	(Note 2) Crimp terminal	Applicable tool			
		Body	Head	Dice	
a	FVD5.5-4	YNT-1210S			Japan Solderless Terminals
(Note 1) b	8-4NS	YHT-8S			
c	FVD14-6	YF-1 ▪ E-4	YNE-38	DH-112 ▪ DH-122	
d	FVD22-6			DH-113 ▪ DH-123	
(Note 1) e	38-6	YPT-60-21		TD-112 ▪ TD-124	
		YF-1 ▪ E-4	YET-60-1		
(Note 1) f	R60-8	YPT-60-21		TD-113 ▪ TD-125	
		YF-1 ▪ E-4	YET-60-1		
g	FVD2-4	YNT-1614			
h	FVD2-M3				
j	FVD5.5-6	YNT-1210S			
k	FVD5.5-8				
l	FVD8-6	YF-1 ▪ E-4	YNE-38	DH-111 ▪ DH-121	
m	FVD14-8			DH-112 ▪ DH-122	
n	FVD22-8			DH-113 ▪ DH-123	
(Note 1) p	R38-8	YPT-60-21		TD-112 ▪ TD-124	
		YF-1 ▪ E-4	YET-60-1		
q	FVD2-6	YNT-1614			

Note 1. Coat the crimping part with an insulation tube.

2. Always use recommended crimping terminals or equivalent since some crimping terminals cannot be installed depending on the size.

(8) Terminal block tightening torque

Servo amplifier	Tightening torque [N ▪ m]													
	L_1	L_2	L_3	N	P_1	P_2	P	C	L_{11}	L_{21}	U	V	W	PE
MR-J3-10T(1) to 40T(1) ▪ 60T to 100T ▪ 60T4 ▪ 100T4 ▪ 200TN ▪ 200T4														1.2
MR-J3-200T-RT ▪ 350T	0.6										0.6			
MR-J3-350T4 ▪ 500T(4) ▪ 700T(4)	1.2								0.8		1.2			
MR-J3-11KT(4) ▪ 15KT(4)	3.0						3.0		1.2		3.0			
MR-J3-22KT(4)	6.0						6.0				6.0			

(9) About wiring protection

For installation in the United States, branch circuit protection must be provided, in accordance with the National Electrical Code and any applicable local codes.

For installation in Canada, branch circuit protection must be provided, in accordance with the Canada Electrical Code and any applicable provincial codes.

(10) Options and peripheral equipment

Use the UL/cUL standard-compliant products.

Use the molded-case circuit breaker (UL489 Listed MCCB) or a Class T fuse indicated in the table below.

Servo amplifier	Molded-case circuit breaker (Note)		Fuse	
	Current	Voltage AC [V]	Current [A]	Voltage AC [V]
MR-J3-10T(1) ▪ 20T	50A frame 5A	240	10	300
MR-J3-40T ▪ 20T1	50A frame 10A		15	
MR-J3-60T to 100T ▪ 40T1	50A frame 15A		20	
MR-J3-200TN	50A frame 20A		40	
MR-J3-350T	50A frame 30A		70	
MR-J3-500T	50A frame 50A		125	
MR-J3-700T	100A frame 75A		150	
MR-J3-11KT	100A frame 100A		200	
MR-J3-15KT	225A frame 125A		250	
MR-J3-22KT	225A frame 175A		350	
MR-J3-60T4	50A frame 5A	600Y/347	10	600
MR-J3-100T4	50A frame 10A		15	
MR-J3-200T4	50A frame 15A		25	
MR-J3-350T4	50A frame 20A		35	
MR-J3-500T4	50A frame 30A		50	
MR-J3-700T4	50A frame 40A		65	
MR-J3-11KT4	60A frame 60A		100	
MR-J3-15KT4	100A frame 7A		150	
MR-J3-22KT4	225A frame 125A		175	

Note. Listed molded-case circuit breakers are for when the power factor improving reactor is not used.

(11) Configuration diagram

Representative configuration diagram example to conform to the UL/cUL standard is shown below. The grounding wiring is excluded from the figure configuration.

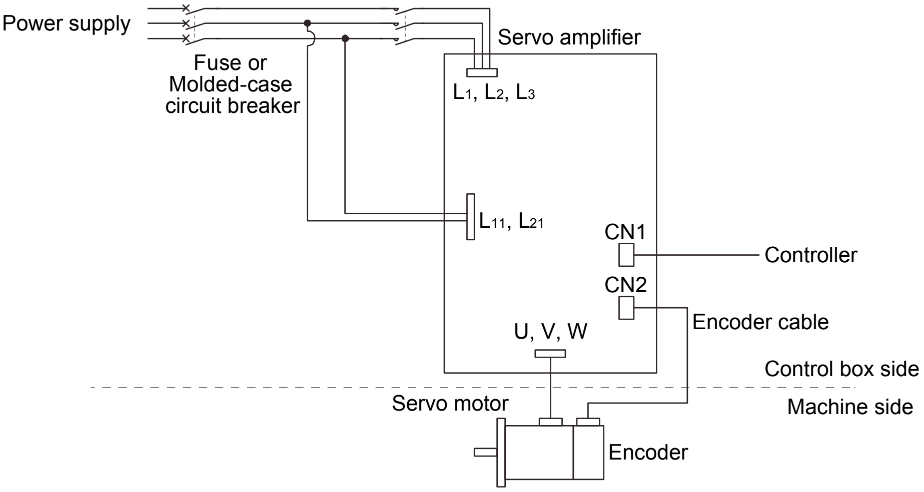

App. 10 Model change of MR-J3-200T

The models of MR-J3-200T servo amplifiers manufactured in July 2010 or later have been changed to MR-J3-200TN. There is no change in appearance or connector from servo amplifiers manufactured in April 2008 to June 2010.
Refer to the following table for details.

<table>
<tr><td>Date of manufacture</td><td>March 2008 or earlier (Note 1)</td><td>April 2008 or later</td><td>July 2010 or later</td></tr>
<tr><td>Model</td><td>MR-J3-200T</td><td>MR-J3-200T</td><td>MR-J3-200TN</td></tr>
<tr><td>Dimensions</td><td>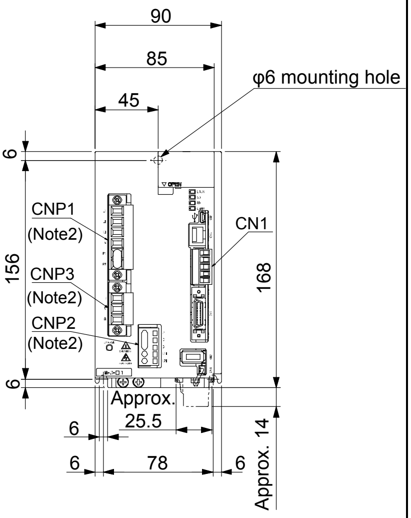
</td><td colspan="2">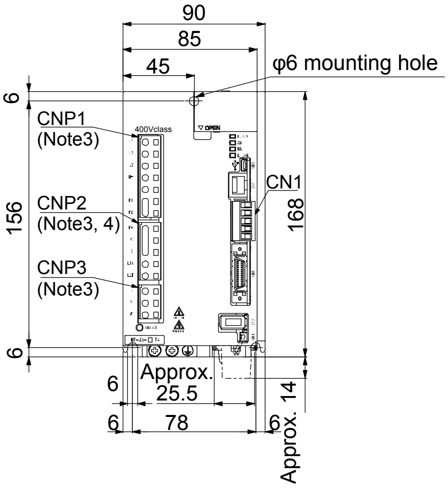
</td></tr>
</table>

Note 1. Servo amplifiers manufactured in March 2008 or earlier are also available. However, the mounting hole is changed. For details, contact your local sales office.
2. The following shows the model of each connector. CNP1: PC4/6-STF-7,62-CRWH, CNP2: 54927-0520, CNP3: PC4/3-STF-7,62-CRWH
3. The following shows the model of each connector. CNP1: 721-207/026-000, CNP2: 721-205/026-000, CNP3: 721-203/026-000
4. Twin type connector for CNP2 (MR-J3CNP2-J1: 721-2205/026-000 (WAGO)) is also available.

MEMO

REVISIONS

*The manual number is given on the bottom left of the back cover.

Print Data	*Manual Number	Revision	
Apr. 2006	SH(NA)030058-A	First edition	
Jul. 2006	SH(NA)030058-B	Chapter 2	CAUTION added
		Section 3.5.2(2)	Description of DB changed
		Section 3.5.3	Note deleted
		Section 3.6.3(1)	On duration: 5ms of RYn1 and RYn2 in diagram modified
		Section 3.6.3(2)	On duration: 5ms of RYn1 and RYn2 in diagram modified
		Section 3.6.3(3)	On duration: 5ms of RYn1 and RYn2 in diagram modified
		Section 3.7.1	Diagram partly modified
		Section 4.8.2(3)(b)	Parameter No.19 in diagram changed
		Section 4.10.2(2)	POINT added
		Section 5.6.5(2)	NOTE added
		Section 5.6.8	POINT changed
		Section 5.8(1)	Restrictions changed
		Section 5.8(5)(a)	POINT added
		Section 6.2.1	Name of parameter No.PB17: For manufacturer setting changed
		Section 6.2.2	Name of parameter No.PB17: For manufacturer setting changed
		Section 6.3.5	Parameter No.12 in diagram changed
		Section 6.4.2	Initial value: 0000h of parameter No. PD20 modified Sentence of parameter No. PD24 changed
		Section 9.3(1)(a)	Parameter No. PB07 added
		Section 9.5	Section title modified
		Section 13.1	Diagrams added
		Section 14.1.1	Model: MR-CCN1 of No.33 modified
		Section 15.4.1(5)	Commands: [3] and [5] added
		Section 15.4.2	(15) Group setting (Command [9][F]) added
		App 1	Name of parameter No.PB17: For manufacturer setting changed
Oct. 2007	SH(NA)030058-C	Servo amplifier	MR-J3-60T4 to MR-J3-22KT4 added
		Servo motor	HF-SP524/1024/1524/2024/3524/5024/7024 HA-LP6014/701M4 added
		Section 1.1.2	Note regarding cooling fan added
		Section 1.6.1	Description for "motor power supply connector" changed to "servo motor power connector"
		Section 1.7	Note added with change of notation for power supply
		Section 2.1 (1)(b)	POINT description changed
		Section 4.1	Note regarding stepdown transformer added
		Section 4.3.3 (3)	Wiring method for MR-J3-200T4 added as (3)
		Section 4.3.3 (4)	Cable insertion method added for Wago Japan
		Section 4.3.3 (5)	Cable insertion method for Phoenix Contact Connector changed
		Section 4.11.3	Note regarding circuit breaking method deleted
		Section 6.1.4	For parameter No.PA02, setting values 80 to 87 added
		Section 7.1	Compatible versions added on table
		Section 11.4.2	For descriptions of A10, A30 and A33, MR-J3-□T4 added
		Section 12.2	Connector type changed for RoHS compatibility
		Section 13.1	Diagram layout changed

Print Data	*Manual Number	Revision	
Oct. 2007	SH(NA)030058-C	Section 13.2	400V compatible added
		Section 13.3	Dynamic brake time constant and load inertia moment ratio compatible with 400V added. The calculation methods and graph in section 13.3.1, the permissible load inertia moment in 13.3.2, each divided by paragraph.
		Section 13.5	Inrush current at 400V added
		Section 14.1.1	Connector model changed for RoHS compatibility
		Section 14.1.1 2)	Connector for MR-J3-200T4/350T4 added
		Section 14.1.2	Connector type and configuration changed for RoHS compatibility
		Section 14.2 (1)	400V compatible regenerative option added
		Section 14.2 (2)(b)	Descriptions of table modified
		Section 14.2 (3)	For parameter No.PA02, setting values 80 to 87 added
		Section 14.2 (4)	400V compatible regenerative option added
		Section 14.2 (5)(b),(c)	Due to the addition of MR-RB34-4 and MR-RB54-4, changed dimension added
		Section 14.2 (5)	Description added
		Section 14.3 (3)(b)	Outline drawing and dimension table changed
		Section 14.4 (2)	Note regarding stepdown transformer added
		Section 14.4 (3)	FR-RC-H15K, FR-RC-H30K, FR-RC-H55K added
		Section 14.4 (4)	FR-RC-H15K, FR-RC-H30K, FR-RC-H55K added
		Section 14.5 (3)(b)	Note regarding stepdown transformer added
		Section 14.5 (4)(b) 2)	Wire diameter instructions changed
		Section 14.5 (6)	Description "compliant with JIS" deleted
		Section 14.6 (2)	Circuit in connection example changed, note regarding stepdown transformer added
		Section 14.7 (3)	Outline drawing added
		Section 14.9 (1)	Recommended wires compliant with MR-J3-60T4 to MR-J3-22KT4 added
		Section 14.9 (3)	Recommended twist cables for CC-Link changed
		Appendix 4	Table for changing connector set to RoHS compliant products added
Feb. 2008	SH(NA)030058-D	Safety Instructions	
		1. Additional instructions	Partial change of sentence
		CONFORMANCE WITH UL/C-UL STANDARD	
		(3)	Original item title: Short circuit rating, Original current value: 5000A
		(5)	Fuse deleted
		<<About the wires used for wiring>>	Addition
		Section 1.2 (1)	Original mass of MR-J3-200T: 2.3kg
		Section 1.4	Overview of MR-J3-200T changed
		Section 1.6.1 (2)	Overview of MR-J3-200T changed Addition in diagram
		Section 1.7 (3)	Overview of MR-J3-200T changed Addition in diagram
		Section 2.1 (1)(b)	POINT Change of sentence
		Section 3.7.5 (2)	Ladder partial change
		Section 4.3.1	Description in table partially changed
		Section 4.3.3	Components of terminal block for MR-J3-200T changed

Print Data	*Manual Number	Revision	
Feb. 2008	SH(NA)030058-D	Section 4.10.2 (3)(b)	Figure partially changed
		Section 4.11.2 (1)	Change of diagram
		Section 4.11.2 (5) to (8)	No-fuse breaker for cooling fan added
		Section 5.3 (1)	Change of diagram
		Section 5.3 (2)	Indication description and Note 2 added
		Section 7.2 (1)	Component description changed
		Section 7.2 (2) 1)	RS-422/232C converter FA-T-RS40VS deleted
		Section 8.5.7 (1)(a)	Addition of sentence
		Section 11.4.2	Definition of Parameter error (A37) changed
		Section 12.1 (5)	Outline drawing of MR-J3-200T changed, POINT added
		Section 14.1.1 2)	Components of MR-J3-200T terminal block changed, Applicable wire size for WAGO terminal block changed
		Section 14.1.3 (2)	Addition of Note
		Section 14.1.4 (2)	Addition of Note
		Section 14.5 (3)(a), (b)	Addition of Note
		Section 14.5 (4)	POINT addition
		Section 14.9	600V Grade heat-resistant polyvinyl chloride insulated wire (HIV wire) added
		Section 14.10	Fuse class changed (original: K5 class)
		Section 14.11	Note added to the table
		Appendix 5	Addition
		Appendix 6	Addition
Jun. 2008	SH(NA)030058-E	All pages	“PLC” changed to “programmable controller”
		CONFORMANCE WITH UL/cUL STANDARD	
		(2) Installation	Change of sentence
		(3) Short circuit rating	Change of sentence
		Section 1.1.6	Error of communication alarm display position corrected
		Section 3.5.1 (2)	Note 4. Addition of sentence
		Section 3.5.2 (3) (a)	RWwn+6 Addition of sentence
		Section 3.7	Changed
		Section 3.8	Changed
		Section 4.10.1	CAUTION changed
		Section 5.4.2 (3)	Timing chart partially changed, Note 1 changed
		Section 5.4.3	Description added to the remote register-based position/ speed specifying system selection Timing chart partially changed, Note 1 changed
		Section 5.6.1 (1)	Note. Deleted
		Section 5.6.2 (3)	Note. Change of sentence
		Section 5.6.3 (2)	Note. Change of sentence
		Section 5.6.4 (2)	Note. Change of sentence
		Section 5.6.5 (2)	Note. Change of sentence
		Section 5.6.6	POINT addition
		Section 5.6.6 (1)	Change of table
		Section 5.6.7 (2)	Note. Change of sentence
		Section 5.6.8 (2)	Note. Change of sentence
		Section 5.6.9 (2)	Note. Change of sentence
		Section 5.6.10 (2)	Note. Change of sentence

Print Data	*Manual Number	Revision	
Jun. 2008	SH(NA)030058-E	Section 5.6.11 (2)	Note. Change of sentence
		Section 5.6.12 (2)	Note. Change of sentence
		Section 6.3	Parameter No.PC28 added
		Section 6.4.3	Addition
		Section 6.4.4	Addition
		Section 7.7.1	Starting method added
		Section 11.4.2	“Cause” added to CC-Link alarm (A8D)
		Section 14.1	POINT addition
		Chapter 16	Addition
		Appendix 7	Addition
		Appendix 8	Addition
Jul. 2012	SH(NA)030058-F	Section 1.6.1 (1) to (6)	The part of diagram is changed.
		Section 3.2.5	
		Section 11.3	CAUTION is added.
		Section 11.4.1	The part of table is changed.
		Section 11.4.2	The part of table is changed.
		Section 16.9.3 (1)	The part of table is changed.
		Appendix 5.1	The part of diagram is changed.
			The part of diagram is changed.
Jun. 2014	SH(NA)030058-G	Section 14.2 (4) (c)	CAUTION is added.
May 2016	SH(NA)030058-H	Section 1.1.2 (1)	Diagram partially changed.
		(2)	Diagram partially changed.
		(3)	Diagram partially changed.
			Note 3 added.
		Section 1.2 (1)	Note 3 added.
		(2)	Note 2 added.
		Section 3.5.2 (2)	Partially changed.
		Section 4.1 (7)	Diagram partially changed.
			Note 6, 7 changed.
			Note 8 added.
		(8)	Diagram partially changed.
			Note 9 added.
		Section 4.10.2 (3) (a) 1)	Diagram partially changed.
			Note 2, 4 changed.
			"Note 4" changed to "Note 5".
		2)	Diagram partially changed.
		Chapter 9	POINT added.
		Section 13.3	POINT added.
		Section 13.3.1 (1)	Partially changed.
		Section 13.3.2	Partially changed.
		Section 14.6	CAUTION added.
			POINT partial added.
		Section 14.6 (1)	Partially changed.
		(2)	Partially changed.
		Section 14.18 (2)	Diagram partially changed.
		Section 16.2.2 (2)	Partially changed.
		App. 5	Partially changed.

Print Data	*Manual Number	Revision
May 2016	SH(NA)030058-H	Section 1.6.1 (1) to (6) Diagram partially changed. Section 3.2.5 CAUTION added. Section 5.6.5 (2) Diagram partially changed. Section 11.3 Table partially changed. Section 11.4.1 Table partially changed. Section 11.4.2 Table partially changed. Section 16.9.3 (2) Diagram partially changed. Appendix 7.1 Diagram partially changed. Electrical symbols entirely changed. (JIS C0617 standard) HF-JP series servo motor added. Speed control operation added. Chapter 17 Newly added.Entirely changed. Safety Instructions 2. To prevent fire, note the following Sentences partially changed. 4. Additional instructions Sentences added. (6) Maintenance, inspection and parts replacement Section 4.1 CAUTION added. Section 14.10 CAUTION added, Note 4 added to the table

MEMO

Country/Region	Sales office	Tel/Fax
USA	Mitsubishi Electric Automation, Inc. 500 Corporate Woods Parkway, Vernon Hills, IL 60061, U.S.A.	Tel : +1-847-478-2100 Fax : +1-847-478-2253
Mexico	Mitsubishi Electric Automation, Inc. Mexico Branch Mariano Escobedo #69, Col. Zona Industrial, Tlalnepantla Edo. Mexico, C.P.54030	Tel : +52-55-3067-7500 Fax : –
Brazil	Mitsubishi Electric do Brasil Comercio e Servicos Ltda. Avenida Adelino Cardana, 293, 21 andar, Bethaville, CEP 06401-147, Barueri SP, Brazil	Tel : +55-11-4689-3000 Fax : +55-11-4689-3016
Germany	Mitsubishi Electric Europe B.V. German Branch Mitsubishi-Electric-Platz 1, 40882 Ratingen, Germany	Tel : +49-2102-486-0 Fax : +49-2102-486-1120
UK	Mitsubishi Electric Europe B.V. UK Branch Travellers Lane, UK-Hatfield, Hertfordshire, AL10 8XB, U.K.	Tel : +44-1707-28-8780 Fax : +44-1707-27-8695
Italy	Mitsubishi Electric Europe B.V. Italian Branch Centro Direzionale Colleoni - Palazzo Sirio, Viale Colleoni 7, 20864 Agrate Brianza (Milano), Italy	Tel : +39-039-60531 Fax : +39-039-6053-312
Spain	Mitsubishi Electric Europe B.V. Spanish Branch Carretera de Rubi, 76-80-Apdo. 420, 08190 Sant Cugat del Valles (Barcelona), Spain	Tel : +34-935-65-3131 Fax : +34-935-89-1579
France	Mitsubishi Electric Europe B.V. French Branch 25, Boulevard des Bouvets, 92741 Nanterre Cedex, France	Tel : +33-1-55-68-55-68 Fax : +33-1-55-68-57-57
Czech Republic	Mitsubishi Electric Europe B.V. Czech Branch Avenir Business Park, Radlicka 751/113e, 158 00 Praha 5, Czech Republic	Tel : +420-251-551-470 Fax : +420-251-551-471
Poland	Mitsubishi Electric Europe B.V. Polish Branch ul. Krakowska 50, 32-083 Balice, Poland	Tel : +48-12-347-65-00 Fax : +48-12-630-47-01
Russia	Mitsubishi Electric (Russia) LLC St. Petersburg Branch Piskarevsky pr. 2, bld 2, lit “Sch”, BC “Benua”, office 720; 195027 St. Petersburg, Russia	Tel : +7-812-633-3497 Fax : +7-812-633-3499
Sweden	Mitsubishi Electric Europe B.V. (Scandinavia) Fjelievagen 8, SE-22736 Lund, Sweden	Tel : +46-8-625-10-00 Fax : +46-46-39-70-18
Turkey	Mitsubishi Electric Turkey A.S. Umraniye Branch Serifali Mahallesi Nutuk Sokak No:5, TR-34775 Umraniye / Istanbul, Turkey	Tel : +90-216-526-3990 Fax : +90-216-526-3995
UAE	Mitsubishi Electric Europe B.V. Dubai Branch Dubai Silicon Oasis, P.O.BOX 341241, Dubai, U.A.E.	Tel : +971-4-3724716 Fax : +971-4-3724721
South Africa	Adroit Technologies 20 Waterford Office Park, 189 Witkoppen Road, Fourways, South Africa	Tel : +27-11-658-8100 Fax : +27-11-658-8101
China	Mitsubishi Electric Automation (China) Ltd. Mitsubishi Electric Automation Center, No.1386 Hongqiao Road, Shanghai, China	Tel : +86-21-2322-3030 Fax : +86-21-2322-3000
Taiwan	SETSUYO ENTERPRISE CO., LTD. 6F, No.105, Wugong 3rd Road, Wugu District, New Taipei City 24889, Taiwan	Tel : +886-2-2299-2499 Fax : +886-2-2299-2509
Korea	Mitsubishi Electric Automation Korea Co., Ltd. 7F-9F, Gangseo Hangang Xi-tower A, 401, Yangcheon-ro, Gangseo-Gu, Seoul 07528, Korea	Tel : +82-2-3660-9510 Fax : +82-2-3664-8372/8335
Singapore	Mitsubishi Electric Asia Pte. Ltd. 307 Alexandra Road, Mitsubishi Electric Building, Singapore 159943	Tel : +65-6473-2308 Fax : +65-6476-7439
Thailand	Mitsubishi Electric Factory Automation (Thailand) Co., Ltd. 12th Floor, SV.City Building, Office Tower 1, No. 896/19 and 20 Rama 3 Road, Kwaeng Bangpongpang, Khet Yannawa, Bangkok 10120, Thailand	Tel : +66-2682-6522 to 6531 Fax : +66-2682-6020
Indonesia	PT. Mitsubishi Electric Indonesia Gedung Jaya 11th Floor, JL. MH. Thamrin No.12, Jakarta Pusat 10340, Indonesia	Tel : +62-21-3192-6461 Fax : +62-21-3192-3942
Vietnam	Mitsubishi Electric Vietnam Company Limited Unit 01-04, 10th Floor, Vincom Center, 72 Le Thanh Ton Street, District 1, Ho Chi Minh City, Vietnam	Tel : +84-8-3910-5945 Fax : +84-8-3910-5947
India	Mitsubishi Electric India Pvt. Ltd. Pune Branch Emerald House, EL-3, J Block, M.I.D.C., Bhosari, Pune - 411026, Maharashtra, India	Tel : +91-20-2710-2000 Fax : +91-20-2710-2100
Australia	Mitsubishi Electric Australia Pty. Ltd. 348 Victoria Road, P.O. Box 11, Rydalmere, N.S.W 2116, Australia	Tel : +61-2-9684-7777 Fax : +61-2-9684-7245

Warranty

1. Warranty period and coverage

We will repair any failure or defect hereinafter referred to as "failure" in our FA equipment hereinafter referred to as the "Product" arisen during warranty period at no charge due to causes for which we are responsible through the distributor from which you purchased the Product or our service provider. However, we will charge the actual cost of dispatching our engineer for an on-site repair work on request by customer in Japan or overseas countries. We are not responsible for any on-site readjustment and/or trial run that may be required after a defective unit are repaired or replaced.

[Term]

The term of warranty for Product is twelve (12) months after your purchase or delivery of the Product to a place designated by you or eighteen (18) months from the date of manufacture whichever comes first (“Warranty Period”). Warranty period for repaired Product cannot exceed beyond the original warranty period before any repair work.

[Limitations]

(1) You are requested to conduct an initial failure diagnosis by yourself, as a general rule.
It can also be carried out by us or our service company upon your request and the actual cost will be charged. However, it will not be charged if we are responsible for the cause of the failure.

(2) This limited warranty applies only when the condition, method, environment, etc. of use are in compliance with the terms and conditions and instructions that are set forth in the instruction manual and user manual for the Product and the caution label affixed to the Product.

(3) Even during the term of warranty, the repair cost will be charged on you in the following cases;
- (i) a failure caused by your improper storing or handling, carelessness or negligence, etc., and a failure caused by your hardware or software problem
- (ii) a failure caused by any alteration, etc. to the Product made on your side without our approval
- (iii) a failure which may be regarded as avoidable, if your equipment in which the Product is incorporated is equipped with a safety device required by applicable laws and has any function or structure considered to be indispensable according to a common sense in the industry
- (iv) a failure which may be regarded as avoidable if consumable parts designated in the instruction manual, etc. are duly maintained and replaced
- (v) any replacement of consumable parts (battery, fan, smoothing capacitor, etc.)
- (vi) a failure caused by external factors such as inevitable accidents, including without limitation fire and abnormal fluctuation of voltage, and acts of God, including without limitation earthquake, lightning and natural disasters
- (vii) a failure generated by an unforeseeable cause with a scientific technology that was not available at the time of the shipment of the Product from our company
- (viii) any other failures which we are not responsible for or which you acknowledge we are not responsible for

2. Term of warranty after the stop of production

(1) We may accept the repair at charge for another seven (7) years after the production of the product is discontinued. The announcement of the stop of production for each model can be seen in our Sales and Service, etc.

(2) Please note that the Product (including its spare parts) cannot be ordered after its stop of production.

3. Service in overseas countries

Our regional FA Center in overseas countries will accept the repair work of the Product. However, the terms and conditions of the repair work may differ depending on each FA Center. Please ask your local FA center for details.

4. Exclusion of loss in opportunity and secondary loss from warranty liability

Regardless of the gratis warranty term, Mitsubishi shall not be liable for compensation to:

(1) Damages caused by any cause found not to be the responsibility of Mitsubishi.

(2) Loss in opportunity, lost profits incurred to the user by Failures of Mitsubishi products.

(3) Special damages and secondary damages whether foreseeable or not, compensation for accidents, and compensation for damages to products other than Mitsubishi products.

(4) Replacement by the user, maintenance of on-site equipment, start-up test run and other tasks.

5. Change of Product specifications

Specifications listed in our catalogs, manuals or technical documents may be changed without notice.

6. Application and use of the Product

(1) For the use of our General-Purpose AC Servo, its applications should be those that may not result in a serious damage even if any failure or malfunction occurs in General-Purpose AC Servo, and a backup or fail-safe function should operate on an external system to General-Purpose AC Servo when any failure or malfunction occurs.

(2) Our General-Purpose AC Servo is designed and manufactured as a general purpose product for use at general industries.
Therefore, applications substantially influential on the public interest for such as atomic power plants and other power plants of electric power companies, and also which require a special quality assurance system, including applications for railway companies and government or public offices are not recommended, and we assume no responsibility for any failure caused by these applications when used
In addition, applications which may be substantially influential to human lives or properties for such as airlines, medical treatments, railway service, incineration and fuel systems, man-operated material handling equipment, entertainment machines, safety machines, etc. are not recommended, and we assume no responsibility for any failure caused by these applications when used.
We will review the acceptability of the abovementioned applications, if you agree not to require a specific quality for a specific application. Please contact us for consultation.

MODEL	MR-J3-T INSTRUCTIONMANUAL
MODEL CODE	1CW302

MITSUBISHI ELECTRIC CORPORATION

HEAD OFFICE : TOKYO BLDG MARUNOUCHI TOKYO 100-8310

SH(NA)030058-H(1605)MEE Printed in Japan