Changes for the Better

MITSUBISHI

LARGE CAPACITY INVERTER

FR-A500L

HIGH PERFORMANCE
&
HIGH-FUNCTIONS

FR-A540L-S60K~S375K(-CH)(-EC)(-E1)

- INSTRUCTION MANUAL -

MITSUBISHI
ELECTRIC

Thank you for choosing this Mitsubishi Large Capacity Inverter.

This instruction manual gives handling information and precaution for use of this equipment.

Incorrect handling might cause an unexpected fault. Before using the inverter, please read this manual carefully to use the equipment to its optimum.

Please forward this manual to the end user.

This section is specifically about safety matters	
Do not attempt to install, operate, maintain or inspect the inverter until you have read through this instruction manual and appended documents carefully and can use the equipment correctly. Do not use the inverter until you have a full knowledge of the equipment, safety information and instructions. In this instruction manual, the safety instruction levels are classified into “WARNING” and “CAUTION”.	
WARNING	Assumes that incorrect handling may cause hazardous conditions, resulting in death or severe injury.
CAUTION	Assumes that incorrect handling may cause hazardous conditions, resulting in medium or slight injury, or may cause physical damage only.
Note that the CAUTION level may lead to a serious consequence according to conditions. Please follow the instructions of both levels because they are important to personnel safety.	

SAFETY INSTRUCTIONS

1. Electric Shock Prevention

WARNING

- While power is on or when the inverter is running, do not open the front cover. You may get an electric shock.
- Do not run the inverter with the front cover removed. Otherwise, you may access the exposed high-voltage terminals or charging part of circuitry and get an electric shock.
- If power is off, do not remove the front cover except for wiring or periodic inspection. You may access the charged inverter circuits and get an electric shock.
- Before starting wiring or inspection, switch power off, wait for more at least 10 minutes and check for the presence of any residual voltage with meter (see chapter 2 for-further details.) etc.
- Any person who is involved in the wiring or inspection of this equipment should be fully competent to do the work.
- Always install the inverter before wiring. Otherwise, you may get an electric shock or be injured.
- Operate the switches with dry hands to prevent an electric shock.
- Do not subject the cables to scratches, excessive stress, heavy loads or pinching. Otherwise, you may get an electric shock.

2. Fire Prevention

CAUTION

- Mount the inverter on an incombustible surface. Installing the inverter directly on or near a combustible surface could lead to a fire.
- If the inverter has become faulty, switch off the inverter power. A continuous flow of large current could cause a fire.
- Do not connect the resistor directly to the DC terminals +(P), -(N). This could cause a fire.

3. Injury Prevention

CAUTION

- Apply only the voltage specified in the instruction manual to each terminal to prevent damage, etc.
- Ensure that the cables are connected to the correct terminals. Otherwise, damage, etc. may occur.
- Always make sure that polarity is correct to prevent damage, etc.
- After the inverter has been operating for a relatively long period of time, do not touch the inverter as it may be hot and you may get burnt.

4. Additional instructions

Also note the following points to prevent an accidental failure, injury, electric shock, etc.:

(1) Transportation and installation

⚠ CAUTION

- When carrying products, use correct lifting gear to prevent injury.
- Do not stack the inverter boxes higher than the number recommended.
- Ensure that installation position and material can withstand the weight of the inverter. Install according to the information in the Instruction Manual.
- Do not operate if the inverter is damaged or has parts missing.
- Do not hold the inverter by the front cover; it may fall off.
- Do not stand or rest heavy objects on the inverter.
- Check the inverter mounting orientation is correct.
- Prevent screws, wire fragments, conductive bodies, oil or other flammable substances from entering the inverter.
- Do not drop the inverter, or subject it to impact.
- Use the inverter under the following environmental conditions:

Ambient temperature	-10°C to +40°C (14°F to 104°F) (non-freezing)
Ambient humidity	90%RH or less (non-condensing)
Storage temperature	-20°C to +65°C (-4°F to 149°F)
Ambience	Indoors (free from corrosive gas, flammable gas, oil mist, dust and dirt)
Altitude, vibration	Maximum 1000m (3280.80feet.) above sea level for standard operation. After 1000 derate by 3% for every extra 500m up to 2500m (91%).

∗For transportation

Temperature	-20°C to 65°C (-4°F to 149°F)
Relative fumidity	90% or less
Air pressure	70kPa to 106kPa

(2) Wiring

⚠ CAUTION

- Do not fit capacitive equipment such as power factor correction capacitor, noise filter or surge suppressor to the output of the inverter.
- The connection orientation of the output cables U, V, W to the motor will affect the direction of rotation of the motor.

(3) Trial run

⚠ CAUTION

- Check all parameters, and ensure that the machine will not be damaged by sudden start-up.

(4) Operation

⚠ CAUTION

- When you have chosen the retry function, stay away from the equipment as it will restart suddenly after an alarm stop.
- The [STOP] key is valid only when the appropriate function setting has been made. Prepare an emergency stop switch separately.
- Make sure that the start signal is off before resetting the inverter alarm. A failure to do so may restart the motor suddenly.
- The load used should be a three-phase induction motor only. Connection of any other electrical equipment to the inverter output may damage the equipment.
- The electronic overcurrent protection does not guarantee protection of the motor from overheat.
- Do not use a magnetic contactor on the inverter input for frequent starting/stopping of the inverter.
- Use a noise filter to reduce the effect of electromagnetic interference. Otherwise nearby electronic equipment may be affected.
- Take measures to suppress harmonics. Otherwise power harmonics from the inverter may heat/damage the power capacitor and generator.
- When a 400V class motor is inverter-driven, it should be insulation-enhanced or surge voltages suppressed. Surge voltages attributable to the wiring constants may occur at motor terminals, deteriorating the insulation of the motor.
- When parameter clear or all clear is performed, each parameter returns to the factory setting. Re-set the required parameters before starting operation.
- The inverter can be easily set for high-speed operation. Before changing its setting, fully examine the performances of the motor and machine.
- In addition to the inverter's holding function, install a holding device (e. g. mechanical brake) to ensure safety.
- Before running the inverter which had been stored for a long period, always perform inspection and test operation.

(5) Emergency stop

⚠ CAUTION

- Provide a safety backup such as an emergency brake which will prevent the machine and equipment from hazardous conditions if the inverter fails.

(6) Maintenance, inspection and parts replacement

⚠ CAUTION

- Do not carry out a megger (insulation resistance) test on the control circuit of the inverter.

(7) Disposing of the inverter

⚠ CAUTION

- Treat as industrial waste.

(8) General instructions

Many of the diagrams and drawings in this instruction manual show the inverter without a cover, or partially open. Never run the inverter like this. Always replace the cover and follow this instruction manual when operating the inverter.

CONTENTS

1 OUTLINE 1

1.1 Pre-Operation Information 1
1.1.1 Precautions for operation 1
1.2 Basic Configuration 2
1.2.1 Basic configuration 2
1.3 Structure 3
1.3.1 Appearance and structure 3
1.3.2 Removal and reinstallation of the front cover 4
1.3.3 Removal and reinstallation of the operation panel 5

2 INSTALLATION AND WIRING 6

2.1 Installation 6
2.1.1 Instructions for installation 6
2.2 Wiring 8
2.2.1 Terminal connection diagram 8
2.2.2 Wiring of the main circuit 11
2.2.3 Wiring of the control circuit 15
2.2.4 Connection to the PU connector 19
2.2.5 Connection of stand-alone option units 22
2.2.6 Design information 23
2.3 Other wiring 24
2.3.1 Inverter-driven 400V class motor 24
2.3.2 Peripheral devices 24
2.3.3 Instructions for compliance with the UL and CSA standards 25
2.3.4 Instructions for compliance with the European standards 26
2.3.5 Earthing (EC version) 27

3 OPERATION 28

3.1 Pre-Operation Information 28
3.1.1 Devices and parts to be prepared for operation 28
3.1.2 Power on 30
3.1.3 Parameter check 30
3.2 Operation 36
3.2.1 Pre-operation checks 36
3.2.2 External operation mode (Operation using external input signals) 37
3.2.3 PU operation mode (Operation using the operation panel (FR-DU04)) 38
3.2.4 Combined operation mode (Operation using the external input signals and PU) 39

4 PARAMETER 40

4.1 Parameter List 40
4.2 Parameter Function Details 46

5 PROTECTIVE FUNCTIONS 155

5.1 Errors (alarms) 155
5.1.1 Error (alarm) definitions 155
5.1.2 Correspondences between digital and actual characters 159

5.1.3 Alarm code output ····· 160
5.1.4 Resetting the inverter ····· 160
5.2 Troubleshooting ····· 161
5.2.1 Checking the operation panel display at alarm stop ····· 161
5.2.2 Faults and check points ····· 163
5.3 Precautions for Maintenance and Inspection ····· 165
5.3.1 Precautions for maintenance and inspection ····· 165
5.3.2 Check items ····· 165
5.3.3 Periodic inspection ····· 165
5.3.4 Insulation resistance test using megger ····· 166
5.3.5 Dielectric strength test ····· 166
5.3.6 Replacement of parts ····· 169
5.3.7 Measurement of main circuit voltages, currents and power ····· 171

6 SPECIFICATIONS 173

6.1 Standard Specifications ····· 173
6.1.1 Model specifications ····· 173
6.1.2 Common specifications ····· 174
6.1.3 Outline drawings ····· 176

7 APPENDICES 179

7.1 Appendix 1 Data Code List ····· 179
7.2 Appendix 2 List of Parameters Classified by Purposes of Use ····· 185
7.3 Appendix 2 List of Parameters Classified by Purposes of Use ····· 185

CHAPTER 1

OUTLINE

This chapter gives information on the basic "outline" of this product.
Always read the instructions in this chapter before using the equipment.

1.1 Pre-Operation Information ····· 1
1.2 Basic Configuration ····· 2
1.3 Structure ····· 3

<Abbreviations>

- DU
  Operation panel (FR-DU04)
- PU
  Operation panel (FR-DU04) and parameter unit (FR-PU04)
- Inverter
  Mitsubishi Large Capacity inverter FR-A500L series
- FR-A500L
  Mitsubishi Large Capacity inverter FR-A500L series
- Pr.
  Parameter number
- PU operation
  Operation using the PU (FR-DU04/FR-PU04)
- External operation
  Operation using the control circuit signals
- Combined operation
  Operation using both the PU (FR-DU04/FR-PU04) and external operation
- MT-A100E
  Mitsubishi large capacity inverter MT-A100 series <EXCELLENT> series

1.1 Pre-Operation Information

OUTLINE

1.1.1 Precautions for operation

Incorrect handling might cause the inverter to operate improperly, its life to be reduced considerably, or at the worst, the inverter to be damaged. Handle the inverter properly in accordance with the information in each section as well as the precautions and instructions of this manual to use it correctly.
This manual is written for the FR-A500L series large capacity inverters.
For handling information on the parameter unit (FR-PU04), inboard options, stand-alone options, etc., refer to the corresponding manuals.

(1) Unpacking and product check

Unpack the inverter and check the capacity plate on the front cover and the rating plate on the inverter side face to ensure that the product agrees with your order and the inverter is intact.

1) Inverter type

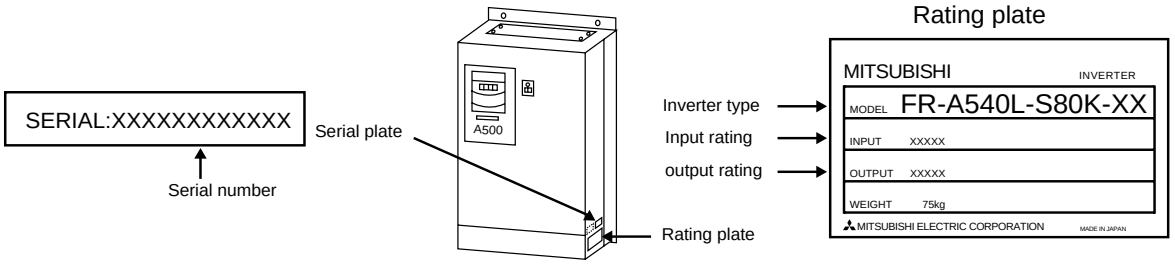

FR- A540L - S80K -

Symbol	Voltage Class
A540L	400V class

Symbol	Type
S60K to S375K	Indicates Inverter type

Symbol	Specifications
NA	U.S. specifications
EC	European specifications
E1	European specifications With double coating
CH	Chinese specification
(Null)	Others

2) Accessory
Instruction manual, DC reactor (DCL)

If you have found any discrepancy, damage, etc., please contact your sales representative.

(2) Preparations of instruments and parts required for operation

Instruments and parts to be prepared depend on how the inverter is operated. Prepare equipment and parts as necessary. (Refer to page 28.)

(3) Installation

To operate the inverter with high performance for a long time, install the inverter in a proper place, in a correct direction, and with proper clearances. (Refer to page 6.)

(4) Wiring

Connect the power supply, motor and operation signals (control signals) to the terminal block. Note that incorrect connection may damage the inverter and peripheral devices. (See page 8.)

- The control board (CA-Board) of this inverter unit FR-A500L is different from the control board using for FR-A500 (less than 55 k). Be careful because it is not the same software.

1.2 Basic Configuration

1.2.1 Basic configuration

The following devices are required to operate the inverter. Proper peripheral devices must be selected and correct connections made to ensure proper operation. Incorrect system configuration and connections can cause the inverter to operate improperly, its life to be reduced considerably, and in the worst case, the inverter to be damaged.

Please handle the inverter properly in accordance with the information in each section as well as the precautions and instructions of this manual. (For connections of the peripheral devices, refer to the corresponding manuals.)

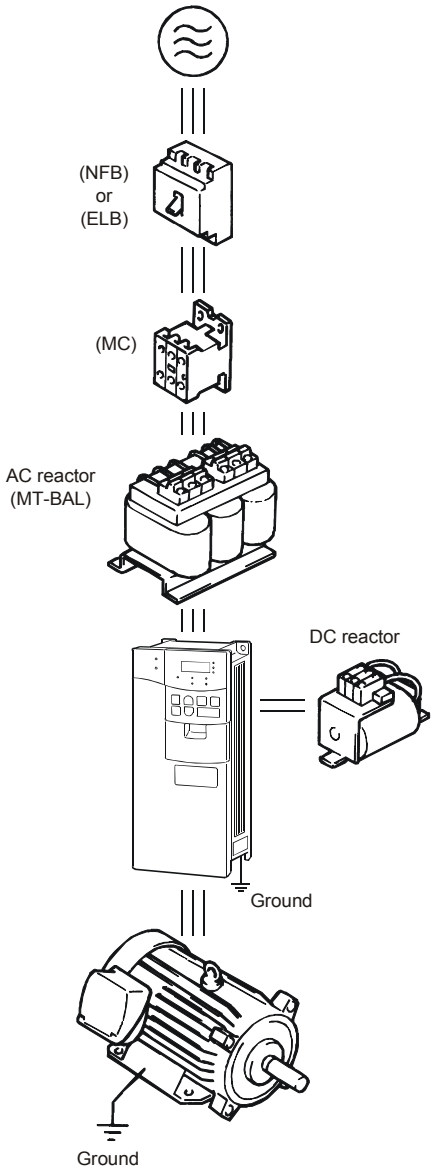

Name	Description
Power supply	Use the power supply within the permissible power supply specifications of the inverter. (Refer to page 22.)
Earth leakage circuit breaker (ELB) or no-fuse breaker (NFB)	The breaker should be selected with care since a large inrush current flows in the inverter at power on. (Refer to page 22.) The breaker must have overcurrent protection and earth leakage protection.
Magnetic contactor	The magnetic contactor need not be provided. When installed, do not use it to start or stop the inverter. It might reduce the inverter life. (Refer to page 22.)
Reactors	The reactors must be used when the power factor is to be improved or the inverter is installed near a large power supply system (1000KVA or more and wiring distance within 10m (32.81 feet)). Make selection carefully.
Inverter	• The inverter life is influenced by ambient temperature. The ambient temperature should be as low as possible within the permissible range. This must be noted especially when the inverter is installed in an enclosure. (Refer to page 6.) • Incorrect wiring might lead to inverter damage. The control signal lines must be kept fully away from the main circuit to protect them from noise. (Refer to page 8.)
Devices connected to the output	Do not connect a power capacitor, surge suppressor or radio noise filter to the output side.
Ground	To prevent an electric shock, always ground the motor and inverter.

1.3 Structure

1.3.1 Appearance and structure

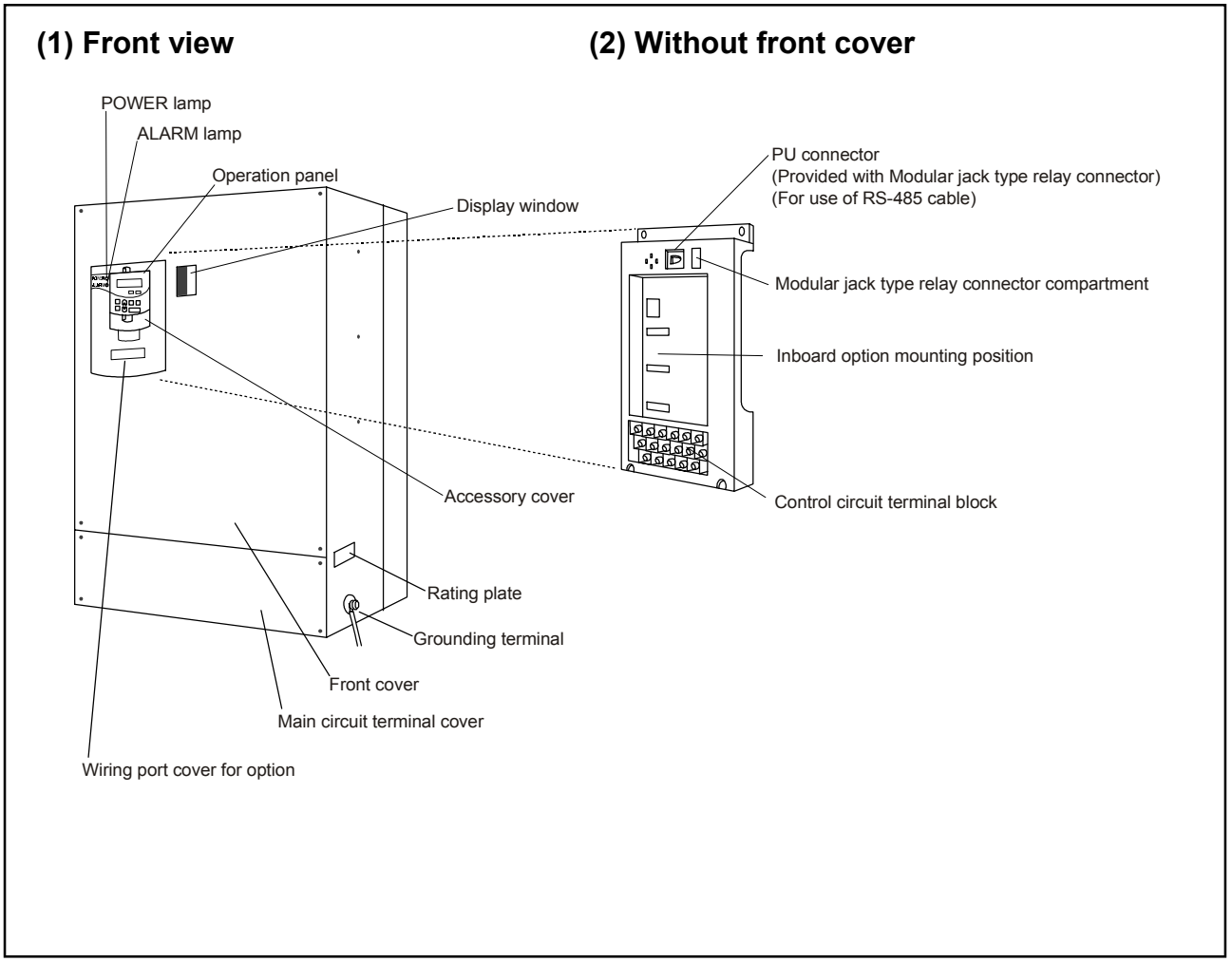

1.3.2 Removal and reinstallation of the front cover

• Removal

1) Remove the installation screw for the main circuit terminal cover.

2) Remove the front cover mounting screws.

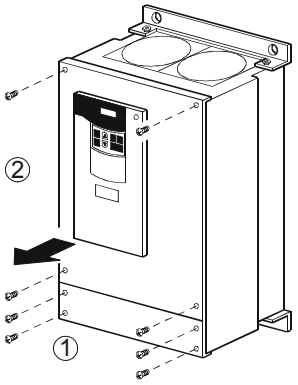

• Reinstallation

1) Fix the front cover with the mounting screws.

2) Fix the main circuit terminal cover with the installation screw.

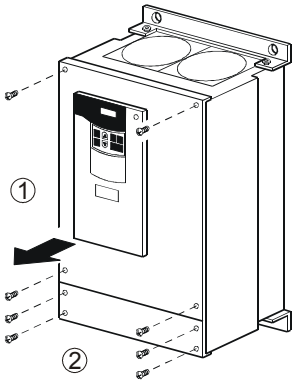

Note: 1. Confirm that the front cover and main circuit terminal cover have been securely installed.

1.3.3 Removal and reinstallation of the operation panel

To ensure safety, remove and reinstall the operation panel after switching power off.

- **Removal**

  Hold down the top button of the operation panel and pull the operation panel toward you to remove.

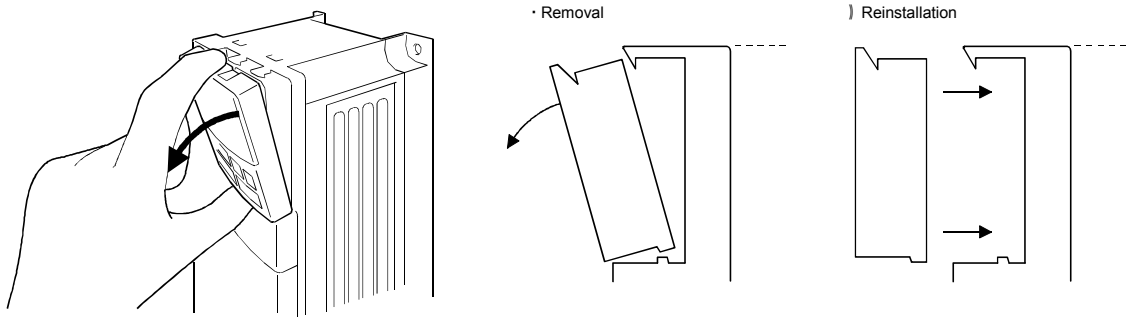

  To reinstall, insert straight and mount securely.

- **Reinstallation using the connection cable**

  1) Remove the operation panel.
  2) Disconnect the modular jack type relay connector. (Place the disconnected modular jack type relay connector in the modular jack type relay connector compartment.)

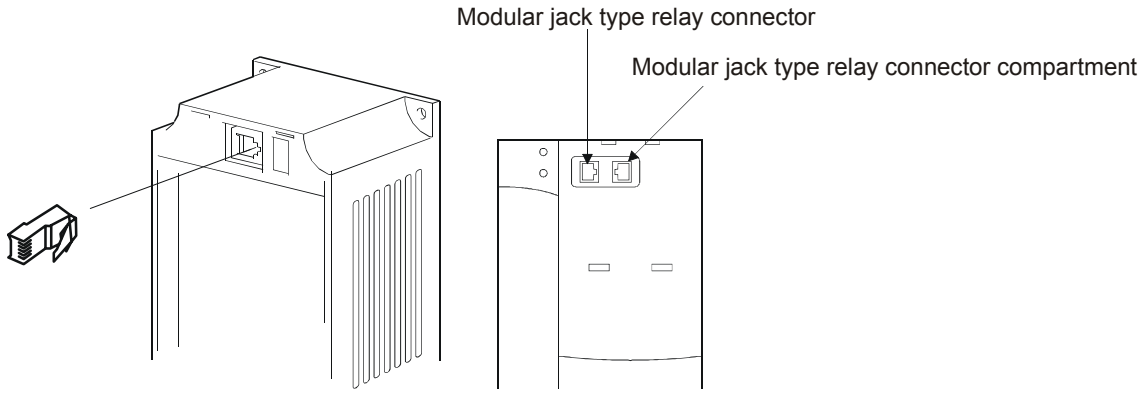

  3) Securely plug one end of the connection cable into the PU connector (modular jack type relay connector) of the inverter and the other end into the operation panel. (Refer to page 19)

Note: Install the operation panel only when the front cover is on the inverter.

CHAPTER 2

INSTALLATION AND WIRING

This chapter gives information on the basic "installation and wiring" of this product.
Always read the instructions in this chapter before using the equipment.

2.1 Installation ····· 6
2.2 Wiring ····· 8
2.3 Other wiring ····· 24

2.1 Installation

2.1.1 Instructions for installation

1) Handle the unit carefully.
   The inverter uses plastic parts. Handle it gently to protect it from damage. Also, hold the unit with even strength and do not apply too much strength to the front cover alone.

2) Install the inverter where it is not subjected to vibration.
   Note the vibration of a cart, press, etc.

3) Note on ambient temperature
   The inverter life is under great influence of ambient temperature. In the place of installation, ambient temperature must be within the permissible range (-10°C to +40°C (14°F to 104°F)). Check that the ambient temperature is within that range in the positions shown in figure 3).

4) Install the inverter on a non-combustible surface.
   The inverter will be very hot (maximum. about 150°C (302°F)). Install it on a non-combustible surface (e.g. metal). Also leave sufficient clearances around the inverter.

5) Avoid high temperature and high humidity.
   Avoid places where the inverter is subjected to direct sunlight, high temperature and high humidity.

6) The amount of heat generated in an enclosure can be reduced considerably by placing the heat sink outside the enclosure.

Note: The cooling section outside the enclosure has the cooling fan. Do not use the inverter in any environment where it is exposed to waterdrops, oil mist, dust, etc.

7) Avoid places where the inverter is exposed to oil mist, flammable gases, fluff, dust, dirt, etc.
   Install the inverter in a clean place or inside a "totally enclosed" panel which does not accept any suspended matter.

8) Note the cooling method when the inverter is installed in an enclosure.
   When a ventilation fan is mounted in an enclosure, the inverters and ventilation fan must be installed in proper positions with extreme care taken to keep the ambient temperatures of the inverters below the permissible value. If they are installed in improper positions, the ambient temperatures of the inverters will rise and ventilation effect will reduce.

9) Secure the inverter with bolts vertically.
   Install the inverter on an installation surface securely and vertically with screws or bolts.

3) Note on ambient temperatures

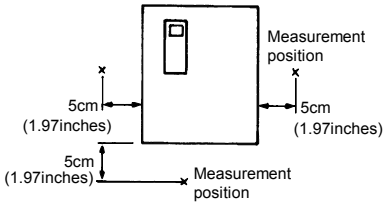

4) Clearances around the inverter

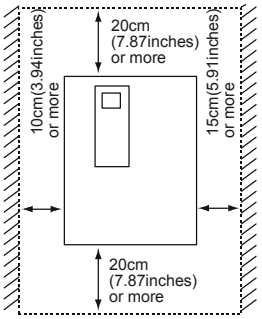

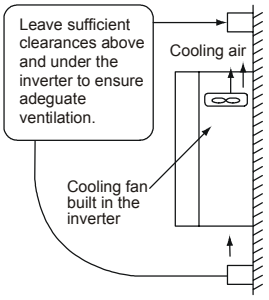

8) For installation in enclosure

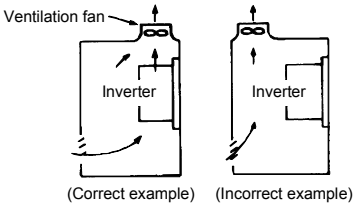

Position of Ventilation Fan

9) Vertical mounting

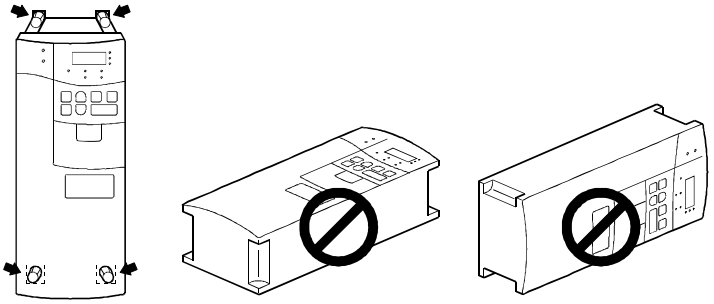

2.2 Wiring

2.2.1 Terminal connection diagram

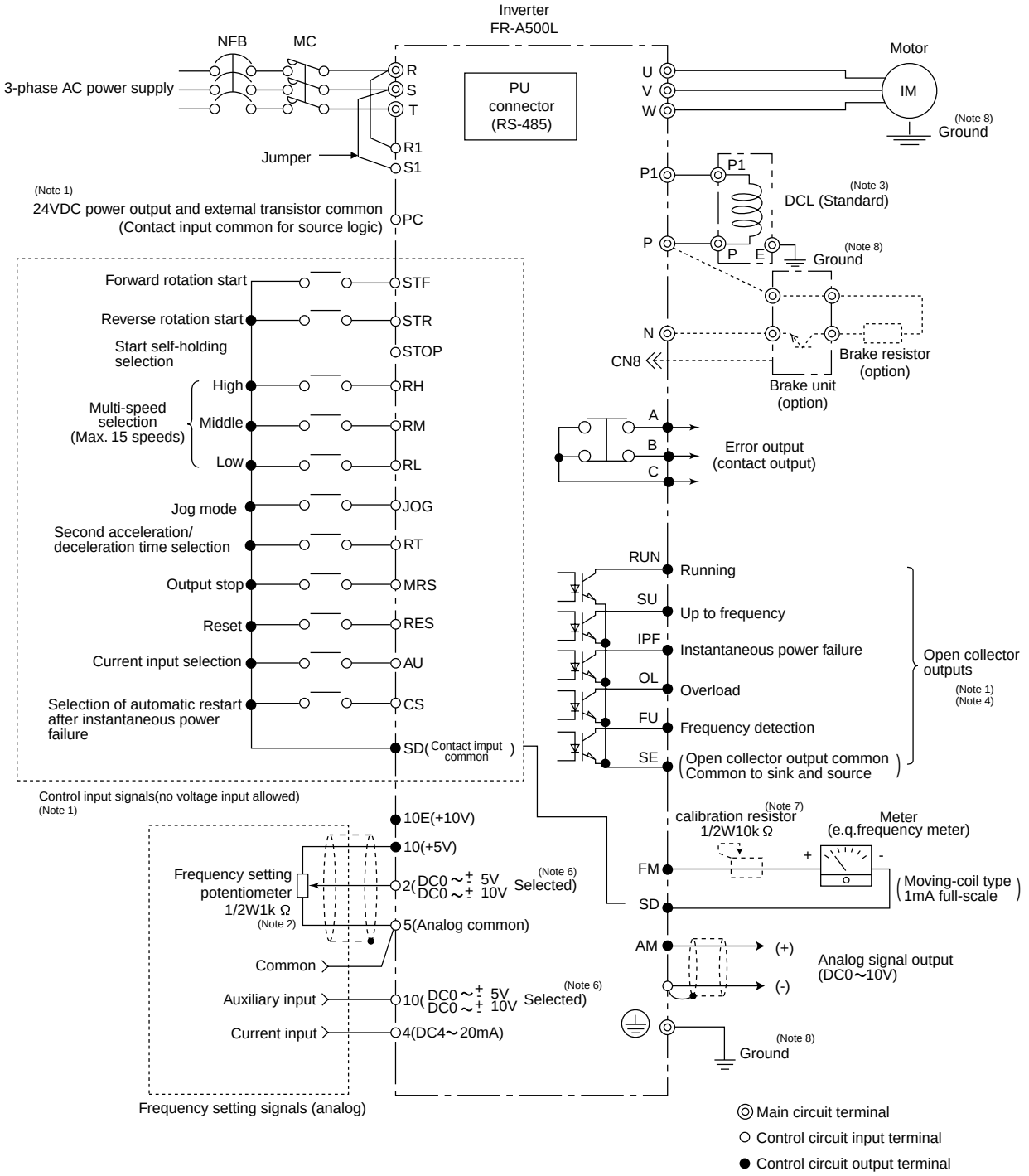

Notes

(1) This connection diagram shows the example for the sink logic (factory-set) control circuit. When using the source logic, refer to page 15 for the connections.

(2) Use of the 2W1kΩ is recommended when the frequency setting is changed frequently.

(3) Always connect the enclosed DCL.

(4) The output terminal can output the error alarm code, and 26 types of functions can be independently assigned with Pr. 190 to 195.

(5) Ambient temperature must be within the permissible range (-10℃ to +40℃ (14℉ to 104℉)).

(6) The input signal can be changed over with Pr.73.

(7) This is not required when the scale is calibrated with the operation panel.

(8) Always ground the inverter unit, DCL and motor.

(1) Description of main circuit terminals

Type	Symbol	Terminal Name	Description
Main circuit	R, S, T <L_1, L_2, L_3>	AC power input	Connect to the commercial power supply.
	U, V, W	Inverter output	Connect a three-phase squirrel-cage motor.
	R1, S1 <L_{11}, L_{21}>	Power supply for control circuit	Connected to the AC power supply terminals R and S. To retain the alarm display and alarm output or when using the high power factor converter (MT-HC), remove the jumpers from terminals R-R1 and S-S1 and apply external power to these terminals.
	P, N <+,->	Brake unit connection	Connect the optional MT-BU5 brake unit, power return converter (MT-RC) or high power factor converter (MT-HC).
	P, P1 <+, P1>	Power factor improving DC reactor connection	Connect DC reactor.
	⏚	Ground	For grounding the inverter chassis. Must be earthed.

Note:< >Terminal names in parentheses are those of the EC, EI version.

(2) Description of control circuit terminals

Type		Symbol	Terminal Name	Description	
Input signals	Contacts, e.g. start, function setting	STF	Forward rotation start	Turn on the STF signal to start forward rotation and turn it off to stop. Acts as a programmed operation start signal in the programmed operation mode. (Turn on to start and turn off to stop.)	When the STF and STR signals are turned on simultaneously, the stop command is given.
		STR	Reverse rotation start	Turn on the STR signal to start reverse rotation and turn it off to stop.	
		STOP	Start self-holding selection	Turn on the STOP signal to select the self-holding of the start signal.	
		RH, RM, RL	Multi-speed selection	Use the RH, RM and RL signals as appropriate to select multiple speeds.	Input terminal function selection (Pr. 180 to Pr. 186) change terminal functions.
		JOG	JOG mode selection	Turn on the JOG signal to select jog operation (factory setting). Jog operation can be performed with the start signal (STF or STR).	
		RT	Second acceleration/ deceleration time selection	Turn on the RT signal to select the second acceleration/ deceleration time. When the second functions such as "second torque boost" and "second V/F (base frequency)" functions have been set, these functions can also be selected by turning on the RT signal.	
		MRS	Output stop	Turn on the MRS signal (20ms or longer) to stop the inverter output. Used to shut off the inverter output to bring the motor to a stop by the magnetic brake.	
		RES	Reset	Used to reset the protective circuit activated. Turn on the RES signal for more than 0.1 sec, then turn it off.	
		AU	Current input selection	Only when the AU signal is turned on, the inverter can be operated with the 4-20mADC frequency setting signal.	Input terminal function selection (Pr. 180 to Pr. 186) change terminal functions.
		CS	Automatic restart after instantaneous power failure selection	With the CS signal on, restart can be made automatically when the power is restored after an instantaneous power failure. Note that this operation requires restart parameters to be set. When the inverter is shipped from the factory, it is set to disallow restart.	
		SD	Contact input common (sink)	Common terminal for the terminal FM. Common output terminal for 24VDC 0.1A power (PC terminal).	
		PC	24VDC power and external transistor common Contact input common (source)	When transistor output (open collector output), such as a programmable controller, is connected, connect the external power supply common for transistor output to this terminal to prevent a fault caused by leakage current. This terminal can be used as a 24VDC, 0.1A power output. When source logic has been selected, this terminal serves as a contact input common.	

Type		Symbol	Terminal Name	Description	
Input signals	Analog frequency setting	10E	Frequency setting power supply	10VDC, permissible load current 10mA	When the frequency setting potentiometer is connected in the factory-set state, connect it to terminal 10. When it is connected to terminal 10E, change the input specifications of terminal 2.
		10		5VDC, permissible load current 10mA	
		2	Frequency setting (voltage)	By entering 0 to 5VDC (0 to 10VDC), the maximum output frequency is reached at 5V (or 10V) and I/O are proportional. Switch between input 0 to 5VDC (factory setting) and 0 to 10VDC from operation terminal. Input resistance 10kΩ. Maximum permissible voltage 20V.	
		4	Frequency setting (current)	By entering 4 to 20mADC, the maximum output frequency is reached at 20mA and I/O are proportional. This input signal is valid only when the AU signal is on. Input resistance 250Ω. Maximum permissible current 30mA.	
		1	Auxiliary frequency setting	By entering 0 to ±5VDC 0 to ±10VDC, this signal is added to the frequency setting signal of terminal 2 or 4. Switch between input 0 to ±5VDC and 0 to ±10VDC (factory setting) from operation terminal. Input resistance 10kΩ. Maximum permissible voltage ±20V.	
		5	Frequency setting input common	Common to the frequency setting signal (terminal 2, 1 or 4) and analog output terminal AM. Do not earth.	
Output signals	Contact	A, B, C	Alarm output	Change-over contact output indicating that the output has been stopped by the inverter protective function activated. 200VAC 0.3A, 30VDC 0.3A. Alarm: discontinuity across B-C (continuity across A-C), normal: continuity across B-C (discontinuity across A-C).	Output terminal function selection (Pr. 190 to Pr. 195) change terminal functions.
	Open collector	RUN	Inverter running	Switched low when the inverter output frequency is equal to or higher than the starting frequency (factory set to 0.5Hz, variable). Switched high during stop or DC dynamic brake operation(note1) Permissible load 24VDC 0.1A.	
		SU	Up to frequency	Switched low when the output frequency has reached within ±10% of the set frequency (factory setting, variable). Switched high during acceleration, deceleration or stop(note 1). Permissible load 24VDC 0.1A.	
		OL	Overload alarm	Switched low when the stall prevention function has caused stall prevention to be activated. Switched high when stall prevention is reset(note 1). Permissible load 24VDC 0.1A.	
		IPF	Instantaneous power failure	Switched low when instantaneous power failure or undervoltage protection is activated(note 1). Permissible load 24VDC 0.1A.	
		FU	Frequency detection	Switched low when the output frequency has reached or exceeded the detection frequency set as appropriate. Switched high when below the detection frequency(note 1). Permissible load 24VDC 0.1A	
		SE	Open collector output common	Common to the RUN, SU, OL, IPF and FU terminals.	
	Pulse	FM	For meter	One selected from 16 monitoring items, such as output frequency, is output(note 2). The output signal is proportional to the magnitude of each monitoring item.	Factory setting of output item: Frequency Permissible load current 1mA 1440 pulses/second. at 60Hz
	Analog	AM	Analog signal output		Factory setting of output item: Frequency Output signal 0 to 10VDC Permissible load current 1mA
Communication	RS485	——	PU connector	With the operation panel connector, communication can be made through RS-485. ・Conforming Standard : EIA Standard RS-485 ・Transmission format : Multi-drop link ・Communication speed : Maximum 19200 baud rates ・Overall length : 500m	

Note1: Low indicates that the open collector outputting transistor is on (conducts). High indicates that the transistor is off (does not conduct).

Note2: Not output while the inverter is reset.

2.2.2 Wiring of the main circuit

(1) Wiring instructions

1) Power must not be applied to the output terminals (U, V, W) of the inverter. Otherwise the inverter will be damaged.
2) After wiring, wire off-cuts must not be left in the inverter.
   Wire off-cuts can cause an alarm, failure or malfunction. Always keep the inverter clean.
3) Use thick cables to make a voltage drop of 2% or less.
   If the wiring distance is long between the inverter and motor, a main circuit cable voltage drop will cause the motor torque to decrease especially at the output of a low frequency.
4) Electromagnetic wave interference
   The input/output (main circuit) of the inverter includes harmonic components, which may interfere with the communication devices (such as AM radios) used near the inverter. In this case, install the FR-BIF optional radio noise filter (for use in the input side only) or FR-BLF line noise filter to minimize interference.
5) Do not install a power capacitor, surge suppressor or radio noise filter (FR-BIF option) in the output side of the inverter.
   This will cause the inverter to trip or the capacitor and surge suppressor to be damaged. If any of the above devices are installed, immediately remove them. (Connect the FR-BIF optional radio noise filter in the input side.)
6) When rewiring after operation, make sure that the POWER lamp has gone off, and when more than 10 minutes have elapsed after power-off, check with a tester that the voltage is zero. After that, start rewiring work. For some time after power-off, there is a dangerous voltage in the capacitor.

⚠ CAUTION

⚠ **Do not use residual current protective device as the only protection against indirect contact.**
Protective earth connection essential.

⚠ **Do not connect more than 2 wires on the protective earth terminal.**

⚠ **Use contactor and no fuse breaker EN/IEC standard compliant.**

⚠ **Use transformer or surge absorber EN/IEC standard compliant.**

Notes on Grounding

- Leakage currents flow in the inverter. To prevent an electric shock, the inverter and motor must be grounded (class C grounding, grounding resistance 10Ω or less.)
- Use the dedicated ground terminal to ground the inverter. (Do not use the screw in the case, chassis, etc.)
- The ground cable should be 38mm^2 or more thick, and as short as possible. The grounding point should be as close to the inverter as possible.

(2) Terminal block layout

In the main circuit of the inverter, the terminals are arranged as shown below:

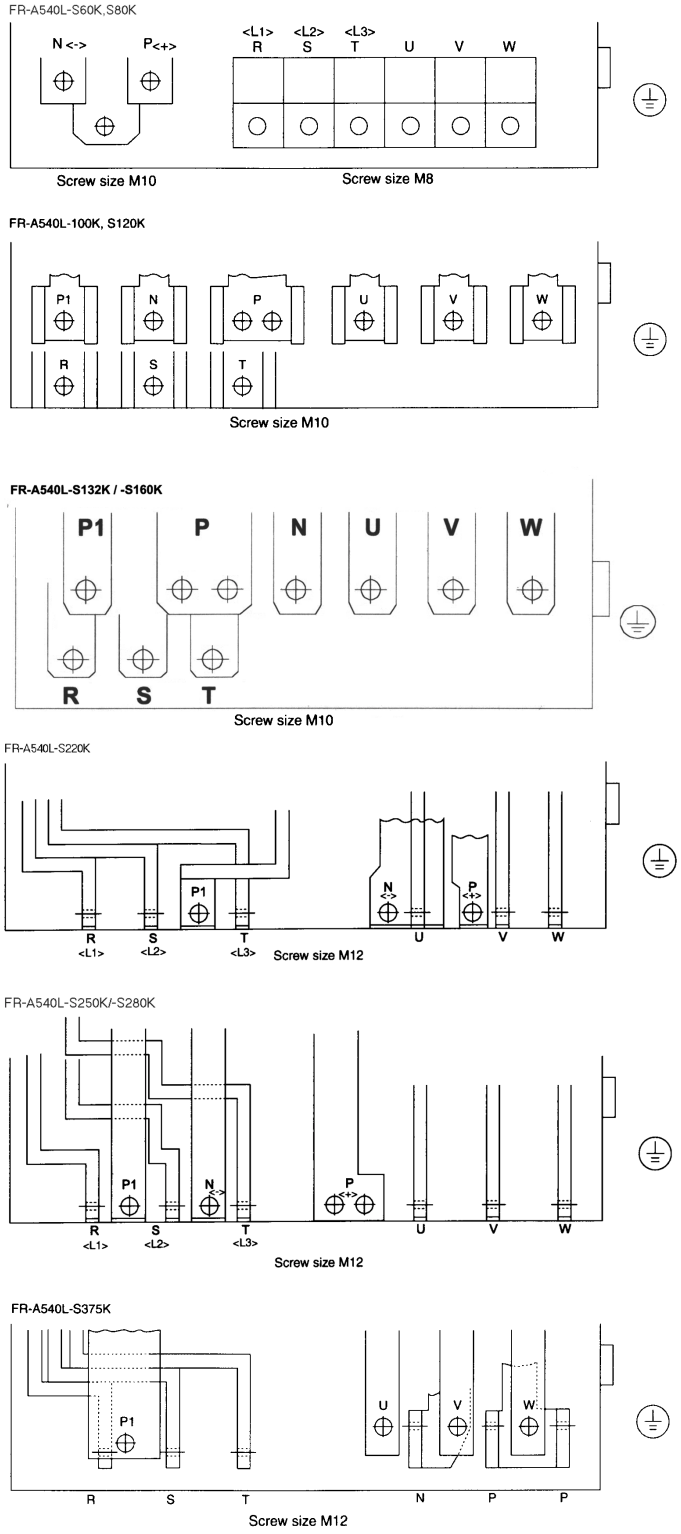

(4) Cables, crimping terminals, etc.

The following table lists the cables and crimping terminals used with the inputs (R, S, T) and outputs (U, V, W) of the inverter and the torques for tightening the screws:

For A540L, 400V class DRIVE

Applicable Inverter Type	Terminal Screw Size	Tightening Torque Kgfcm(Nm)	Crimping Terminals R,S,T (L1,L2,L3)	U,V,W	Cables					
					mm2		AWG		PVC	
					R,S,T (L1,L2,L3)	U,V,W	R,S,T (L1,L2,L3)	U,V,W	R,S,T (L1,L2,L3)	U,V,W
FR-A540L-S60K	M10	270 (26.48)	60-10	60-10	60	60	1/0	1/0	70	70
FR-A540L-S80K	M10	270 (26.48)	60-10	60-10	60	60	1/0	1/0	95	95
FR-A540L-S100K	M10	270 (26.48)	80-10	80-10	80	80	3/0	3/0	95	120
FR-A540L-S120K	M10	270 (26.48)	100-10	100-10	100	100	4/0	4/0	150	185
FR-A540L-S132K	M10	270 (26.48)	125-10	125-10	100	100	4/0	4/0	150	185
FR-A540L-S160K	M10	270 (26.48)	125-10	125-10	125	125	5/0	5/0	185	2*170
FR-A540L-S220K	M12	470 (46.09)	100-12	100-12	2*100	2*100	2*4/0	2*4/0	2*95	2*120
FR-A540L-S250K	M12	470 (46.09)	125-12	125-12	2*125	2*125	2*MCM250	2*MCM250	2*150	2*185
FR-A540L-S280K	M12	470 (46.09)	125-12	125-12	2*125	2*125	2*MCM250	2*MCM250	2*150	2*185
FR-A540L-S375K	M12	470 (46.09)	150-12	150-12	2*150	2*150	2* MCM300	2*MCM300	—	—

Note: 1. The cables used should be 75°C (167°F) copper cables.
2. Tighten the terminal screws to the specified torques.
Undertightening can cause a short or misoperation.
Overtightening can cause the screws and unit to be damaged, resulting in a short or misoperation.
3. EC version: Recommended wire size for following conditions.
•Ambient Temp.: 40°C maximum
•Wire installation: On wall without ducts or conduits with single core PVC cable.
If conditions are different from above, select appropriate wire according to EN60204 ANNEX C TABLE 5 or IEC 364-5-523 : 1983.

(5) Connection of the power supply and motor

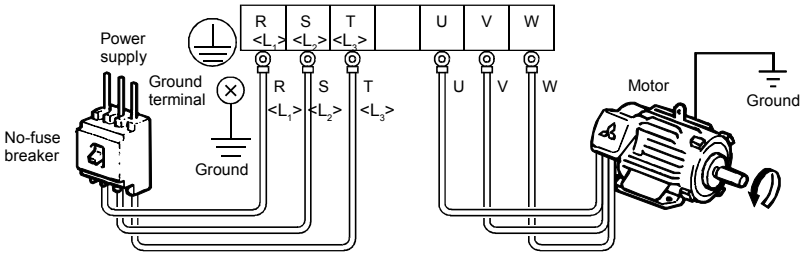

The power supply cables must be connected to R, S, T<L_1, L_2, L_3>, If they are connected to U, V, W, the inverter will be damaged.

Connect the motor to U, V, W, In the above connection, turning on the forward rotation switch (signal) rotates the motor in the counterclockwise (arrow) direction when viewed from the load shaft.

Note: Motor overload protection must be provided in accordance with National Electrical Code for Compliance with UL and CSA standards.

(6) Connecting the control circuit to a power supply separately from the main circuit

If the magnetic contactor (MC) in the inverter power supply is opened when the protective circuit is operated, the inverter control circuit power is lost and the alarm output signal cannot be kept on. To keep the alarm signal on terminals R1 and S1 are available. In this case, connect the power supply terminals R1 and S1 <L_{11} and L_{21}> of the control circuit to the primary side of the MC.

<Connection procedure>

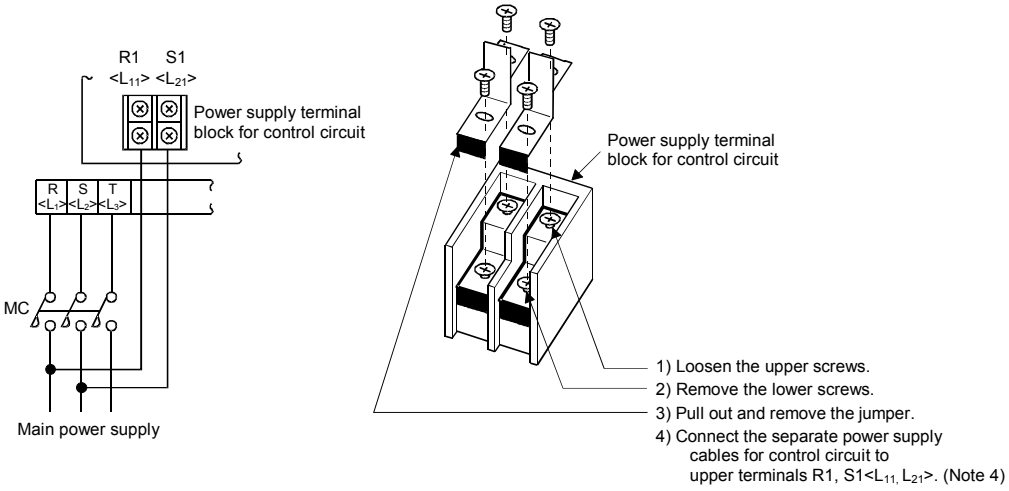

Note:
1. When the main circuit power (R, S, T) <L_1, L_2, L_3,> is on, do not switch off the control power (terminals R1, S1<L_{11}, L_{21}>). Otherwise the inverter may be damaged.
2. When using a separate power supply, the jumpers across R-R1 and S-S1 <L_1-L_{11} and L_2-L_{21}>must be removed. Otherwise the inverter may be damaged.
3. For a different power supply system which takes the power of the control circuit from other than the primary side of the MC, the voltage should be equal to the main circuit voltage.
4. The power supply cables must not be connected to the lower terminals. If connected, the inverter may be damaged.

2.2.3 Wiring of the control circuit

(1) Wiring instructions

1) Terminals SD, SE and 5 are common to the I/O signals and isolated from each other. These common terminals must not be connected to each other or earthed.
2) Use shielded or twisted cables for connection to the control circuit terminals and run them away from the main and power circuits (including the 200V relay sequence circuit).
3) The frequency input signals to the control circuit are micro currents. When contacts are required, use two or more parallel micro signal contacts or a twin contact to prevent a contact fault.
4) It is recommended to use the cables of 0.75mm^2 gauge for connection to the control circuit terminals.
   If the cable gauge used is 1.25mm^2 or more, the front cover may be lifted when there are many cables running or the cables are run improperly, resulting in an operation panel or parameter unit contact fault.

(2) Terminal block layout

● NA version

In the control circuit of the inverter, the terminals are arranged as shown below:
Terminal screw size: M3.5

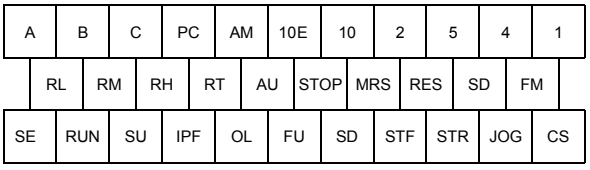

● EC version

Terminal screw size : M3

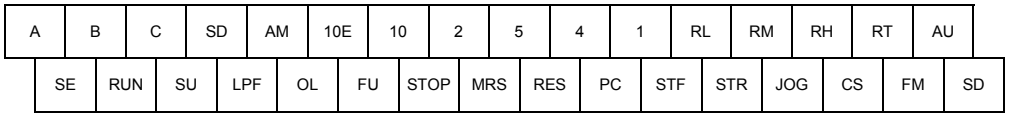

<Wiring procedure>

1) For the wiring of the control circuit, strip the sheaths of the cables and use them as they are.
   Strip the sheath to the following dimension. If too much is stripped this may cause a short circuit with the neighboring cable. If too little stripped this may cause cable disconnection.

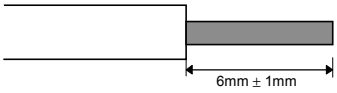

2) Loosen the terminal screw and insert the cable into the terminal.
3) Tighten the screw to the specified torque.
   Undertigthening can cause cable disconnection or malfunction. Overtightening can cause a short circuit or malfunction due to the screw or unit damaged.

Tightening torque : 5 to 6 kgf・cm

Note : Wire the stripped cable by twisting it to prevent it from becoming loose. (Do not plate the cable with solder.)

Note : 1. Use a NFB (No fuse breakers) or fuse on the inverter input (primary) side.
2. Make sure that the control circuit terminal wiring does not touch power circuit terminals (or screws) or conducting power circuit.

(3) Changing the control logic

The input signals are set to sink logic for the NA version, and to source logic for the EC version.
To change the control logic, the connector on the back of the control circuit terminal block must be moved to the other position.
(The output signals may be used in either the sink or source logic independently of the connector position.)

1) Loosen the two mounting screws in both ends of the control circuit terminal block. (The screws cannot be removed.)
   With both hands, pull down the terminal block from the back of the control circuit terminals.

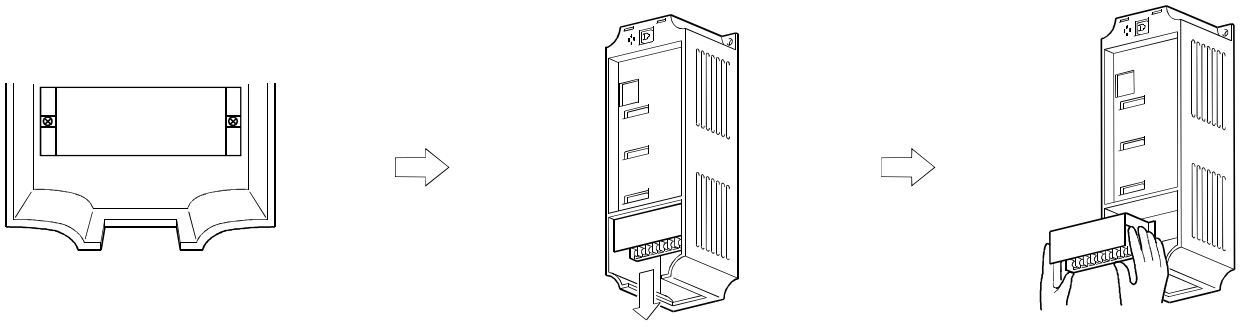

2) Remove the connector in the sink logic position on the back surface of the control circuit terminal block and fit it to the source logic position.

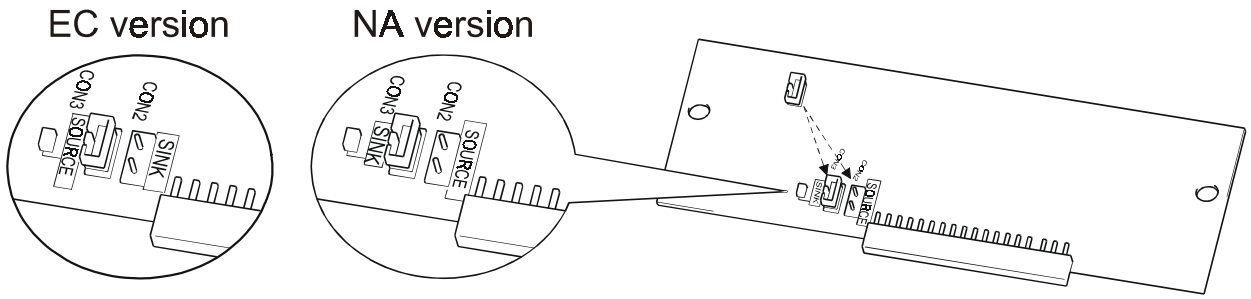

3) Using care not to bend the pins of the control circuit connector, reinstall the control circuit terminal block and fix it with the mounting screws.

Note: 1. Make sure that the control circuit connector is fitted correctly.
2. While power is on, never disconnect the control circuit terminal block.
3. The sink-source logic change-over connector must be fitted in only one of those positions. If it is fitted in both positions at the same time, the inverter may be damaged.

4) Sink logic type

- In this logic, a signal switches on when a current flows out of the corresponding signal input terminal. Terminal SD is common to the contact input signals. Terminal SE is common to the open collector output signals.

Ex. A current flows out of the corresponding signal RUN.

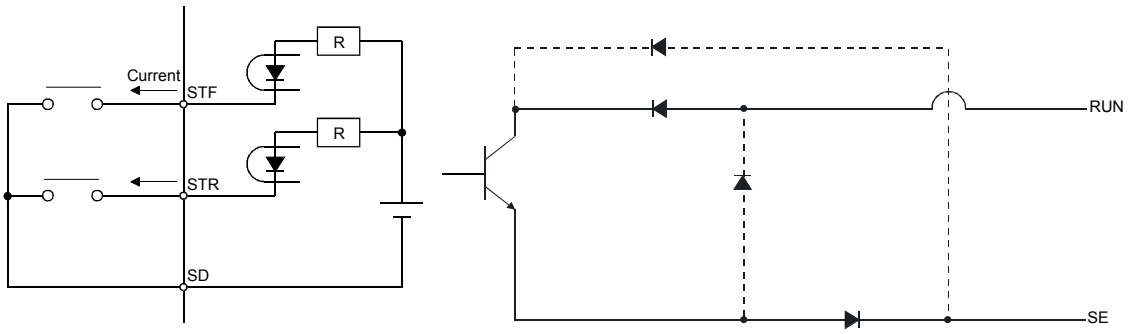

- When using an external power supply for transistor output, use terminal PC as a common to prevent misoperation caused by leakage current. (Do not connect terminal SD of the inverter with terminal 0V of the external power supply.)

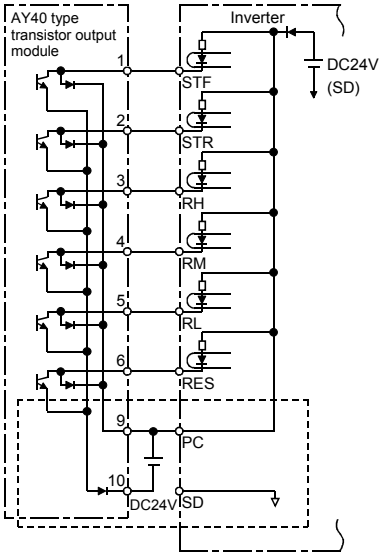

5) Source logic type

- In this logic, a signal switches on when a current flows into the corresponding signal input terminal. Terminal PC is common to the contact input signals. Terminal SE is common to the open collector output signals.

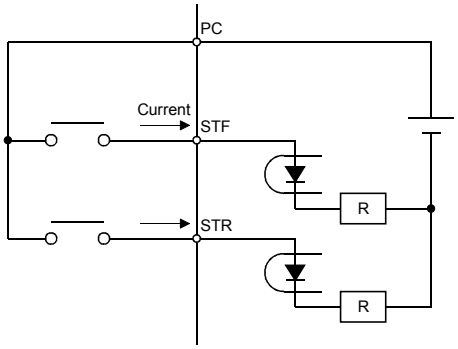

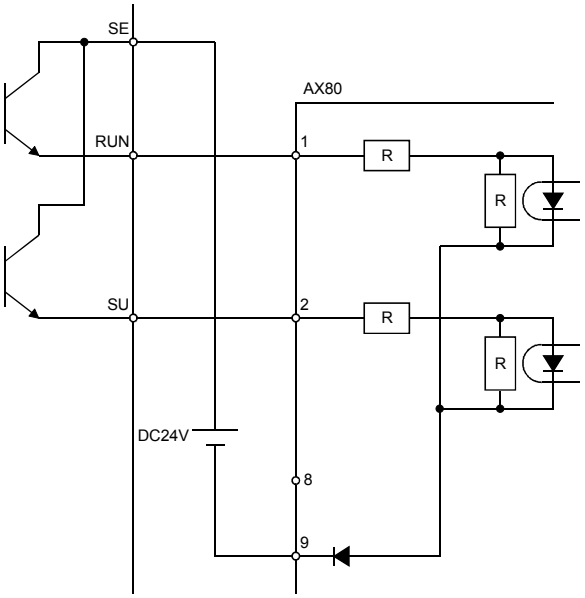

- When using an external power supply for transistor output, use terminal SD as a common to prevent misoperation caused by leakage current.

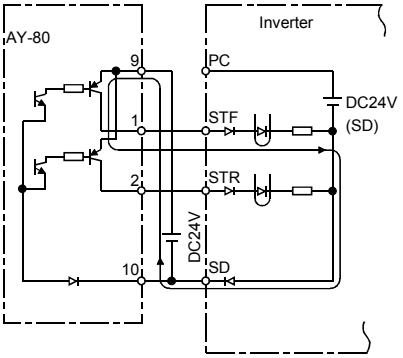

(4) How to use terminals "STOP", "CS" and "PC"

1) Using the "STOP" terminal
A connection example (for sink logic) for self-holding the start signal (forward rotation, reverse rotation) is shown on the right.

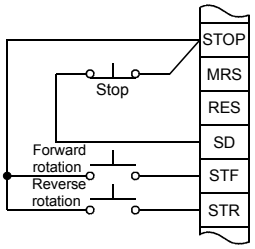

2) Using the "CS" terminal
This terminal is used to perform automatic restart after instantaneous power failure and commercial power supply-inverter switch-over operation.
<Example: Automatic restart after instantaneous power failure in sink logic>
Connect terminals CS-SD and set a value other than "9999" in Pr. 57 "coasting time for automatic restart after instantaneous power failure".

3) Using the "PC" terminal
This terminal can be used as 24VDC power output using SD as a common terminal.
Specifications: 18V to 26VDC, 0.1A permissible current
Note that the wiring length should be within 30m.
Do not short terminals PC-SD.
When terminal PC is used as a 24V power supply, leakage current from transistor output cannot be prevented.

2.2.4 Connection to the PU connector

(1) When connecting the operation panel or parameter unit using a connection cable

<Recommended cable connector>

- Parameter unit connection cable (FR-CB2) (option) or the following connector and cable.
- Connector: RJ45 connector
  Example: 5-554720-3, Nippon AMP
- Cable: Cable conforming to EIA568 (e.g. 10BASE-T cable)
  Example: SGLPEV 0.5mm×4P, MITSUBISHI CABLE INDUSTRIES, LTD.

Note: The maximum wiring length is 20m (65.62 feet).

(2) For RS-485 communication

With the operation panel disconnected, the PU connector can be used for communication operation from a personal computer etc.

<PU connector pin-outs>

Viewed from the inverter (receptacle side) front

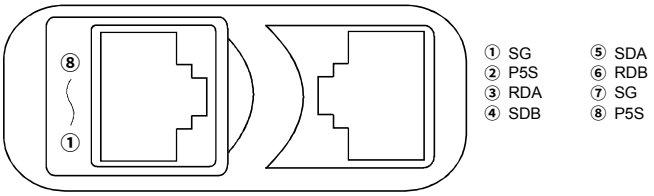

Note: 1. Do not connect the PU connector to the computer's LAN board, FAX modem socket or telephone modular connector. Otherwise, the product may be damaged due to electrical specification differences.
2. Pins 2 and 8 (P5S) provide power to the operation unit or parameter unit. Do not use these pins for RS-485 communication.

<System configuration example>

1) When a computer having a RS-485 interface is used with several inverters

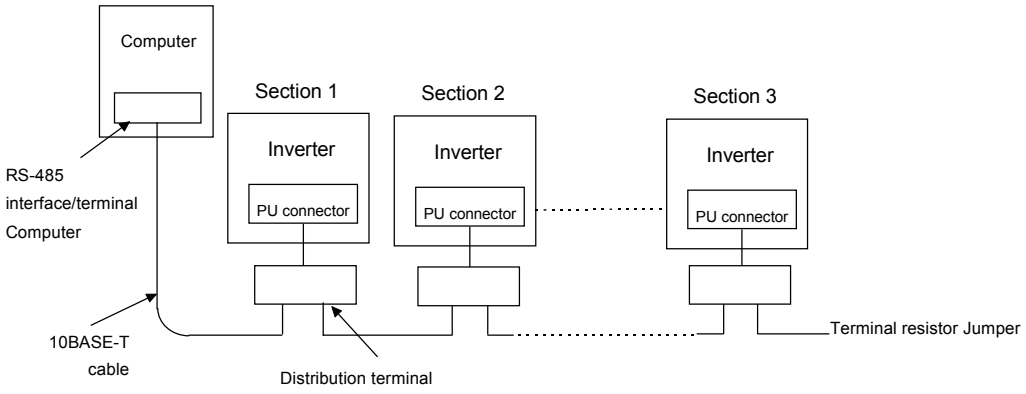

Note: Use the connector and cables which are available on the market.

- Connector : RJ45 connector

  Example : 5-554720-3, Nippon AMP Co., LTD.

- Cable : Cable conforming to EIA568B (such as 10BASE-T cable)

  Example: SGLPEV 0.5mm×4P, MITSUBISHI CABLE INDUSTRIES, LTD.

2) When a computer having a RS-232C interface is used with several inverters

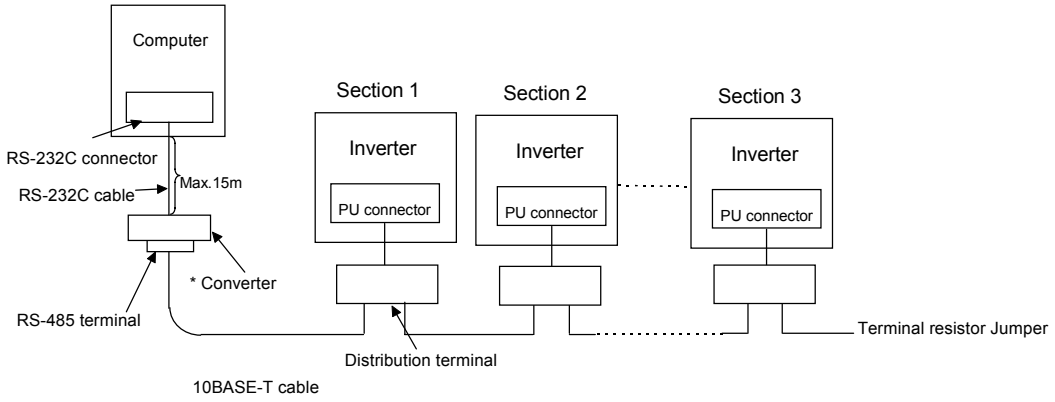

* Converter available on the market is required.

Note: Use the connector, cable and converter which are available on the market.

- Connector : RJ45 connector

  Example : Nippon AMP Co., LTD.

- Cable : Cable conforming to EIA568B (such as 10BASE-T cable)

  Example: SGLPEV 0.5mm×4P, MITSUBISHI CABLE INDUSTRIES, LTD.

- RS-485/RS232C converter

  Example: FA-T-RS40, Industrial System Div., Mitsubishi Electric Engineering Co., LTD.

  Or

  : Cable with built-in interface DAFXI-CAB series, Connector conversion cable DINV-485CAB, Dia Trend Co., LTD.

<wire method>

1) Wiring of one computer and one inverter

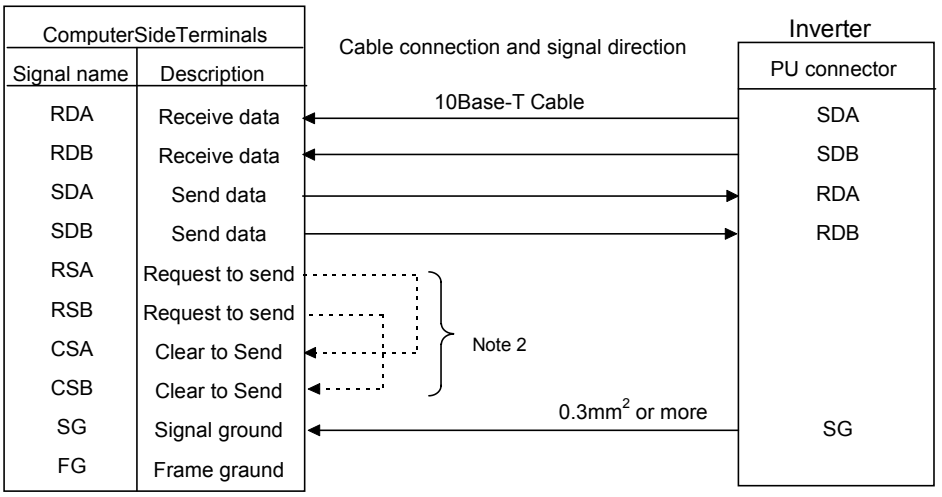

2) Wiring of one computer and "n" inverter (several inverter)

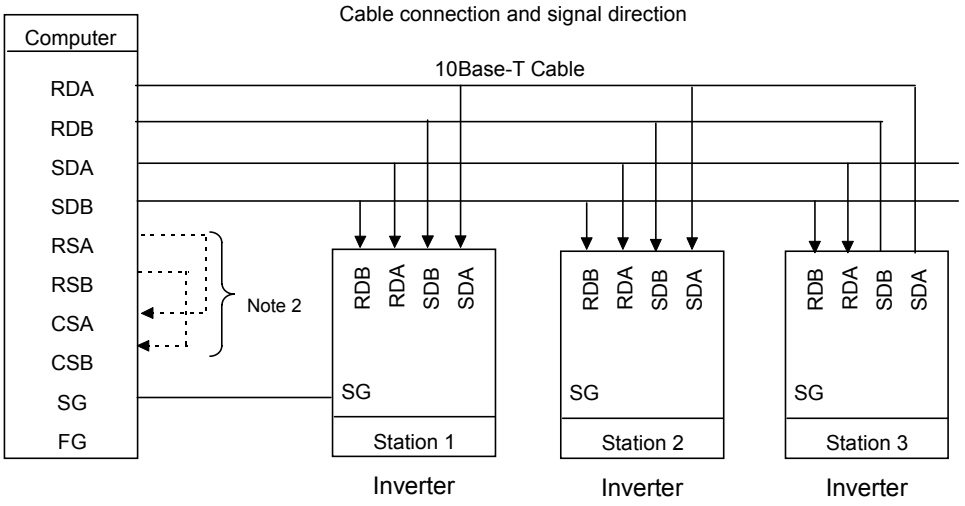

Note: 1. Connect the terminal resistor jumper only to the inverter remotest from the computer.
(Terminal resistor : 100Ω)
2. Make connections in accordance with the instruction manual of the computer used.
Fully check the terminal numbers of the computer as they differ between models.

2.2.5 Connection of stand-alone option units

The inverter accepts a variety of stand-alone option units as required.
Incorrect connection will cause inverter damage or accident. Connect and operate the option unit carefully in accordance with the corresponding option unit manual.

Connection of the MT-BU5 brake unit(option)

Connect the optional MT-BU5 brake unit as shown below to improve the braking capability during deceleration.

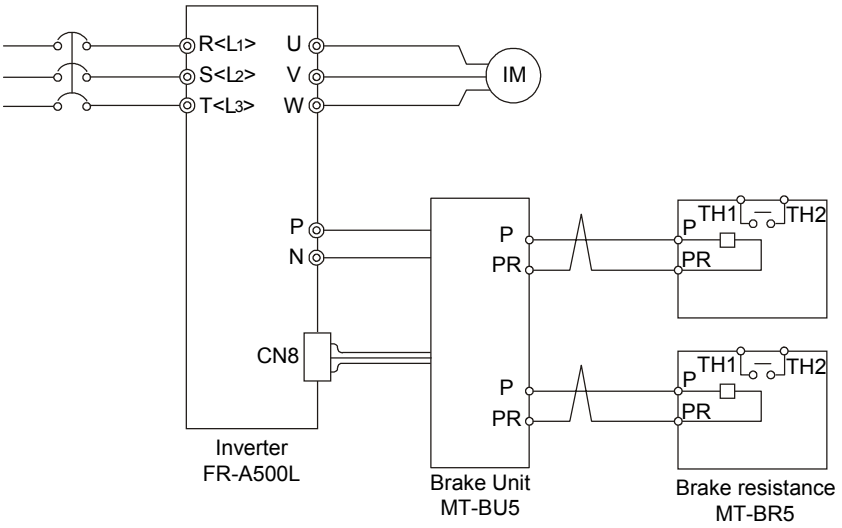

Note: 1. Install a brake unit within the range where attached cable reaches an inverter. And Install the brake unit in a well-ventilated area.

2. The cable length between brake unit and brake resistors is 10m or less for twist, or 5m or less for non-twist.

3. When connecting the brake unit to the inverter unit, be sure to use the electric cables supplied with the brake unit.

4. The main circuit wire is connected to the P and N terminals, and the control circuit wire is connected to the internal LL connector (CN8) after placing slits on the rubber bushing on the top of the inverter.

5.The brake unit that uses multiple brake resistors has the same number of terminals as the brake resistor unit. Connect the one brake resistor to one set of terminals (P, PR).

2.2.6 Design information

1) For commercial power supply-inverter switch-over operation, provide electrical and mechanical interlocks for MC1 and MC2 designed for commercial power supply-inverter switch-over.
   When there is a commercial power supply-inverter switch-over circuit as shown below, the inverter will be damaged by leakage current from the power supply due to arcs generated at the time of switch-over or chattering caused by a sequence error.
2) If the machine must not be restarted when power is restored after a power failure, provide a magnetic contactor in the inverter's primary circuit and also make up a sequence which will not switch on the start signal.
   If the start signal (start switch) remains on after a power failure, the inverter will automatically restart as soon as the power is restored.
3) When the power supply used with the control circuit is different from the one used with the main circuit, make up a circuit which will switch off the main circuit power supply terminals R, S, T<L_1, L_2, L_3 > when the power supply terminals , R1, S1<L_{11}, L_{21}> for the control circuit are switched off.
4) Since the input signals to the control circuit are on a low level, use two parallel micro signal contacts or a twin contact for contact inputs to prevent a contact fault.
5) Do not apply a large voltage to the contact input terminals (e.g. STF) of the control circuit.
6) Do not apply a voltage directly to the alarm output signal terminals (A, B, C).
   Always apply a voltage to these terminals via a relay coil, lamp, etc.
7) Make sure that the specifications and rating match the system requirements.

1) Commercial power supply-inverter switch-over

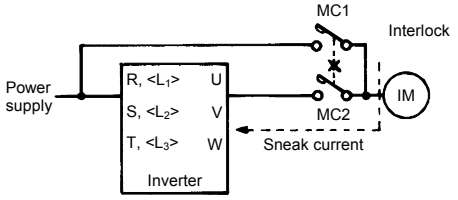

2) Low-level signal contacts

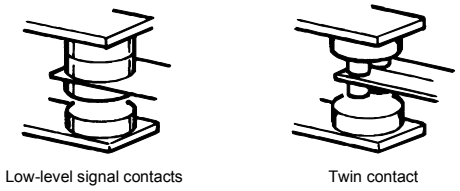

2.3 Other wiring

2.3.1 Inverter-driven 400V class motor

In the PWM type inverter, a surge voltage attributable to wiring constants is generated at the motor terminals. Especially for a 400V class motor, the surge voltage may deteriorate the insulation. When the 400V class motor is driven by the inverter, consider the following measures:

- Measures

  It is recommended to take either of the following measures:

  (1) Rectifying the motor insulation

  For the 400V class motor, use an insulation-rectified motor. Specifically,

  1) Specify the "400V class inverter-driven, insulation-rectified motor".

  2) For the dedicated motor such as the constant-torque motor and low-vibration motor, use the "inverter-driven, dedicated motor".

  (2) Suppressing the surge voltage on the inverter side

  On the secondary side of the inverter, connect the optional sine wave filter (MT-BSL/BSC).

2.3.2 Peripheral devices

(1) Selection of peripheral devices

Check the capacity of the motor to be used with the inverter you purchased. Appropriate peripheral devices must be selected according to the capacity.

Refer to the following list and prepare appropriate peripheral devices:

1) For A540L, 400V class DRIVE

Inverter Type	Motor Output (kW)	Power Supply Capacity (kVA)	DC reactor (accessory)	No-Fuse Breaker or Earth Leakage Circuit Breaker (Note2)	Magnetic Contactor (Note3)	Cooling fan (Remarks) (Note 4)
FR-A540L-S60K	60	93	T397MH176A	Type NF225, NV225 225A (NF225, NV225 225A)	S-N125 (S-N150)	EF-25ASB 1φ 100/110V 50/60Hz 19m³/min
FR-A540L-S80K	80	130	T318MH219A	Type NF225, NV225 225A (NF400, NV400 300A)	S-N150 (S-N180)	
FR-A540L-S100K	100	152	T265MH263A	Type NF225, NV225 225A (NF400, NV400 350A)	S-N180 (S-N220)	
FR-A540L-S120K	120	183	T220MH317A	Type NF400, NV400 400A (NF400, NV400 400A)	S-N180 (S-N220)	
FR-A540L-S132K	132	198	T220MH317	Type NF400, NV400 400A (NF400, NV400 400A)	S-N180 (S-N220)	EF-25ASB
FR-A540L-S160K	150	209	T199MH368	Type NF400, NV400 400A (NF400, NV400 400A)	S-N180 (S-N220)	EF-30BSB 1φ 100/110V 50/60Hz 20m³/min, 4mmAq Inlet hole size over 500mm × 500mm
FR-A540L-S160K	160	230	T199MH368	Type NF400, NV400 400A (NF600, NV600 500A)	S-N300 (S-N300)	
FR-A540L-S220K	200	300	T132MH527	Type NF400, NV400 400A (NF600, NV600 600A)	S-N300 (S-N400)	
FR-A540L-S220K	220	329	T132MH527	Type NF600, NV600 500A (NF600, NV600 600A)	S-N400 (S-N400)	
FR-A540L-S280K	250	374	T105MH667	Type NF600, NV600 600A (NF600, NV600 600A)	S-N400 (S-N600)	
FR-A540L-S280K	280	417	T105MH667	Type NF600, NV600 600A (NF800, NV800 800A)	S-N600 (S-N600)	
FR-A540L-S250K	250	375	T105MH667A	Type NF600, NV600 500A (NF600, NV600 600A)	S-N400 (S-N600)	EF-30BSC 1φ 100/110V 50/60Hz 28m³/min
FR-A540L-S375K	375	550	T79MH880A	Type NF600, NV600 600A (NF800, NV800 800A)	S-N600 (S-N600)	

Note :
1. Basically the 65kW and above motor is order-made, and the No. of poles, protection, type, etc., will differ according to the maker. Check the motor to be used again.
2. The types shown in parentheses apply for commercial operation. Select the breaking capacity that matches the short circuit capacity. When using an earth leakage breaker, use a high harmonics and surge compatible type, with a sensitivity current of 100 to 500mA.
3. The types shown in parentheses indicate the magnetic contactor on the motor side for commercial operation.
4. An exhaust fan is required to expel the heat generated in the panel. Consider the pressure loss caused by the intake port filter, and select a fan that provides sufficient exhaust wind.

2.3.3 Instructions for compliance with the UL and CSA standards

< For A540L 400V class DRIVE >

(1) Installation

The below types of inverter have been approved as products for use in enclosure and approval tests were conducted under the following conditions. for enclosure design, refer to these conditions so that the ambient temperature of the inverter 40°C or less.

Inverter Type	Cabinet (enclosure) (Unit: mm (inches))	Vent Hole Area	Cooling Fan
FR-A540L-S60K	W H D 800 × 2100 × 550 (31.50 x 82.68 x 21.65)	625cm^2	Install a cooling fan at top of the enclosure to suck internal air to the outside. (Fan air flow: 19m^3/min or more)
FR-A540L-S80K			
FR-A540L-S100K			
FR-A540L-S120K			
FR-A540L-S132K			
FR-A540L-S160K			
FR-A540L-S220K	W H D 800 × 2100 × 550 (31.50 x 82.68 x 21.65)	625cm^2	Install a cooling fan at top of the enclosure to suck internal air to the outside. (Fan air flow: 30m^3/min or more)
FR-A540L-S250K			
FR-A540L-S280K			
FR-A540L-S375K	W H D 1300 × 2300 × 800 (51.18 x 82.68 x 21.65)	3726cm^2	Install a cooling fan at top of the enclosure to suck internal air to the outside. (Fan air flow: 120m^3/min or more)

(2) Wiring of the power supply and motor

Use the UL-approved power supply and round crimping terminals to wire the input (R, S, T)<L_1, L_2, L_3> and output (U, V, W) terminals of the inverter. Crimp the terminals with the crimping tool recommended by the terminal manufacturer.

(3) Fuse

The fuse used on the input side should be any of the UL Class K5 fuses having the ratings as listed below:

Applicable Inverter Type	Rating (A)	Applicable Inverter Type	Rating (A)
FR-A540L-S60K	300	FR-A540L-S160K	400
FR-A540L-S80K	300	FR-A540L-S220K	600
FR-A540L-S100K	350	FR-A540L-S250K	800
FR-A540L-S120K	400	FR-A540L-S280K	800
FR-A540L-S132K	400	FR-A540L-S375K	1000

(4) Short-circuit rating

This following inverter has been put to the short-circuit test of the UL in the AC circuit whose peak current and voltage are limited to * and 500V maximum., respectively, and conforms to this circuit.

Inverter Type	*
S60K,S80K,S100K,S120K	10kA
S132K,S160K,S220K,S250K,S280K	18kA
S375K	30kA

2.3.4 Instructions for compliance with the European standards

(The products conforming to the Low Voltage Directive carry the CE mark.)

(1) EMC Directive

1) Our view of transistorized inverters for the EMC Directive
A transistorized inverter does not function independently. It is a component designed for installation in a control box and for use with the other equipment to control the equipment/device. Therefore, we understand that the EMC Directive does not apply directly to transistorized inverters. For this reason, we do not place the CE mark on the transistorized inverters themselves. (The CE mark is placed on inverters in accordance with the Low Voltage Directive.) The European power drive manufacturers' organization (CEMEP) also holds this point of view.

2) Compliance
We understand that the transistorized inverters themselves are not covered directly by the EMC Directive. However, the EMC Directive applies to machines/equipment into which transistorized inverters have been incorporated, and these machines and equipment must carry the CE marks. Hence, we prepared the technical information "EMC Installation Guidelines" (information number IB07395-02) so that machines and equipment incorporating transistorized inverters may conform to the EMC Directive more easily.

3) Outline of installation method
Install an inverter using the following methods:
* Use the inverter with an European Standard-compliant noise filter.
* For wiring between the inverter and motor, use shielded cables or run them in a metal piping and ground the cables on the inverter and motor sides with the shortest possible distance.
* Insert a line noise filter and ferrite core into the power and control lines as required.
Full information including the European Standard-compliant noise filter specifications are written in the technical information "EMC Installation Guidelines" (IB07395-02). Please contact your sales representative.

(2) Low Voltage Directive

1) Our view of transistorized inverters for the Low Voltage Directive
Transistorized inverters are covered by the Low Voltage Directive.

2) Compliance
We have confirmed our inverters as products compliant to the Low Voltage Directive and place the CE mark on the inverters.

3) Outline of instructions
* Connect the equipment to the earth securely. Do not use an earth leakage circuit breaker as an electric shock protector without connecting the equipment to the earth.
* Use the no-fuse breaker and magnetic contactor which conform to the EN or IEC Standard.
* Use the inverter under the conditions of overvoltage category III and contamination level 2 or higher specified in IEC664. To meet the contamination level 2, install the inverter into a cabinet protected against ingress of water, oil, carbon, dust, etc. (IP54 or higher).
* In the input and output of the inverter, use cables of the type and size set forth in EN60204 Annex C.
* The operating capacity of the relay outputs (terminal symbols A, B, C) should be 30VDC, 0.3A. (The relay outputs are basically isolated from the inverter's internal circuitry.)
* Inverter is not used in closed electrical operating area, then supply protective device with the inverter.
* In case of residual-current-operated protective device (RCD), install on mains supply side as a protection with regard to direct or indirect contact, only Type B is allowed.
* Else another protection measure like separation of equipment from environment by double or reinforced insulation or from mains by isolating transformer has be applied.
* Protective Earth (PE) conductor is connected to main PE terminal.
* Circuit breaker as short circuit and earth fault protection must be set within the inverter.

Details are given in the technical information "Low Voltage Directive Conformance Guide"(IB07400-01). Please contact your sales representative.

2.3.5 Earthing (EC version)

(1) Earthing and Earth Leakage Current

(a) Purpose of Earthing

Electrical equipment usually has an Earthing Terminal, this must be connected to earth before using equipment.

For protection, electric circuits are normally housed inside an insulated case. However it is impossible to manufacture insulating materials that prevent all current from leaking across them, therefore it is the function of the earth (safety earth) to prevent electric shocks when touching the case.

There is however, another important earthing function, which is to prevent equipment that uses very weak signals (Audio equipment, sensors, transducers, etc.) or micro processors from being affected by Radio Frequency Interference, (RFI) from external sources.]

(b) Points to remember when Earthing

As detailed above there are two entirely different types of earthing and to attempt to use the same earth for both will lead to problems. It is necessary to separate the “safety” earthing (a yellow/green wire to prevent electric shocks) from the “RFI” earthing (a braided wire strap to counter radio noise).

The inverter output voltage does not take the form of a sine wave but of a modulated pulse wave form causing “noisy” leakage current due to the capacitance of the insulation.

The same type of leakage current will occur in the motor due to the charging and discharging of the insulation from the high frequency wave form. This trend becomes more pronounced with higher carrier frequencies.

To solve this problem it is necessary to use separate “dirty” earthing for inverter and motor installations an “clean” earting for equipment such as sensors, computers and audio equipment.

(2) Earthing methods

Two main types of earth

1-To prevent electrical shocks

Yellow and green cable

2-To prevent RFI induced malfunction

Braided strap

It is important to make a clear distinction between these two, and to keep them separate by following the measures below.

(a) When possible earth the inverter independently of other equipment.

If independent earthing is not possible, use a common earthing point.

Avoid connecting earthing wires together particularly on high power equipment such as motors and inverters.

Independent earthing should always be used between sensitive equipment and inverters.

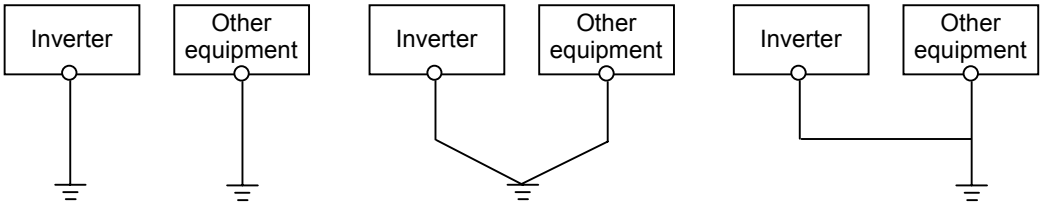

a) Independent grounding a) Common grounding c) Grounding wire of other equipment

CHAPTER 3
OPERATION

This chapter provides the basic "operation" information for use of this product.
Always read this chapter before using the equipment.

3.1 Pre-Operation Information ····· 28
3.2 Operation ····· 36

3.1 Pre-Operation information

3.1.1 Devices and parts to be prepared for operation

The inverter can be operated in "external operation mode", "PU operation mode", "combined operation mode" and "communication operation mode". Prepare required instruments and parts according to application and running conditions.

(1) External operation mode (factory setting)

The inverter is operated under the control of external operation signals (frequency setting potentiometer, start switch, etc.) connected to the terminal block. With input power on, switch on the start signal (STF, STR) to start operation.

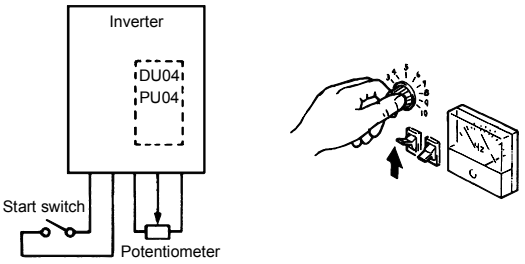

Preparation

- Start signal ····· Switch, relay, etc.
- Frequency setting signal ····· 0 to 5V, 0 to 10V, 4 to 20mA DC signals from a potentiometer or outside the inverter

Note: 1. Both the start signal and frequency setting signal are required to run the inverter.

(2) PU operation mode

The inverter is operated from the keypad of the PU (FR-DU04/FR-PU04).
This mode does not require the operation signals to be connected and is useful for an immediate start of operation.

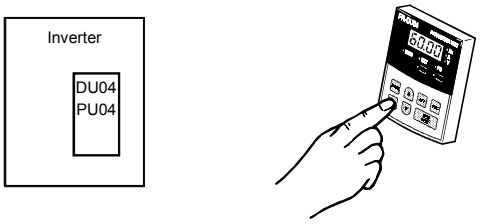

Preparation

- Operation unit ····· Operation panel (FR-DU04), parameter unit (FR-PU04)
- Connection cable ····· To be prepared for use of the operation unit away from the inverter.
  FR-CB2 (option) or the following connector and cable available on the market:
  Connector : RJ45 connector
  Cable : Cable conforming to EIA568 (e.g. 10BASE-T cable)

(3) External/PU combined operation mode

The inverter is operated with the external operation and PU operation modes combined in any of the following ways:

1) The start signal is set with the external signal and the frequency setting signal set from the PU; or
2) The start signal is set with the run command key of the PU (FR-DU04/FR-PU04) and the frequency setting signal set with the external frequency setting potentiometer.
3) Set 3 in Pr. 79 "operation mode selection".

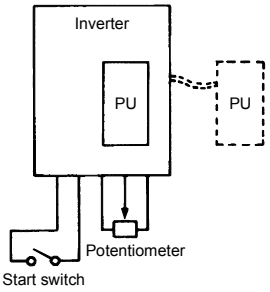

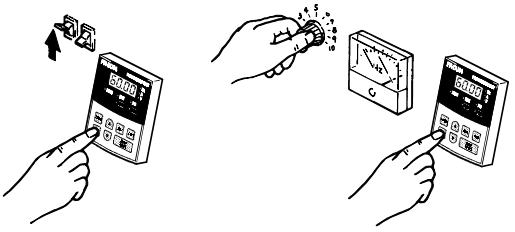

Preparation

- Start signal ····· Switch, relay, etc. (for 1)
- Frequency setting signal ····· 0 to 5V, 0 to 10V, 4 to 20mA DC signals from a potentiometer or outside the inverter (for 2)
- Operation unit ····· Operation panel (FR-DU04), parameter unit (FR-PU04)
- Connection cable ····· To be prepared for use of the operation unit away from the inverter
  FR-CB2 (option) or the following connector and cable available on the market:
  Connector : RJ45 connector
  Cable : Cable conforming to EIA568 (e.g. 10BASE-T cable)

3) Combined operation mode

Change the setting of Pr. 79 "operation mode selection" as follows:

Setting	Description	
	Running frequency setting	**Start signal**
3	PU (FR-DU04/FR-PU04) ・ Direct setting and [UP/DOWN] key setting	Terminal signal ・ STF ・ STR
4	Terminal signal ・ 0 to 5VDC across 2-5 ・ 0 to 10VDC across 2-5 ・ 4 to 20mADC across 4-5 ・ Multi-speed selection (Pr. 4 to Pr.6, Pr.24 to Pr.27) ・ Jog frequency (Pr. 15)	Parameter unit ・ [FWD] key ・ [REV] key

3.1.2 Power on

Before switching power on, check the following:

• Installation check

Make sure that the inverter is installed correctly in a correct place. (Refer to page 6.)

・ Wiring check

Make sure that the main and control circuits are wired correctly.

Make sure that the options and peripheral devices are selected and connected correctly.

(Refer to page 8.)

• Switch power on.

Power-on is complete when the POWER lamp is lit correctly and the operation panel (FR-DU04) displays correct data.

3.1.3 Parameter check

The inverter is designed to perform simple variable-speed operation with the factory settings of the parameters. Set the necessary parameters according to the load and operation specifications. Use the operation panel (FR-DU04) to set, change and confirm the parameter values. For full information on the parameters, refer to "CHAPTER 4 PARAMETERS" (page 40).

(1) Operation panel (FR-DU04)

With the operation panel (FR-DU04), you can set the running frequency, monitor the operation command display, set parameters, display an error, and copy parameters.

1) Names and functions of the operation panel (FR-DU04)

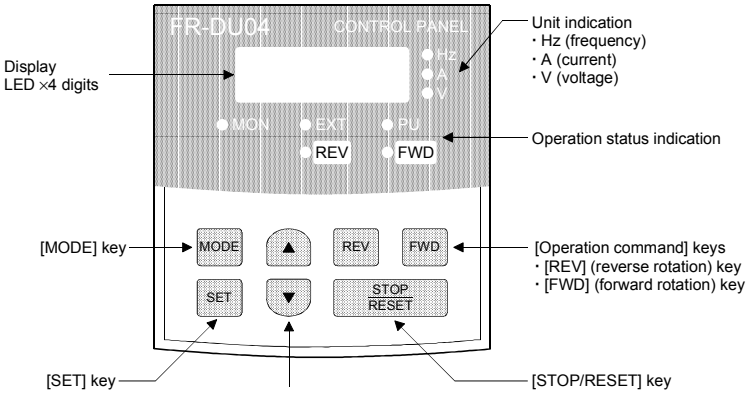

Key	Description
[MODE] key	You can select the operation mode or setting mode.
[SET] key	You can determine the frequency and parameter setting.
[UP/DOWN] key	・ Used to increase or decrease the running frequency consecutively. Hold down this key to change the frequency. ・ Press this key in the setting mode to change the parameter setting consecutively.
[REV] key	Used to give a reverse rotation command.
[FWD] key	Used to give a forward rotation command.
[STOP/RESET] key	・ Used to stop operation. ・ Used to reset the inverter when its output is stopped by the protective function activated (major fault).

2) Monitor display changed by pressing the [MODE] key

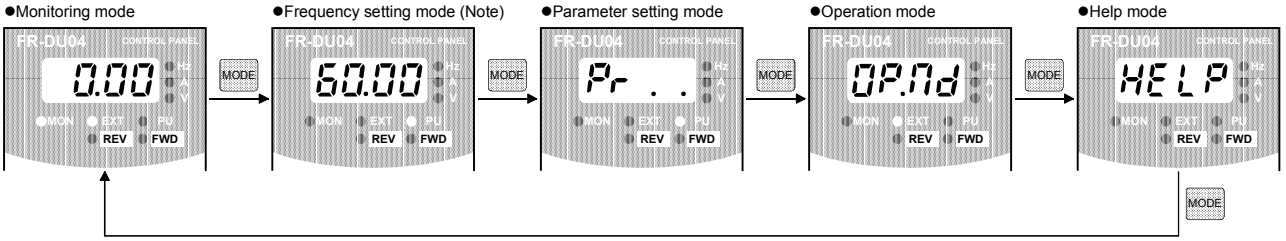

Note: The frequency setting mode is displayed only in the PU operation mode.

(2) Key operation

1) Monitoring mode

- Operation command indications in the monitoring mode
  EXT is lit to indicate external operation.
  PU is lit to indicate PU operation.
  Both EXT and PU are lit to indicate PU/external combined operation mode.
- The monitor display can also be changed during operation.

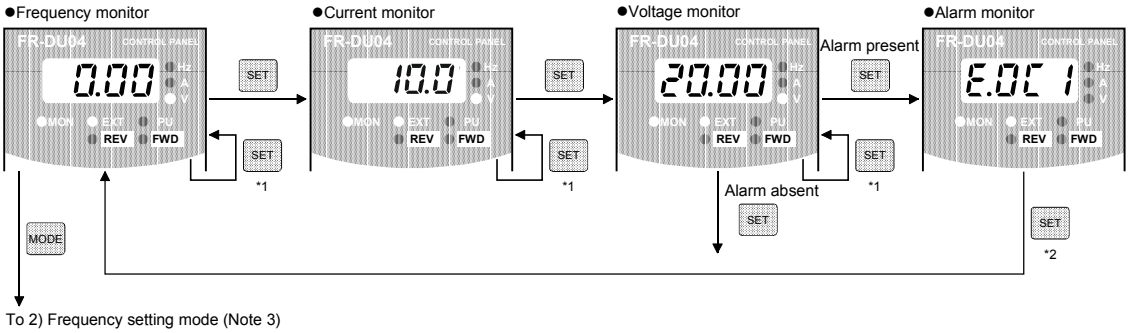

Note: 1. Hold down the [SET] key marked *1 for more than 1.5 seconds to change the current monitor to the power-on monitor.
2. Hold down the [SET] key marked *2 for more than 1.5 seconds to display four errors including the most recent one.
3. Shifts to the parameter setting mode when in the external operation mode.

2) Frequency setting mode

- Used to set the running frequency in the PU operation mode.

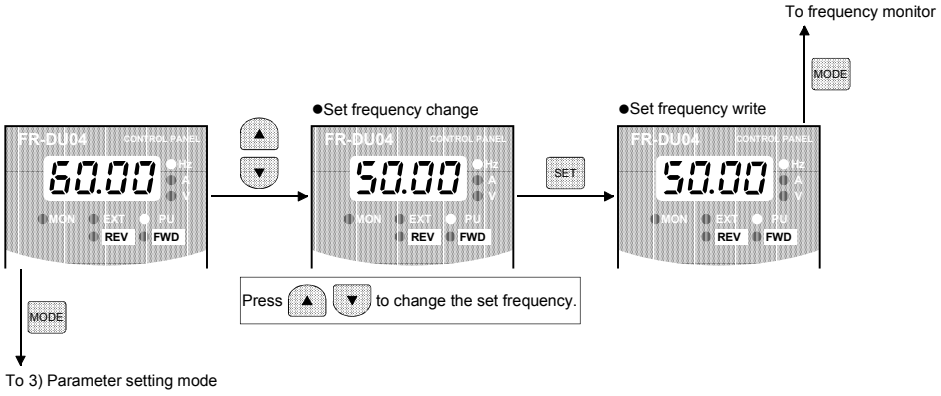

3) Parameter setting mode

- A parameter value may either be set by updating its parameter number or setting the value digit-by-digit using the [UP/DOWN] key.
- To write the setting, change it and press the [SET] key 1.5 seconds.
  Set "0" or "4" (factory setting) in Pr. 79 "operation mode selection" or select the PU operation mode.

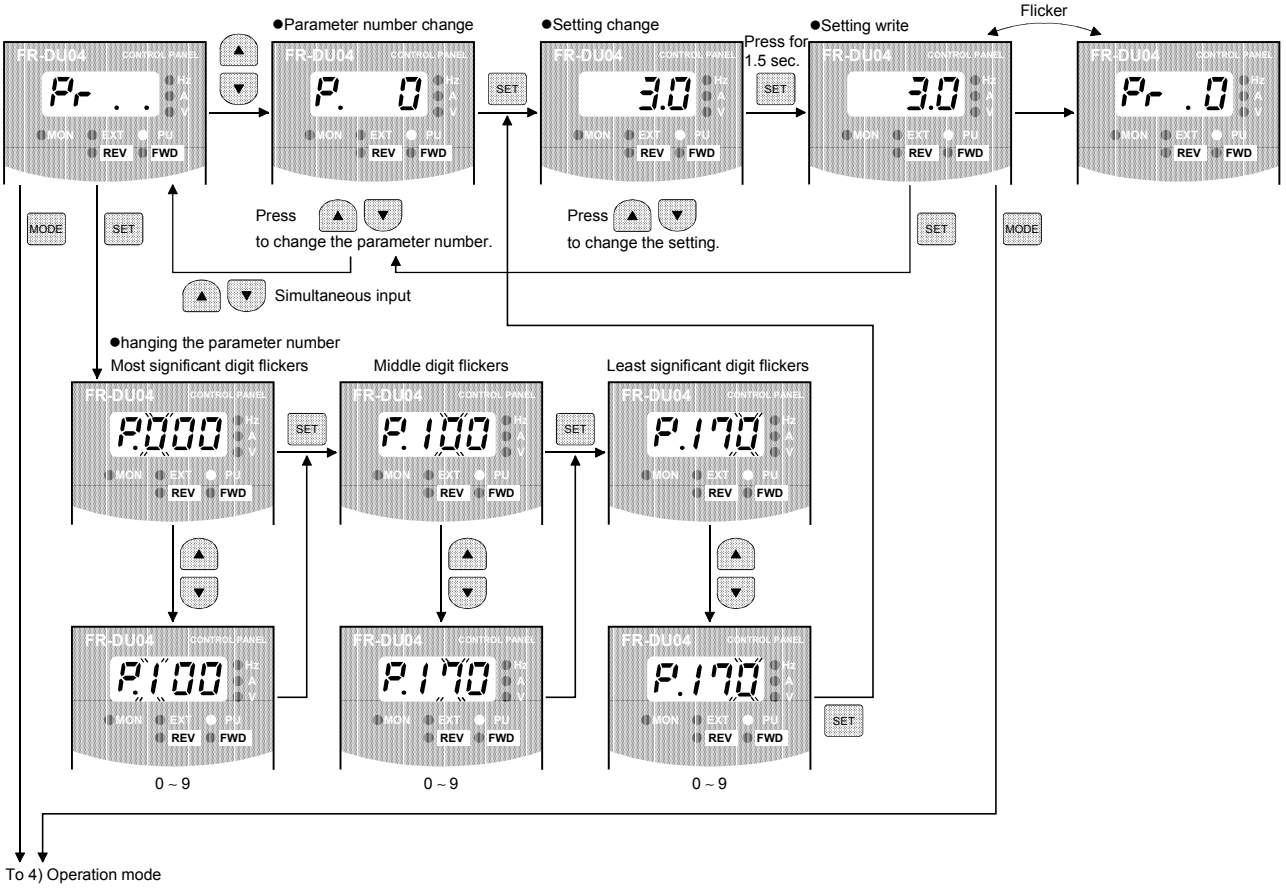

4) Operation mode

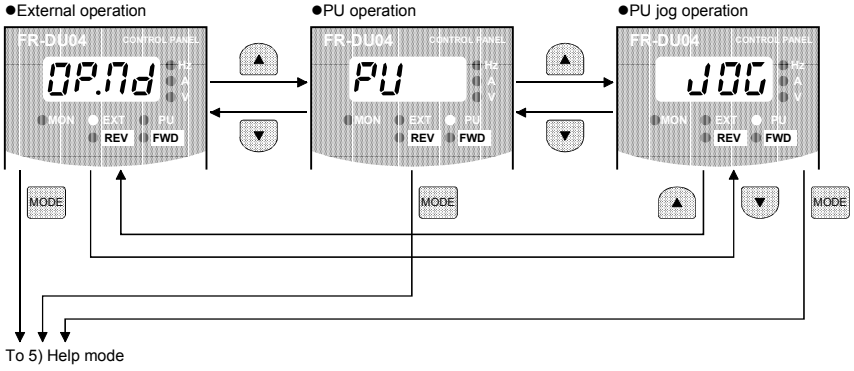

5) Help mode

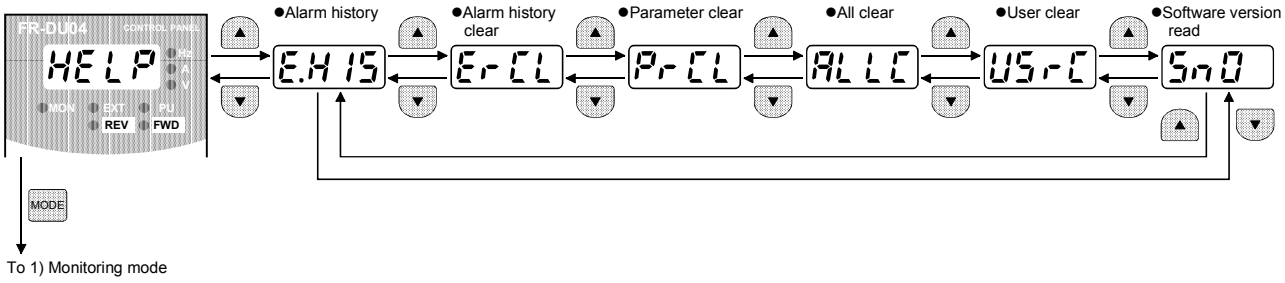

・ Alarm history

Four past alarms can be displayed with the [UP/DOWN] key.
("." is appended to the most recent alarm.)

E.HIS —SET→ Shows an alarm. (When no alarm exists, E._ _0 is displayed.)

Alarm display —SET→ Frequency at alarm occurrence is displayed.

・ Alarm history clear

Clears all alarm history.

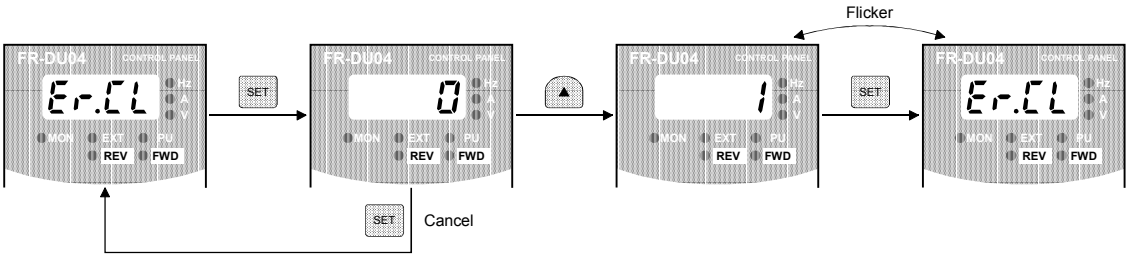

・ Parameter clear

Initialises the parameter values to the factory settings. The calibration values are not initialized.
(Parameter values are not cleared by setting "1" in Pr. 77 "parameter write disable selection).)

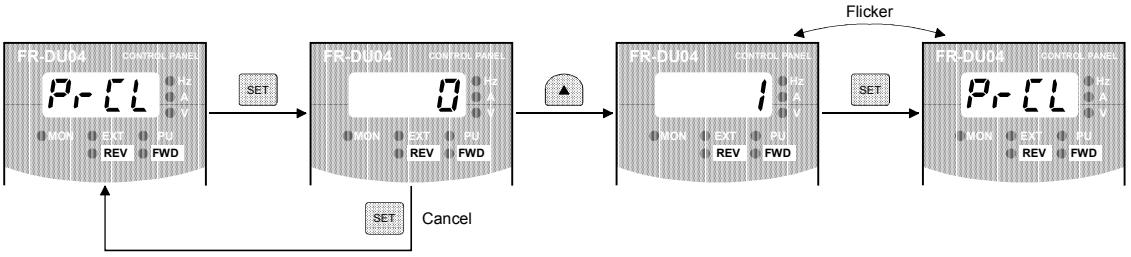

・ All clear

Initialises the parameter values and calibration values to the factory settings.

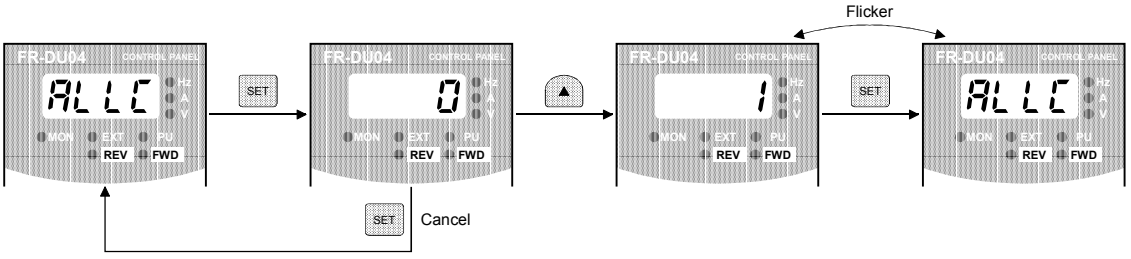

・ User clear

Initialises the user-set parameters.
The other parameters are initialized to the factory settings.

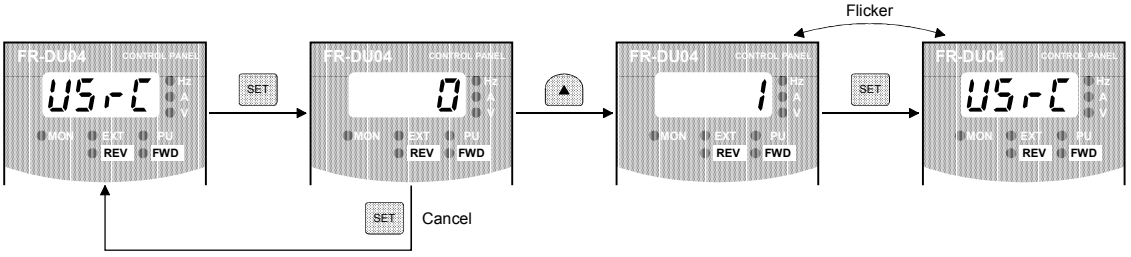

6) Copy mode

By using the operation panel (FR-DU04), the parameter values can be copied to another inverter (only the FR-A500L series).

1) Operation procedure

After reading the parameter values from the copy source inverter, connect the operation panel to the copy destination inverter, and write the parameter values.

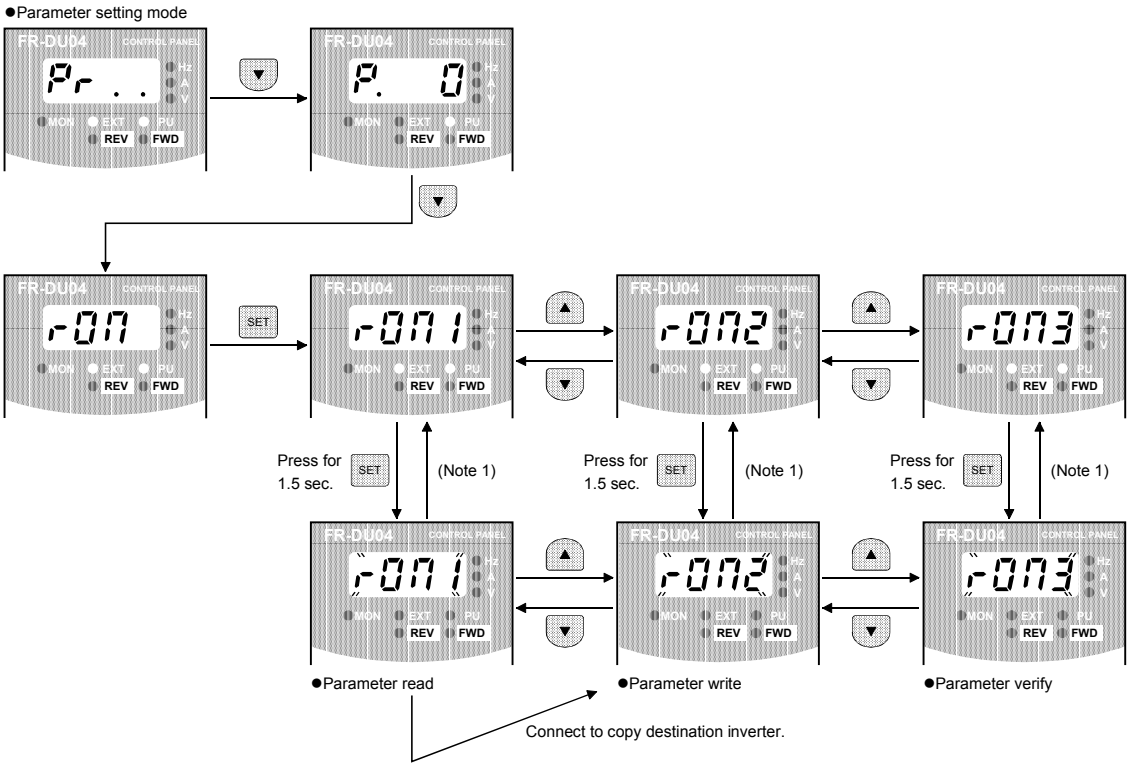

Note: 1. While the copy function is being activated, the monitor display flickers. The display returns to the lit-up state on completion of the copy function.
2. If a read error occurs during parameter read, "read error (E.rE1)" is displayed.
3. If a write error occurs during parameter write, "write error (E.rE2)" is displayed.
4. If a data discrepancy occurs during parameter verify, the corresponding parameter number and "verify error (E.rE3)" are displayed alternately. If the direct frequency setting or jog frequency setting is discrepant, "verify error (E.rE3)" flickers. To ignore this display and continue verify, press the [SET] key.
5. When the copy destination inverter is not the FR-A500L series, "model error (E.rE4)" is displayed.

Reference:

It is recommended to read the parameter values after completion of parameter setting.

By writing the parameter values from the operation panel fitted to a new inverter after inverter replacement, parameter setup can be completed.

(3) Parameter setting check

We recommend the following parameters to be set by the user.
Set them according to the operation specifications, load, etc. (Refer to page 40.)

Parameter Number	Name	Application
1	Maximum frequency	Used to set the maximum and minimum output frequencies.
2	Minimum frequency	
7	Acceleration time	Used to set the acceleration and deceleration times.
8	Deceleration time	
44	Second acceleration/deceleration time	
45	Second deceleration time	
110	Third acceleration/deceleration time	
111	Third deceleration time	
9	Electronic thermal O/L relay	Used to set the current of the electronic overcurrent protection to protect the motor from overheat.
14	Load pattern selection	Used to select the optimum output characteristics which match the application and load characteristics.
71	Applied motor	Used to set the thermal characteristics of the electronic overcurrent protection according to the motor used.
73	0-5V/0-10V selection	Used to select the specifications of the frequency setting signal entered across terminal 2-5 to perform operation with the voltage input signal.
900	FM terminal calibration	Used to calibrate the meters connected across terminals FM-SD and AM-5.
901	AM terminal calibration	
902	Frequency setting voltage bias	Used to set the magnitude (slope) of the output frequency relative to the frequency setting signal (0 to 5V, 0 to 10V or 4 to 20mA DC) as desired.
903	Frequency setting voltage gain	
904	Frequency setting current bias	
905	Frequency setting current gain	

3.2 Operation

3.2.1 Pre-operation checks

Before starting operation, check the following:

- Safety
  Perform test operation after making sure that safety is ensured if the machine should become out of control.
- Machine
  Make sure that the machine is free of damage.
- Parameters
  Set the parameter values to match the operating machine system environment.
- Test operation
  Perform test operation and make sure that the machine operates safely under light load at a low frequency. After that, start operation.

3.2.2 External operation mode (Operation using external input signals)

(1) Operation at 60Hz

Step	Description	Image
1	Switch power on and make sure that the operation command indication "EXT" is lit. (If it is not lit, switch to the external operation mode.)	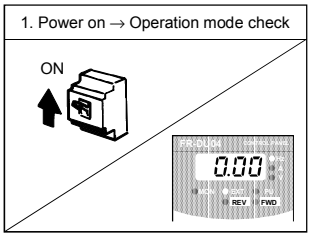
2	Turn on the start switch (STF or STR). The operation command indication "STF" or "STR" flickers. Note: The motor does not start if both the forward and reverse rotation switches are turned on. If both switches are turned on during operation, the motor decelerates to a stop.	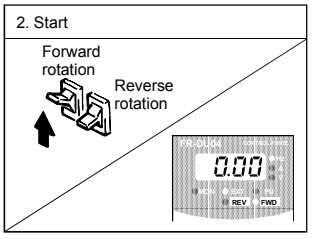
3	Slowly turn the potentiometer (frequency setting potentiometer) full clockwise. The frequency shown on the display increases gradually to 60.00Hz and the running status indication FWD or REV is lit.	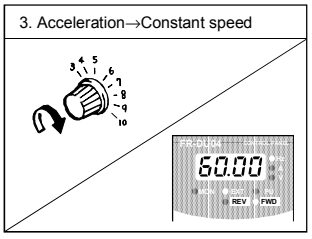
4	Slowly turn the potentiometer (frequency setting potentiometer) full counterclockwise. The frequency shown on the display decreases gradually to 0.00Hz. The motor stops running.	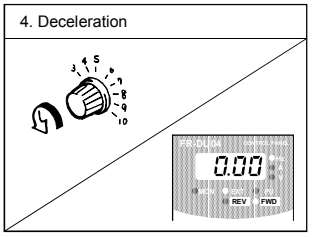
5	Turn off the start switch (STF or STR).	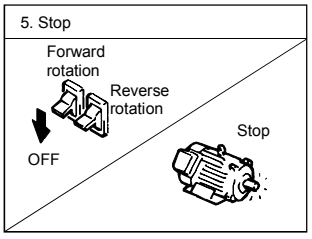

(2) External jog operation

Keep the start switch (STF or STR) on to perform operation, and switch it off to stop.

1) Set Pr. 15 "jog frequency" and Pr. 16 "jog acceleration/deceleration".
2) Select the external operation mode.
3) Switch on the jog signal. Keep the start switch (STF or STR) on to perform operation.

3.2.3 PU operation mode (Operation using the operation panel (FR-DU04))

(1) Operation at 60Hz

While the motor is running, speed can be varied by repeating the following steps 2 and 3:

Step	Description	Image
1	Switch power on and make sure that the operation command indication "PU" is lit. (If it is not lit, switch to the PU operation mode.)	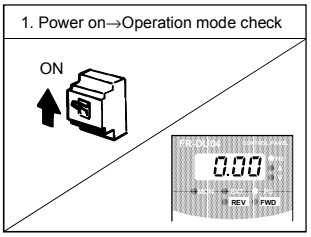
2	Set the running frequency to 60Hz. First, press the [MODE] key to select the frequency setting mode. Then, press the [UP/DOWN] key to change the setting, and press the [SET] key to write the frequency.	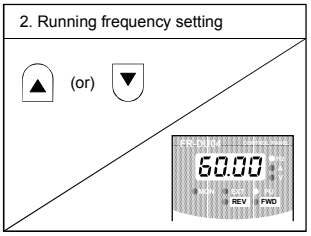
3	Press the [FWD] or [REV] key. The motor starts running. The monitoring mode is automatically selected and the output frequency is displayed.	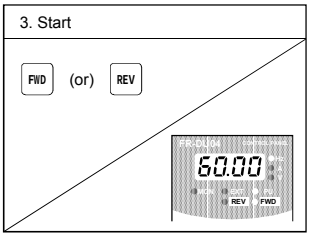
4	Press the [STOP] key. The motor is decelerated to a stop.	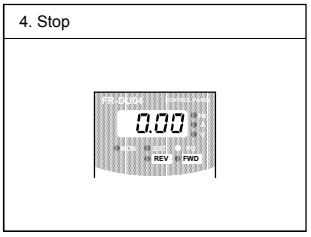

(2) PU jog operation

Hold down the [FWD] or [REV] key to perform operation, and release it to stop.

1) Set Pr. 15 "jog frequency" and Pr. 16 "jog acceleration/deceleration".
2) Select the PU jog operation mode.
3) Hold down the [FWD] or [REV] key to perform operation.
   (If the motor remains stopped, check Pr. 13 "starting frequency". The motor will not start if its setting is lower than the starting frequency.)

3.2.4 Combined operation mode (Operation using the external input signals and PU)

When entering the start signal from outside the inverter and setting the running frequency from the PU (Pr. 79 = 3)
The external frequency setting signals and the PU's FWD, REV and STOP keys are not accepted.

Step	Description	Image
1	Switch power on.	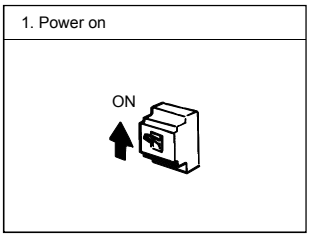
2	Set "3" in Pr. 79 "operation mode selection". The combined operation mode is selected and the operation status indication "EXT" and "PU" are lit.	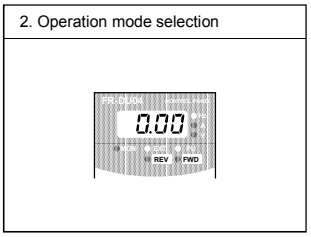
3	Turn on the start switch (STF or STR). Note: The motor does not start if both the forward and reverse rotation switches are turned on. If both switches are turned on during operation, the motor decelerates (when Pr. 250 = "9999") to a stop.	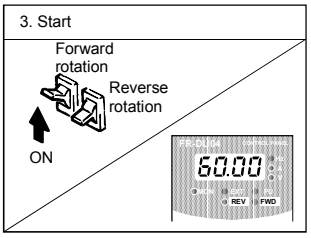
4	Using the parameter unit, set the running frequency to 60Hz. The operation command indication "REV" or "FWD" is lit. ・ Select the frequency setting mode and make step setting. Note: Step setting is the way of changing the frequency consecutively by pressing the [UP/DOWN] key. Hold down the [UP/DOWN] key to change the frequency.	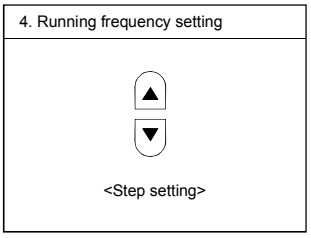
5	Turn off the start switch (STF or STR). The motor stops running.	

CHAPTER 4
PARAMETERS

This chapter explains the "parameters" of this product.
Always read the instructions before using the equipment.

4.1 Parameter List ····· 40
4.2 Parameter Function Details ····· 46

Note: By making parameter settings, you can change the functions of contact input terminals RL, RM, RH, RT, AU, JOG, CS and open collector output terminals RUN, SU, IPF, OL, FU. Therefore, signal names corresponding to the functions are used in the description of this chapter (except in the wiring examples). Note that they are not terminal names.
The setting in brackets refer to the “EC” versions default settings.

4.1 Parameter List

Func-tion	Parameter Number	Name	Setting Range	Minimum Setting Increments	Factory Setting	Refer To Page:
Basic functions	0	Torque boost (Note 1)	0 to 30%	0.1%	1%	46
	1	Maximum frequency	0 to 60Hz	0.01Hz	60Hz	47
	2	Minimum frequency	0 to 120Hz	0.01Hz	0Hz	47
	3	Base frequency	0 to 400Hz	0.01Hz	60Hz<50Hz>	48
	4	Multi-speed setting (high speed)	0 to 400Hz	0.01Hz	60Hz	49
	5	Multi-speed setting (middle speed)	0 to 400Hz	0.01Hz	30Hz	49
	6	Multi-speed setting (low speed)	0 to 400Hz	0.01Hz	10Hz	49
	7	Acceleration time	0 to 3600 sec/ 0 to 360 sec	0.1 sec/ 0.01 sec	15 sec	50
	8	Deceleration time	0 to 3600 sec/ 0 to 360 sec	0.1 sec/ 0.01 sec	15 sec	50
	9	Electronic thermal O/L relay	0 to 3600A	0.1A	Rated output current	51
Standard operation functions	10	DC injection brake operation frequency	0 to 120Hz, 9999	0.01Hz	3Hz	52
	11	DC injection brake operation time	0 to 10 sec, 8888	0.1 sec	0.5 sec	52
	12	DC injection brake voltage	0 to 30%	0.1%	1%	52
	13	Starting frequency	0 to 60Hz	0.01Hz	0.5Hz	53
	14	Load pattern selection (Note 1)	0 to 5	1	0	53
	15	Jog frequency	0 to 400Hz	0.01Hz	5Hz	54
	16	Jog acceleration/deceleration time	0 to 3600 sec/ 0 to 360 sec	0.1 sec/ 0.01 sec	0.5 sec	54
	17	MRS input selection	0,2	1	0	55
	18	High-speed maximum frequency	0 to 400Hz	0.01Hz	60Hz	55
	19	Base frequency voltage (Note 1)	0 to 1000V, 8888, 9999	0.1V	9999<8888>	55
	20	Acceleration/deceleration reference frequency	1 to 400Hz	0.01Hz	60Hz<50Hz>	55
	21	Acceleration/deceleration time increments	0,1	1	0	55
	22	Stall prevention operation level	0 to 200%, 9999	0.1%	150%(CT)/120%(VT) (Note 8)	56
	23	Stall prevention operation level at double speed	0 to 200%, 9999	0.1%	9999	56
	24	Multi-speed setting (speed 4)	0 to 400Hz, 9999	0.01Hz	9999	57
	25	Multi-speed setting (speed 5)	0 to 400Hz, 9999	0.01Hz	9999	57
	26	Multi-speed setting (speed 6)	0 to 400Hz, 9999	0.01Hz	9999	57
	27	Multi-speed setting (speed 7)	0 to 400Hz, 9999	0.01Hz	9999	57
	28	Multi-speed input compensation	0, 1	1	0	57
	29	Acceleration/deceleration pattern	0, 1, 2, 3	1	0	58
	30	Regenerative function selection	0, 1, 2	1	0	59
	31	Frequency jump 1A	0 to 400Hz, 9999	0.01Hz	9999	60
	32	Frequency jump 1B	0 to 400Hz, 9999	0.01Hz	9999	60
	33	Frequency jump 2A	0 to 400Hz, 9999	0.01Hz	9999	60
	34	Frequency jump 2B	0 to 400Hz, 9999	0.01Hz	9999	60
	35	Frequency jump 3A	0 to 400Hz, 9999	0.01Hz	9999	60
	36	Frequency jump 3B	0 to 400Hz, 9999	0.01Hz	9999	60
	37	Speed display	0,1 to 9998	1	0	61
Output terminal functions	41	Up-to-frequency sensitivity	0 to 100%	0.1%	10%	62
	42	Output frequency detection	0 to 400Hz	0.01Hz	6Hz	62
	43	Output frequency detection for reverse rotation	0 to 400Hz, 9999	0.01Hz	9999	62
Second functions	44	Second acceleration/deceleration time	0 to 3600 sec/ 0 to 360 sec	0.1 sec/0.01 sec	5 sec	63
	45	Second deceleration time	0 to 3600 sec/0 to 360 sec, 9999	0.1 sec/0.01 sec	9999	63
	46	Second torque boost (Note 1)	0 to 30%, 9999	0.1%	9999	63
	47	Second V/F (base frequency) (Note 1)	0 to 400Hz, 9999	0.01Hz	9999	63
	48	Second stall prevention operation current	0 to 200%	0.1%	150%(CT)/120%(VT) (Note 8)	63
	49	Second stall prevention operation frequency	0 to 400Hz, 9999	0.01Hz	0	63
	50	Second output frequency detection	0 to 400Hz	0.01Hz	30Hz	64

Func-tion	Parameter Number	Name	Setting Range	Minimum Setting Increments	Factory Setting	Refer To Page:
Display functions	52	DU/PU main display data selection	0, 5 to 14, 17, 18, 20, 23, 24, 25, 100	1	0	65
	53	PU level display data selection	0 to 3, 5 to 14, 17, 18	1	1	65
	54	FM terminal function selection	1 to 3, 5 to 14, 17, 18, 21	1	1	65
	55	Frequency monitoring reference	0 to 400Hz	0.01Hz	60Hz<50Hz>	67
	56	Current monitoring reference	0 to 3600A	0.1A	Rated output current	67
Automatic restart functions	57	Restart coasting time	0 to 30 sec, 9999	0.1 sec	9999	68
	58	Restart cushion time	0 to 60 sec	0.1 sec	1.0 sec	68
Additional function	59	Remote setting function selection	0, 1, 2	1	0	70
Operation selection functions	60	Intelligent mode selection	0 to 8	1	0	71
	61	Reference I for intelligent mode	0 to 3600A, 9999	0.1A	9999	73
	62	Ref. I for intelligent mode accel.	0 to 200%, 9999	0.1%	9999	73
	63	Ref. I for intelligent mode decel.	0 to 200%, 9999	0.1%	9999	73
	64	Starting frequency for elevator mode	0 to 10Hz, 9999	0.01Hz	9999	73
	65	Retry selection	0 to 5	1	0	74
	66	Stall prevention operation level reduction starting frequency	0 to 400Hz	0.01Hz	60Hz<50Hz>	75
	67	Number of retries at alarm occurrence	0 to 10,101 to 110	1	0	74
	68	Retry waiting time	0 to 10 sec	0.1 sec	1 sec	74
	69	Retry count display erasure	0	——	0	74
	70	Special regenerative brake duty	0 to 100%	0.1%	0%	75
	71	Applied motor (Note 8)	0 to 8, 13 to 18	1	0	76
	72	PWM frequency selection	0, 1, 2	1	1	77
	73	0-5V/0-10V selection	0 to 5, 10 to 15	1	1	78
	74	Filter time constant	0 to 8	1	1	79
	75	Reset selection/disconnected PU detection/PU stop selection	0 to 3, 14 to 17	1	14	79
	76	Alarm code output selection	0, 1, 2, 3	1	0	81
	77	Parameter write disable selection	0, 1, 2	1	0	82
	78	Reverse rotation prevention selection	0, 1, 2	1	0	83
	79	Operation mode selection	0 to 8	1	0	84
Motor constants	80	Motor capacity	0 to 3600kW, 9999	0.1kW	9999	87
	81	Number of motor poles	2, 4, 6, 12, 14, 16, 9999	1	9999	87
	82	Motor exciting current (Note 6)	0 to , 9999	1	9999	88
	83	Rated motor voltage	0 to 1000V	0.1V	400V/575V	88
	84	Rated motor frequency	50 to 120Hz	0.01Hz	60Hz<50Hz>	88
	89	Speed control gain	0 to 200%	0.1%	100%	94
	90	Motor constant (R1) (Note 6)	(Note 6)	(Note 6)	9999	88
	91	Motor constant (R2) (Note 6)	(Note 6)	(Note 6)	9999	88
	92	Motor constant (L1) (Note 6)	(Note 6)	(Note 6)	9999	88
	93	Motor constant (L2) (Note 6)	(Note 6)	(Note 6)	9999	88
	94	Motor constant (X) (Note 6)	(Note 6)	(Note 6)	9999	88
	95	Online auto tuning selection	0, 1	1	0	94
	96	Auto tuning setting/status	0, 1, 101	1	0	95
5-point flexible V/F characteristics	100	V/F1 (first frequency) (Note 1)	0 to 400Hz, 9999	0.01Hz	9999	96
	101	V/F1 (first frequency voltage) (Note 1)	0 to 1000V	0.1V	0	96
	102	V/F2 (second frequency) (Note 1)	0 to 400Hz, 9999	0.01Hz	9999	96
	103	V/F2 (second frequency voltage) (Note 1)	0 to 1000V	0.1V	0	96
	104	V/F3 (third frequency) (Note 1)	0 to 400Hz, 9999	0.01Hz	9999	96
	105	V/F3 (third frequency voltage) (Note 1)	0 to 1000V	0.1V	0	96
	106	V/F4 (fourth frequency) (Note 1)	0 to 400Hz, 9999	0.01Hz	9999	96

Func-tion	Parameter Number	Name	Setting Range	Minimum Setting Increments	Factory Setting	Refer To Page:
5-point flexible V/F characteristics	107	V/F4 (fourth frequency voltage) (Note 1)	0 to 1000V	0.1V	0	96
	108	V/F5 (fifth frequency) (Note 1)	0 to 400Hz, 9999	0.01Hz	9999	96
	109	V/F5 (fifth frequency voltage) (Note 1)	0 to 1000V	0.1V	0	96
Third functions	110	Third acceleration/deceleration time	0 to 3600 sec/0 to 360 sec, 9999	0.1 sec/0.01 sec	9999	97
	111	Third deceleration time	0 to 3600 sec/0 to 360 sec, 9999	0.1 sec/0.01 sec	9999	97
	112	Third torque boost (Note 1)	0 to 30.0%, 9999	0.1%	9999	97
	113	Third V/F (base frequency) (Note 1)	0 to 400Hz, 9999	0.01Hz	9999	97
	114	Third stall prevention operation current	0 to 200%	0.1%	150%(CT)/120%(VT) (Note 8)	97
	115	Third stall prevention operation frequency	0 to 400Hz	0.01Hz	0	97
	116	Third output frequency detection	0 to 400Hz, 9999	0.01Hz	9999	97
Communication functions	117	Station number	0 to 31	1	0	97
	118	Communication speed	48, 96, 192	1	192	97
	119	Stop bit length/data length	0, 1 (data length 8) 10, 11 (data length 7)	1	1	97
	120	Parity check presence/absence	0, 1, 2	1	2	97
	121	Number of communication retries	0 to 10, 9999	1	1	97
	122	Communication check time interval	0, 0.1 to 999.8 sec, 9999	0.1	0<9999>	97
	123	Waiting time setting	0 to 150ms, 9999	10ms	9999	97
	124	CR, LF presence/absence selection	0,1,2	1	1	97
PID control	128	PID action selection	10, 11, 20, 21	1	10	107
	129	PID proportional band	0.1 to 1000%, 9999	0.1%	100%	107
	130	PID integral time	0.1 to 3600 sec, 9999	0.1 sec	1 sec	107
	131	Upper limit	0 to 100%, 9999	0.1%	9999	107
	132	Lower limit	0 to 100%, 9999	0.1%	9999	107
	133	PID action set point for PU operation	0 to 100%	0.01%	0%	107
	134	PID differential time	0.01 to 10.00 sec, 9999	0.01 sec	9999	107
Commercial power supply-inverter switch-over	135	Commercial power supply-inverter switch-over sequence output terminal selection	0, 1, 2	1	0	114
	136	MC switch-over interlock time	0 to 100.0 sec	0.1 sec	1.0 sec	114
	137	Start waiting time	0 to 100.0 sec	0.1 sec	0.5 sec	114
	138	Commercial power supply-inverter switch-over selection at alarm occurrence	0, 1	1	0	114
	139	Automatic inverter-commercial power supply switch-over frequency	0 to 60.00Hz, 9999	0.01Hz	9999	114
Backlash	140	Backlash acceleration stopping frequency (Note 7)	0 to 400Hz	0.01Hz	1.00Hz	117
	141	Backlash acceleration stopping time (Note 7)	0 to 360 sec	0.1 sec	0.5 sec	117
	142	Backlash deceleration stopping frequency (Note 7)	0 to 400Hz	0.01Hz	1.00Hz	117
	143	Backlash deceleration stopping time (Note 7)	0 to 360 sec	0.1 sec	0.5 sec	117
Display	144	Speed setting switch-over	0, 2, 4, 6, 8, 10, 102, 104, 106, 108, 110	1	4	117
Additional functions	148	Stall prevention level at 0V input	0 to 200%	0.1%	150%(CT)/120%(VT) (Note 8)	117
	149	Stall prevention level at 10V input	0 to 200%	0.1%	200%(CT)/150%(VT) (Note 8)	117

Func-tion	Parameter Number	Name	Setting Range	Minimum Setting Increments	Factory Setting	Refer To Page:
Current detection	150	Output current detection level	0 to 200%	0.1%	150%(CT)/120%(VT) (Note 8)	118
	151	Output current detection period	0 to 10 sec	0.1 sec	0	118
	152	Zero current detection level	0 to 200.0%	0.1%	5.0%	119
	153	Zero current detection period	0 to 1 sec	0.01 sec	0.5 sec	119
Sub functions	154	Voltage reduction selection during stall prevention operation	0, 1	1	1	119
	155	RT activated condition	0, 10	1	0	120
	156	Stall prevention operation selection	0 to 31, 100,101	1	0	120
	157	OL signal waiting time	0 to 25 sec, 9999	0.1 sec	0	122
	158	AM terminal function selection	1 to 3, 5 to 14, 17, 18, 21	1	1	122
Additional function	160	User group read selection	0, 1, 10, 11	1	0	123
Automatic restart after instantaneous power failure	162	Automatic restart after instantaneous power failure selection	0, 1, 2	1	0	123
	163	First cushion time for restart	0 to 20 sec	0.1 sec	0 sec	123
	164	First cushion voltage for restart	0 to 100%	0.1%	0%	123
	165	Restart stall prevention operation level	0 to 200%	0.1%	150%(CT)/120%(VT) (Note 8)	123
Initial monitor	170	Watt-hour meter clear	0	——	0	124
	171	Actual operation hour meter clear	0	——	0	124
User functions	173	User group 1 registration	0 to 999	1	0	124
	174	User group 1 deletion	0 to 999, 9999	1	0	124
	175	User group 2 registration	0 to 999	1	0	124
	176	User group 2 deletion	0 to 999, 9999	1	0	124
Terminal assignment functions	180	RL terminal function selection	0 to 99, 9999	1	0	124
	181	RM terminal function selection	0 to 99, 9999	1	1	124
	182	RH terminal function selection	0 to 99, 9999	1	2	124
	183	RT terminal function selection	0 to 99, 9999	1	3	124
	184	AU terminal function selection	0 to 99, 9999	1	4	124
	185	JOG terminal function selection	0 to 99, 9999	1	5	124
	186	CS terminal function selection	0 to 99, 9999	1	6	124
	190	RUN terminal function selection	0 to 199, 9999	1	0	126
	191	SU terminal function selection	0 to 199, 9999	1	1	126
	192	IPF terminal function selection	0 to 199, 9999	1	2	126
	193	OL terminal function selection	0 to 199, 9999	1	3	126
	194	FU terminal function selection	0 to 199, 9999	1	4	126
	195	A, B, C terminal function selection	0 to 199, 9999	1	99	126
Additi-onal function	199	User's initial value setting	0 to 999, 9999	1	0	128

Func-tion	Parameter Number	Name	Setting Range	Minimum Setting Increments	Factory Setting	Refer To Page:
Programmed operation	200	Programmed operation minute/second selection	0 to 3	1	0	129
	201	Program set 1 1 to 10	0 to 2: Rotation direction 0 to 400, 9999:Frequency 0 to 99.59: Time	1 0.1Hz Minute or second	0 9999 0	129
	211	Program set 2 11 to 20	0 to 2: Rotation direction 0 to 400, 9999:Frequency 0 to 99.59: Time	1 0.1Hz Minute or second	0 9999 0	129
	221	Program set 3 21 to 30	0 to 2: Rotation direction 0 to 400, 9999:Frequency 0 to 99.59: Time	1 0.1Hz Minute or second	0 9999 0	129
	231	Timer setting	0 to 99.59	——	0	129
Multi-speed operation	232	Multi-speed setting (speed 8)	0 to 400Hz, 9999	0.01Hz	9999	133
	233	Multi-speed setting (speed 9)	0 to 400Hz, 9999	0.01Hz	9999	133
	234	Multi-speed setting (speed 10)	0 to 400Hz, 9999	0.01Hz	9999	133
	235	Multi-speed setting (speed 11)	0 to 400Hz, 9999	0.01Hz	9999	133
	236	Multi-speed setting (speed 12)	0 to 400Hz, 9999	0.01Hz	9999	133
	237	Multi-speed setting (speed 13)	0 to 400Hz, 9999	0.01Hz	9999	133
	238	Multi-speed setting (speed 14)	0 to 400Hz, 9999	0.01Hz	9999	133
	239	Multi-speed setting (speed 15)	0 to 400Hz, 9999	0.01Hz	9999	133
Sub functions	240	Soft-PWM setting	0, 1	1	1	133
	244	Cooling fan operation selection	0, 1	1	0	133
Stop selection function	250	Stop selection	0 to 100 sec, 9999	0.1 sec	9999	133
Sub functions	251	Output phase failure protection selection	0, 1	1	1	134
	252	Override bias	0 to 200%	0.1%	50%	134
	253	Override gain	0 to 200%	0.1%	150%	134
Power failure stop function	261	Power failure stop selection	0, 1	1	0	135
	262	Subtracted frequency at deceleration start	0 to 20Hz	0.01Hz	3Hz	135
	263	Subtraction starting frequency	0 to 120Hz, 9999	0.01Hz	60Hz<50Hz>	135
	264	Power-failure deceleration time 1	0 to 3600/0 to 360 sec	0.1 sec/ 0.01 sec	5 sec	135
	265	Power-failure deceleration time 2	0 to 3600/0 to 360 sec, 9999	0.1 sec/ 0.01 sec	9999	135
	266	Power-failure deceleration time switch-over frequency	0 to 400Hz	0.01Hz	60Hz	135
Selection function	270	Stop-on-contact/load torque high-speed frequency control selection	0, 1, 2, 3	1	0	137
High-speed frequency control	271	High-speed setting maximum current	0 to 200%	0.1%	50%	138
	272	Mid-speed setting minimum current	0 to 200%	0.1%	100%	138
	273	Current averaging range	0 to 400Hz, 9999	0.01Hz	9999	138
	274	Current averaging filter constant	1 to 4000	1	16	138
Stop on contact	275	Stop-on-contact exciting current low-speed multiplying factor (Note 5)	0 to 1000%, 9999	1%	9999	141
	276	Stop-on-contact PWM carrier frequency (Note 5)	0, 1, 2, 9999	1	9999	141

Func-tion	Parameter Number	Name	Setting Range		Minimum Setting Increments	Factory Setting		Refer To Page:
Brake sequence functions	278	Brake opening frequency (Note 3)	0 to 30Hz		0.01Hz	3Hz		144
	279	Brake opening current (Note 3)	0 to 200%		0.1%	130%		144
	280	Brake opening current detection time (Note 3)	0 to 2 sec		0.1 sec	0.3 sec		144
	281	Brake operation time at start (Note 3)	0 to 5 sec		0.1 sec	0.3 sec		144
	282	Brake operation frequency (Note 3)	0 to 30Hz		0.01Hz	6Hz		144
	283	Brake operation time at stop (Note 3)	0 to 5 sec		0.1 sec	0.3 sec		144
	284	Deceleration detection function selection (Note 3)	0, 1		1	0		144
	285	Over speed detection frequency	0 to 30Hz, 9999		0.01Hz	9999		144
	286	Droop gain	0 to 100%		0.01%	0%		148
	287	Droop filter time constant	0 to 1.00sec		0.01sec	0.3sec		148
Sub function	571	Start holding time	0 to 10 sec, 9999		0.1 sec	9999		149
Calibration functions	900	FM terminal calibration	——		——	——		150
	901	AM terminal calibration	——		——	——		150
	902	Frequency setting voltage bias	0 to 10V	0 to 60Hz	0.01Hz	0V	0Hz	152
	903	Frequency setting voltage gain	0 to 10V	1 to 400Hz	0.01Hz	5V	60Hz <50Hz>	152
	904	Frequency setting current bias	0 to 20mA	0 to 60Hz	0.01Hz	4mA	0Hz	152
	905	Frequency setting current gain	0 to 20mA	1 to 400Hz	0.01Hz	20mA	60Hz <50Hz>	152
Additional function	990	Buzzer control	0, 1		1	1		154
	991	Parameter unit parameters	Refer to the parameter unit instruction manual for details.					

Note: 1. Indicates the parameter settings which are ignored when the advanced magnetic flux vector control mode is selected.
2. The half-tone screened parameters allow their settings to be changed during operation if 0 (factory setting) has been set in Pr. 77. (Note that the Pr. 72 and Pr. 240 settings cannot be changed during external operation.)
3. Can be set when Pr. 80, 81 ≠ 9999, Pr. 60 = 7 or 8.
4. Can be accessed when Pr. 80, 81 ≠ 9999, Pr. 77 = 801.
5. Can be accessed when Pr. 270 = 1 or 3, Pr. 80, 81 ≠ 9999.
6. The setting range and min. setting unit will differ according to the Pr. 71 "applied motor" setting value.
7. Can be accessed when Pr. 29 = 3.

4.2 Parameter Function Details

Pr. 0 "torque boost"

Pr. 46 "second torque boost"

Pr. 112 "third torque boost"

Related parameters

Pr. 3 "base frequency"
Pr. 19 "base frequency voltage"
Pr. 71 "applied motor"
Pr. 80 "motor capacity"
Pr. 81 "number of motor poles"
Pr. 180 to Pr. 186
(input terminal function selection)

You can compensate for a voltage drop in the low frequency range to improve motor torque reduction in the low speed range.

- Motor torque in the low-frequency range can be adjusted to the load to increase the starting motor torque.
- You can select any of the three different starting torque boosts by terminal switching.

Parameter Number	Factory Setting	Setting Range	Remarks
0	1%	0 to 30%	——
46	9999	0 to 30%, 9999	9999: Function invalid
112	9999	0 to 30%, 9999	9999: Function invalid

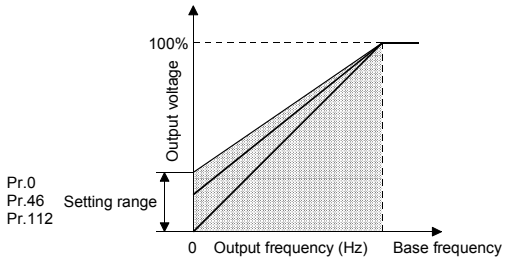

<Setting>

- Assuming that the base frequency voltage is 100%, set the 0Hz voltage in %.
- A large setting will cause the motor to overheat.
- Pr. 46 is valid when the RT signal is on. Pr. 112 is valid when the X9 signal is on. Use any of Pr. 180 to Pr. 186 to assign the terminal used to input the X9 signal. If RT.X9 turns ON simultaneously, Pr.46 will have the priority.

Note:
1. This parameter setting is ignored when Pr. 80 and Pr. 81 have been set to select the advanced magnetic flux vector control mode.
2. Increase the setting when the inverter-to-motor distance is long or motor torque in the low-speed range is insufficient, for example. A too large setting may result in an overcurrent trip.
3. When the RT (X9) signal is on, the other second (third) functions such as second (third) acceleration/deceleration time are also selected.
4. When terminal assignment is changed using Pr. 180 to 186 during use of the second or third functions, the other functions may be affected. Check the functions of the corresponding terminals before making setting.

Pr. 1 "maximum frequency"

Pr. 2 "minimum frequency"

Pr. 18 "high-speed maximum frequency"

Related parameters

Pr. 903 "frequency setting voltage gain"
Pr. 905 "frequency setting current gain"

Used to clamp the upper and lower limits of the output frequency.

- Can be used to set the upper and lower limits of motor speed.

Parameter Number	Factory Setting	Setting Range
1	60Hz	0 to 60Hz
2	0Hz	0 to 120Hz
18	60Hz	0 to 400Hz

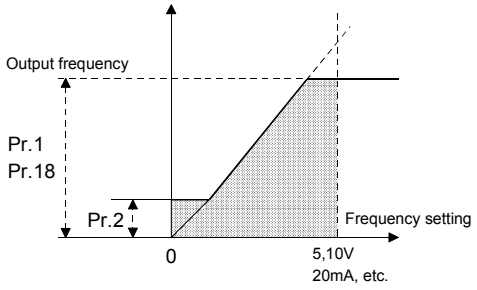

<Setting>

- Use Pr. 1 to set the upper limit of the output frequency. If the frequency of the frequency command entered is higher than the setting, the output frequency is clamped at the maximum frequency.
  To perform operation over 60Hz, set the upper limit of the output frequency in Pr. 18.
  (When the Pr. 18 value is set, Pr. 1 automatically changes to the frequency in Pr. 18.)
- Use Pr. 2 to set the lower limit of the output frequency.

Note: When the frequency setting analog signal is used to run the motor beyond 60Hz, change the Pr. 903 and Pr. 905 values. If Pr. 1 or Pr. 18 is only changed, the motor cannot run beyond 60Hz.

⚠ CAUTION

When the Pr. 2 setting is higher than the Pr. 13 value, note that the motor will run at the set frequency by merely switching the start signal on, without entering the command frequency.

Pr. 3 "base frequency"

Pr. 19 "base frequency voltage"

Pr. 47 "second V/F (base frequency)

Pr. 113 "third V/F (base frequency)

Related parameters

Pr. 71 "applied motor"
Pr. 80 "motor capacity"
Pr. 81 "number of motor poles"
Pr. 83 "rated motor voltage"
Pr. 84 "rated motor frequency"
Pr. 180 to Pr. 186 (input terminal function selection)

Used to adjust the inverter outputs (voltage, frequency) to the motor rating.

- When running a standard motor, generally set the frequency rating to 60Hz. When running the motor using the commercial power supply-inverter switch-over, set the base frequency to the same value as the power supply frequency.

Parameter Number	Factory Setting	Setting Range	Remarks
3	60Hz<50Hz>	0 to 400Hz	
19	9999<8888>	0 to 1000V, 8888, 9999	8888: 95% of power supply voltage 9999: Same as power supply voltage
47	9999	0 to 400Hz, 9999	9999: Function invalid
113	9999	0 to 400Hz, 9999	9999: Function invalid

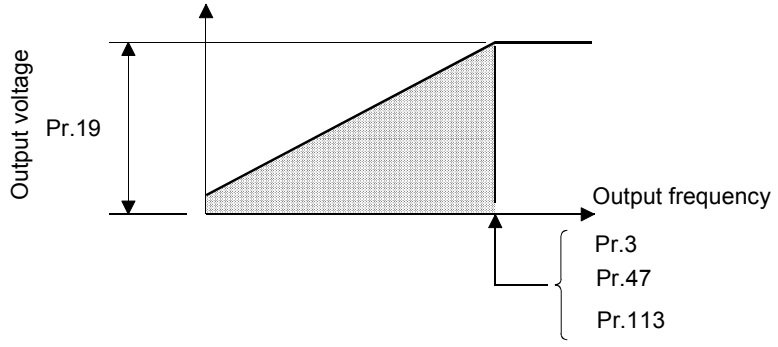

<Setting>

- Use Pr. 3, Pr. 47 and Pr. 113 to set the base frequency (rated motor frequency). Three different base frequencies can be set and the required frequency can be selected from among them.
- Pr. 47 is valid when the RT signal is on, and Pr. 113 is valid when the X9 signal is on. Use any of Pr. 180 to Pr. 186 to assign the terminal used to input the X9 signal.
- Use Pr. 19 to set the base voltage (e.g. rated motor voltage).

Note:
1. When the advanced magnetic flux vector control mode has been selected using Pr. 80 and Pr. 81, Pr. 3, 47, 113 and Pr. 19 are made invalid and Pr. 84 and Pr. 83 are made valid.
2. When "2" (5-point flexible V/F characteristics) is set in Pr. 71, the Pr. 47 and Pr. 113 settings are made invalid.
3. When the RT (X9) signal is on, the other second (third) functions such as second (third) acceleration/deceleration time are also selected.
4. When terminal assignment is changed using Pr. 180 to 186 during use of the second or third functions, the other functions may be affected. Check the functions of the corresponding terminals before making setting.

Pr. 4 "3-speed setting (high speed)"

Pr. 5 "3-speed setting (middle speed)"

Pr. 6 "3-speed setting (low speed)"

Pr. 24 to Pr. 27 "multi-speed setting (speeds 4 to 7)"

Pr. 232 to Pr. 239 "multi-speed setting (speeds 8 to 15)"

Related parameters

Pr. 1 "maximum frequency"
Pr. 2 "minimum frequency"
Pr. 15 "jog frequency"
Pr. 28 "multi-speed input compensation"
Pr. 29 "acceleration/deceleration pattern"
Pr. 79 "operation mode selection"
Pr. 180 to Pr. 186 (input terminal function selection)

Used to preset the running speeds in parameters and switch between them using terminals.

- Any speed can be selected by switching on-off the external contact signal (RH, RM, RL or REX signal).
- By using these functions with jog frequency (Pr. 15), maximum frequency (Pr. 1) and minimum frequency (Pr. 2), up to 18 speeds can be set.
- Valid in the external operation mode or in the PU/external combined mode ("3" or "4" set in Pr. 79).

Parameter Number	Factory Setting	Setting Range	Remarks
4	60Hz	0 to 400Hz	
5	30Hz	0 to 400Hz	
6	10Hz	0 to 400Hz	
24 to 27	9999	0 to 400Hz, 9999	9999: Not selected
232 to 239	9999	0 to 400Hz, 9999	9999: Not selected

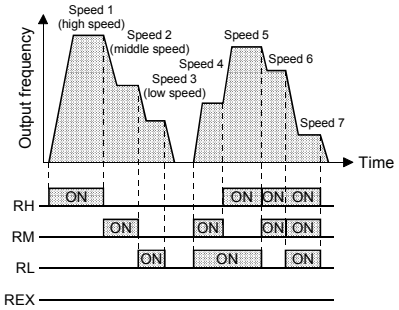

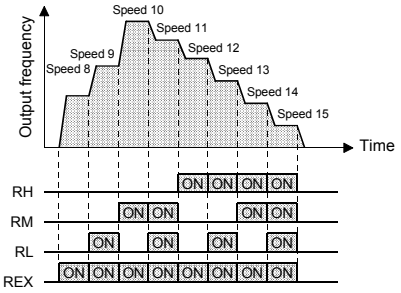

<Setting>

- Set the running frequencies in the corresponding parameters.
- Each speed (frequency) can be set as desired between 0 and 400Hz during inverter operation.
  After the required multi-speed setting parameter has been read, the setting can be changed by pressing the [UP/DOWN] key. (In this case, when you release the [UP/DOWN] key, press the [SET] key to store the set frequency. When using the FR-PU04 (option), press the [WRITE] key.)
- Use any of Pr. 180 to Pr. 186 to assign the terminal used to input the REX signal.

Note:
1. The multi-speed settings override the main speeds (across terminals 2-5, 4-5).
2. The multi-speeds can also be set in the PU or external operation mode.
3. For 3-speed setting, if two or three speeds are simultaneously selected, priority is given to the frequency setting of the lower signal.
4. Pr. 24 to Pr. 27 and Pr. 232 to Pr. 239 settings have no priority between them.
5. The parameter values can be changed during operation.
6. When terminal assignment is changed using Pr. 180 to 186, the other functions may be affected. Check the functions of the corresponding terminals before making setting.

Pr. 7 "acceleration time"

Pr. 8 "deceleration time"

Pr. 20 "acceleration/deceleration reference frequency"

Pr. 21 "acceleration/deceleration time increments"

Pr. 44 "second acceleration/deceleration time"

Pr. 45 "second deceleration time"

Pr. 110 "third acceleration/deceleration time"

Pr. 111 "third deceleration time"

Related parameters

Pr. 3 "base frequency"
Pr. 29 "acceleration/deceleration pattern"
Pr. 180 to Pr. 186 (input terminal function selection)

Used to set motor acceleration/deceleration time.
Set a larger value for a slower speed increase/decrease or a smaller value for a faster speed increase/decrease.

Parameter Number	Factory Setting	Setting Range	Remarks
7	15 sec	0 to 3600 sec/0 to 360 sec	
8	15 sec	0 to 3600 sec/0 to 360 sec	
20	60Hz<50Hz>	1 to 400Hz	
21	0	0, 1	0: 0 to 3600 sec, 1: 0 to 360 sec
44	15 sec	0 to 3600 sec/0 to 360 sec	
45	9999	0 to 3600 sec/0 to 360 sec, 9999	9999: Acceleration time = deceleration time
110	9999	0 to 3600 sec/0 to 360 sec, 9999	9999: Function invalid
111	9999	0 to 3600 sec/0 to 360 sec, 9999	9999: Acceleration time = deceleration time

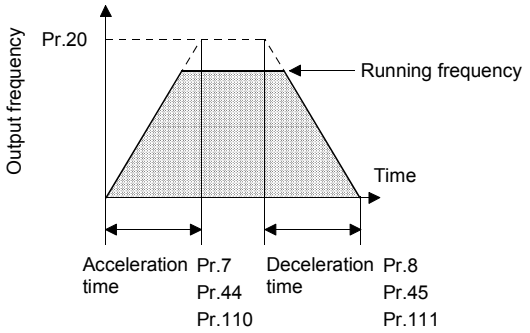

<Setting>

- Use Pr. 21 to set the acceleration/deceleration time and minimum setting increments:
  Set value "0" (factory setting) ···· 0 to 3600 seconds (minimum setting increments: 0.1 seconds)
  Set value "1" ····· 0 to 360 seconds (minimum setting increments: 0.01 seconds)
- Use Pr. 7, Pr. 44 and Pr. 110 to set the acceleration time required to reach the frequency set in Pr. 20 from 0Hz.
- Use Pr. 8, Pr. 45 and Pr. 111 to set the deceleration time required to reach 0Hz from the frequency set in Pr. 20.
- Pr. 44 and Pr. 45 are valid when the RT signal is on, and Pr. 110 and Pr. 111 are valid when the X9 signal is on. When both RT and X9 are on, Pr. 110 and Pr. 111 are valid.
- Use any of Pr. 180 to Pr. 186 to assign the terminal used to input the X9 signal.
- Set "9999" in Pr. 45 and Pr. 111 to make the deceleration time equal to the acceleration time (Pr. 44, Pr. 110).
- When "9999" is set in Pr. 110, the function is made invalid.

Note: 1. In S-shaped acceleration/deceleration pattern A (refer to page 58), the set time is a period required to reach the base frequency set in Pr. 3.

- Acceleration/deceleration time calculation expression when the set frequency is the base frequency or higher

$$t = \frac{4}{9} \times \frac{T}{(Pr.3)^2} \times f^2 + \frac{5}{9} T$$

T: Acceleration/deceleration time setting (seconds)
f: Set frequency (Hz)

- Guideline for acceleration/deceleration time at the base frequency of 60Hz (0Hz to set frequency)

Frequency setting (Hz) / Acceleration/ decelerationtime (seconds)	60	120	200	400
5	5	12	27	102
15	15	35	82	305

2. If the Pr. 20 setting is changed, the settings of calibration functions Pr. 903 and Pr. 905 (frequency setting signal gains) remain unchanged. To adjust the gains, adjust calibration functions Pr. 903 and Pr. 905.
3. When the setting of Pr. 7, 8, 44, 45, 110 or 111 is "0", the acceleration/deceleration time is 0.04 seconds. At this time, set 120Hz or less in Pr. 20.
4. When the RT (X9) signal is on, the other second (third) functions such as second (third) torque boost are also selected.
5. If the shortest acceleration/deceleration time is set, the actual motor acceleration/deceleration time cannot be made shorter than the shortest acceleration/deceleration time determined by the mechanical system's GD^2 and motor torque.

Pr. 9 "electronic overcurrent protection"

Related parameter
Pr. 71 "applied motor"

Set the current of the electronic overcurrent protection to protect the motor from overheat. This feature provides the optimum protective characteristics, including reduced motor cooling capability, at low speed.

Parameter Number	Factory Setting	Setting Range
9	Rated output current	0 to 3600A

<Setting>

- Set the rated current [A] of the motor.
- Setting of "0" makes the electronic overcurrent protection (motor protective function) invalid. (The inverter's output transistor protective function is valid.)
- When Mitsubishi's constant-torque motor is used, set "1" or any of "13" to "18" in Pr. 71 to select the 100% continuous torque characteristic in the low speed range. Then, set the rated motor current in Pr. 9.

Note: 1. When two or more motors are connected to the inverter, they cannot be protected by the electronic overcurrent protection. Install an external thermal relay to each motor.
2. When a difference between the inverter and motor capacities is large and the setting is small, the protective characteristics of the electronic overcurrent protection will be deteriorated. In this case, use an external thermal relay.
3. A special motor cannot be protected by the electronic overcurrent protection. Use an external thermal relay.
4. When using the sine wave filter, the motor cannot be protected with the electronic overcurrent protection. Use external overcurrent protection.

Pr. 10 "DC dynamic brake operation frequency"

Pr. 11 "DC dynamic brake operation time"

Pr. 12 "DC dynamic brake voltage"

Related parameters

Pr. 13 "starting frequency"
Pr. 71 "applied motor"

By setting the stopping DC dynamic brake voltage (torque), operation time and operation starting frequency, the stopping accuracy of positioning operation, etc. or the timing of operating the DC dynamic brake to stop the motor is adjusted according to the load.

Parameter Number	Factory Setting	Setting Range	Remarks
10	3Hz	0 to 120Hz, 9999	9999: Operated at or below Pr. 13 value.
11	0.5 sec	0 to 10 sec, 8888	8888: Operated when X13 signal switches on.
12	1%	0 to 30%	

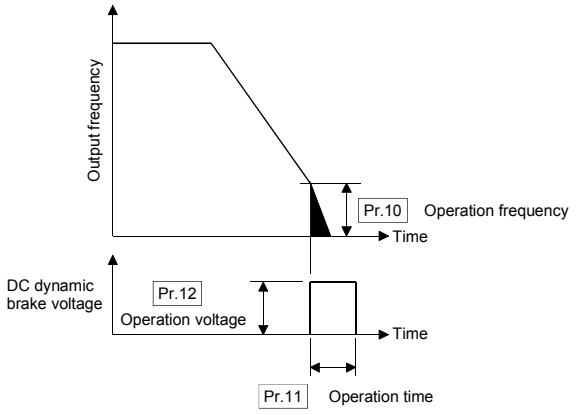

<Setting>

- Use Pr. 10 to set the frequency at which the DC dynamic brake application is started.
  By setting "9999" in Pr. 10, the motor is decelerated to the frequency set in Pr. 13 and braked.
- Use Pr. 11 to set the period during when the brake is operated. By setting “8888” in Pr. 11, the DC dynamic brake is operated while the X13 signal is on.
- Use any of Pr. 180 to Pr. 186 to assign the terminal used to input the X13 signal.
- Use Pr. 12 to set the percentage of the power supply voltage.

⚠ CAUTION

⚠ In the orientation (using option) mode, do not set "8888" in Pr. 11.
The motor may not be stopped in the correct position.
⚠ Install a mechanical brake. No holding torque is provided.

Pr. 13 "starting frequency"

You can set the starting frequency between 0 and 60Hz.

- Set the starting frequency at which the start signal is switched on.

Parameter Number	Factory Setting	Setting Range
13	0.5Hz	0.01 to 60Hz

<Setting>

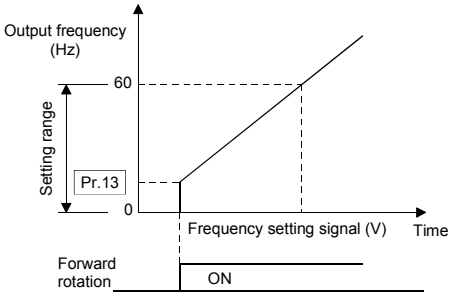

Note: The inverter will not start if the frequency setting signal is less than the value set in Pr. 13 "starting frequency".
For example, when 5Hz is set in Pr. 13, the motor will start running when the frequency setting signal reaches 5Hz.

Related parameters

Pr. 0 "torque boost"
Pr. 80 "motor capacity"
Pr. 81 "number of motor poles"
Pr. 180 to Pr. 186
(input terminal function selection)

Pr. 14 "load pattern selection"

You can select the optimum output characteristic (V/F characteristic) for the application and load characteristics.

Parameter Number	Factory Setting	Setting Range
14	0	0 to 5

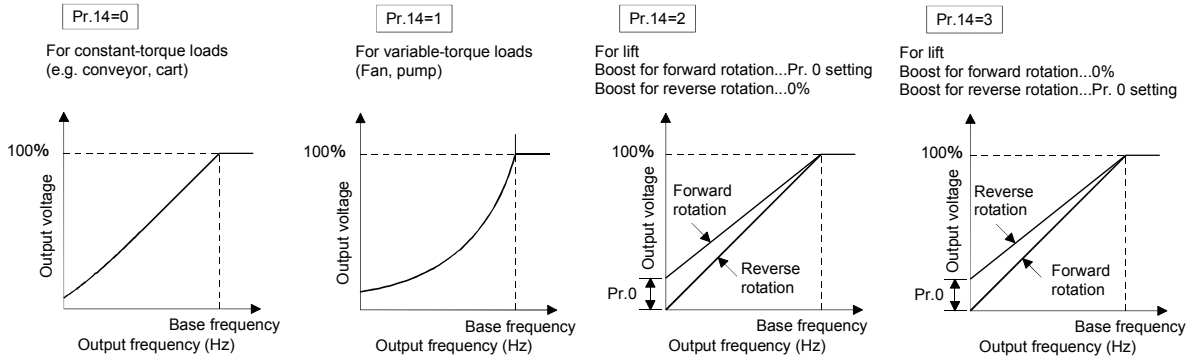

Setting	Output Characteristics			Application
0	For constant-torque load			Conveyor, cart, etc.
1	For variable-torque load			Fan, pump
2	For constant-torque lift	Boost for reverse rotation 0%	Boost for forward rotation...Pr. 0 setting	For lift load
3		Boost for forward rotation 0%	Boost for reverse rotation...Pr. 0 setting	
4	RT signal	ON...For constant-torque load (same as in setting = 0)		Load pattern selection switching function using RT signal
		OFF...For constant-torque lift, boost for reverse rotation 0% (same as in setting = 2)		
5	RT signal	ON...For constant-torque load (same as in setting = 0)		
		OFF...For constant-torque lift, boost for forward rotation 0% (same as in setting = 3)		

Note: 1. This parameter setting is ignored when Pr. 80 and Pr. 81 have been set to select the advanced magnetic flux vector control mode.
2. When the RT signal is on, the other second functions such as second acceleration/deceleration time and second torque boost are also selected.
3. When the setting is 4 or 5, X17 signal may be used instead of the RT signal. Use any of Pr. 180 to Pr. 186 to assign the terminal used to input the X17 signal.
4. If the base frequency is set to 180Hz or more with Pr. 3, the reduction load torque setting will be ignored.

Pr. 15 "jog frequency"

Pr. 16 "jog acceleration/deceleration time"

Related parameters

Pr. 20 "acceleration/deceleration reference frequency"
Pr. 21 "acceleration/deceleration time increments"
Pr. 79 "operation mode selection"
Pr. 180 to Pr. 186 (input terminal function selection)

In the external operation mode, jog operation can be started and stopped with the start signal (STF, STR) after selection of the jog mode (JOG signal ON). In the PU operation mode, jog operation can also be performed using the PU (FR-DU04/FR-PU04).

- Set the frequency and acceleration/deceleration time for jog operation

Parameter Number	Factory Setting	Setting Range	Remarks
15	5Hz	0 to 400Hz	
16	0.5sec	0 to 3600 sec	When Pr. 21 = 0
		0 to 360 sec	When Pr. 21 = 1

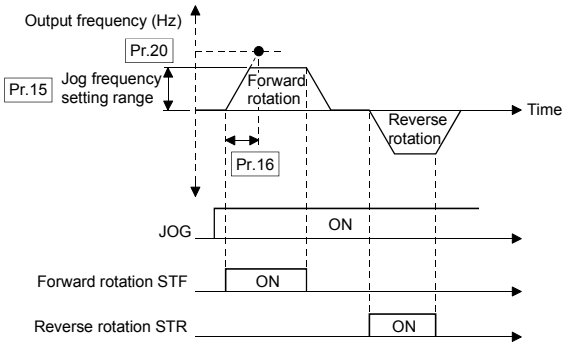

Note: 1. In S-shaped acceleration/deceleration pattern A, the set time is a period of time required to reach Pr. 3 "base frequency".
2. The acceleration time and deceleration time cannot be set separately for jog operation.

Pr. 17 "MRS input selection"

Used to select the logic of the MRS signal.
When the MRS signal switches on, the inverter shuts off the output.

Parameter Number	Factory Setting	Setting Range
17	0	0, 2

<Setting>

Pr. 17 Setting	Specifications of MRS Signal
0	Normally open input
2	Normally closed input (N/C contact input specifications)

<Wiring example>

・ For sink logic

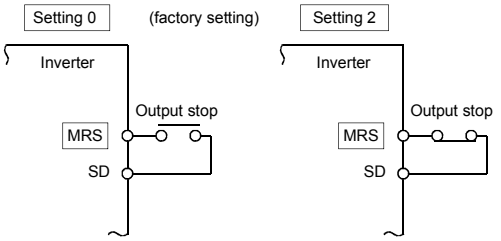

Pr. *18 ⇒ Refer to Pr. 1, Pr. 2.*

Pr. 19 ⇒ Refer to Pr. 3.

Pr. 20, Pr. 21 ⇒ Refer to Pr.7.

Pr. 22 "stall prevention operation level"

Pr. 23 "stall prevention operation level at double speed"

Pr. 66 "stall prevention operation level reduction starting frequency"

Pr. 148 "stall prevention operation level at 0V input"

Pr. 149 "stall prevention operation level at 10V input"

Pr. 154 "voltage reduction selection during stall prevention operation"

Related parameters

Pr. 48 "second stall prevention operation current"
Pr. 49 "second stall prevention operation frequency"
Pr. 73 "0-5V/0-10V selection"
Pr. 114 "third stall prevention operation current"
Pr. 115 "third stall prevention operation frequency"
Pr. 156 "stall prevention operation selection"

- You can set the stall prevention operation levels.
- For high-speed operation at or over 60Hz<50Hz>, acceleration may not be made because the motor current does not increase. To improve the operation characteristics of the motor in such a case, the stall prevention level in the high-frequency range can be reduced. This is effective for operation of a centrifugal separator up to the high-speed range. Normally, set 60Hz<50Hz> in Pr. 66 and 100% in Pr. 23.
- For operation in the high-frequency range, the current in the locked motor state is smaller than the rated output current of the inverter and the inverter does not result in an alarm (protective function is not activated) if the motor is at a stop. To improve this and activate the alarm, the stall prevention level can be reduced.
- In order to provide torque during stall prevention, Pr. 154 is factory-set not to reduce the output voltage. The setting of reducing the output voltage further decreases the probability of overcurrent trip occurrence.
- The stall prevention operation level can be varied by entering the analog signal into terminal 1.

Parameter Number	Factory Setting	Setting Range	Remarks
22	150%	0 to 200%, 9999	9999: Analog variable
23	9999	0 to 200%, 9999	9999: Constant according to Pr. 22
66	60Hz<50Hz>	0 to 400Hz	
148	150%	0 to 200%	(Bias)
149	200%	0 to 200%	(Gain)
154	1	0, 1	0: Output voltage reduced 1: Output voltage not reduced

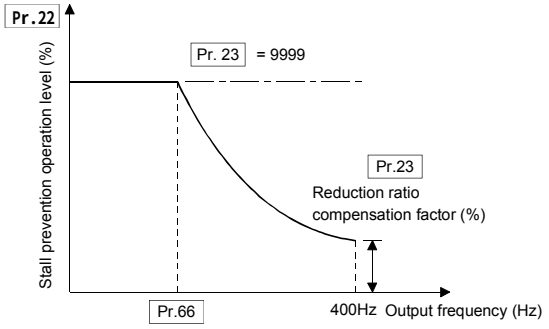

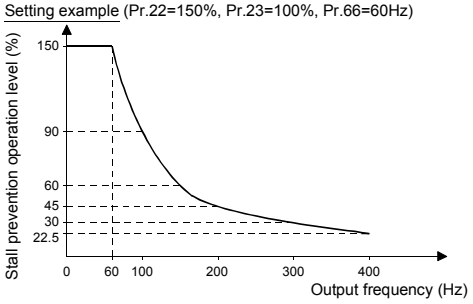

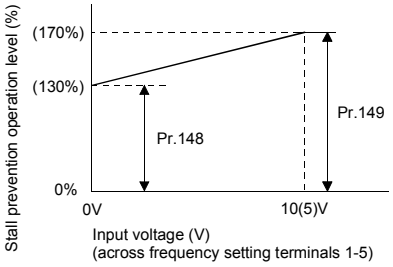

<Setting>

- In Pr. 22, set the stall prevention operation level. Normally set it to 150% (factory setting). Set “0” in Pr. 22 to disable the stall prevention operation.
- To reduce the stall prevention operation level in the high-frequency range, set the reduction starting frequency in Pr. 66 and the reduction ratio compensation factor in Pr. 23.

Calculation expression for stall prevention operation level

$$\text{Stall prevention operation level (\%)} = A + B \times \left[\frac{\text{Pr.22-A}}{\text{Pr.22-B}}\right] \times \left[\frac{\text{Pr.23-100}}{100}\right]$$

$$\text{where, } A = \frac{\text{Pr.66 (Hz)} \times \text{Pr.22 (\%)}}{\text{output frequency (Hz)}},\quad B = \frac{\text{Pr.66 (Hz)} \times \text{Pr.22(\%)}}{400\text{Hz}}$$

- By setting "9999" (factory setting) in Pr. 23, the stall prevention operation level is constant at the Pr. 22 setting up to 400Hz.
- Set "9999" in Pr. 22 to vary the stall prevention operation level using the analog signal (0-5V/0-10V) entered to the frequency setting auxiliary input terminal [1]. (Use Pr. 73 to select between 10V and 5V.)
- Use Pr. 148 and Pr. 149 to adjust the gain and bias of the analog signal.
- Set "0" in Pr. 154 to reduce the output voltage during stall prevention operation.

Note: 1. When Pr. 22 = "9999", terminal 1 is exclusively used for setting the stall prevention operation level. The auxiliary input and override functions are not activated.

⚠ CAUTION

⚠ Do not set a too small value as the stall prevention operation current. Otherwise, torque generated will reduce.

⚠ Test operation must be performed. Stall prevention operation during acceleration may increase the acceleration time.
Stall prevention operation during constant speed may change the speed suddenly.
Stall prevention operation during deceleration may increase the deceleration time, increasing the deceleration distance.

Pr. 24 to Pr. 27 ⇒ Refer to Pr. 4 to Pr. 6.

Related parameters
Pr. 59 "remote setting function"
Pr. 73 "0-5V/0-10V selection"

Pr. 28 "multi-speed input compensation"

By entering a compensation signal into the frequency setting auxiliary input terminal 1 (Note 2), the speeds (frequencies) of multi-speed settings or the speed setting made by remote setting function can be compensated for.

Parameter Number	Factory Setting	Setting Range	Remarks
28	0	0, 1	0: Not compensated, 1: Compensated

Note: 1. Use Pr. 73 to select the compensation input voltage between 0-±5V and 0-±10V.
2. When any of "4, 5, 14 and 15" is set in Pr. 73, the compensation signal is entered into terminal 2. (Override functions)

Pr. 29 "acceleration/deceleration pattern"

Pr. 140 "backlash acceleration stopping frequency"

Pr. 141 "backlash acceleration stopping time"

Pr. 142 "backlash deceleration stopping frequency"

Pr. 143 "backlash deceleration stopping time"

Related parameters

Pr. 3 "base frequency"
Pr. 7 "acceleration time"
Pr. 8 "deceleration time"
Pr. 20 "acceleration/deceleration reference frequency"
Pr. 44 "second acceleration/deceleration time"
Pr. 45 "second deceleration time"
Pr. 110 "third acceleration/deceleration time"
Pr. 111 "third deceleration time"

Set the acceleration/deceleration pattern.
Also, you can suspend acceleration/deceleration at set frequencies and for the time period set in the parameters.

Parameter Number	Factory Setting	Setting Range	Remarks
29	0	0 to 3	3: Backlash compensation
140	1.00Hz	0 to 400Hz	Valid when Pr. 29 = 3.
141	0.5 sec	0 to 360 sec	Valid when Pr. 29 = 3.
142	1.00Hz	0 to 400Hz	Valid when Pr. 29 = 3.
143	0 sec	0 to 360 sec	Valid when Pr. 29 = 3.

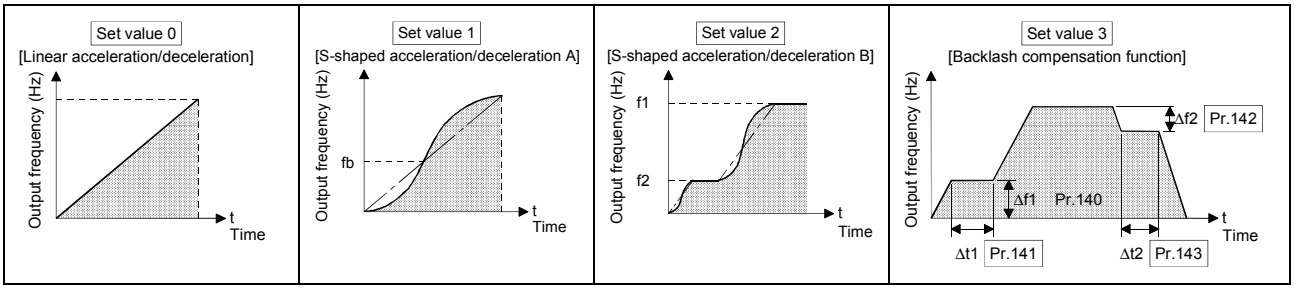

<Setting>

Pr. 29 Setting	Function	Description
0	Linear acceleration/deceleration	Linear acceleration/deceleration is made up/down to the preset frequency (factory setting).
1	S-shaped acceleration/deceleration A (Note 1)	For machine tool spindles This setting is used when it is necessary to make acceleration/deceleration in a short time up to the 60Hz or higher speed range. In this acceleration/deceleration pattern, fb (base frequency) is always the inflection point of an S shape, and you can set the acceleration/deceleration time according to the reduction in motor torque in the 60Hz or higher constant-output operation range.
2	S-shaped acceleration/deceleration B	Prevention of cargo collapse on conveyor, etc. This setting provides S-shaped acceleration/deceleration from f2 (current frequency) to f1 (target frequency), easing an acceleration/deceleration shock. This pattern has an effect on the prevention of cargo collapse, etc.
3	Backlash compensation (Note 2, 3)	Backlash compensation for reduction gear, etc. This function stops the speed change temporarily during acceleration/deceleration, reducing a shock generated when a reduction gear backlash is eliminated suddenly. Use Pr. 140 to 143 to set the stopping times and stopping frequencies in accordance with the above diagrams.

Note: 1. For the acceleration/deceleration time, set the time required to reach the "base frequency" in Pr. 3, not the "acceleration/deceleration reference frequency" in Pr. 20. For details, refer to Pr. 7 and Pr. 8.
2. Pr. 140 to Pr. 143 is accessible when "3" is set in Pr. 29.
3. The acceleration/deceleration time is increased by the stopping time.

Pr. 30 "regenerative function selection"

Pr. 70 "special regenerative brake duty"

Related parameters

Pr. 180 "RL terminal function selection"
Pr. 181 "RM terminal function selection"
Pr. 182 "RH terminal function selection"
Pr. 183 "RT terminal function selection"
Pr. 184 "AU terminal function selection"
Pr. 185 "JOG terminal function selection"
Pr. 186 "CS terminal function selection"

- Use the optional "high power factor converter (MT-HC)" to reduce harmonics, improve the power factor, or continue the regenerative mode.

Parameter Number	Factory Setting	Setting Range	Remarks
30	0	0 to 2	0 : No regenerative function
70	0%	0 to 100%	

<Setting>

(1) When using the brake unit (MT-BU5)

・ Set “1” in Pr. 30.

At this time, set the regenerative brake duty to 10% (Pr. 70).

(2) When using the power return converter (MT-RC)

・ Set “1” in Pr. 30.
・ Set “10%” in Pr. 70.

(3) When using the high power factor converter (MT-HC)

1) Set “2” in Pr. 30.
2) Use any of Pr. 180 to Pr. 186 to assign the following signals to the contact input terminals.
   ・ X10: MT-HC connection (inverter operation enable signal) (Note 3)
   To make protective coordination with the high power factor converter (MT-HC), use the inverter operation enable signal to shut off the inverter output. Enter the RDY signal of the high power factor converter.
   ・ X11: MT-HC connection (instantaneous power failure detection signal)
   When the computer link inboard option (FR-A5NR) is used and the setting is made to hold the pre-instantaneous power failure mode, use this signal to hold that mode. Enter the instantaneous power failure detection signal of the high power factor converter.
3) The Pr. 70 setting is made invalid.
   Set "10" and "11" in any of Pr. 180 to Pr. 186 to allocate the terminals used to input the X10 and X11 signals.

Note: 1. Pr. 70 "regenerative brake duty" indicates the %ED of the brake transistor operation.
The setting should not be higher than the permissible value of the brake resistor used. Otherwise, the resistor can overheat.
2. The X10 signal may be replaced by the MRS signal.
3. When terminal assignment is changed using Pr. 180 to 186, the other functions may be affected. Check the functions of the corresponding terminals before making setting.

⚠ WARNING

⚠ **The value set in Pr. 70 must not exceed the permissible value of the brake resistor used. Otherwise, the resistor can overheat.**

Pr. 31 "frequency jump 1A"

Pr. 32 "frequency jump 1B"

Pr. 33 "frequency jump 2A"

Pr. 34 "frequency jump 2B"

Pr. 35 "frequency jump 3A"

Pr. 36 "frequency jump 3B"

- When it is desired to avoid resonance attributable to the natural frequency of a mechanical system, these parameters allow resonant frequencies to be jumped. Up to three areas may be set, with the jump frequencies set to either the top or bottom point of each area.
- The value set to 1A, 2A or 3A is a jump point and operation is performed at this frequency.

Parameter Number	Factory Setting	Setting Range	Remarks
31	9999	0 to 400Hz, 9999	9999: Function invalid
32	9999	0 to 400Hz, 9999	9999: Function invalid
33	9999	0 to 400Hz, 9999	9999: Function invalid
34	9999	0 to 400Hz, 9999	9999: Function invalid
35	9999	0 to 400Hz, 9999	9999: Function invalid
36	9999	0 to 400Hz, 9999	9999: Function invalid

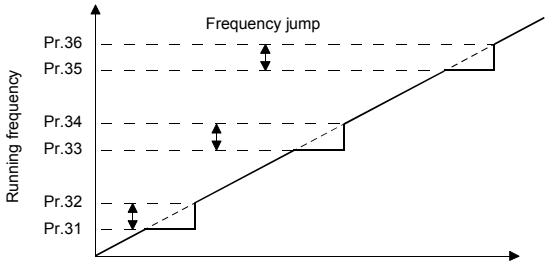

<Setting>

・ To fix the frequency at 30Hz between Pr. 33 and Pr. 34 (30Hz and 35Hz), set 35Hz in Pr. 34 and 30Hz in Pr. 33.

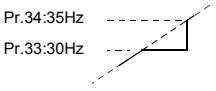

・ To jump to 35Hz between 30 and 35Hz, set 35Hz in Pr. 33 and 30Hz in Pr. 34.

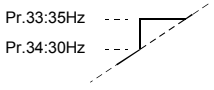

Note: 1. During acceleration/deceleration, the running frequency within the set area is valid.

Pr. 37 "speed display"

Pr. 144 "speed setting switch-over"

Related parameters

Pr. 52 "PU main display data selection"
Pr. 53 "PU level display data selection"
Pr. 80 "motor capacity"
Pr. 81 "number of motor poles"

The units of the running speed monitor display of the PU (FR-DU04/FR-PU04), the running speed setting in the PU operation mode, and the parameter setting used for frequency setting can be changed from the frequency to the motor speed or machine speed.

Parameter Number	Factory Setting	Setting Range	Remarks
37	0	0, 1 to 9998	0: Frequency setting added
144	4	0, 2, 4, 6, 8, 10, 102, 104, 106, 108, 110	

<Setting>

- To display the machine speed, set in Pr. 37 the machine speed for 60Hz operation.
- To display the motor speed, set the number of motor poles (2, 4, 6, 8, 10) or the number of motor poles plus 100 (102, 104, 106, 108, 110) in Pr. 144.
- When values have been set in both Pr. 37 and Pr. 144, priority is as follows:
  Pr. 144 = 102 to 110 > Pr. 37 = 1 to 9998 > Pr. 144 = 2 to 10
  Hence, the half-tone screened settings in the following list become valid.
- When the running speed monitoring has been selected, the parameter setting unit and the running speed setting unit in the PU operation mode depend on the combination of the Pr. 37 and Pr. 144 settings as indicated below:

Running Speed Monitor Display	Parameter Setting Unit Running Speed Setting Unit	Pr. 37 Setting	Pr. 144 Setting
Speed of 4-pole motor (r/min)	Hz	0	0
Motor speed (r/min)		0	2 to 10
		1 to 9998	102 to 110
	r/min	0	102 to 110
Machine speed	Hz	1 to 9998	0
	r/min	1 to 9998	2 to 10

Note: 1. In the V/F control mode, the motor speed is converted from the output frequency and does not match the actual speed. When the advanced magnetic flux vector control mode has been selected in Pr. 80 and 81, this display shows the aspeed (estimated value found by motor slippage calculation).
2. During PLG feedback control, the data displayed is the same as in advanced magnetic flux vector control. Note that the speed displayed is the actual speed from the PLG.
3. When the running speed display has been selected with "0" set in Pr. 37 and "0" in Pr. 144, the monitor display shows the speed reference for a 4-pole motor (1800r/min is displayed at 60Hz).
4. To change the PU main monitor (PU main display) or PU level meter (PU level display), refer to Pr. 52 and Pr. 53.
5. As the operation panel display is 4 digits, "----" is displayed when the monitored value exceeds "9999".

⚠ CAUTION

⚠ Make sure that the running speed and number of poles set are correct.
Otherwise, the motor might run at extremely high speed, damaging the machine.

Pr. 41 "up-to-frequency sensitivity"

Related parameters

Pr. 190 "RUN terminal function selection"
Pr. 191 "SU terminal function selection"
Pr. 192 "IPF terminal function selection"
Pr. 193 "OL terminal function selection"
Pr. 194 "FU terminal function selection"
Pr. 195 "ABC terminal function selection"

The ON range of the up-to-frequency signal (SU) output when the output frequency reaches the running frequency can be adjusted between 0 and ±100% of the running frequency.
This parameter can be used to ensure that the running frequency has been reached or used as the operation start signal etc. for related equipment.

Parameter Number	Factory Setting	Setting Range
41	10%	0 to 100%

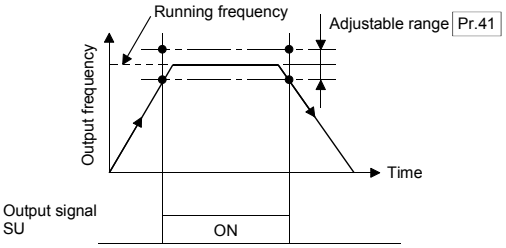

Pr. 42 "output frequency detection"

Pr. 43 "output frequency detection for reverse rotation"

Pr. 50 "second output frequency detection"

Pr. 116 "third output frequency detection"

A signal is output when the output frequency reaches or exceeds the setting. This function can be used for electromagnetic brake operation, open signal, etc.

- You can also set the detection of the frequency used exclusively for reverse rotation. This function is effective for switching the timing of electromagnetic brake operation between forward rotation (rise) and reverse rotation (fall) during vertical lift operation, etc.

Parameter Number	Factory Setting	Setting Range	Remarks
42	6Hz	0 to 400Hz	
43	9999	0 to 400Hz, 9999	9999: Same as Pr. 42 setting
50	30Hz	0 to 400Hz	
116	9999	0 to 400Hz, 9999	9999: Function invalid

<Setting>

Refer to the figure below and set the corresponding parameters:

・ When Pr. 43 ≠ 9999, the Pr.42 setting applies to forward rotation and the Pr.43 setting applies to reverse rotation.

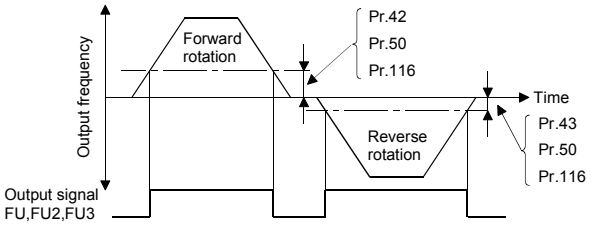

Output Signal

Parameter Number	Output Signal
42	FU1
43	
50	FU2
116	FU3

Use Pr. 190 to Pr. 195 to assign the terminals used to output the FU2 and FU3 signals.

Note: 1. When the inboard option unit is used to exercise PLG feedback control, use the RUN (running) signal. (If the FU1, FU2 or FU3 signal is used, the brake may not be opened.)
2. When terminal assignment is changed using Pr. 190 to 195, the other functions may be affected. Check the functions of the corresponding terminals before making setting.

Pr. 44, Pr. 45 ⇒ Refer to Pr. 7.

Pr. 46 ⇒ Refer to Pr. 0.

Pr. 47 ⇒ Refer to Pr. 3.

Pr. 48 "second stall prevention operation current"

Pr. 49 "second stall prevention operation frequency"

Pr. 114 "third stall prevention operation current"

Pr. 115 "third stall prevention operation frequency"

Related parameters

Pr. 22 "stall prevention operation level"
Pr. 23 "stall prevention operation level at double speed"
Pr. 66 "stall prevention operation level reduction starting frequency"
Pr. 154 "voltage reduction selection during stall prevention operation"
Pr. 180 to Pr. 186 (input terminal function selection)

- The stall prevention operation level can be changed within the range from 0Hz to the frequency set in Pr. 49 or 115.
- The stall prevention operation level can be changed by switching the external input signal on-off.

Parameter Number	Factory Setting	Setting Range
48	150%	0 to 200%
49	0	0 to 400Hz, 9999
114	150%	0 to 200%
115	0	0 to 400Hz

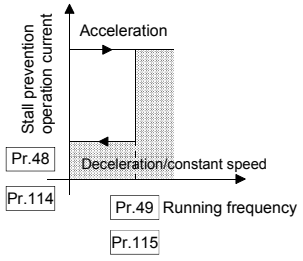

<Setting>

- Set the stall prevention operation level in Pr. 48 and Pr. 114.
- Refer to the following list to set values in Pr. 49 and Pr. 115.
- Pr. 114 and Pr. 115 are made valid by switching on the X9 signal. Set "9" in any of Pr. 180 to Pr. 186 to allocate the terminal used to input the X9 signal.

Pr. 49 Setting	Pr. 115 Setting	Operation
0		Second (third) stall prevention function is not activated.
0.01Hz to 400Hz		Second (third) stall prevention function is activated according to the frequency as shown above.
9999	Cannot be set.	Second stall prevention function is activated according to the RT signal. RT signal ON ····· Stall level Pr. 48 RT signal OFF ···· Stall level Pr. 22

Note:
1. When Pr. 49 = "9999", setting "0" in Pr. 48 disables the stall prevention function when the RT signal switches on. When Pr. 49 ≠ "9999" and Pr. 48 = "0", the stall prevention operation level is 0% when the frequency is equal to or less than the value set in Pr. 49.
2. When the stall prevention operation level signal input function is selected (Pr. 22 = 9999), setting "9999" in Pr. 49 changes the stall prevention operation level from the value of the stall prevention operation level signal (terminal 1 input) to the value set in Pr. 48 when the RT signal switches on.
3. When both the RT and X9 signals are on, the third stall prevention function is selected.
4. When the RT (X9) signal is on, the second (third) functions such as second (third) acceleration/deceleration time are also selected.
5. When terminal assignment is changed using Pr. 180 to 186, the other functions may be affected. Check the functions of the corresponding terminals before making setting.

⚠ CAUTION

⚠ **Do not set a too small value to the second (third) stall prevention operation current. Otherwise, torque generated will decrease.**

Pr. 50 ⇒ Refer to Pr. 42.

Pr. 52 "DU/PU main display screen data selection"

Pr. 53 "PU level display data selection"

Pr. 54 "FM terminal function selection"

Pr. 158 "AM terminal function selection"

Related parameters

Pr. 37 "speed display"
Pr. 55 "frequency monitoring reference"
Pr. 56 "current monitoring reference"
Pr. 170 "watt-hour meter clear"
Pr. 171 "actual operation hour meter clear"
Pr. 900 "FM terminal calibration"
Pr. 901 "AM terminal calibration"

- You can select the signals shown on the operation panel (FR-DU04)/parameter unit (FR-PU04) main display screen and on the parameter unit (FR-PU04) level meter and signals output to the FM and AM terminals.
- There are two different signal outputs: FM pulse train output terminal and AM analog output terminal. Select the signals using Pr. 54 and Pr. 158.

Parameter Number	Factory Setting	Setting Range
52	0	0,5 to 14, 17, 18, 20,23 to 25, 100
53	1	0 to 3, 5 to 14, 17, 18
54	1	1 to 3, 5 to 14, 17, 18, 21
158	1	1 to 3, 5 to 14, 17, 18, 21

<Setting>

Set Pr. 52 to Pr. 54 and Pr. 158 in accordance with the following table:

Signal Type	Display Unit	Parameter Setting					Full-Scale Value of FM, AM, Level Meter
		Pr.52		Pr.53	Pr.54	Pr.158	
		DU LED	PU main monitor	PU level meter	FM terminal	AM terminal	
No display	——	×	×	0	×	×	——
Output frequency	Hz	0/100	0/100	1	1	1	Pr. 55
Output current	A	0/100	0/100	2	2	2	Pr. 56
Output voltage	V	0/100	0/100	3	3	3	800V (1000V:A560L)
Alarm display	——	0/100	0/100	×	×	×	——
Frequency setting	Hz	5	*	5	5	5	Pr. 55
Running speed	r/min	6	*	6	6	6	Pr. 55 value converted into Pr. 37 value
Motor torque	%	7	*	7	7	7	Rated torque of applied motor × 2
Converter output voltage	V	8	*	8	8	8	800V
Regenerative brake duty	%	9	*	9	9	9	Pr. 70
Electronic overcurrent protection load factor	%	10	*	10	10	10	Protection operation level
Output current peak value	A	11	*	11	11	11	Pr. 56
Converter output voltage peak value	V	12	*	12	12	12	800V (1000V:A560L)
Input power	kW	13	*	13	13	13	Rated power of inverter rating × 2***
Output power	kW	14	*	14	14	14	Rated power of inverter rating × 2***
Input terminal status	——	×	*	×	×	×	——
Output terminal status	——	×	*	×	×	×	——
Load meter**	%	17	17	17	17	17	Pr. 56
Motor exciting current	A	18	18	18	18	18	Pr. 56
Position pulse	——	19	19	×	×	×	——
Cumulative operation time	hr	20	20	×	×	×	——
Reference voltage output	——	×	×	×	21	21	1440Hz is output to FM terminal. Full-scale voltage is output to AM terminal.
Orientation status	——	22	22	×	×	×	——
Actual operation time	hr	23	23	×	×	×	——
Motor load factor	%	24	24	×	×	×	Rated inverter current × 2***
Cumulative power	kW	25	25	×	×	×	——

When 100 is set in Pr.52, the monitored values during stop and during operation differ as indicated below:
(The LED on the left of Hz flickers during a stop and is lit during running.)

	Pr. 52		
	0	100	
	During operation/during stop	During stop	During operation
Output frequency	Output frequency	Set frequency	Output frequency
Output current	Output current		
Output voltage	Output voltage		
Alarm display	Alarm display		

Note: 1. During an error, the output frequency at error occurrence is displayed.
2. During MRS, the values are the same as during a stop. During offline auto tuning, the tuning status monitor has priority.

Note: 1. The monitoring of items marked × cannot be selected.
2. By setting "0" in Pr. 52, the monitoring of "output frequency to alarm display" can be selected in sequence by the SHIFT key.(factory setting)
3. ＊"Frequency setting to output terminal status" on the PU main monitor are selected by "other monitor selection" of the parameter unit (FR-PU04).
4. ＊＊The load meter is displayed in %, with the current set in Pr. 56 regarded as 100%.
5. The motor torque display is valid only in the advanced magnetic flux vector control mode.
6. The actual operation time displayed by setting "23" in Pr. 52 is calculated using the inverter operation time. (Inverter stop time is not included.) Set "0" in Pr. 171 to clear it.
7. When Pr. 53 = "0", the level meter display of the parameter unit can be erased.
8. By setting "1, 2, 5, 6, 11, 17 or 18" in Pr. 53, 54 the full-scale value can be set in Pr. 55 or Pr. 56.
9. The cumulative operation time and actual operation time are calculated from 0 to 65535 hours, then cleared, and recalculated from 0.
When the operation panel (FR-DU04) is used, the display shows "----" after 9999 or more hours have elapsed.
Whether 9999 or more hours have elapsed or not can be confirmed on the parameter unit (FR-PU04).
10. When the operation panel (FR-DU04) is used, the display unit is Hz, V or A only.
11. The orientation status functions when the FR-A5AP option is used. If the option is not used, "22" may be set in Pr. 52 and the value displayed remains "0" and the function is invalid.
12. ＊＊＊Rated value is varied in accordance with Pr. 570.

Pr. 55 "frequency monitoring reference"

Pr. 56 "current monitoring reference"

Related parameters

Pr. 37 "speed display"
Pr. 53 "PU level display data selection"
Pr. 54 "FM terminal function selection"
Pr. 158 "AM terminal function selection"
Pr. 900 "FM terminal calibration"
Pr. 901 "AM terminal calibration"

Set the frequency or current which is referenced for display when the frequency or current is selected for the FM and AM terminals and PU level meter display.

Parameter Number	Factory Setting	Setting Range
55	60Hz<50Hz>	0 to 400Hz
56	Rated output current	0 to 500A

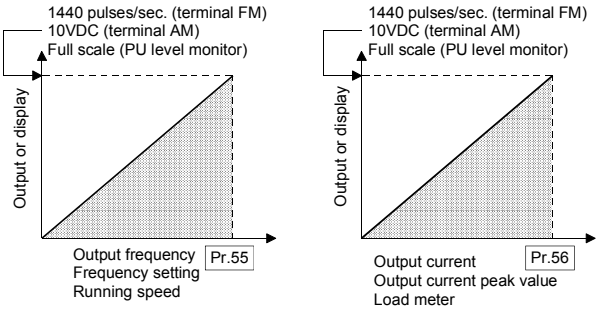

<Setting>

Referring to the above figures and following table, set Pr. 55 and Pr. 56:

Monitoring Reference Setting Parameter	Monitored Data Selection	PU Level Display Selection Pr. 53 Setting	FM Terminal Function Selection Pr. 54 Setting	AM Terminal Function Selection Pr. 158 Setting
Frequency monitoring reference Pr. 55	Output frequency (Hz)	1	1	1
	Frequency setting (Hz)	5	5	5
	Running speed (Pr. 37)	6	6	6
Current monitoring reference Pr. 56	Output current (A)	2	2	2
	Output current peak value (A)	11	11	11
	Load meter (%)	17	17	17
	Motor exciting current (A)	18	18	18
Setting using Pr. 55, Pr. 56		Set to make the PU level meter indication to be in full-scale.	Set to make the terminal FM pulse train output to be 1440 pulses/sec.	Set to make the terminal AM output voltage to be 10V.

Note: 1. The maximum pulse train output of terminal FM is 2400 pulses/sec. If Pr. 55 is not adjusted, the output of terminal FM will be filled to capacity. Therefore, adjust Pr. 55.
2. The maximum output voltage of terminal AM is 10VDC.

Pr. 57 "coasting time for automatic restart after instantaneous power failure/commercial power supply-inverter switch-over"

Pr. 58 "cushion time for automatic restart after instantaneous power failure/commercial power supply-inverter switch-over"

Pr.162 "Automatic restart after instantaneous power failure selection"

Pr.163 "First cushion time for restart"

Pr.164 "First cushion voltage for restart"

Pr.165 "Restart stall prevention operation level"

- You can restart the inverter without stopping the motor (with the motor coasting) when the commercial power supply is switched to the inverter operation or when the power is restored after an instantaneous power failure. (When automatic restart operation is set to be enabled, UVT and IPF among the alarm output signals will not be output at occurrence of an instantaneous power failure.)

Parameter Number	Factory Setting	Setting Range	Remarks
57	9999	0, 0.1 to 30 sec, 9999	9999: No restart
58	1.0 sec	0 to 60 sec	
162	0	0, 1, 2,10	
163	0 sec	0 to 20 sec	
164	0%	0 to 100%	
165	150%	0 to 200%	

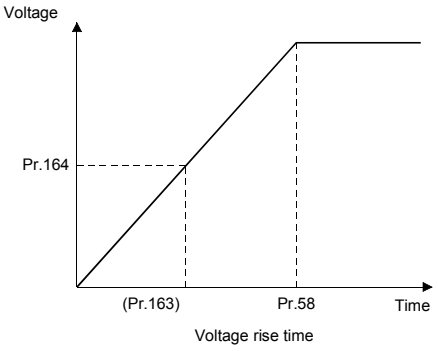

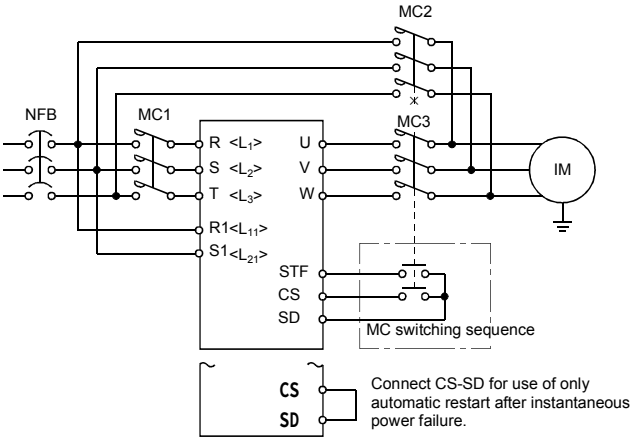

<Setting>

Refer to the above figures and following table, and set the parameters:

Pr.Number	Setting	Description
162	0	Frequency search made Frequency search is made after detection of an instantaneous power failure.
	1	No frequency search Independently of the motor coasting speed, the output voltage is gradually increased with the frequency kept as preset.
	2	Build in PLG option : PLG detection frequency search made restart after instantaneous power failure can be made at the frequency detected from the PLG. No build in PLG option : Frequency search mode
	10	Normally frequency search made. Frequency search is made after detection of an instantaneous power failure and at each restart.
57	0	The coasting time is set to 5 sec. Generally use this setting.
	0.1 to 30 sec	Waiting time for inverter-triggered restart after power is restored from an instantaneous power failure. (Set this time between 0.1 sec and 5 sec according to the inertia moment (GD^2) and torque of the load.)
	9999	No restart
58	0 to 60 sec	Voltage reduction rising time at restart. Set this time to between 0 and 60 sec., according to the load's moment of inertia (GD2) and torque side. If set too short, the stall could activate.
163	0 to 20 sec	Normally the motor may be run with the factory settings. These values are adjustable to the load (inertia moment, torque).
164	0 to 100%	
165	0 to 200%	

Note:
1. When restart operation is selected, UVT and IPF among the alarm output signals are not output at occurrence of an instantaneous power failure.
2. If the inverter capacity is more than one rank higher than the motor capacity, an overcurrent (OCT) alarm may take place, disabling the motor from starting.
3. When Pr. 57 ≠ 9999, the inverter will not run if the CS signal remain off.
   Excluding when Pr. 162 is set to "2".
4. When Pr. 162 = "0" or "2", connection of two or more motors to one inverter will make the inverter function improperly. (The inverter will not start properly.)
5. When Pr. 162 = "0" or "2", the DC dynamic brake is operated instantly on detection of restarting speed. Therefore, if the inertia moment (GD^2) of the load is small, the speed may reduce.
6. When Pr. 163 = "1", the output frequency before an instantaneous power failure is stored and output at the time of restart. If the power of the inverter control circuit is lost, the frequency before an instantaneous power failure cannot be stored and the inverter will start from the starting frequency.
7. The SU and FU signals are not output during restart but are output after the restart cushion time has elapsed.

⚠ CAUTION

Provide mechanical interlocks for MC1 and MC2.
The inverter will be damaged if power is entered into the inverter output section.

When automatic restart after instantaneous power failure has been selected, the motor and machine will start suddenly (after the reset time has elapsed) after occurrence of an instantaneous power failure. Stay away from the motor and machine.
When you have selected automatic restart after instantaneous power failure, apply the supplied CAUTION seals in easily visible places.

Pr. 59 "remote setting function selection"

Related parameters

Pr. 1 "maximum frequency"
Pr. 7 "acceleration time"
Pr. 8 "deceleration time"
Pr. 18 "high-speed maximum frequency"
Pr. 28 "multi-speed input compensation"
Pr. 44 "second acceleration/deceleration time"
Pr. 45 "second deceleration time"

If the operator panel is located away from the control box, you can use contact signals to perform continuous variable-speed operation, without using analog signals.

- By merely setting this parameter, you can use the acceleration, deceleration and setting clear functions of the motorized speed setter (FR-FK).
- When the remote function is used, the output frequency of the inverter can be compensated for as follows:

External operation mode	Frequency set by RH/RM operation plus external running frequency other than multi-speeds (Set "1" in Pr. 28 to select the compensation input (terminal 1).)
PU operation mode	Frequency set by RH/RM operation plus PU running frequency

Parameter Number	Factory Setting	Setting Range
59	0	0, 1, 2

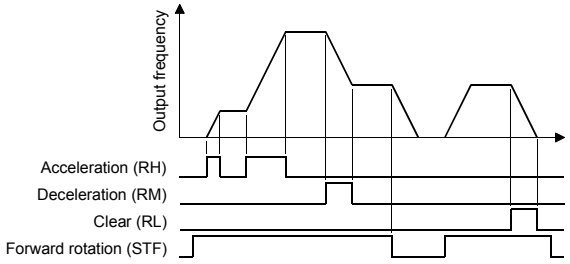

<Setting>

Refer to the following table and set the parameter:

Pr. 59 Setting	Operation	
	Remote setting function	Frequency setting storage function
0	No	——
1	Yes	Yes
2	Yes	No

・ Use Pr. 59 to select whether the remote setting function is used or not and whether the frequency setting storage function in the remote setting mode is used or not. When "remote setting function - yes" is selected, the functions of terminals RH, RM and RL are changed to acceleration (RH), deceleration (RM) and clear (RL).

Note: 1. The frequency can be varied by RH (acceleration) and RM (deceleration) between 0 and the maximum frequency (Pr. 1 or Pr. 18 setting).
2. When the acceleration or deceleration signal switches on, the set frequency varies according to the slope set in Pr. 44 or Pr. 45. The output frequency acceleration/deceleration times are as set in Pr. 7 and Pr. 8, respectively. Therefore, the longer preset times are used to vary the actual output frequency.
3. The frequency setting storage function stores in memory the remotely-set frequency (frequency set by RH/RM operation) when the acceleration and deceleration signals remain off for more than 1 minute or as soon as the start signal (STF or STR) switches off. When power is switched off, then on, operation is resumed with that value.

⚠ CAUTION

⚠ When selecting this function, re-set the maximum frequency according to the machine.

Pr. 60 "intelligent mode selection"

Related parameters

Pr. 0 "torque boost"
Pr. 7 "acceleration time"
Pr. 8 "deceleration time"
Pr. 13 "starting frequency"
Pr. 19 "base frequency voltage"
Pr. 80, Pr. 81
(advanced magnetic flux vector control)
Pr. 278 to Pr. 285
(brake sequence functions)

The inverter automatically sets appropriate parameters for operation.

- If you do not set the acceleration and deceleration times and V/F pattern, you can run the inverter as if appropriate values had been set in the corresponding parameters. This operation mode is useful to start operation immediately without making fine parameter settings.

Parameter Number	Factory Setting	Setting Range
60	0	0 to 8

<Setting>

Pr. 60 Setting	Operation Mode	Description		Automatically Set Parameters
0	Ordinary operation mode	———		———
1, 2	Shortest acceleration/ deceleration mode	Set to accelerate/decelerate the motor in the shortest time. The inverter makes acceleration/deceleration in the shortest time using its full capabilities. During deceleration, an insufficient brake capability may cause the regenerative overvoltage alarm (E.OV3). "1": Stall prevention operation level 150% "2": Stall prevention operation level 180%		Pr. 7, Pr. 8
3	Optimum acceleration/ deceleration mode (Note 2, 4)	Optimum operation can be carried out by fully utilizing the inverter capabilities in the continuous rating range. Self-learning automatically sets the corresponding parameters so that the average current during acceleration/deceleration is equal to the rated current. Appropriate for applications where the load will not vary by a large ammount.		Pr. 0, Pr. 7, Pr. 8
4	Energy-saving mode (Note 3, 5)	Tunes the inverter output voltage online to minimize the inverter output voltage during constant-speed operation. Appropriate for energy-saving applications such as fan and pump.		Output voltage
5, 6	Elevator mode (Note 3)	Automatically controls the inverter output voltage to deliver the maximum torque in both the driving and regenerative modes. Appropriate for a counterbalanced elevator. "5": Stall prevention operation level 150% "6": Stall prevention operation level 180%		Pr. 0, Pr. 13, Pr. 19
7	Brake sequence mode	Mechanical brake opening completion signal input	This function causes the inverter to output the mechanical brake operation timing signal for elevating application. For function details and related parameter setting, refer to Pr. 278 to Pr. 285 (brake sequence functions).	———
8		Mechanical brake opening completion signal not input		

Note:
1. When more accurate control is required for your application, set the other parameters as appropriate.
2. Because of the learning system, this control is not valid at the first time in the optimum acceleration/deceleration mode. Also, this mode is only valid for frequency setting of 30.01Hz or more.
3. When the advanced magnetic flux vector control has been selected using Pr. 80 and Pr. 81, the settings of the energy-saving mode and elevator mode are ignored. (Advanced magnetic flux vector control has higher priority.)
4. If an overvoltage (OV3) trip has occurred during operation in the optimum acceleration/deceleration mode (setting "3"), re-set Pr. 8 "deceleration time" to a larger value and restart operation in this mode.
5. When the "energy-saving mode" (setting "4") is used to decelerate the motor to a stop, the deceleration time may be longer than the preset value. Also, overvoltage is likely to occur in this mode as compared to the constant-torque load characteristics, set the deceleration time to a longer value.
6. The "energy-saving mode" with setting value "4" is valid when the Pr. 18 high-speed upper limit frequency is 180Hz or less.

Pr. 61 "reference current"

Pr. 62 "reference current for acceleration"

Pr. 63 "reference current for deceleration"

Pr. 64 "starting frequency for elevator mode"

Related parameter

Pr. 60 "intelligent mode selection"

- Set these parameters to improve performance in the intelligent mode.

Parameter Number	Factory Setting	Setting Range	Remarks
61	9999	0～3600A, 9999	9999: Referenced from rated inverter current.
62	9999	0～200%, 9999	
63	9999	0～200%, 9999	
64	9999	0～200%, 9999	

<Setting>

(1) Pr. 61 "reference current setting"

Setting	Reference Current
9999 (factory setting)	Referenced from rated inverter current
0 to 3600A	Referenced from setting (rated motor current)

(2) Pr. 62 "reference current for acceleration"

(The reference value differs between the shortest acceleration/deceleration mode and optimum acceleration/deceleration mode.)
The reference current setting can be changed.

Setting	Reference Current	Remarks
9999 (factory setting)	150% (180%) is the limit value.	Shortest acceleration/deceleration mode
	100% is the optimum value.	Optimum acceleration/deceleration mode
0 to 200%	The setting of 0 to 200% is the limit value.	Shortest acceleration/deceleration mode
	The setting of 0 to 200% is the optimum value.	Optimum acceleration/deceleration mode

(3) Pr. 63 "reference current for deceleration"

(The reference value differs between the shortest acceleration/deceleration mode and optimum acceleration/deceleration mode.)
The reference current setting can be changed.

Setting	Reference Current	Remarks
9999 (factory setting)	150% (180%) is the limit value.	Shortest acceleration/deceleration mode
	100% is the optimum value.	Optimum acceleration/deceleration mode
0 to 200%	The setting of 0 to 200% is the limit value.	Shortest acceleration/deceleration mode
	The setting of 0 to 200% is the optimum value.	Optimum acceleration/deceleration mode

(4) Pr. 64 "starting frequency for elevator mode"

Setting	Reference Current
9999 (factory setting)	2Hz is the starting frequency.
0 to 10Hz	The setting of 0 to 10Hz is the starting frequency.

Note: Pr. 61 to Pr. 64 are only valid when any of "1 to 6" is selected for Pr. 60.

Pr. 65 "retry selection"

Pr. 67 "number of retries at alarm occurrence"

Pr. 68 "retry waiting time"

Pr. 69 "retry count display erasure"

When an alarm occurs, the retry function causes the inverter to automatically reset itself to make a restart and continue operation. You can select whether retry is made or not, alarms reset for retry, number of retries made, and waiting time.

Parameter Number	Factory Setting	Setting Range
65	0	0 to 5
67	0	0 to 10, 101 to 110
68	1 sec	0 to 10 sec
69	0	0

<Setting>

Use Pr. 65 to select alarms to be reset for retry.

Errors Reset for Retry	Setting					
Display	0	1	2	3	4	5
E.OC1	●	●		●	●	●
E.OC2	●	●		●	●	
E.OC3	●	●		●	●	●
E.OV1	●		●	●	●	
E.OV2	●		●	●	●	
E.OV3	●		●	●	●	
E.THM	●					
E.THT	●					
E.IPF	●				●	
E.UVT	●				●	
E.FIN						
E. GF	●				●	
E. LF						
E.OHT	●					
E.OLT	●				●	
E.OPT	●				●	
E.OP1	●				●	
E.OP2	●				●	
E.OP3	●				●	
E. PE	●				●	
E.PUE						
E.RET						
E.CPU						
E.MB1	●				●	
E.MB2	●				●	
E.MB3	●				●	
E.MB4	●				●	
E.MB5	●				●	
E.MB6	●				●	
E.MB7	●				●	
E.P24						
E.CTE						
E.15						

Note: ● indicates the errors selected for retry.

・ Use Pr. 67 to set the number of retries at alarm occurrence.

Pr. 67 Setting	Number of Retries	Alarm Signal Output
0	Retry is not made.	———
1 to 10	1 to 10 times	Not output.
101 to 110	1 to 10 times	Output.

・ Use Pr. 68 to set the waiting time from when an inverter alarm occurs until a restart in the range 0 to 10 seconds.

・ Reading the Pr. 69 value provides the cumulative number of successful restart times made by retry. The setting of "0" erases the cumulative number of times.

Note: 1. The cumulative number in Pr. 69 is incremented by "1" when retry operation is regarded as successful, i.e. when normal operation is continued without any alarm occurring during a period four times longer than the time set in Pr. 68.

2. If alarms occur consecutively within a period four times longer than the above waiting time, the operation panel (FR-DU04) may show data different from the most recent data or the parameter unit (FR-PU04) may show data different from the first retry data. The data stored as the error reset for retry is only that of the alarm which occurred the first time.

3. When an inverter alarm is reset at the restart time, the stored data of the electronic overcurrent protection, regenerative brake duty, etc. are not cleared. (Different from the power-on reset.)

⚠ CAUTION

When you have selected the retry function, stay away from the motor and machine unless required. They will start suddenly (after the reset time has elapsed) after occurrence of an alarm.
When you have selected the retry function, apply the supplied CAUTION seals in easily visible places.

Pr. 66 ⇒ Refer to Pr. 22.

Pr. 70 ⇒ Refer to Pr. 30.

Pr. 71 "applied motor"

Related parameters

Pr. 0 "torque boost"
Pr. 12 "DC dynamic brake voltage"
Pr. 19 "base frequency voltage"
Pr. 60 "intelligent mode"
Pr. 80 "motor capacity"
Pr. 81 "number of motor poles"
Pr. 96 "auto tuning setting/status"
Pr. 100 to Pr. 109 "
V/F frequency/voltage"

Set the motor used.

Parameter Number	Factory Setting	Setting Range
71	0	0 to 8, 13 to 18

<Setting>

・ Refer to the following list and set this parameter according to the motor used.

Pr. 71 Setting	Thermal Characteristics of Electronic Overcurrent Protection			Motor	
				Standard	Constant Torque
0	Thermal characteristics matching a general-purpose motor			○	
1	Thermal characteristics matching the Mitsubishi constant-torque motor				○
2	Thermal characteristics matching a general-purpose motor 5-point flexible V/F characteristics			○	
20	Thermal characteristics for advanced magnetic flux vector control of the Mitsubishi general-purpose motor SF-JR4P (1.5KW or less)			○	
3	Standard motor	Select "offline auto tuning setting".		○	
13	Constant-torque motor				○
4	Standard motor	Constant-torque motor		○	
14	Auto tuning data can be read or set anew.				○
5	Standard motor	Star connection	Motor constants can be entered directly.	○	
15	Constant-torque motor				○
6	Standard motor	Delta connection		○	
16	Constant-torque motor				○
7	Standard motor	Star connection	Direct motor constant entry + offline auto tuning	○	
17	Constant-torque motor				○
8	Standard motor	Delta connection		○	
18	Constant-torque motor				○

Note: 1. When "9999" is set in Pr. 19, "2" cannot be set in Pr. 71. To set "2" in Pr. 71, set the appropriate value (other than "9999") in Pr. 19.
2. When "2" is set in Pr. 71, Pr. 100 to Pr. 109 are displayed on the parameter unit (FR-PU04). In other settings, if any of Pr. 100 to Pr. 109 settings is changed, the new setting is not displayed in the "INITIAL VALUE LIST" and "CHANGE LIST".
3. Refer to Pr. 96 for offline auto tuning.
4. Set any of "3, 7, 8, 13, 17 and 18" to perform offline auto tuning.

⚠ CAUTION

⚠ **Set this parameter correctly according to the motor used.**
Incorrect setting may cause the motor to overheat and burn.

Pr. 72 "PWM frequency selection"

Pr. 240 "Soft-PWM setting"

You can change the motor tone.

- By parameter setting, you can select Soft-PWM control which changes the motor tone.
- Soft-PWM control changes motor noise from a metallic tone into an unoffending complex tone.

Parameter Number	Factory Setting	Setting Range	Remarks
72	1	0, 1, 2	0: 0.7kHz, 1: 1kHz, 2: 2.5kHz
240	1	0, 1	1: Soft-PWM valid

<Setting>

・ Refer to the following list and set the parameters:

Parameter Number	Factory Setting	Description
72	0, 1, 2	PWM carrier frequency can be changed. (Setting 2 for A540L)
240	0	Soft-PWM invalid
	1	Soft-PWM valid

Note:
1. A reduced PWM carrier frequency will decrease inverter-generated noise and leakage current but increase motor noise.
2. When using the optional sine wave filter, always set Pr. 72 to 2. (for A540L)
3. When Pr. 72 is set to "2", make sure that the motor's rated current x (1.05 to 1.1) is within 90% of the inverter's rated current even if the optional sine wave filter is not used. (for A540L)
4. When Pr. 72 is set to "2", the Soft PWM will be invalid regardless of the Pr. 240 setting. (for A540L)

Pr. 73 "0-5V/0-10V selection"

Related parameters

Pr. 22 "stall prevention operation level"
Pr. 903 "frequency setting voltage bias"
Pr. 905 "frequency setting current gain"

You can select the analog input terminal specifications, the override function and the function to switch between forward and reverse rotation depending on the input signal polarity.

Parameter Number	Factory Setting	Setting Range
73	1	0 to 5, 10 to 15

<Setting>

Pr. 73 Setting	Terminal AU Signal	Terminal 2 Input Voltage	Terminal 1 Input Voltage	Terminal 4 Input, 4 to 20mA	Override Function	Polarity Reversible
0	OFF (No)	☆0 to 10V	0 to ±10V	Invalid	×	No (Note 3)
1		☆0 to 5V	0 to ±10V			
2		☆0 to 10V	0 to ±5V			
3		☆0 to 5V	0 to ±5V			
4		0 to 10V	☆0 to ±10V		○	
5		0 to 5V	☆0 to ±5V			
10		☆0 to 10V	0 to ±10V		×	Valid
11		☆0 to 5V	0 to ±10V			
12		☆0 to 10V	0 to ±5V			
13		☆0 to 5V	0 to ±5V			
14		0 to 10V	☆0 to ±10V		○	
15		0 to 5V	☆0 to ±5V			
0	ON (Yes)	Invalid	0 to ±10V	Yes ☆	×	No (Note 3)
1			0 to ±10V			
2			0 to ±5V			
3			0 to ±5V			
4		0 to 10V	Invalid		○	
5		0 to 5V				
10		Invalid	0 to ±10V		×	Valid
11			0 to ±10V			
12			0 to ±5V			
13			0 to ±5V			
14		0 to 10V	Invalid		○	
15		0 to 5V				

Note:
1. The value of terminal 1 (frequency setting auxiliary input) is added to the main speed setting signal of terminal 2 or 4.
2. When override has been selected, terminal 1 or 4 is for the main speed setting and terminal 2 is for the override signal (50 to 150% at 0-5V or 0-10V).
3. Indicates that a negative-polarity frequency command signal is not accepted.
4. To change the maximum output frequency at the input of the maximum frequency command voltage (current), use the frequency setting voltage (current) gain, Pr. 903 (Pr. 905). At this time, the command voltage (current) need not be input. Also, the acceleration/deceleration time, which is a slope up/down to the acceleration/deceleration reference frequency, is not affected by the change in Pr. 73 setting.
5. When the Pr. 22 setting is "9999", the value of terminal 1 is for the stall prevention operation level setting.
6. ☆ indicates the main speed setting.

Pr. 74 "filter time constant"

You can set the input section's internal filter constant of an external voltage or current frequency setting signal.

- Effective for eliminating noise in the frequency setting circuit.
- Increase the filter time constant if steady operation cannot be performed due to noise. A larger setting results in lower response. (The time constant can be set between approx. 1ms and approx. 1 sec. with the setting of 0 to 8. A larger setting results in a larger filter time constant.)

Parameter Number	Factory Setting	Setting Range
74	1	0 to 8

Pr. 75 "reset selection/PU disconnection detection/PU stop selection"

You can select the reset input acceptance, PU (FR-DU04/FR-PU04) connector disconnection detection function and PU stop function.

- Reset selection : You can select the reset function input timing.
- PU disconnection detection : When it is detected that the PU (FR-DU04/FR-PU04) connector is disconnected from the inverter for more than 1 second, the inverter outputs an alarm code (E.PUE) and comes to an alarm stop.
- PU stop selection : When an alarm occurs in any operation mode, you can stop the motor from the PU by pressing the [STOP] key.

Parameter Number	Factory Setting	Setting Range
75	14	0 to 3, 14 to 17

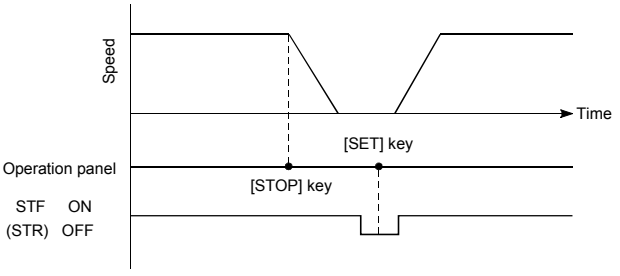

Stop example for external operation

<Setting>

Pr. 75 Setting	Reset Selection	PU Disconnection Detection	PU Stop Selection
0	Reset input normally enabled.	If the PU is disconnected, operation will be continued.	Pressing the [STOP] key decelerates the motor to a stop only in the PU operation mode.
1	Reset input enabled only when the protective function is activated.		
2	Reset input normally enabled.	When the PU is disconnected, the inverter output is shut off.	
3	Reset input enabled only when the protective function is activated.		
14	Reset input normally enabled.	If the PU is disconnected, operation will be continued.	Pressing the [STOP] key decelerates the motor to a stop in any of the PU, external and communication operation modes.
15	Reset input enabled only when the protective function is activated.		
16	Reset input normally enabled.	When the PU is disconnected, the inverter output is shut off.	
17	Reset input enabled only when the protective function is activated.		

How to make a restart after a stop made by the [STOP] key from the PU during external operation

(1) Operation panel (FR-DU04)

1) After completion of deceleration to a stop, switch off the STF or STR signal.
2) Call the operation mode select screen and press the [SET] key.
3) Switch on the STF or STR signal.

(2) Parameter unit (FR-PU04)

1) After completion of deceleration to a stop, switch off the STF or STR signal.
2) Press the [EXT] key.
3) Switch on the STF or STR signal.

Note:
1. By entering the reset signal (RES) during operation, the inverter shuts off output while it is reset, the data of the electronic overcurrent protection and regenerative brake duty are reset, and the motor coasts.
2. The PU disconnection detection function judges that the PU connector is disconnected when it is removed from the inverter for more than 1 second. If the PU had been disconnected before power-on, it is not judged as an alarm.
3. To resume operation, reset the inverter after confirming that the PU is connected securely.
4. When PU disconnection detection is set and the PU is then disconnected during PU jog operation, the motor decelerates to a stop. The motor will not stop if a PU disconnection alarm occurs.
5. The Pr. 75 value can be set any time. Also, if parameter (all) clear is executed, this setting will not return to the initial value.
6. When the motor is stopped by the PU stop function, PS is displayed but an alarm is not output. When the PU connector is used for RS-485 communication operation, the reset selection and PU stop selection functions are valid but the PU disconnection detection function is invalid.
7. The reset key of the PU is only valid when the protective function is activated, independent of the Pr. 75 setting.

⚠ CAUTION

Do not reset the inverter with the start signal on.
Otherwise, the motor will start instantly after resetting, which may lead to hazardous conditions.

Pr. 76 "alarm code output selection"

Related parameters

Pr. 79 "operation mode selection"
Pr. 190 to Pr. 195
(multi-function outputs)
Pr. 200 to Pr. 231

When an alarm occurs, its code can be output as a 4-bit digital signal from the open collector output terminals. When programmed operation has been selected, this parameter also serves to output a group operation signal. The alarm code can read by a programmable controller etc to show its remedy on a display. Also you can look at the progress of programmed operation.

Parameter Number	Factory Setting	Setting Range
76	0	0 to 3

<Setting>

・ Alarm code output

Pr. 76 Setting	Output Terminals			
	SU	IPF	OL	FU
0	Alarm code is not output. (Depends on Pr. 190 to Pr. 195).			
1	Alarm code bit 3	Alarm code bit 2	Alarm code bit 1	Alarm code bit 0
2	When an alarm occurs, an alarm code signal is output. (Output signal is the same as in 1.) When operation is normal, an operation status signal is output. (Output signal is the same as in 0.)			
3 (during programmed operation)	Output at time-out	During group 3 operation	During group 2 operation	During group 1 operation

Note: 1. For alarm code definitions, refer to page 160.
2. The Pr. 76 setting overrides the Pr. 190 to Pr. 195 settings. Therefore, if you assign other signals to output terminals SU, IPF, OL and FU using Pr. 190 to Pr. 195, these terminals provide the output signals as listed above when any of "1 to 3" is set in Pr. 76. This should be noted when using the functions which use the output signals to exercise control.

Example: When using the brake sequence functions (Pr. 278 to Pr. 285), assign the brake opening request signal (BOF) to the RUN terminal by setting "20" in Pr. 190.

Pr. 77 "parameter write disable selection"

You can select between write-enable and disable for parameters. This function is used to prevent parameter values from being rewritten by accident.

Parameter Number	Factory Setting	Setting Range
77	0	0, 1, 2

<Setting>

Pr. 77 Setting	Function
0	Write enabled during a stop only. Parameter values may only be written during a stop in the PU operation mode.
1	Write disabled. Values of Pr.75, Pr. 77 and Pr. 79 "operation mode selection" may be written.
2	Write enabled even during operation.

Note: 1. The values of the parameters half-tone screened in the parameter list can be set at any time. (Pr. 72 and Pr. 240 values cannot be set during external operation.)

2. If Pr. 77 = "2", the values of the following parameters cannot be written during operation. Stop operation when changing their parameter settings.

Parameter Number	Name	Parameter Number	Name
23	Stall prevention operation level at double speed	100	V/F1 (first frequency)
48	Second stall prevention operation current	101	V/F1 (first frequency voltage)
49	Second stall prevention operation frequency	102	V/F2 (second frequency)
60	Intelligent mode selection	103	V/F2 (second frequency voltage)
61	Reference current	104	V/F3 (third frequency)
66	Stall prevention operation reduction starting frequency	105	V/F3 (third frequency voltage)
71	Applied motor	106	V/F4 (fourth frequency)
79	Operation mode selection	107	V/F4 (fourth frequency voltage)
80	Motor capacity	108	V/F5 (fifth frequency)
81	Number of motor poles	109	V/F5 (fifth frequency voltage)
83	Rated motor voltage	135	Commercial power supply-inverter switch-over sequence output terminal selection
84	Rated motor frequency	136	MC switch-over interlock time
95	Advanced mode selection	137	Start waiting time
96	Auto tuning setting/status	138	Commercial power supply-inverter switch-over selection at alarm occurrence
		139	Automatic inverter-commercial power supply switch-over frequency

3. By setting "1" in Pr. 77, the following clear operations can be inhibited:
   - Parameter clear
   - All clear
   - User clear

Pr. 78 "reverse rotation prevention selection"

This function can prevent any reverse rotation fault resulting from the misoperation of the start signal.

- Used for a machine which runs only in one direction, e.g. fan, pump.
  (The setting of this function is valid for the PU, external and communication operations.)

Parameter Number	Factory Setting	Setting Range
78	0	0, 1, 2

<Setting>

Pr. 78 Setting	Function
0	Both forward and reverse rotations allowed
1	Reverse rotation disallowed
2	Forward rotation disallowed

Pr. 79 "operation mode selection"

Related parameters

Pr. 15 "jog frequency"
Pr. 4 to 6, Pr. 24 to 27, Pr.232 to Pr.239 "multi-speed operation"
Pr. 76 "alarm code output selection"
Pr. 180 to Pr. 186 (input terminal function selection)
Pr. 200 to Pr. 231 "programmed operation"

Used to select the operation mode of the inverter.
You can choose any of the operation modes: operation using external signals (external operation), operation from the PU (FR-DU04/FR-PU04) (PU operation), combination of PU operation and external operation (external/PU combined operation), and computer link operation (when the FR-A5NR option is used).

Parameter Number	Factory Setting	Setting Range
79	0	0 to 8

<Setting>

Pr. 79 Setting	Function
0	PU or external operation can be selected.
1	PU operation mode
2	External operation mode
3	External/PU combined operation mode Running frequency ····· Set from the PU (FR-DU04/FR-PU04) (direct setting, [UP/DOWN] key) or external signal input (multi-speed setting only) Start signal ····· External signal input (terminal STF, STR)
4	External/PU combined operation mode Running frequency ····· External signal input (terminal 2, 4, 1, jog, multi-speed selection) Start signal ····· Input from the PU (FR-DU04/FR-PU04) ([FWD] key, [REV] key)
5	Programmed operation mode You can set 10 different operation starting times, rotation directions and running frequencies for each of three groups. Operation start. ····· STF, timer reset. ····· STR Group selection ····· RH, RM, RL
6	Switch-over mode Switch-over between PU operation, external operation and computer link operation (when the communication option such as the FR-A5NR is used) modes can be done while running.
7	External operation mode (PU operation interlock) X12 signal ON ····· May be switched to PU operation mode (output stop during external operation) X12 signal OFF ····· Switching to PU operation mode inhibited
8	Switching to other than external operation mode (disallowed during operation) X16 signal ON ····· Switched to external operation mode X16 signal OFF ····· Switched to PU operation mode

Note: 1. Either "3" or "4" may be set to select the PU/external combined operation. These settings differ in starting method.

(1) Programmed operation

With this function, you can set 10 different operation starting times, rotation directions and running frequencies individually for each of selected three groups to perform automatic operation under the control of the internal elapsed time counting timer. For full information of this function, refer to the explanations of Pr. 200 to Pr. 231.

(2) Switch-over mode

You can select between PU operation, external operation and computer link operation (when FR-A5NR option is used).

Operation Mode Switching	Switching Operation/Operating Status
External operation to PU operation	1) Select the PU operation mode. • Rotation direction is the same as that of external operation. • Set frequency is as set by the potentiometer (frequency setting potentiometer). (Note that the setting will disappear when power is switched off or the inverter is reset.)
External operation to computer link operation	1) Mode change command to computer link mode is transmitted from the computer. • Rotation direction is the same as that of external operation. • Set frequency is as set by the potentiometer (frequency setting potentiometer). (Note that the setting will disappear when power is switched off or the inverter is reset.)
PU operation to external operation	1) Press the external operation key of the parameter unit. • Rotation direction is determined by the external operation input signal. • Set frequency is determined by the external frequency setting signal.
PU operation to computer link operation	1) Mode change command to computer link mode is transmitted from the computer. • Rotation direction and set frequency are the same as those of PU operation.
Computer link operation to external operation	1) The switch-over command to the external mode is sent from the computer. • Rotation direction is determined by the external operation input signal. • Set frequency is determined by the external frequency setting signal.
Computer link operation to PU operation	1) Select the PU operation mode with the operation panel or parameter unit. • Rotation direction and set frequency are the same as those of computer link operation.

(3) PU operation interlock

When the PU operation interlock signal is switched off, the operation mode is forcibly changed to the external operation mode. This function prevents the inverter from being inoperative by the external command if the mode is accidentally left unswitched from the PU operation mode.

1) Preparation

- Set "7" in Pr. 79 (PU operation interlock).
- Using any of Pr. 180 to Pr. 186 (multi-function input terminal assignment), allocate the terminal used to input X12 (PU external interlock signal).
- When the X12 signal is not assigned, the function of the MRS signal changes from MRS (output stop) to PU external interlock.

2) Function

X12 (MRS) Signal	Function/Operation
ON	Output stopped during external operation. Operation mode can be switched to PU operation mode. Parameter values can be rewritten in PU operation mode. PU operation allowed.
OFF	Forcibly switched to external operation mode. External operation allowed. Switching to PU operation mode inhibited.

<Function/operation changed by switching on-off the X12 (MRS) signal>

Operating Condition		X12 (MRS) Signal	Operation Mode (Note 4)	Operating Status	Parameter Write	Switching to PU Operation Mode
Operation mode	Status					
PU	During stop	ON → OFF (Note 3)	External	During stop	Allowed → disallowed	Disallowed
	During operation	ON → OFF (Note 3)		If external operation frequency setting and start signal are entered, operation is performed in that status.	Allowed → disallowed	Disallowed
External	During stop	OFF → ON	External	During stop	Disallowed → disallowed	Allowed
		ON → OFF			Disallowed → disallowed	Disallowed
	During operation	OFF → ON		Disallowed → disallowed	Disallowed → disallowed	Disallowed
		ON → OFF		During operation → output stop	Disallowed → disallowed	Disallowed

Note: 1. When the Pr. 79 setting is 7 and the PU operation interlock signal is OFF, network operation such as computer link cannot be used.
2. If the X12 (MRS) signal is on, the operation mode cannot be switched to the PU operation mode when the start signal (STF, STR) is on.
3. The operation mode switches to the external operation mode independently of whether the start signal (STF, STR) is on or off. Therefore, the motor is run in the external operation mode when the X12 (MRS) signal is switched off with either of STF and STR on.
4. When an alarm occurs, the inverter can be reset by pressing the [RESET] key of the operation panel.
5. When the MRS signal is used as the PU interlock signal, switching the MRS signal on and rewriting the Pr. 79 value to other than 7 in the PU operation mode causes the MRS signal to provide the ordinary MRS function (output stop). Also, as soon as 7 is set in Pr. 79, the MRS signal acts as a PU interlock signal.
6. When the MRS signal is used as the PU external interlock signal, the signal logic conforms to the PR. 17 setting. When Pr. 17 = 2, read ON for OFF and OFF for ON in the above explanation.

(4) Operation mode external signal switching function

1) Preparation

Set "8" (switching to other than external operation mode) in Pr. 79. Using any of Pr. 180 to Pr. 186 (input terminal function selection), allocate the terminal used to input the X16 (PU-external operation switching) signal.

2) Function

When the X16 signal is switched on in the PU operation mode, the operation mode is forcibly changed to the external operation mode. When the X16 signal is switched off in the external operation mode, the operation mode is changed to the PU operation mode. When the X16 signal is switched off during network operation such as computer link, the operation mode is changed to the PU operation mode as soon as the switch-over command to the external operation mode is sent from the computer. Note that this switch-over may only be made while the inverter is at a stop and cannot be made during operation.

X16 Signal	Operation Mode
ON	External operation mode (cannot be changed to the PU operation mode)
OFF	PU operation mode (cannot be changed to the external operation mode)

Note: When terminal assignment is changed using Pr. 180 to 186, the other functions may be affected. Check the functions of the corresponding terminals before making setting.

Pr. 80 "motor capacity"

Pr. 81 "number of motor poles"

Pr. 89 "speed control gain"

Related parameters

Pr. 71 "applied motor"
Pr. 83 "rated motor voltage"
Pr. 84 "rated motor frequency"
Pr. 89 "speed control gain"
Pr. 90 to Pr. 94 (motor constants)
Pr. 95 "online auto tuning selection"
Pr. 96 "auto tuning setting/status"
Pr. 180 to 186
(input terminal function selection)

You can set the advanced magnetic flux vector control.

- Advanced magnetic flux vector control
  Provides large starting torque and sufficient low-speed torque.
  Effective for great load fluctuation.

Parameter Number	Factory Setting	Setting Range	Remarks
80	9999	0 to 3600kW, 9999	9999: V/F control
81	9999	2, 4, 6, 12, 14, 16, 9999	9999: V/F control
89	100%	0 to 200.0%	

If any of the following conditions is not satisfied, faults such as torque shortage and speed fluctuation may occur. In this case, select V/F control.

<Operating conditions>

- The motor capacity is equal to or one rank lower than the inverter capacity (CT rated).
- The motor type is the Mitsubishi standard motor or Mitsubishi constant-torque motor. When any other motor is used, offline auto tuning must be performed.
- The number of motor poles is any of 2, 4, and 6.
- Single-motor operation (one motor for one inverter) is performed.
- The wiring length between the inverter and motor is within 30m. (If the length is over 30m, perform offline auto tuning with the cables wired.)
- Do not use the optional sine wave filter between the inverter and motor.
- The upper limit frequency must be 180Hz or less.

<Setting>

(1) Advanced magnetic flux vector control

- By setting the capacity, number of poles and type of the motor used in Pr. 80 and Pr. 81, the advanced magnetic flux vector control can be selected.

Parameter Number	Setting	Description	
80	9999	V/F control	
	0 to 3600	Set the motor capacity applied.	Advanced magnetic flux vector control
81	9999	V/F control	
	2, 4, 6	Set the number of motor poles.	Advanced magnetic flux vector control
	12,14,16	V/F control is selected when the X18 (magnetic flux-V/F switch-over) signal switches on. (This selection is not made during operation.) Use any of Pr. 180 to Pr. 186 to assign the terminal used for X18 signal input. 12: For 2-pole motor 14: For 4-pole motor 16: For 6-pole motor	

- When using Mitsubishi's constant-torque motor (SF-LHCA), set "1" in Pr. 71.

Note: 1. Speed fluctuation is slightly greater than in the V/F control. (Advanced magnetic flux vector control is not suitable for machines which attaches importance to little speed fluctuation at low speed, e.g. grinders, lapping machines.)
2. When the terminal functions are changed using Pr. 180 to 186, the other functions may be affected. Confirm the functions of the corresponding terminals before making setting.

・For adjustment of motor speed fluctuation due to load variation
Pr. 89 can be used to adjust motor speed fluctuation when the load varies. (When you have changed the conventional model MT-A100E series for the FR-A500L series, advanced magnetic flux vector control is effective when motor speed does not match.)

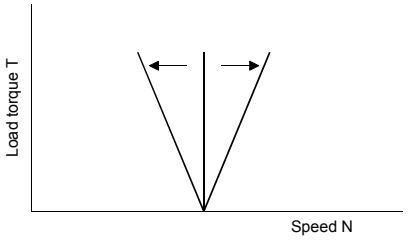

Pr. 82 "motor exciting current"

Pr. 83 "rated motor voltage"

Pr. 84 "rated motor frequency"

Pr. 90 "motor constant (R1)"

Pr. 91 "motor constant (R2)"

Pr. 92 "motor constant (L1)"

Pr. 93 "motor constant (L2)"

Pr. 94 "motor constant (X)"

Pr. 96 "auto tuning setting/status"

Related parameters
Pr. 7 "acceleration time"
Pr. 9 "electronic overcurrent protection"
Pr. 71 "applied motor"
Pr. 80 "motor capacity"
Pr. 81 "number of motor poles"
Pr. 95 "online auto tuning selection"
Pr. 156 "stall prevention operation selection"

When you use the advanced magnetic flux vector control, you can perform the offline auto tuning operation to calculate motor constants automatically.

- Offline auto tuning is made valid only when other values than "9999" are set in Pr. 80 and Pr. 81 to select the advanced magnetic flux vector control.
- Tuning data (motor constants) can be copied to another inverter with the PU (FR-DU04/FR-PU04).
- If the motor used is not Mitsubishi's standard motor or Mitsubishi's constant-torque motor (e.g. motor of another company make) or the wiring distance is long, the motor can be run with the optimum operating characteristics by using the offline auto tuning function.
- Offline auto tuning
  Automatically measures the motor constants used for advanced magnetic flux vector control.
  ・Offline auto tuning can be performed with the load connected. (As the load is smaller, tuning accuracy is higher. Tuning accuracy does not change if inertia is large.)
  ・For the offline auto tuning, you can select either the motor non-rotation mode or rotation mode.
  Note that when making selection for the online auto tuning, the motor-only rotation mode should be selected.
  ・You can read, write and copy the motor constants tuned by the offline auto tuning.
  ・The offline auto tuning status can be monitored with the PU (FR-DU04/FR-PU04).

Parameter Number	Factory Setting	Setting Range	Remarks
82	9999	0 to , 9999	9999: Mitsubishi standard motor
83	200V/400V/575V	0 to 1000V	Rated motor voltage
84	60Hz<50Hz>	50 to 120Hz	
90	9999	0 to , 9999	9999: Mitsubishi standard motor
91	9999	0 to , 9999	9999: Mitsubishi standard motor
92	9999	0 to , 9999	9999: Mitsubishi standard motor
93	9999	0 to , 9999	9999: Mitsubishi standard motor
94	9999	0 to , 9999	9999: Mitsubishi standard motor
96	0	0, 1, 101	0: No tuning

<Operating conditions>

- The motor is connected.
- The motor capacity is equal to or one rank lower than the inverter capacity.
- The maximum frequency is 120Hz.
- Special motors such as high-slip motor and high-speed motor cannot be tuned.
- When "101" (offline auto tuning with motor running) is set in Pr. 96, note the following:
  1) Torque may not be enough during tuning.
  2) The motor may be run at nearly its rated frequency (Pr. 84 setting) without problem.
  3) The brake is open.
  4) No external force is applied to rotate the motor.
- If “1” (tuning without motor running) is set in Pr. 96, the motor may run slightly. Therefore, fix the motor securely with a mechanical brake, or before tuning, make sure that there will be no problem in safety if the motor runs.
- Do not use the reactor or sine wave filter between the inverter and motor.

∗This instruction must be followed especially for vertical lift applications.
Note that if the motor runs slightly, tuning performance is unaffected.

<Setting>

(1) Parameter setting

- Using Pr. 80 and Pr. 81, select the advanced magnetic flux vector control.
- Refer to the parameter details list and set the following parameters:
  1) Set "1 or 101" in Pr. 96.
     - For setting of "1" ····· Tuning without motor running.
     - For setting of “101” ····· Tuning with motor running.
  2) Set the rated motor current (A) in Pr. 9.
  3) Set the rated motor voltage (V) in Pr. 83.
  4) Set the rated motor frequency (Hz) in Pr. 84.
  5) Select the motor using Pr. 71.
     - Standard motor ····· Pr. 71 = "3"
     - Constant-torque motor ····· Pr. 71 = "13"

Note: Pr. 83 and Pr. 84 are only displayed when the advanced magnetic flux vector control is selected (Pr. 80, Pr. 81).
In these parameters, set the values given on the motor plate. When the standard motor has more than one rated value, 400V/60Hz.

■ Parameter details

Parameter Number	Setting	Description		
9	0 to 3600A	Set the rated motor current (A).		
71 (Note 1)	0	Electronic overcurrent protection thermal characteristics suitable for standard motor		
	1	Electronic overcurrent protection thermal characteristics suitable for Mitsubishi's constant-torque motor		
	2	Electronic overcurrent protection thermal characteristics suitable for standard motor 5-point flexible V/F characteristics		
	3	Standard motor	Select "offline auto tuning setting"	
	13	Constant-torque motor		
	4	Standard motor	Auto tuning read or change setting enabled	
	14	Constant-torque motor		
	5	Standard motor	Star connection	Direct input of motor constants enabled
	15	Constant-torque motor		
	6	Standard motor	Delta connection	
	16	Constant-torque motor		
	7	Standard motor	Star connection	Direct input of motor constants + offline auto tuning
	17	Constant-torque motor		
	8	Standard motor	Delta connection	
	18	Constant-torque motor		
83	0 to 1000V	Set the rated motor voltage (V).		
84	50 to 120Hz	Set the rated motor frequency (Hz).		
90	0 to , 9999	Tuning data (Values measured by offline auto tuning are set automatically.)		
91	0 to , 9999			
92	0 to , 9999			
93	0 to , 9999			
94	9999			
	0 to 100%			
96 (Note 2)	0	Offline auto tuning is not performed.		
	1	Offline auto tuning is performed without motor running.		
	101	Offline auto tuning is performed with motor running.		

Note: 1. The electronic overcurrent protection characteristics are also selected simultaneously.
2. Select "101" to increase tuning accuracy.

(2) Tuning execution

・ For PU operation, press the [FWD] or [REV] key.
・ For external operation, switch on the run command.

Note: 1. When "101" is set in Pr. 96, guard against hazards because the motor rotates.
2. To force tuning to end
・ Switch on the MRS or RES signal or press the [STOP] key to end.
・ Switch off the tuning start command or make a forced stop.
3. During offline auto tuning, the following I/O signals are only valid:
・ Input signals
STOP, OH, MRS, RT, CS, RES, STF, STR
・ Output signals
RUN, OL, IPF, FM, AM, A, B, C
4. Special caution should be exercised when a sequence has been designed to open the mechanical brake with the RUN signal.

(3) Monitoring the offline tuning status

When the parameter unit (FR-PU04) is used, the Pr. 96 value is displayed during tuning on the main monitor as shown below. When the operation panel (FR-DU04) is used, only the same numerical value as on the PU is displayed:

・ Parameter unit (FR-PU04) main monitor

(For inverter trip)

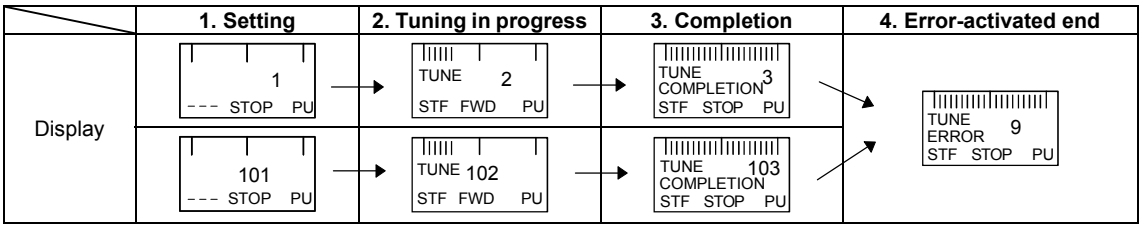

・ Operation panel (FR-DU04) display

(For inverter trip)

	1. Setting	2. Tuning in progress	3. Completion	4. Error-activated end
Displayed value	1 →	2 →	3	9
	101 →	102 →	103	

・ Reference: Offline auto tuning time (factory setting)

Offline Auto Tuning Setting	Time
1: No-rotation mode	Approximately 25 sec
2: Rotation mode	Approximately 60 sec (Offline auto tuning time varies with acceleration and deceleration time settings as indicated below: Offline auto tuning time = acceleration time + deceleration time + approx. 30 sec)

(4) Ending the offline auto tuning

1) Confirm the Pr. 96 value.
   ・ Normal end: "3" or "103" is displayed.
   ・ Error-activated end: "9", "91", "92" or "93" is displayed.
2) When tuning ended normally
   For PU operation, press the [STOP] key. For external operation, switch off the start signal (STF or STR). This operation resets the offline auto tuning and the PU's monitor display returns to the ordinary indication. (Without this operation, next operation cannot be done.)
3) When tuning was ended due to an error
   Offline auto tuning did not end normally. (Motor constants have not been set.) Reset the inverter and start tuning all over again.
4) Error display definitions

Error Display	Error Cause	Remedy
9	Inverter trip	Re-set.
91	Current limit (stall prevention) function was activated.	Increase acceleration/deceleration time. Set "1" in Pr. 156.
92	Inverter output voltage reached 75% of rated value.	Check for fluctuation of power supply voltage.
93	Calculation error	Check the motor wiring and re-set.

No connection with motor will result in 93 error.

Note: 1. The motor constants measured once in the offline auto tuning are stored as parameters and their data is held until the offline auto tuning is performed again.
2. An instantaneous power failure occurring during tuning will result in a tuning error. After power is restored, the inverter goes into the ordinary operation mode. Therefore, when STF (STR) is on, the motor runs in forward (reverse) rotation.
3. When "8888" is set in Pr. 11, the tuning is forced to end and the DC dynamic brake is started upon input of the MRS signal.
4. Any alarm occurring during tuning is handled as in the ordinary mode.
Note that if an error retry has been set, retry is ignored.
5. The set frequency monitor displayed during the offline auto tuning is 0Hz.

⚠ CAUTION

Note that the motor may start running suddenly.

When the offline auto tuning is used in vertical lift application, e.g. a lifter, it may drop due to insufficient torque.

<Setting the motor constants as desired>

The motor constants (Pr. 90 to Pr. 94) may be set as desired in either of two ways; the data measured in the offline auto tuning is read and utilized or changed, or the motor constants are set without the offline auto tuning data being used.

■ To utilize or change the offline auto tuning data
<Operating procedure>

1. Set "801" in Pr. 77. Only when the Pr. 80 and Pr. 81 settings are other than "9999", the parameter values of the motor constants (Pr. 90 to Pr. 94) can be displayed. Though the parameter values of other than the motor constants (Pr. 90 to Pr. 94) can also be displayed, they are parameters for manufacturer setting and should be handled carefully without misuse.
2. Set any of the following values in Pr. 71:
   - Standard motor ····· Pr. 71 = "4"
   - Constant-torque motor ····· Pr. 71 = "14"
3. In the parameter setting mode, read the following parameters and set desired values. (Note 1)

Parameter Number	Name	Setting Range	Setting Increments	Factory Setting
82	Motor exciting current	0 to ****, 9999	1	9999
90	Motor constant R1	0 to ****, 9999	1	9999
91	Motor constant R2	0 to ****, 9999	1	9999
92	Motor constant L1	0 to ****, 9999	1	9999
93	Motor constant L2	0 to ****, 9999	1	9999
94	Motor constant X	0 to ****, 9999	1	9999

4. Return the Pr. 77 setting to the original value (0, 1, 2).

Note: 1. Pr.90 to Pr. 94 values may only be read when the Pr. 80 and Pr. 81 settings are other than "9999" (advanced magnetic flux vector control selected).
2. Set "9999" in Pr. 90 to Pr. 94 to use the standard motor constants (including those for the constant-torque motor).
3. Set "3" (standard motor)or "13" (constant-torque motor) in Pr. 71 to use the constants measured in the offline auto tuning. Set "4 or 14" in Pr. 71 and change the motor constants to change the values measured in the offline auto tuning.
4. As the motor constants measured in the offline auto tuning have been converted into internal data (****), refer to the following setting example when making setting:
Setting example: To slightly increase Pr. 90 value
When Pr. 90 is displayed "2516", set 2642, i.e. 2516×1.05=2641.8, in Pr. 90.
(The value displayed has been converted into a value for internal use. Hence, simple addition of a given value to the displayed value has no significance.)

■ To set the motor constants without using the offline auto tuning data
The Pr. 92 and Pr. 93 motor constants may either be entered in [mΩ] or in [mH]. Before starting operation, confirm which motor constant unit is used.

● To enter the Pr. 92 and Pr. 93 motor constants in [mΩ]

<Operating procedure>

1. Set "801" in Pr. 77. Only when the Pr. 80 and Pr. 81 settings are other than "9999", the parameter values of the motor constants (Pr. 90 to Pr. 94) can be displayed. Though the parameter values of other than the motor constants (Pr. 90 to Pr. 94) can also be displayed, they are parameters for manufacturer setting and should be handled carefully without misuse.
2. Set any of the following values in Pr. 71:

		Star Connection Motor	Delta Connection Motor
Setting	Standard motor	5	6
	Constant-torque motor	15	16

3. In the parameter setting mode, read the following parameters and set desired values:

Parameter Number	Name	Setting Range	Setting Increments	Factory Setting
90	Motor constant R1	0 to 400mΩ, 9999	0.01mΩ	9999
91	Motor constant R2	0 to 400mΩ, 9999	0.01mΩ	9999
92	Motor constant X1	0 to 3600mΩ, 9999	0.1mΩ	9999
93	Motor constant X2	0 to 3600mΩ, 9999	0.1mΩ	9999
94	Motor constant X	0 to 100Ω, 9999	0.01Ω	9999

4. Refer to the following table and set Pr. 84:

Parameter Number	Name	Setting Range	Setting Increments	Factory Setting
84	Rated motor frequency	50 to 120Hz	0.01Hz	60Hz<50Hz>

5. Return the Pr. 77 setting to the original value.

Note: 1. Pr.90 to Pr. 94 values may only be read when the Pr. 80 and Pr. 81 settings are other than "9999" (advanced magnetic flux vector control selected).
2. Set "9999" in Pr. 90 to Pr. 94 to use the standard motor constants (including those for the constant-torque motor).
3. If "star connection" is mistaken for "delta connection" or vice versa during setting of Pr. 71, advanced magnetic flux vector control cannot be exercised normally.

- To enter the Pr. 92 and Pr. 93 motor constants in [mH]

<Operating procedure>

1. Set "801" in Pr. 77. Only when the Pr. 80 and Pr. 81 settings are other than "9999", the parameter values of the motor constants (Pr. 90 to Pr. 94) can be displayed. Though the parameter (Pr. 82 to Pr. 99) values of other than the motor constants (Pr. 90 to Pr. 94) can also be displayed, they are parameters for manufacturer setting and should be handled carefully without misuse.
2. Set any of the following values in Pr. 71:
   - Standard motor ····· Pr. 71 = “0”
   - Constant-torque motor ····· Pr. 71 = “1”
3. In the parameter setting mode, read the following parameters and set desired values:

Parameter Number	Name	Setting Range	Setting Increments	Factory Setting
90	Motor constant R1	0 to 400mΩ, 9999	0.01mΩ	9999
91	Motor constant R2	0 to 400mΩ, 9999	0.01mΩ	9999
92	Motor constant L1	0 to 400mH, 9999	0.01mH	9999
93	Motor constant L2	0 to 400mH, 9999	0.01mH	9999
94	Motor constant X	0 to 100%	0.01%	9999

4. Refer to the following table and set Pr. 84:

Parameter Number	Name	Setting Range	Setting Increments	Factory Setting
84	Rated motor frequency	50 to 120Hz	0.01Hz	60Hz<50Hz>

5. Return the Pr. 77 setting to the original value.

Note: 1. Pr.90 to Pr. 94 values may only be read when the Pr. 80 and Pr. 81 settings are other than "9999" (advanced magnetic flux vector control selected).
2. Set "9999" in Pr. 90 to Pr. 94 to use the standard motor constants (including those for the constant-torque motor).

Pr. 89 ⇒ Refer to Pr. 80.

Pr. 95 "online auto tuning selection"

Related parameters

Pr. 71 "applied motor"
Pr. 80 "motor capacity"
Pr. 81 "number of motor poles"
Pr. 83 "rated motor voltage"
Pr. 84 "rated motor frequency"
Pr. 89 "speed control gain"
Pr. 90 to Pr. 94 (motor constants)
Pr. 96 "auto tuning setting/status"

By online auto tuning, the motor conditions are tuned rapidly at the start. This enables precise operation unaffected by motor temperatures and steady high-torque operation down to super-low speed. After setting the Pr. 80 and Pr. 81 values, select online auto tuning with Pr. 95.

- Online auto tuning
  Use this function when steady high-torque operation is required for low-speed operation under advanced magnetic flux vector control.
  - Before starting the online auto tuning, perform the offline auto tuning. Data must be calculated.

Parameter Number	Factory Setting	Setting Range	Remarks
95	0	0, 1	1: Online auto tuning

<Operating conditions>

- Data required for online auto tuning is calculated in offline auto tuning. Before starting the operation of this function, always execute the offline auto tuning once more. The offline auto tuning is also required for use of the Mitsubishi standard motor (SF-LHA) or constant-torque motor (SF-LHCA).
- Offline auto tuning should be carried out with 101 (motor running) set in Pr. 96 and with the motor disconnected from the load. (The motor may be connected with inertia load.)

<Operating procedure>

1) Read the Pr. 96 value and make sure that its setting is "3 or 103" (offline auto tuning complete).
2) Set "1" in Pr. 95 to select the online auto tuning.
3) Before starting operation, make sure that the following parameter values have been set:

Parameter Number	Description
9	(Used as either the rated motor current or electronic overcurrent protection parameter)
71	Applied motor
80	Motor capacity (down to one rank lower)
81	Number of motor poles

4) Give the run command in the PU or external operation mode.

Note:
1. If any of the inverter starting conditions are not satisfied, e.g. when MRS is input, if the set frequency is lower than the starting frequency (Pr. 13) value, or during an inverter error, the online auto tuning is not activated.
2. For a restart during deceleration or DC dynamic brake operation, the online auto tuning is not activated.
3. The online auto tuning is invalid for programmed operation or jog operation.
4. When automatic restart after instantaneous power failure is selected, it overrides the online auto tuning.
5. For use in vertical lift application, examine the use of a brake sequence for brake opening timing at the start. Though the tuning ends in **about a maximum of 2seconds** after a start, enough torque is not provided during that period. Therefore, note that the load may drop with gravity.
6. Zero current detection and output current detection are also valid during the online auto tuning.
7. The RUN signal is not output during the online auto tuning. The RUN signal switches on at a start.
8. When programmed operation is selected (Pr. 79=5), the online auto tuning is invalid and is not executed.
9. If the period between inverter stop and restart is within 4 seconds, the online auto tuning is executed but operation will not reflect the tuning results.

Pr. 96 ⇒ Refer to Pr. 82.

Pr. 100 "V/F1 (first frequency)"

Pr. 101 "V/F1 (first frequency voltage)"

Pr. 102 "V/F2 (second frequency)"

Pr. 103 "V/F2 (second frequency voltage)"

Pr. 104 "V/F3 (third frequency)"

Pr. 105 "V/F3 (third frequency voltage)"

Pr. 106 "V/F4 (fourth frequency)"

Pr. 107 "V/F4 (fourth frequency voltage)"

Pr. 108 "V/F5 (fifth frequency)"

Pr. 109 "V/F5 (fifth frequency voltage)"

Related parameters

Pr. 19 "base frequency voltage"
Pr. 47 "second V/F (base frequency)"
Pr. 60 "intelligent mode selection"
Pr. 71 "applied motor"
Pr. 113 "third V/F (base frequency)"

You can make a dedicated V/F pattern by using V/F (frequency Voltage/Frequency) control to set V/F characteristics from the start to the basic frequency and basic voltage as desired.

- Desired V/F characteristics can be set by presetting V/F1 (first frequency voltage/first frequency), V/F2, V/F3, V/F4 and V/F5 in the corresponding parameters.

Parameter Number	Factory Setting	Setting Range	Remarks
100	9999	0 to 400Hz, 9999	Set 2 in Pr. 71 and a value other than 9999 in Pr. 19. These functions are not activated when any of 1 to 8 is set in Pr. 60.
101	0	0 to 1000V	
102	9999	0 to 400Hz, 9999	
103	0	0 to 1000V	
104	9999	0 to 400Hz, 9999	
105	0	0 to 1000V	
106	9999	0 to 400Hz, 9999	
107	0	0 to 1000V	
108	9999	0 to 400Hz, 9999	
109	0	0 to 1000V	

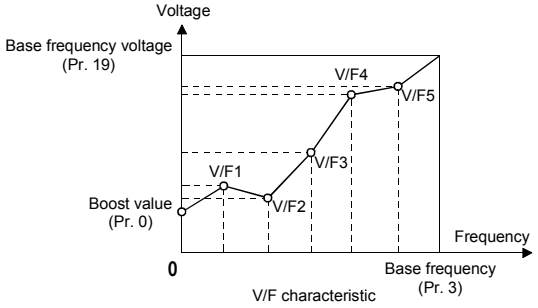

<Setting>

(1) Confirm the settings of Pr. 19, Pr. 60 and Pr. 71.

Parameter Number	Description
19	Set the rated motor voltage. This function is not activated if its value is "9999" (factory setting).
60	Set "0" (ordinary operation mode).
71	Set "2" (V/F 5-point flexible characteristic).

(2) Set the desired frequencies and voltages in Pr. 100 to Pr. 109.

・ The setting must satisfy the following relationship: F1≠F2≠F3≠F4≠F5≠Pr. 19 "base frequency".
If the set frequencies are the same, a write error occurs.
If any frequency setting is "9999", its point is ignored.

Note:
1. The V/F 5-point flexible characteristic functions for V/F control only. It does not function for advanced magnetic flux vector control.
2. The V/F 5-point flexible characteristic does not function when Pr. 60 is selected.
3. The frequency voltage setting should be equal to or less than the Pr. 3 and Pr. 19 settings.
4. Pr. 19 must be set. (When Pr. 19 = "9999", Pr. 71 cannot be set to "2" (5-point flexible V/F characteristic).)
5. If "2" is set in Pr. 71, Pr. 47 and Pr. 113 do not function.
6. When "2" is set in Pr. 71, the electronic overcurrent protection is calculated for a standard motor.

Pr. 110, Pr. 111 ⇒ Refer to Pr. 7.

Pr. 112 ⇒ Refer to Pr. 0.

Pr. 113 ⇒ Refer to Pr. 3.

Pr. 114, Pr. 115 ⇒ Refer to Pr. 48.

Pr. 116 ⇒ Refer to Pr. 42.

Pr. 117 "station number"

Pr. 118 "communication speed"

Pr. 119 "stop bit length/data length"

Pr. 120 "parity check presence/absence"

Pr. 121 "number of communication retries"

Pr. 122 "communication check time interval"

Pr. 123 "waiting time setting"

Pr. 124 "CR, LF presence/absence selection"

Used to make the required settings for communication between the inverter and personal computer.
Using the inverter setup software, parameter setting, monitoring, etc. can be done efficiently.

- The motor can be run from the PU connector of the inverter through RS-485 communication.
  Communication specifications

Conforming standard			RS-485
Number of inverters connected			1:N (max. 32 inverters)
Communication speed			Selected between 19200, 9600 and 4800bps
Control protocol			Asynchronous
Communication method			Half-duplex
Communication specifications	Character system		ASCII (7 bits/8 bits) selectable
	Stop bit length		Selectable between 1 bit and 2 bits.
	Terminator		CR/LF (presence/absence selectable)
	Check system	Parity check	Selected between presence (even/odd) or absence
		Sumcheck	Present
	Waiting time setting		Selectable between presence or absence

- For the data codes of the parameters, refer to the data code list in the appendices.

Parameter Number	Factory Setting	Setting Range	
117	0	0 to 31	
118	192	48, 96, 192	
119	1	Data length 8	0, 1
		Data length 7	10, 11
120	2	0, 1, 2	
121	1	0 to 10, 9999	
122	0<9999>	0 to 999.8 sec, 9999	
123	9999	0 to 150ms, 9999	
124	1	0, 1, 2	

<Setting>

To make communication between the personal computer and inverter, the communication specifications must be set to the inverter initially. If initial setting is not made or there is a setting fault, data transfer cannot be made.
Note: After making the initial setting of the parameters, always reset the inverter. After you have changed the communication-related parameters, communication cannot be made if the inverter is not reset.

Parameter Number	Name	Setting		Description
117	Station number	0 to 31		Station number specified for communication from the PU connector. Set the inverter station numbers when two or more inverters are connected to one personal computer.
118	Communi-cation speed	48		4800 baud
		96		9600 baud
		192		19200 baud
119	Stop bit length/data length	8 bits	0	Stop bit length 1 bit
			1	Stop bit length 2 bits
		7 bits	10	Stop bit length 1 bit
			11	Stop bit length 2 bits
120	Parity check presence/ absence	0		Absent
		1		Odd parity present
		2		Even parity present
121	Number of communica-tion retries	0 to 10		Set the permissible number of retries at occurrence of data receive error. If the number of consecutive errors exceeds the permissible value, the inverter will come to an alarm stop.
		9999 (65535)		If a communication error occurs, the inverter will not come to an alarm stop. At this time, the inverter can be coasted to a stop by MRS or RESET input. During an error, the light fault signal (LF) is given to the open collector output. Allocate the used terminal with any of Pr. 190 to Pr. 195 (output terminal function selection).
122	Communi-cation check time interval	0		No communication
		0.1 to 999.8		Set the communication check time [sec] interval. If a no-communication state persists for longer than the permissible time, the inverter will come to an alarm stop.
		9999		Communication check halt.
123	Waiting time setting	0 to 150ms		Set the waiting time between data transmission to the inverter and response.
		9999		Set with communication data.
124	CR, LF presence/ absence selection	0		Without CR/LF
		1		With CR
		2		With CR/LF

<Computer programming>

(1) Communication protocol

Data communication between the computer and inverter is performed using the following procedure:

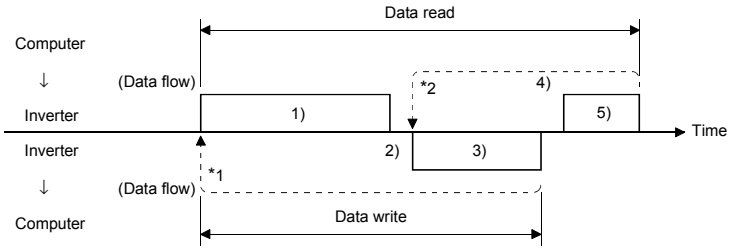

*1. If a data error is detected and a retry must be made, execute retry operation from the user program. The inverter comes to an alarm stop if the number of consecutive retries exceeds the parameter setting.

*2. On receipt of a data error occurrence, the inverter returns “retry data 3” to the computer again. The inverter comes to an alarm stop if the number of consecutive data errors reaches or exceeds the parameter setting.

(2) Communication operation presence/absence and data format types

Communication operation presence/absence and data format types are as follows:

No.	Operation		Run Command	Running Frequency	Parameter Write	Inverter Reset	Monitoring	Parameter Read
1)	Communication request is sent to the inverter in accordance with the user program.		A’	A	A	A	B	B
2)	Inverter data processing time		Present	Present	Present	Absent	Present	Present
3)	Reply data from the inverter (Data 1 is checked for error)	No error Request accepted	C	C	C	Absent	E E’	E
		With error Request rejected	D	D	D	Absent	F	F
4)	Computer processing delay time		Absent	Absent	Absent	Absent	G	G
5)	Answer from computer in response to reply data 3 (Data 3 is checked for error)	No error No processing	Absent	Absent	Absent	Absent	G	G
		With error data 3 is output	Absent	Absent	Absent	Absent	H	H

(3) Data format

Hexadecimal data is used. Data is automatically transferred in ASCII between the computer and inverter.

1) Data format types

(1) Communication request data from computer to inverter

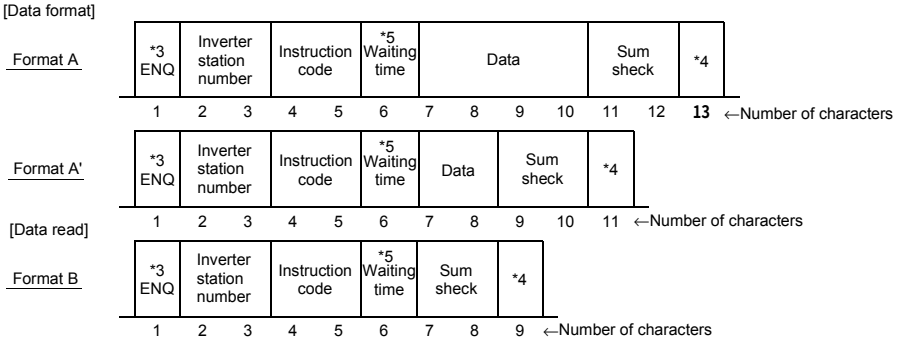

Note: 1. The inverter station numbers may be set between H00 and H1F (stations 0 and 31) in hexadecimal.
2. *3 indicates the control code.
3. *4 indicates the CR or LF code.
When data is transmitted from the computer to the inverter, codes CR (carriage return) and LF (line feed) are automatically set at the end of a data group on some computers. In this case, setting must also be made from the inverter according to the computer.
Also, the presence and absence of the CR and LF codes can be selected using Pr. 124.
4. *5: When Pr.123 "waiting time setting" ≠ 9999, create the communication request data with no "waiting time" in the data format. (The number of characters decreases by 1.)

2) Reply data from inverter to computer during data write

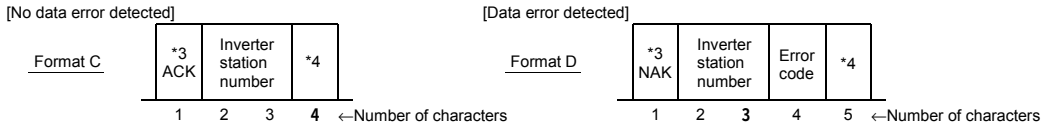

3) Reply data from inverter to computer during data read

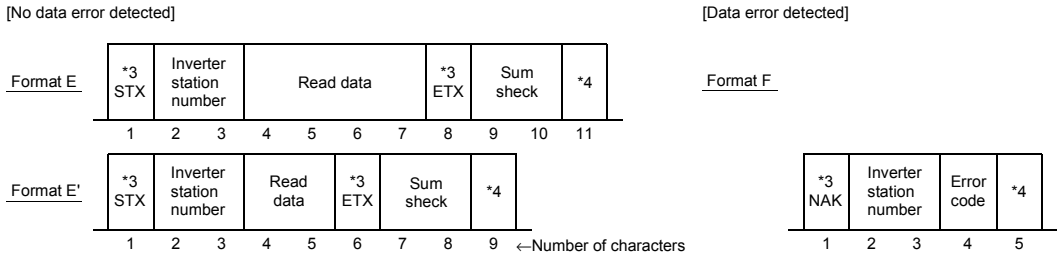

4) Reply data from computer to inverter during data read

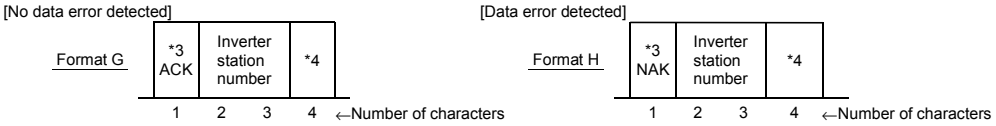

(4) Data definitions

1) Control codes

Signal	ASCII Code	Description
STX	H02	Start of Text (Start of data)
ETX	H03	End of Text (End of data)
ENQ	H05	Enquiry (Communication request)
ACK	H06	Acknowledge (No data error detected)
LF	H0A	Line Feed
CR	H0D	Carriage Return
NAK	H15	Negative Acknowledge (Data error detected)

2) Inverter station number
Specify the station number of the inverter which communicates with the computer.

3) Instruction code
Specify the processing request (e.g. operation, monitoring) given by the computer to the inverter. Hence, the inverter can be run and monitored in various ways by specifying the instruction code as appropriate.

4) Data

Indicates the data such as frequency and parameters transferred to and from the inverter. The definitions and ranges of set data are determined in accordance with the instruction codes. (Refer to Appendix 1.)

5) Waiting time

Specify the waiting time between the receipt of data at the inverter form the computer and the transmission of reply data. Set the waiting time in accordance with the response time of the computer between 0 and 150msec in 1msec increments .

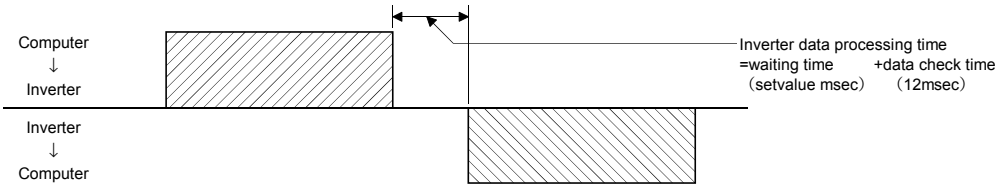

6) Sum check code

The sum check code is 2-digit ASCII (hexadecimal) representing the lower 1 byte (8 bits) of the sum (binary) derived from the checked ASCII data.

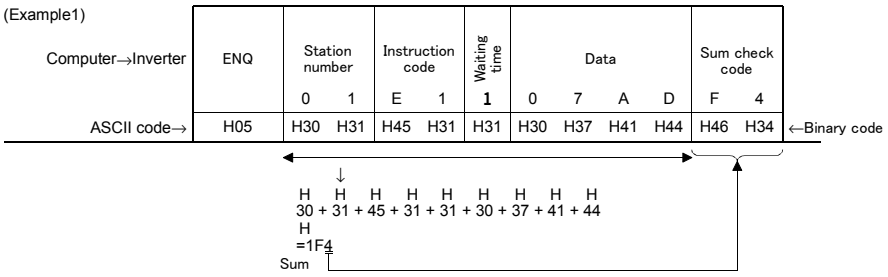

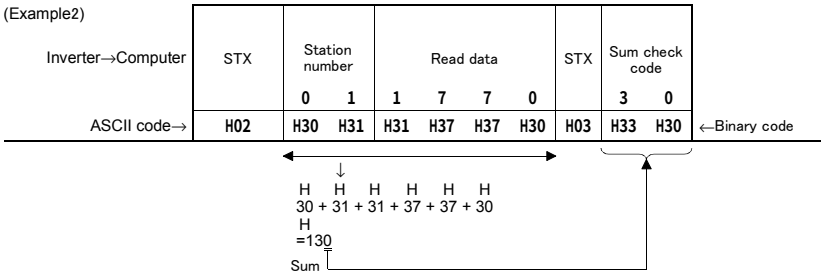

7) Error code

If any error is found in the data received by the inverter, its definition is sent back to the computer together with the NAK code.

Note: 1. When the data from the computer has an error, the inverter will not accept that data.
2. Any data communication, e.g. run command, monitoring, is started when the computer gives a communication request. Without the computer's command, the inverter does not return any data. For monitoring, therefore, design the program to cause the computer to provide a data read request as required.
3. Data for link parameter expansion setting differs as indicated below between access to Pr. 0-Pr. 99 values and access to Pr. 100-Pr. 905:

		Instruction Code	Data
Link parameter expansion setting	Read	H7F	H00: Pr. 0 to Pr. 99 values are accessible.
	Write	HFF	H00: Pr. 0 to Pr. 99 values are accessible. H01: Pr. 100 to Pr. 159, Pr. 200 to Pr. 231 and Pr. 900 to Pr. 905 values are accessible. H02: Pr. 160 to Pr. 199 and Pr. 232 to Pr. 285 values are accessible. H09: Pr. 990 value is accessible.

Instructions for the program

(1) When there is an error in data from the computer, the inverter does not accept that data. Therefore, always insert a data error retry program in the user program.

(2) Since any data communication, such as operation command or monitoring, is always requested by the computer, the inverter will not return data without the computer's request. Hence, design the program so that the computer gives a data read request for monitoring, etc. as required.

(3) Program example

When the operation mode is switched to computer link operation

```
 10 OPEN "COM1: 9600, E, 8, 2, HD" AS#1
 20 COMST1, 1, 1: COMST1, 2, 1
 30 ON COM (1) GOSUB*REC
 40 COM (1) ON
 50 D$= "01FB10000"
 60 S=0
 70 FOR I=1 TO LEN (D$)
 80 A$=MID$ (D$, I, 1)
 90 A=ASC (A$)
100 S=S+A
110 NEXTI
120 D$=CHR$ (&H5) +D$+RIGHT$ (HEX$ (S) , 2)
130 PRINT#1, D$
140 GOTO 50
1000 *REC
1010 IF LOC (1)=0 THEN RETURN
1020 PRINT "RECEIVE DATA"
1030 PRINT INPUT$ (LOC (1) , #1)
1040 RETURN
```

Initial setting of I/O file
: Communication file opening
: Circuit control signal (RS, ER) ON/OFF setting
: Interrupt definition at data receive
: Interrupt enable

Transmission data setting

Sum code calculation
: Addition of control and sum codes

Data transmission

Interrupt data receive
: Interrupt occurrence at data receive

General flowchart

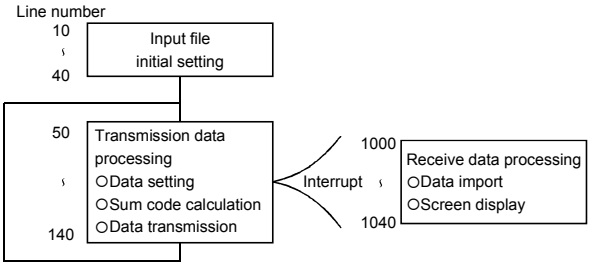

⚠ CAUTION

⚠ **When the inverter's communication check time interval is not set, interlocks are provided to disable operation to prevent hazard. Always set the communication check time interval before starting operation.**

⚠ **Data communication is not started automatically but is made only when the computer provides a communication request. If communication is disabled during operation due to signal cable breakage etc, the inverter cannot be stopped. When the communication check time interval has elapsed, the inverter will come to an alarm stop (E.PUE).**
The inverter can be coasted to a stop by switching on its RES signal or by switching power off.

⚠ **If communication is halted due to signal cable breakage, computer fault etc., the inverter does not detect such a fault. This should be fully noted.**

<Setting items and set data>

After completion of parameter setting, set the instruction codes and data and start communication from the computer to allow various types of operation control and monitoring.

<table>
<tr><th>No.</th><th colspan="3">Item</th><th>Instruction Code</th><th>Description</th><th>Number of Data Digits</th></tr>
<tr><td rowspan="2">1</td><td colspan="2" rowspan="2">Operation mode</td><td>Read</td><td>H7B</td><td>H0001: External operation
H0002: Communication operation</td><td rowspan="2">4 digits</td></tr>
<tr><td>Write</td><td>HFB</td><td>H0001: External operation
H0002: Communication operation</td></tr>
<tr><td rowspan="6">2</td><td rowspan="6">Monitoring</td><td colspan="2">Output frequency [speed]</td><td colspan="2">H6F</td><td>H0000 to HFFFF: Output frequency (hexadecimal) in 0.01Hz increments
[Speed (hexadecimal) in 1r/min increments if Pr. 37 = 1 to 9998 or Pr. 144 = 2 to 10, 102 to 110.]</td><td>4 digits</td></tr>
<tr><td colspan="2">Output current</td><td colspan="2">H70</td><td>H0000 to HFFFF: Output current (hexadecimal) in 0.1A increments</td><td>4 digits</td></tr>
<tr><td colspan="2">Output voltage</td><td colspan="2">H71</td><td>H0000 to HFFFF: Output voltage (hexadecimal) in 0.1V increments</td><td>4 digits</td></tr>
<tr><td colspan="2">Special monitor</td><td colspan="2">H72</td><td>H0000 to HFFFF: Monitored data selected by instruction code HF3</td><td>4 digits</td></tr>
<tr><td colspan="2" rowspan="2">Special monitor selection No.</td><td>Read</td><td>H73</td><td rowspan="2">H01 to H0E Monitor selection data
<table>
<tr><th>Data</th><th>Description</th><th>Incre-ments</th><th>Data</th><th>Description</th><th>Incre-ments</th></tr>
<tr><td>H01</td><td>Output frequency</td><td>0.01Hz</td><td>H09</td><td>Regenerative brake</td><td>0.1%</td></tr>
<tr><td>H02</td><td>Output current</td><td>0.01A</td><td>H0A</td><td>Electronic overcurrent protection load factor</td><td>0.1%</td></tr>
<tr><td>H03</td><td>Output voltage</td><td>0.1V</td><td>H0B</td><td>Output current peak value</td><td>0.01A</td></tr>
<tr><td>H05</td><td>Frequency setting</td><td>0.01Hz</td><td>H0C</td><td>Converter output voltage peak value</td><td>0.1V</td></tr>
<tr><td>H06</td><td>Running speed</td><td>r/min</td><td>H0D</td><td>Input power</td><td>0.1kW</td></tr>
<tr><td>H07</td><td>Motor torque</td><td>0.1%</td><td>H0E</td><td>Output power</td><td>0.1kW</td></tr>
</table></td><td rowspan="2">2 digits</td></tr>
<tr><td>Write</td><td>HF3</td></tr>
<tr><td colspan="2">Alarm definition</td><td colspan="2">H74 to H77</td><td>H0000 to HFFFF: Two most recent alarm definitions
Read data: [Example] H30A0
(Previous alarm ..... THT)
(Most recent alarm ..... OPT)
 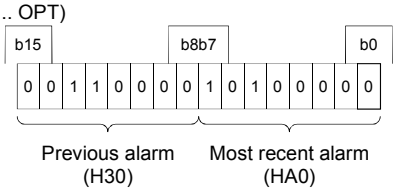

Alarm data
<table>
<tr><th>Data</th><th>Description</th><th>Data</th><th>Description</th><th>Data</th><th>Description</th></tr>
<tr><td>H00</td><td>No alarm</td><td>H51</td><td>UVT</td><td>HB1</td><td>PUE</td></tr>
<tr><td>H10</td><td>0C1</td><td>H60</td><td>OLT</td><td>HB2</td><td>RET</td></tr>
<tr><td>H11</td><td>0C2</td><td>H70</td><td>BE</td><td>HC1</td><td>CTE</td></tr>
<tr><td>H12</td><td>0C3</td><td>H80</td><td>GF</td><td>HC2</td><td>P24</td></tr>
<tr><td>H20</td><td>0V1</td><td>H81</td><td>LF</td><td>HD5</td><td>MB1</td></tr>
<tr><td>H21</td><td>0V2</td><td>H90</td><td>OHT</td><td>HD6</td><td>MB2</td></tr>
<tr><td>H22</td><td>0V3</td><td>HA0</td><td>OPT</td><td>HD7</td><td>MB3</td></tr>
<tr><td>H30</td><td>THT</td><td>HA1</td><td>OP1</td><td>HD8</td><td>MB4</td></tr>
<tr><td>H31</td><td>THM</td><td>HA2</td><td>OP2</td><td>HD9</td><td>MB5</td></tr>
<tr><td>H40</td><td>FIN</td><td>HA3</td><td>OP3</td><td>HDA</td><td>MB6</td></tr>
<tr><td>H50</td><td>IPF</td><td>HB0</td><td>PE</td><td>HDB</td><td>MB7</td></tr>
</table></td><td>2 digits</td></tr>
</table>

<table>
<tr><th>No.</th><th>Item</th><th>Instruction Code</th><th>Description</th><th>Number of Data Digits</th></tr>
<tr><td>3</td><td>Run command</td><td>HFA</td><td>H00 to HFF: Run command
b7 b0
0 0 0 0 0 0 1 0
(For example 1)
[Example 1] H02
... Forward rotation
[Example 2] H00
... Stop
b0: ———
b1: Forward rotation (STF)
b2: Reverse rotation (STR)
b3: ———
b4: ———
b5: ———
b6: ———
b7: ———</td><td>2 digits</td></tr>
<tr><td>4</td><td>Inverter status monitor</td><td>H7A</td><td>H00 to HFF: Inverter status monitor
b7
0 0 0 0 0 0 1 0
(For example 1)
[Example 1] H02
... During forward rotation
[Example 2] H80
... Stop due to alarm
b0: Inverter running (RUN) *
b1: Forward rotation (STF)
b2: Reverse rotation (STR)
b3: Up to frequency (SU) *
b4: Overload (OL) *
b5: Instantaneous power failure (IPF) *
b6: Frequency detection (FU) *
b7: Alarm occurrence *
*The output data depends on the Pr. 190 to Pr. 195 settings.</td><td>2 digits</td></tr>
<tr><td>5</td><td>Running frequency write (E^2ROM)</td><td>HEE</td><td>H0000 to H9C40: 0.01Hz increments (hexadecimal)
To change the running frequency consecutively, write data to the inverter RAM. (Instruction code: HED)</td><td>4 digits</td></tr>
<tr><td>6</td><td>Inverter reset</td><td>HFD</td><td>H9696: Resets the inverter.
As the inverter is reset on start of communication by the computer, the inverter cannot send reply data back to the computer.</td><td>4 digits</td></tr>
<tr><td>7</td><td>All clear</td><td>HFC</td><td>All parameters return to the factory settings.
Any of four different clear operations is performed according to the data.
<table>
<tr><th>Pr. / Data</th><th>Communi-cation Pr.</th><th>Calibration</th><th>Other Pr.</th><th>HEC HF3 HFF</th></tr>
<tr><td>H9696</td><td>○</td><td>×</td><td>○</td><td>○</td></tr>
<tr><td>H9966</td><td>○</td><td>○</td><td>○</td><td>○</td></tr>
<tr><td>H5A5A</td><td>×</td><td>×</td><td>○</td><td>○</td></tr>
<tr><td>H55AA</td><td>×</td><td>○</td><td>○</td><td>○</td></tr>
</table>
When all parameter clear is executed for H9696 or H9966, communication-related parameter settings also return to the factory settings. When resuming operation, set the parameters again.</td><td>4 digits</td></tr>
<tr><td>8</td><td>User clear</td><td>HFC</td><td>H9669: User clear is made.
<table>
<tr><th>Communi-cation Pr.</th><th>Calibration</th><th>Other Pr.</th><th>HEC HFC HFF</th></tr>
<tr><td>○</td><td>×</td><td>○</td><td>○</td></tr>
</table></td><td>4 digits</td></tr>
<tr><td>9</td><td>Parameter write</td><td>H80 to HE3</td><td rowspan="2">Refer to the data list (Appendix 1) and write and/or read parameter values as required.
Note that some parameters may not be accessible.</td><td rowspan="2">4 digits</td></tr>
<tr><td>10</td><td>Parameter read</td><td>H00 to H63</td></tr>
<tr><td rowspan="2">11</td><td rowspan="2">Link parameter expansion setting</td><td>Read</td><td>H7F</td><td rowspan="2">H00 to H6C and H80 to HEC parameter values are changed.
H00: Pr. 0 to Pr. 99 values are accessible.
H01: Pr. 100 to Pr. 159 , Pr. 200 to Pr. 231 and Pr. 900 to Pr. 905 values are accessible.
H02: Pr. 160 to Pr. 199 and Pr. 232 to Pr. 285 values are accessible.
H09: Pr. 990 value is accessible.</td><td rowspan="2">2 digits</td></tr>
<tr><td>Write</td><td>HFF</td></tr>
<tr><td rowspan="2">12</td><td rowspan="2">Second parameter changing (Code FF = 1)</td><td>Read</td><td>H6C</td><td rowspan="2">When setting the programmed operation (data code H3D to H5A, H8D to HAD) parameter
H00: Time
H01: Time
H02: Rotation direction
→ 6 3 3 B
Time(Min.) Min. (Sec)
When setting the bias/gain (data code H5E to H6A, HDE to HED) parameter
H00: Offset/gain
H01: Analog
H02: Analog value of terminal</td><td rowspan="2">2 digits</td></tr>
<tr><td>Write</td><td>HEC</td></tr>
</table>

<Error code List>

The corresponding error code in the following list is displayed if an error is detected in any communication request data form the computer.

Error Code	Item	Definition	Inverter Operation
H0	Computer NAK error	The number of errors consecutively detected in communication request data from the computer is greater than allowed number of retry times.	Brought to an alarm stop (E.OPT) if error occurs continuously more than the allowable number of retry times.
H1	Parity error	The parity check result does not match the specified parity.	
H2	Sum check error	The sum check code in the computer does not match that of the data received by the inverter.	
H3	Protocol error	Data received by the inverter is in the wrong protocol, data receive is not completed within the given time, or CR and LF are not as set in the parameter.	
H4	Framing error	The stop bit length is not as specified.	
H5	Overrun error	New data has been sent by the computer before the inverter completes receiving the preceding data.	
H6	———	———	———
H7	Character error	The character received is invalid (other than 0 to 9, A to F, control code).	Does not accept receive data but is not brought to alarm stop.
H8	———	———	———
H9	———	———	———
HA	Mode error	Parameter write was attempted in other than the computer link operation mode or during inverter operation.	Does not accept or receive data but is not brought to alarm stop.
HB	Instruction code error	The specified command does not exist.	
HC	Data range error	Invalid data has been specified for parameter write, frequency setting, etc.	
HD	———	———	———
HE	———	———	———
HF	———	———	———

(5) Communication specifications for RS-485 communication

Operation Location	Item	Operation Mode		
		Communication Operation from PU Connector	External Operation	Computer Link Operation (inboard option used)
Computer user program via PU connector	Run command (start)	Enable	Disable	Disable
	Running frequency setting	Enable	Enable (Combined mode)	Disable
	Monitoring	Enable	Enable	Enable
	Parameter write	Enable (*4)	Disable (*4)	Disable (*4)
	Parameter read	Enable	Enable	Enable
	Inverter reset	Enable	Enable	Enable
	Stop command (*3)	Enable	Enable	Enable
Computer user program via inboard option	Run command	Disable	Disable	Enable (*1)
	Running frequency setting	Disable	Disable	Enable (*1)
	Monitoring	Enable	Enable	Enable
	Parameter write	Disable (*4)	Disable (*4)	Enable (*4)
	Parameter read	Enable	Enable	Enable
	Inverter reset	Disable	Disable	Enable
	Stop command (*3)	Enable	Enable	Enable
Control circuit terminal	Inverter reset	Enable	Enable	Enable
	Run command	Disable	Enable	Enable (*1)
	Running frequency setting	Disable	Enable	Enable (*1)

(＊1) As set in the operation and speed command write parameters.

(＊2) At occurrence of RS-485 communication fault, the inverter cannot be reset from the computer.

(＊3) As set in Pr. 75.

(＊4) As set in Pr. 77.

(6) Operation at alarm occurrence

Fault Location	Description		Operation Mode		
			Communication Operation (PU connector)	External Operation	Computer link Operation (inboard option used)
Inverter fault	Inverter operation		Stop	Stop	Stop
	Communication	PU connector	Continued	Continued	Continued
		Inboard option	Continued	Continued	Continued
Communication error (Communication from PU connector)	Inverter operation		Stop/continued (*5)	Continued	Continued
	Communication	PU connector	Stop	Stop	Stop
		Inboard option	Continued	Continued	Continued
Communication error (Inboard option)	Inverter operation		Continued	Continued	Stop/continued (*5)
	Communication	PU connector	Continued	Continued	Continued
		Inboard option	Stop	Stop	Stop

（＊5） Can be selected using the corresponding parameter (factory-set to stop).

(7) Communication error

Fault Location	Error Message	Remarks
Communication error (Communication from PU connector)	Not displayed	Error code is E.PUE
Communication error (Inboard option)	E.OPT	

Pr. 128 "PID action selection"

Pr. 129 "PID proportional band"

Pr. 130 "PID integral time"

Pr. 131 "upper limit"

Pr. 132 "lower limit"

Pr. 133 "PID action set point for PU operation"

Pr. 134 "PID differential time"

Related parameters

Pr. 73 "0-5V/0-10V selection"
Pr. 79 "operation mode selection"
Pr. 180 to Pr. 186
(input terminal assignment)
Pr. 191 to Pr. 194
(output terminal assignment)
Pr. 902 to Pr. 905
(frequency setting voltage
(current) biases and gains)

The inverter can be used to exercise process control, e.g. flow rate, air volume or pressure.

- The voltage input signal (0-±5V or 0-±10V) or Pr. 133 setting is used as a set point and the 4-20mA current input signal used as a feedback value to constitute a feedback system for PID control.

Parameter Number	Factory Setting	Setting Range	Remarks
128	10	10, 11, 20, 21	
129	100%	0.1 to 1000%, 9999	9999: No proportional control
130	1 sec	0.1 to 3600 sec, 9999	9999: No integral control
131	9999	0 to 100%, 9999	9999: Function invalid
132	9999	0 to 100%, 9999	9999: Function invalid
133	0%	0 to 100%	
134	9999	0.01 to 10.00 sec, 9999	9999: No differential control

<Setting>

(1) Basic PID control configuration

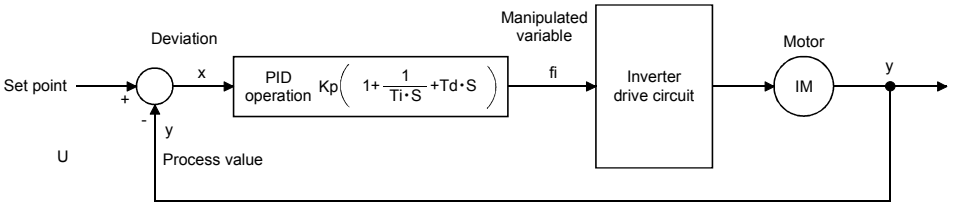

Kp: Proportional constant Ti: Integral time S: Operator Td: Differential time

(2) PID action overview

1) PI action

A combination of proportional control action (P) and integral control action (I) for providing a manipulated variable in response to deviation and changes with time.

[Operation example for stepped changes of process value]

Note: PI action is the sum of P and I actions.

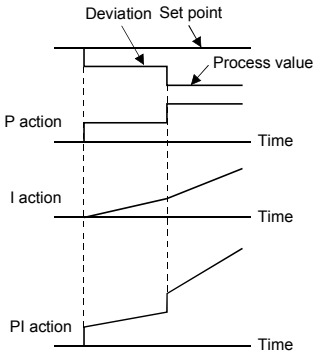

2) PD action

A combination of proportional control action (P) and differential control action (D) for providing a manipulated variable in response to deviation speed to improve the transient characteristic.

[Operation example for proportional changes of process value]

Note: PD action is the sum of P and D actions.

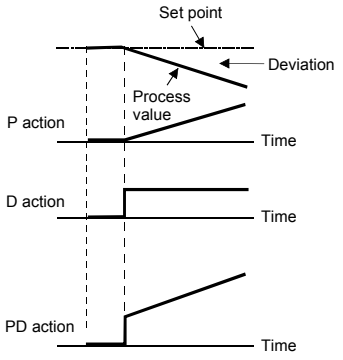

3) PID action

The PI action and PD action are combined to utilize the advantages of both actions for control.

Note: The PID action is the sum of P and I and D actions.

4) Reverse action

Increases the manipulated variable (output frequency) if deviation X (set point - process value) is positive, and decreases the manipulated variable if deviation is negative.

5) Forward action

Increases the manipulated variable (output frequency) if deviation X (set point - process value) is negative, and decreases the manipulated variable if deviation is positive.

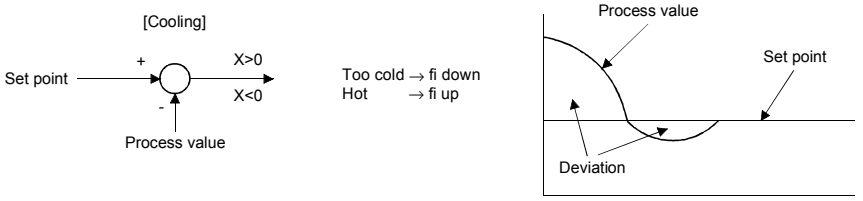

Relationships between deviation and manipulated variable (output frequency)

	Deviation	
	Positive	**Negative**
Reverse action	↗	↘
Forward action	↘	↗

(3) Wiring example

- Sink logic
- Pr.183 = 14
- Pr.192 = 16
- Pr.193 = 14
- Pr.194 = 15

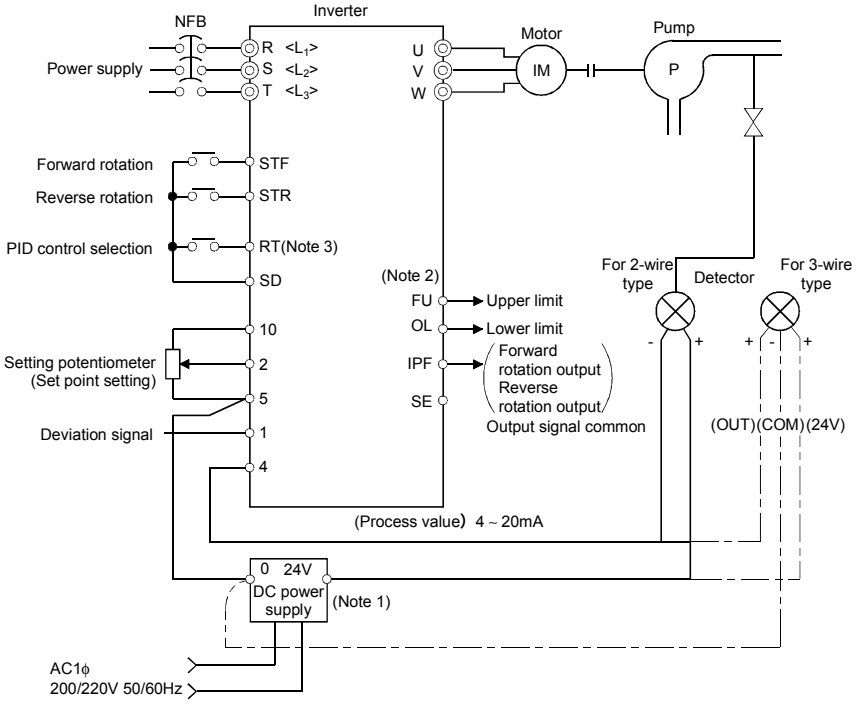

Note: 1. The power supply must be selected in accordance with the power specifications of the detector used.
2. The output signal terminals used depends on the Pr. 191 to Pr. 194 settings.
3. The input signal terminals used depends on the Pr. 180 to Pr. 186 settings.

(4) I/O signals

Signal		Terminal Used	Function	Description	Remarks	
Input	X14	Depending on Pr. 180 to 186	PID control selection	Switch on X14 to select PID control.	Set any of 10, 11, 20 and 21 in Pr. 128.	
	2	2	Set point input	Enter the set point for PID control.		
	1	1	Deviation signal input	Enter the deviation signal calculated externally.		
	4	4	Process value input	Enter the 4-20mA process value signal from the detector.		
Output	FUP	Depending on Pr. 191 to 195	Upper limit output	Output to indicate that the process value signal exceeded the upper limit value.	(Pr. 128 = 20, 21)	Open collector output
	FDN		Lower limit output	Output to indicate that the process value signal exceeded the lower limit value.		
	RL		Forward (reverse) rotation direction output	"Hi" is output to indicate that the output indication of the parameter unit is forward rotation (FWD) or "Low" to indicate that it is reverse rotation (REV) or stop (STOP).	(Pr. 128 = 10, 11, 20, 21)	
	SE	SE	Output terminal common	Common to terminals FUP, FDN and RL		

- To start PID control, switch on the X14 signal. When this signal is off, ordinary inverter operation is performed without the PID action being performed.
- Enter the set point across inverter terminals 2-5 or into Pr. 133 and enter the process value signal across inverter terminals 4-5.
- When entering the externally calculated deviation signal, enter it across terminals 1-5. At this time, set "10" or "11" in Pr. 128.

Item	Entry	Description	
Set point	Across terminals 2-5	Set 0V as 0% and 5V as 100%.	When "1, 3, 5, 11, 13 or 15" is set in Pr. 73 (5V selected for terminal 2).
		Set 0V as 0% and 10V as 100%.	When "0, 2, 4, 10, 12 or 14" is set in Pr. 73 (10V selected for terminal 2).
Set point	Pr.133	Set the set point (%) in Pr. 133.	
Deviation signal	Across terminals 1-5	Set −5V as −100%, 0V as 0% and +5V as +100%.	When "2, 3, 5, 12, 13 or 15" is set in Pr. 73 (5V selected for terminal 1).
		Set −10V as −100%, 0V as 0% and +10V as +100%.	When "0, 1, 4, 10, 11 or 14" is set in Pr. 73 (10V selected for terminal 1).
Process value	Across terminals 4-5	4mA is equivalent to 0% and 20mA to 100%.	

(5) Parameter setting

Parameter Number	Setting	Name	Description		
128	10	PID action selection	For heating, pressure control, etc.	Deviation value signal input (terminal 1)	PID reverse action
	11		For cooling, etc.		PID forward action
	20		For heating, pressure control, etc.	Process value input (terminal 4)	PID reverse action
	21		For cooling, etc.		PID forward action
129	0.1 to 1000%	PID proportional band	If the proportional band is narrow (parameter setting is small), the manipulated variable varies greatly with a slight change of the process value. Hence, as the proportional band narrows, the response sensitivity (gain) improves but the stability deteriorates, e.g. hunting occurs. Gain K = 1/proportional band		
	9999		No proportional control		
130	0.1 to 3600 sec	PID integral time	Time required for the integral (I) action to provide the same manipulated variable as that for the proportional (P) action. As the integral time decreases, the set point is reached earlier but hunting occurs more easily.		
	9999		No integral control.		
131	0 to 100%	Upper limit	Set the upper limit. If the feedback value exceeds the setting, the FUP signal is output. (Process value of 4mA is equivalent to 0% and 20mA to 100%.)		
	9999		No function		
132	0 to 100%	Lower limit	Set the lower limit. (If the process value goes out of the setting range, an alarm can be output. In this case, the process value of 4mA is equivalent to 0% and 20mA to 100%.)		
	9999		No function		
133	0 to 100%	PID action set point for PU operation	Only valid for the PU command in the PU operation or PU/external combined mode. For external operation, the voltage across 2-5 is the set point. (Pr. 902 value is equivalent to 0% and Pr. 903 value to 100%.)		
134	0.01 to 10.00 sec	PID differential time	Time only required for the differential (D) action to provide the same process value as that for the proportional (P) action. As the differential time increases, greater response is made to a deviation change.		
	9999		No differential control.		

(6) Adjustment procedure

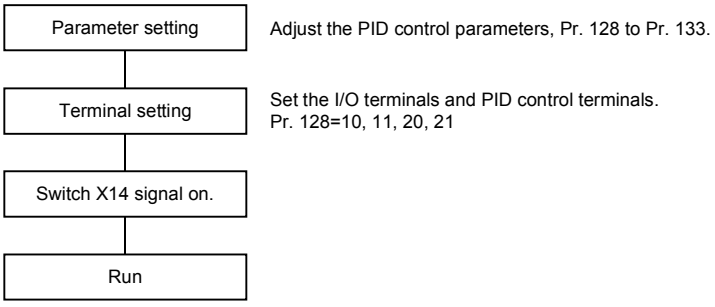

(8) Calibration example

(A detector of 4mA at 0℃ and 20mA at 50℃ is used to adjust the room temperature to 25℃ under PID control. The set point is given to across inverter terminals 2-5 (0-5V).)

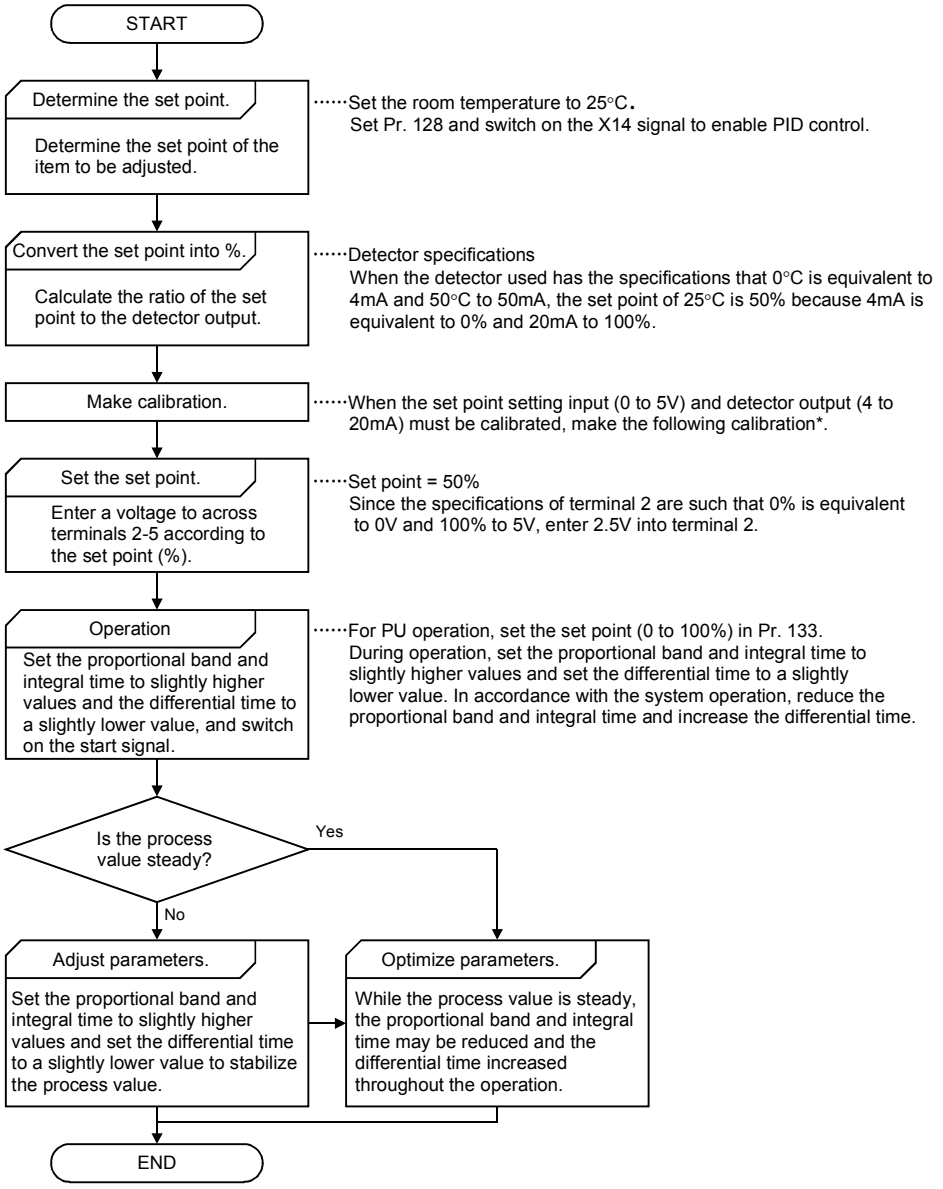

*When calibration is required, use Pr. 902 to Pr. 905 to calibrate the detector output and set point setting input in the PU mode during an inverter stop.

<Set point input calibration>

1. Apply the input voltage of 0% set point setting (e.g. 0V) to across terminals 2-5.
2. Make calibration using Pr. 902. At this time, enter the frequency which should be output by the inverter at the deviation of 0% (e.g. 0Hz).
3. Apply the voltage of 100% set point setting (e.g. 5V) to across terminals 2-5.
4. Make calibration using Pr. 903. At this time, enter the frequency which should be output by the inverter at the deviation of 100% (e.g. 60Hz).

<Detector output calibration>

1. Apply the output current of 0% detector setting (e.g. 4mA) to across terminals 4-5.
2. Make calibration using Pr. 904.
3. Apply the output current of 100% detector setting (e.g. 20mA) to across terminals 4-5.
4. Make calibration using Pr. 905.

Note: The frequencies set in Pr. 904 and Pr. 905 should be the same as set in Pr. 902 and Pr. 903. The results of the above calibration are as shown below:

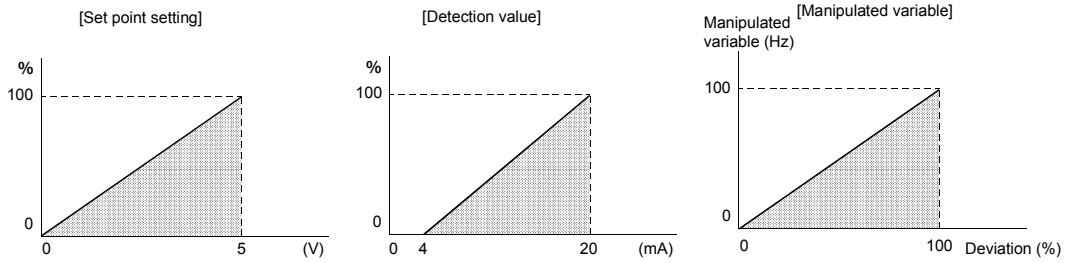

Note:
1. If the multi-speed (RH, RM, RL) signal or jog operation (jog) signal is entered with the X14 signal on, PID control is stopped and multi-speed or jog operation is started.
2. When "20" or "21" is set in Pr. 128, note that the input across inverter terminals 1-5 is added to the set point across terminals 2-5.
3. When "5" (programmed operation mode) is selected for Pr. 79, PID control operation cannot be performed. In this setting, programmed operation is performed.
4. When "6" (switch-over mode) is selected for Pr. 79, PID is made invalid.
5. When "9999" is set in Pr. 22, the stall prevention level is the value entered from terminal 1. When using terminal 1 as the edit input terminal for PID, therefore, set a value other than "9999" in Pr. 22.
6. When "1" (online auto tuning) is selected for Pr. 95, PID control is made invalid.
7. When the terminal functions are changed using Pr. 180 to 186 and/or Pr. 190 to 195, the other functions may be affected. Confirm the functions of the corresponding terminals before making settings.

Pr. 135 "commercial power supply-inverter switch-over sequence output terminal selection"

Pr. 136 "MC switch-over interlock time"

Pr. 137 "start waiting time"

Pr. 138 "commercial power supply-inverter switch-over selection at alarm occurrence"

Pr. 139 "automatic inverter-commercial power supply switch-over frequency"

Related parameters

Pr. 11 "DC dynamic brake operation time"
Pr. 17 "MRS input selection"
Pr. 57 "restart coasting time"
Pr. 58 "restart cushion time"
Pr. 180 to Pr. 186 (input terminal function selection)
Pr. 190 to Pr. 195 (output terminal function selection)

The inverter contains a complicated sequence circuit for commercial power supply-inverter operation switch-over. Hence, the magnetic contactors for switch-over can be interlocked easily by merely entering the start, stop or automatic switch-over select signal.

Parameter Number	Factory Setting	Setting Range	Remarks
135	0	0, 1	
136	0.1 sec.	0 to 100.0 sec.	
137	0.5 sec.	0 to 100.0 sec.	
138	0	0,1	
139	9999	0 to 60.0Hz, 9999	9999: No automatic switch-over

(1) Wiring example

Sink logic, Pr. 185 = 7, Pr. 186 = 6, Pr. 192 = 17, Pr. 193 = 18, Pr. 194 = 19

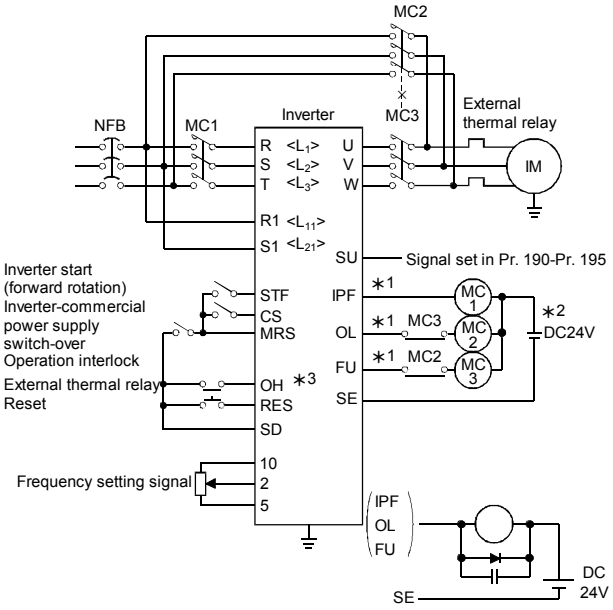

Note: ・This switch-over function is used in the external operation mode. Always connect terminals R1, S1 to a different powersu (power supply different from the one for MC1) to ensure operation.
・MC2 and MC3 must be mechanically interlocked.

*1. Note the sequence output terminal capacities. The terminals used depend on the Pr. 190 to Pr. 194 settings.

Output Terminal Capacity	Permissible Output Terminal Load
Inverter's open collector outputs (IPF, OL, FU)	24VDC 0.1A
FR-A5AR (option output)	230VAC 0.3A 30VDC 0.3A

*2. When connecting an AC power supply, connect the FR-A5AR option and use the contact output.
When connecting a DC power supply, install the following protective diode

*3. The terminals used depend on the Pr. 180 to Pr. 186 settings.

・ Roles of the magnetic contactors (MC1, MC2, MC3)

Magnetic Contactor	Place of Installation	Role
MC1	Between power supply and inverter	Normally shorted with the following exception: Opened only when an inverter fault occurs (shorted again by resetting)
MC2	Between power supply and motor	Shorted for commercial power supply operation, opened for inverter operation Shorted when an inverter fault occurs (selected with parameter, except for external thermal relay operation)
MC3	Between inverter output and motor	Shorted for inverter operation, opened for commercial power supply operation Opened when an inverter fault occurs

<I/O signals>

1) When this function is used (Pr. 135 = "1"), the input signals are switched on-off as indicated below:

Signal	Terminal Used	Function	On-Off	MC Operation (O: ON, ×: OFF)		
				MC1	MC2	MC3
MRS	MRS	Operation enable/disable selection	Commercial power supply-inverter operation enable ····· ON	O	—	—
			Commercial power supply-inverter operation disable ····· OFF	O	×	Unchanged
CS	Depending on Pr. 180 to Pr.186	Inverter-commercial power supply switch-over	Inverter operation ON	O	×	O
			Commercial power supply operation ····· OFF	O	O	×
STF (STR)	STF (STR)	Inverter operation command (invalid for commercial power supply) (Note)	Forward (reverse) rotation ····· ON	O	×	O
			Stop ····· OFF	O	×	O
OH	Depending on Pr. 180 to Pr.186	External thermal relay input	Motor normal···· ON	O	—	—
			Motor fault ····· OFF	×	×	×
RES	RES	Operating condition initialization	Initialization ····· ON	Unchanged	×	Unchanged
			Normal operation OFF	O	—	—

Note: ・ In the above MC Operation field, [-] indicates that MC1 is on, MC2 is off and MC3 is on in inverter operation and MC1 is on, MC2 is off and MC3 is off in commercial power supply operation. [Unchanged] indicates that the status before signal-on or -off is held.

・ The CS signal only functions when the MRS signal is on. STF (STR) only functions when MRS and CS are on.

・ MC1 switches off when an inverter fault occurs.

・ If the MRS signal is not switched on, neither commercial power supply nor inverter operation can be performed.

2) The output signals are output as follows:

Signal	Terminal Used	Description
MC1	Depending on Pr. 190 to Pr. 195	MC1's operation signal is output
MC2		MC2's operation signal is output
MC3		MC3's operation signal is output

(2) Parameter setting

Parameter Number	Name	Setting	Description
135	Commercial power supply-inverter switch-over sequence output terminal selection	0	Sequence output is not provided. (Pr. 136, 137, 138 and 139 settings are ignored.)
		1	Sequence output is provided. When MC1 to MC3 are assigned with Pr. 190 to Pr. 195 (output terminal function selection), open collector outputs are provided. When they are not assigned, relay outputs are provided from the FR-A5AR (option).
136	MC switch-over interlock time	0 to 100.0 sec	Sets the MC2 and MC3 operation interlock time.
137	Start waiting time	0 to 100.0 sec	Set a slightly longer (about 0.3 to 0.5 sec.) value than the time from when the ON signal enters inverter operation MC3 to when it actually switches on.
138	Commercial power supply-inverter switch-over selection at alarm occurrence	0	Stops inverter operation and coasts the motor. The inverter stops when an inverter fault occurs (both MC2 and MC3 switch off).
		1	Stops inverter operation and automatically switches inverter operation to commercial power supply operation. When an inverter fault occurs, inverter operation is automatically switched to commercial power supply operation (MC2: ON, MC3: OFF).
139	Automatic inverter-commercial power supply switch-over frequency	0 to 60.0Hz	The motor is started and run by the inverter up to the set frequency, and when the output frequency reaches or exceeds the set frequency, inverter operation is automatically switched to commercial power supply operation. Start and stop are controlled by the inverter operation command (STF or STR).
		9999	Automatic switch-over is not done.

Note: 1. Pr. 139 functions when Pr. 135 setting is other than "0".

2. When the motor started by the inverter reaches the automatic switch-over frequency, inverter operation is switched to commercial power supply operation. If the inverter's run command value is then lowered to or below the switch-over frequency, commercial power supply operation is not automatically switched to inverter operation.
Switch off the inverter operation command signal (STF or STR) to switch commercial power supply operation to inverter operation and decelerate the motor to a stop.

<Operation sequence>

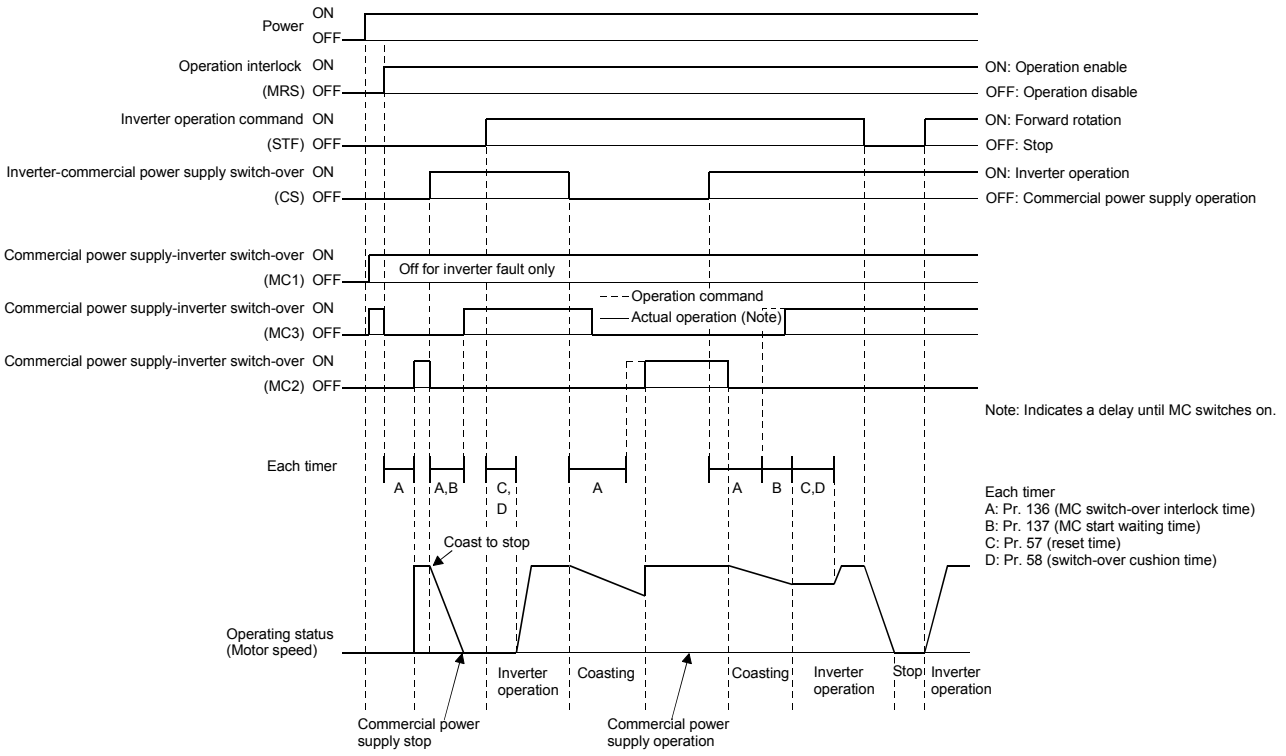

(3) Operation procedure

1) Operation procedure for running
Operation pattern

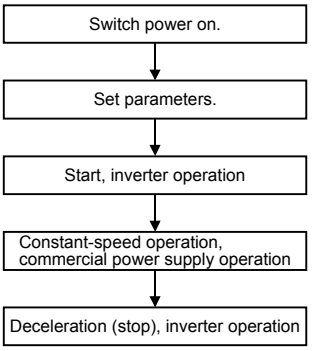

・Pr. 135 = "1" (inverter's open collector output terminals)
・Pr. 136 = "2.0 sec"
・Pr. 137 = "1.0 sec" (Set the value equal to or longer than the time from when MC3 switches on actually until the inverter and motor are connected. If it is shorter, restart may not function properly.
・Pr. 57 = "0.5 sec"
・Pr. 58 = "0.5 sec" (Always set this parameter when commercial power supply operation is switched to inverter operation.)

2) Signal on-off after parameter setting

	MRS	CS	STF	MC1	MC2	MC3	Remarks
Power on	OFF (OFF)	OFF (OFF)	OFF (OFF)	OFF→ON (OFF→ON)	OFF (OFF)	OFF→ON (OFF→ON)	External operation mode (PU operation mode)
At start (Inverter)	OFF→ON	OFF→ON	OFF→ON	ON	OFF	ON	
Constant speed (Commercial power supply)	ON	ON→OFF	ON	ON	OFF→ON	ON→OFF	After MC3 switches off, MC2 switches on. (Motor coasts during this period.) Waiting time 2 sec.
Switched to inverter operation for deceleration (Inverter)	ON	OFF→ON	ON	ON	ON→OFF	OFF→ON	After MC2 switches off, MC3 switches on. (Motor coasts during this period.) Waiting time 4 sec.
Stop	ON	ON	ON→OFF	ON	OFF	ON	

Note:
1. This function is only activated when R1 and S1 are connected to a different power supply (power supply which is not connected to MC1).
2. This function is only valid in the external operation or PU (speed command) + external (run command) operation mode when the Pr. 135 value is other than "0". When the Pr. 135 value is other than "0" in the operation mode other than the above, MC1 and MC3 switch on.
3. MC3 is on when the MRS and CS signals are on and STR is off, but when the motor run by the commercial power supply was coasted to a stop at the last time, it restarts after the time set in Pr. 137 has elapsed.
4. Inverter operation is enabled when the MRS, STF and CS signals switch on. In other cases (MRS is on), commercial power supply operation is performed.
5. When the CS signal is switched off, the motor is switched over to commercial power supply operation. Note that when the STF (STR) signal is switched off, the motor is decelerated to a stop by the inverter.
6. When both MC2 and MC3 are off and MC2 or MC3 is then switched on, the motor restarts after the waiting time set in Pr. 136 has elapsed.
7. If the Pr. 135 setting is other than 0, the Pr. 136 and Pr. 137 settings are ignored in the PU operation mode.
   Also, the inverter's input terminals (STF, CS, MRS, OH) return to their ordinary functions.
8. When the commercial power supply-inverter switch-over sequence is selected, the PU operation interlock function (Pr. 79 = 7) is not activated if it has been set.
9. When the terminal functions are changed using Pr. 180 to 186 and/or Pr. 190 to 195, the other functions may be affected. Confirm the functions of the corresponding terminals before making settings.

Pr. 140 to Pr. 143 ⇒ Refer to Pr. 29.

Pr. 144 ⇒ Refer to Pr. 37.

Pr. 148, Pr. 149 ⇒ Refer to Pr. 22.

Pr. 150 "output current detection level"

Pr. 151 "output current detection time"

Related parameters

Pr. 190 to Pr. 195
(output terminal function selection)

- If the output current remains higher than the Pr. 150 setting during inverter operation for longer than the time set in Pr. 151, the output current detection signal (Y12) is output from the inverter's open collector output terminal.
  (Use any of Pr. 190 to Pr. 195 to assign the terminal used for Y12 signal output.)

Parameter Number	Factory Setting	Setting Range
150	150%	0 to 200.0%
151	0	0 to 10 sec

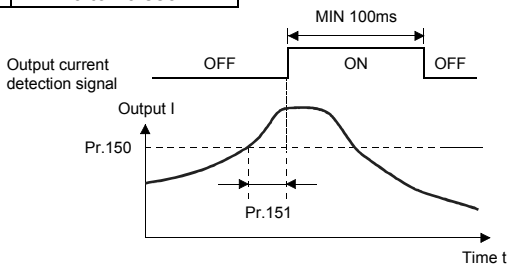

<Setting>

Refer to the following list and set the parameters:

Parameter Number	Description
150	Set the output current detection level. 100% is the rated inverter current.
151	Set the output current detection time. Set a period of time from when the output current rises to or above the Pr. 150 setting to when the output current detection signal (Y12) is output.

Note: 1. Once switched on, the output current detection signal is held on for at least 100ms.
2. This function is also valid during execution of the online or offline auto tuning.
3. When the terminal functions are changed using Pr. 190 to 195, the other functions may be affected. Confirm the functions of the corresponding terminals before making settings.

Pr. 152 "zero current detection level"

Pr. 153 "zero current detection time"

Related parameters

Pr. 190 to Pr. 195
(output terminal function selection)

When the inverter's output current falls to "0", torque will not be generated. This may cause a gravity drop when the inverter is used in vertical lift application.
To prevent this, the output current "zero" signal can be output from the inverter to close the mechanical brake when the output current has fallen to "zero".

- If the output current remains lower than the Pr. 152 setting during inverter operation for longer than the time set in Pr. 153, the zero current detection (Y13) signal is output from the inverter's open collector output terminal.
  (Use any of Pr. 190 to Pr. 195 to assign the terminal used for Y13 signal output.)

Parameter Number	Factory Setting	Setting Range
152	5.0%	0 to 200.0%
153	0.5 sec	0 to 1 sec

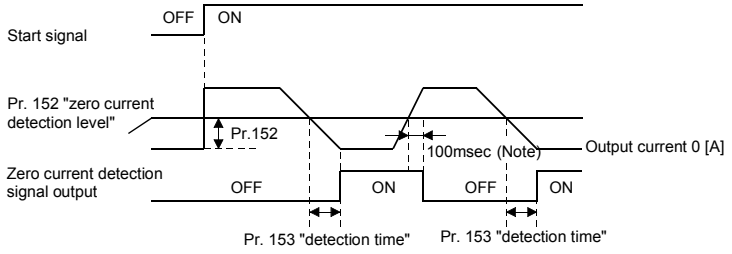

<Setting>

Refer to the following list and set the parameters:

Parameter Number	Description
152	Set the zero current detection level. Set this parameter to define the percentage of the rated current at which the zero current will be detected.
153	Set the zero current detection time. Set a period of time from when the output current drops to or below the Pr. 152 setting to when the zero current detection signal (Y13) is output.

Note: 1. If the current falls below the preset detection level but the timing condition is not satisfied, the zero current detection signal is held on for about 100ms.
2. This function is also valid during execution of the online or offline auto tuning.
3. When the terminal functions are changed using Pr. 190 to 195, the other functions may be affected. Confirm the functions of the corresponding terminals before making settings.

⚠ CAUTION

⚠ The zero current detection level setting should not be too high, and the zero current detection time setting not be too long. Otherwise, the detection signal may not be output when torque is not generated at a low output current.

⚠ To prevent the machine and equipment from resulting in hazardous conditions by use of the zero current detection signal, install a safety backup such as an emergency brake.

Pr. 154 ⇒ Refer to Pr. 22.

Pr. 155 "RT signal activated condition selection"

Pr. 155 "RT signal activated condition selection"

Related parameters

Pr. 14 "load pattern selection"
Pr. 44 to Pr. 49
(second function selection)
Pr. 81 "number of motor poles"
Pr. 180 to r. 186
(input terminal function selection)

- Set the condition of activating the RT terminal to select the second control functions by switching on-off the RT signal.

Parameter Number	Factory Setting	Setting Range
155	0	0, 10

<Setting>

Refer to the following table and set the parameter:

Pr. 155 Setting	Description
0	Made valid immediately by switching the RT signal on-off.
10	Made valid only when the RT signal is on at constant speed. (Invalid during acceleration/deceleration)

Pr. 156 "stall prevention operation selection"

Related parameters

Pr. 22 "stall prevention operation level"
Pr. 23 "stall prevention operation level at double speed"
Pr. 47 "second stall prevention operation current"
Pr. 48 "second stall prevention operation frequency"
Pr. 114 "third stall prevention operation current"
Pr. 115 "third stall prevention operation frequency"
Pr. 154 "voltage reduction selection during stall prevention operation"
Pr. 157 "OL signal output waiting time"

Stall prevention and fast-response current limit can be disabled and the OL signal output delayed.

Parameter Number	Factory Setting	Setting Range
156	0	0 to 31, 100

<Setting>

Refer to the following table and set the parameter as required:

Pr. 156 Setting		Fast-Response Current Limit ○...Activated ●...Not activated	Stall Prevention ○...Activated ●...Not activated			OL Signal Output ○...Operation continued ●...Operation not continued (Note 1)
			Acceleration	Constant speed	Deceleration	
0		○	○	○	○	○
1		●	○	○	○	○
2		○	●	○	○	○
3		●	●	○	○	○
4		○	○	●	○	○
5		●	○	●	○	○
6		○	●	●	○	○
7		●	●	●	○	○
8		○	○	○	●	○
9		●	○	○	●	○
10		○	●	○	●	○
11		●	●	○	●	○
12		○	○	●	●	○
13		●	○	●	●	○
14		○	●	●	●	○
15		●	●	●	●	○
16		○	○	○	○	●
17		●	○	○	○	●
18		○	●	○	○	●
19		●	●	○	○	●
20		○	○	●	○	●
21		●	○	●	○	●
22		○	●	●	○	●
23		●	●	●	○	●
24		○	○	○	●	●
25		●	○	○	●	●
26		○	●	○	●	●
27		●	●	○	●	●
28		○	○	●	●	●
29		●	○	●	●	●
30		○	●	●	●	●
31		●	●	●	●	●
100	Driving	○	○	○	○	○
	Regenerative	●	●	●	●	○
101	Driving	●	○	○	○	○
	Regenerative	●	●	●	●	○

Note 1: When "Operation not continued for OL signal output" is selected, the "E.OLT" alarm code (stopped by stall prevention) is displayed and operation stopped.
(Alarm stop display "E.OLT")

2: If the load is heavy, the lift is predetermined, or the acceleration/deceleration time is short, the stall prevention may be activated and the motor not stopped in the preset acceleration/deceleration time. Therefore, set optimum values to the Pr. 156 stall prevention operation level.
(When the output voltage reduces during stall prevention operation, an overcurrent trip will be less liable to occur but the torque decreases. Set "0" in Pr. 154 when the torque may be reduced.)

3. Even if the high response current limit is selected, the overload alarm could occur if the motor shaft's GD2 is extremely large.

⚠ CAUTION

⚠ **Always perform test operation.**
Stall prevention operation performed during acceleration may increase the acceleration time.
Stall prevention operation performed during constant speed may cause sudden speed changes.
Stall prevention operation performed during deceleration may increase the deceleration time, increasing the deceleration distance.

Pr. 157 "OL signal output waiting time"

Related parameters

Pr. 190 "RUN terminal function selection"
Pr. 191 "SU terminal function selection"
Pr. 192 "IPF terminal function selection"
Pr. 193 "OL terminal function selection"
Pr. 194 "FU terminal function selection"
Pr. 195 "ABC terminal function selection"

Use this parameter to set whether the overload alarm signal (OL signal) is output immediately or a preset period of time after occurrence of an overload status.

Parameter Number	Factory Setting	Setting Range	Remarks
157	0	0 to 25 sec, 9999	9999: No signal output

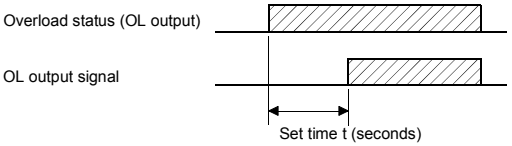

<Setting>

Refer to the following table and set the parameter:

Pr. 157 Setting	Description
0	Output immediately.
0.1 to 25	Output after the set time t (seconds) have elapsed.
9999	Overload alarm signal is not output.

Pr. 158 ⇒ Refer to Pr. 54.

Pr. 160 "user group read selection"

Pr. 173 "user group 1 registration"

Pr. 174 "user group 1 deletion"

Pr. 175 "user group 2 registration"

Pr. 176 "user group 2 deletion"

From among all parameters, a total of 32 parameters can be registered to two different user groups.
The registered parameters may only be accessed for reading and writing.
Other parameters than those registered to the user groups cannot be read.

Parameter Number	Factory Setting	Setting Range	Remarks
160	00	0, 1, 10, 11	
173	0	0 to 999	
174	0	0 to 999, 9999	9999: Batch deletion
175	0	0 to 999	
176	0	0 to 999, 9999	9999: Batch deletion

<Examples of use>

(1) Parameter registration to user group (When registering Pr. 3 to user group 1)

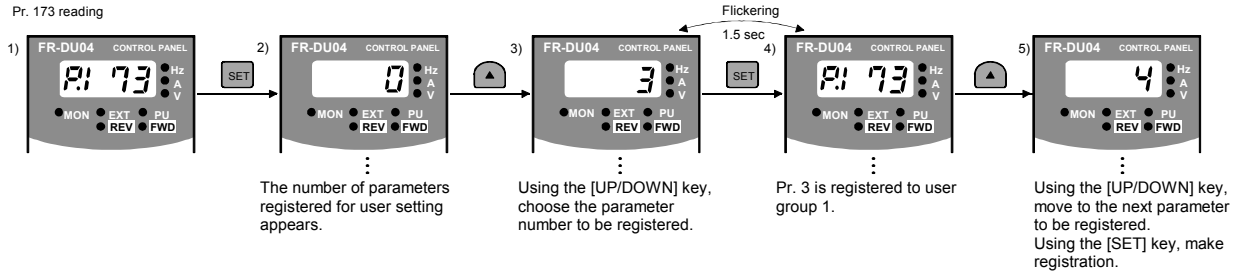

(2) Parameter deletion from user group (When deleting Pr. 5 from user group 1)

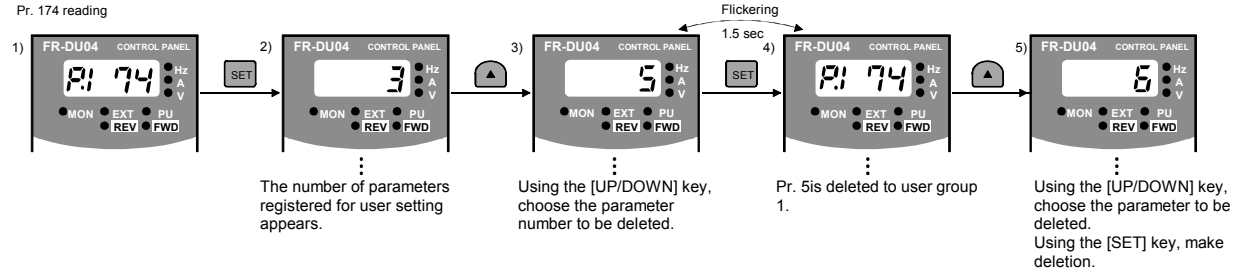

(3) By setting the required value in Pr. 160, make the user groups valid or invalid.

Pr. 160 Setting	Description
0	All parameters can be accessed for reading and writing (Factory setting)
1	Parameters registered to user group 1 may only be accessed for reading and writing.
10	Parameters registered to user group 2 may only be accessed for reading and writing.
11	Parameters registered to user group 1 and 2 may only be accessed for reading and writing.

Note:
1. Pr. 77, Pr. 160 and Pr. 991 values can always be read independently of the user group setting.
2. The Pr. 173 or Pr. 174 is read, the number of parameters registered to user group 1 appears. When Pr. 175 or Pr. 176 is read , the number of parameters registered to user group 2 appears.
3. "0" set in the second digit of the 2-digit Pr. 160 setting is not displayed. However, it is displayed when "0" is set in the first digit only.
4. When "9999" is set in Pr. 174 or Pr. 176, the parameters registered to the corresponding user group is batch-deleted.

Pr. 162 to Pr. 165 ⇒ Refer to Pr. 57.

Pr. 170 "watt-hour meter clear"

Pr. 171 "actual operation hour meter clear"

Related parameter

Pr. 52 "DU/PU main display data selection"

You can clear the watt-hour value and actual operation hour monitoring function.

Parameter Number	Factory Setting	Setting Range
170	0	0
171	0	0

<Setting>

Write "0" in the parameters to clear the watt-hour value and actual operation hour.

Pr. 173 to Pr. 176 → Refer to Pr. 160.

Pr. 180 "RL terminal function selection"

Pr. 181 "RM terminal function selection"

Pr. 182 "RH terminal function selection"

Pr. 183 "RT terminal function selection"

Pr. 184 "AU terminal function selection"

Pr. 185 "JOG terminal function selection"

Pr. 186 "CS terminal function selection"

Use these parameters to select/change the input terminal functions.

Parameter Number	Terminal Symbol	Factory Setting	Factory-Set Terminal Function	Setting Range
180	RL	0	Low-speed operation command (RL)	0 to 99, 9999
181	RM	1	Middle-speed operation command (RM)	0 to 99, 9999
182	RH	2	High-speed operation command (RH)	0 to 99, 9999
183	RT	3	Second function selection (RT)	0 to 99, 9999
184	AU	4	Current input selection (AU)	0 to 99, 9999
185	JOG	5	Jog operation selection (JOG)	0 to 99, 9999
186	CS	6	Automatic restart after instantaneous power failure selection (CS)	0 to 99, 9999

<Setting>

Refer to the following list and set the parameters:

Setting	Terminal Name	Functions			
		Pr.59 = 0	Pr.59 = 1, 2 *	Pr.79 = 5 *	Pr.270 = 1, 3 *
0	RL	Low-speed operation command	Remote setting (acceleration)	Programmed operation group selection	Stop-on-contact selection 0
1	RM	Middle-speed operation command	Remote setting (deceleration)	Programmed operation group selection	
2	RH	High-speed operation command	Remote setting (setting clear)	Programmed operation group selection	
3	RT	Second function selection			Stop-on-contact selection 1
4	AU	Current input selection			
5	JOG	Jog operation selection			
6	CS	Automatic restart after instantaneous power failure selection			
7	OH	External thermal relay input			
8	REX	15-speed selection (combination with RL, RM, RH)			
9	X9	Third function			
10	X10	MT-HC connection (inverter operation enable)			
11	X11	MT-HC connection (instantaneous power failure detection)			
12	X12	PU operation external interlock			
13	X13	External DC dynamic braking start			
14	X14	PID control valid terminal			
15	BRI	Brake opening completion signal			
16	X16	PU-external operation switch-over			
17	X17	Load pattern selection forward/reverse rotation boost			
18	X18	Advanced magnetic flux vector-V/F switch-over			
19	X19	Load torque high-speed frequency			
9999		No function			

* When Pr. 59 = "1 or 2", Pr. 79 = "5", and Pr. 270 = "1 or 3", the functions of the RL, RM, RH and RT signals change as listed above.

Note:
1. One function can be assigned to two or more terminals. In this case, the terminal inputs are ORed.
2. The speed command priorities are higher in order of jog, multi-speed setting (RH, RM, RL) and AU.
3. When HC connection (inverter operation enable signal) is not selected, the MRS terminal shares this function.
4. When advanced magnetic flux vector-V/F switch-over and load pattern selection forward/reverse rotation boost are not selected, the second functions (RT) share these functions.
5. Use common terminals to assign programmed operation group selection, multi-speeds (7 speeds) and remote setting. They cannot be set individually.
   (Common terminals are used since these functions are designed for speed setting and need not be set at the same time.)
6. Stop-on-contact control selection, Pr. 270 = "1 or 3", shares RT with multi-speed setting (low speed), and its allocation cannot be changed.
7. When MT-HC connection inverter operation enable (X10) signal is not assigned, the MRS terminal shares this function.
8. When "7" is set in Pr. 79 and the PU operation external interlock (X12) signal is not assigned, the MRS signal acts as this function.
9. When the load pattern selection forward/reverse rotation boost (X17) signal is not assigned, the RT signal shares this function.
10. When advanced magnetic flux vector-V/F switch-over (X18) signal is not assigned, the RT signal shares this function.

Pr. 190 "RUN terminal function selection"

Pr. 191 "SU terminal function selection"

Pr. 192 "IPF terminal function selection"

Pr. 193 "OL terminal function selection"

Pr. 194 "FU terminal function selection"

Pr. 195 "ABC terminal function selection"

Related parameter

Pr. 76 "operation mode selection"

You can change the functions of the open collector and contact output terminals.

Parameter Number	Terminal Symbol	Factory Setting	Factory-Set Terminal Function	Setting Range
190	RUN	0	Inverter running	0 to 199, 9999
191	SU	1	Up to frequency	0 to 199, 9999
192	IPF	2	Instantaneous power failure/undervoltage	0 to 199, 9999
193	OL	3	Overload alarm	0 to 199, 9999
194	FU	4	Frequency detection	0 to 199, 9999
195	A, B, C	99	Alarm output	0 to 199, 9999

<Setting>

Refer to the following table and set the parameters:

Setting		Signal Name	Function	Operation	Related parameter
Positive logic	Negative logic				
0	100	RUN	Inverter running	Output during operation when the inverter output frequency rises to or above the starting frequency.	——
1	101	SU	Up to frequency	Refer to Pr. 41 "up-to-frequency sensitivity". (Note 2)	Pr. 41
2	102	IPF	Instantaneous power failure or undervoltage	Output when an instantaneous power failure or undervoltage occurs.	——
3	103	OL	Overload alarm	Output while stall prevention function is activated.	Pr. 22, 23, 66, 148, 149, 154
4	104	FU	Output frequency detection	Refer to Pr. 42, Pr. 43 (output frequency detection).	Pr. 42, 43
5	105	FU2	Second output frequency detection	Refer to Pr. 50 (second output frequency detection).	Pr. 50
6	106	FU3	Third output frequency detection	Refer to Pr. 116 (third output frequency detection).	Pr. 116
7	107	RBP	Regenerative brake pre-alarm	Output when 85% of the regenerative brake duty set in Pr. 70 is reached.	Pr. 70
8	108	THP	Electronic overcurrent protection pre-alarm	Output when the cumulative electronic overcurrent protection value reaches 85% of the preset level.	Pr. 9
9	109	PRG	Programmed mode	Output in the programmed mode. (Note 3)	Pr. 79, 200 to 231
10	110	PU	PU operation mode	Output when the PU operation mode is selected.	Pr. 17 = 0 to 3
11	111	RY	Inverter operation ready	Output when the inverter can be started by switching the start signal on or while it is running.	——
12	112	Y12	Output current detection	Refer to Pr. 150 and 151 (output current detection).	Pr. 150, 151
13	113	Y13	Zero current detection	Refer to Pr. 152 and 153 (zero current detection).	Pr. 152, 153
14	114	FDN	PID lower limit	Refer to Pr. 128 to 134 (PID control).	Pr. 128 to 134
15	115	FUP	PID upper limit		
16	116	RL	PID forward-reverse rotation output		

Setting		Signal Name	Function	Operation	Related parameter
Positive logic	Negative logic				
17	——	MC1	Commercial power supply-inverter switch-over MC1	Refer to Pr. 135 to 139 (commercial power supply-inverter switch-over).	Pr. 135 to 139
18	——	MC2	Commercial power supply-inverter switch-over MC2		
19	——	MC3	Commercial power supply-inverter switch-over MC3		
20	120	BOF	Brake opening request	Refer to Pr. 278 to 285 (brake sequence functions).	Pr. 278 to 285
26	126	FIN	Fin overheat pre-alarm	Output when the heat sink temperature reaches about 85% of the fin overheat protection temperature.	——
27	127	ORA	In-position	When orientation is valid (only when FR-A5AP option is loaded)	——
28	128	ORM	Orientation error		
29	129	Y29	Overspeed detection	For PLG feedback control, vector control (only when the FR-A5AP option is loaded)	
30	130	Y30	Forward running output		
31	131	Y31	Reverse running output		
32	132	Y32	Regeneration status output	For vector control (only when the FR-A5AP option is loaded)	
33	133	RY2	Operation ready 2		
98	198	LF	Minor fault output	Communication error for RS485 (PU or computer link option)	——
99	199	ABC	Alarm output	Output when the inverter's protective function is activated to stop the output (major fault).	——
9999		——	No function	——	——

0 to 99: Positive logic
100 to 199: Negative logic

Note: 1. Under PLG feedback control (when the FR-A5AP option is loaded), the operations of the up-to-frequency SU and frequency detection FU, FU2, FU3 are as follows:
SU, FU: The actual speed (frequency) provided by the PLG feedback signal is output at or above the frequency specified for detection.
FU2, FU3: The inverter output frequency is output at or above the frequency specified for detection.
2. When the frequency setting is varied with the analog signal or the [UP/DOWN] key of the operation panel, note that the output of the SU (up-to-frequency) signal may alternate between ON and OFF due to that varying speed and the timing of the varying speed dependent on the acceleration/deceleration time setting.
3. This signal is output when "5" is set in Pr. 79 "operation mode selection" and the external operation mode is selected (the inverter goes into the programmed mode).
4. The same function may be set to more than one terminal.
5. When the function is activated, the terminal conducts with the settings of 0 to 99 and does not conduct with the settings of 100 to 199.
6. Pr. 190 to Pr. 195 do not function if the values set are other than the above.
7. When Pr. 76 = 1 or 3, the output signals of the SU, IPF, OL and FU output terminals conform to Pr. 76. When an inverter alarm occurs, the signal outputs are switched over to alarm code outputs.
8. The output assignment of the RUN terminal and alarm output relay conforms to the above setting independently of Pr. 76.

Pr. 199 "user's initial value setting"

Related parameter

Pr. 77 "parameter write disable selection"

Among the parameters, you can set user-only parameter initial values. These values may be set to 16 parameters.
By performing user clear operation from the operation panel or parameter unit, you can initialize the parameters to the user-set initial values. Note that the parameters of which initial values have not been set are initialized to the factory settings by user clear operation.

- You can read the user's initial value list in the help mode of the parameter unit (FR-PU04).

Parameter Number	Factory Setting	Setting Range
199	0	0 to 999, 9999

The read Pr. 199 value is displayed as the number of parameters registered.

<Setting example>

(1) To set "1" in Pr. 7 and "2" in Pr. 8 as user's initial values. (Operation from the FR-DU04)

1) Set "1" (target initial value) in Pr. 7.
↓
2) Set "2" (target initial value) in Pr. 8.
↓
3) Press the [SET] key to read Pr. 199. The number of parameters having user's initial values are then displayed.
↓
4) Further press the [SET] key for 1.5 seconds. The parameter setting screen is then displayed.
↓
5) Select Pr. 7 and Pr. 8 with the [UP/DOWN] key and press the [SET] key for 1.5 seconds to enter.
↓
6) Through the above steps, the initial values of Pr. 7 and Pr. 8 are registered.

The settings of the parameters whose numbers are set in Pr. 199 (i.e. Pr. 7 = 1, Pr. 8 = 2 in the above example) are user's initial values.

(2) Deletion of user's initial values

By writing "9999" to Pr. 199 (and pressing the [SET] key for 1.5 seconds), the user's initial values registered are batch-deleted.

Note:
1. When user's initial values for Pr. 902 to Pr. 905 are set, one parameter uses the area of two parameters for registration.
2. As this setting is concerned with user-cleared initial values, the parameter numbers which cannot be cleared cannot be set.
3. The operation panel (FR-DU04) cannot be used to refer to user's initial values.
4. Values cannot be registered to Pr. 201 to Pr. 231.

Pr. 200 "program minute/second selection"

Pr. 201 to Pr. 210 "program setting 1 to 10"

Pr. 211 to Pr. 220 "program setting 11 to 20"

Pr. 221 to Pr. 230 "program setting 21 to 30"

Pr. 231 "time-of-day setting"

Related parameters

Pr. 76 "alarm code output selection"
Pr. 79 "operation mode selection"

In programmed operation, automatic operation is performed under the control of the internal timer in accordance with the preset time of day, running frequency and rotation direction.

- This function is made valid when the following parameter is set to the following value:
  - Pr. 79 = "5" (programmed operation)
- You can select the time unit for programmed operation between "minute/second" and "hour/minute".
- The start time of day, rotation direction and running frequency are defined as one point and every 10 points are grouped into three:
  - Group 1: Pr. 201 to Pr. 210
  - Group 2: Pr. 211 to Pr. 220
  - Group 3: Pr. 221 to Pr. 230
- Use Pr. 231 to set the time of day when programmed operation is started.

Parameter Number	Factory Setting	Setting Range	Remarks
200	0	0 to 3	0, 2 [minute/second] 1, 3 [hour/minute]
201 to 210	0,9999,0	0 to 2, 0 to 400, 9999, 0 to 99.59	0 t 2: Rotation direction 0 to 400, 9999: Frequency 0 to 99.59: Time
211 to 220	0,9999,0	0 to 2 0 to 400, 9999 0 to 99.59	0 t 2: Rotation direction 0 to 400, 9999: Frequency 0 to 99.59: Time
221 to 230	0,9999,0	0 t 2: Rotation direction 0 to 400, 9999: Frequency 0 to 99.59: Time	0 t 2: Rotation direction 0 to 400, 9999: Frequency 0 to 99.59: Time
231	0	0 to 99.59	

<Wiring example>

- For sink logic

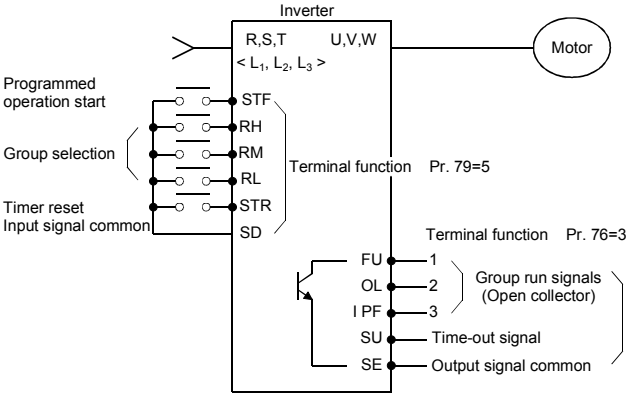

<Setting>

(1) Set the time unit for programmed operation in Pr. 200. Select either of "minute/second" and "hour/minute".

Setting	Description
0	Minute/second unit (voltage monitor)
1	Hour/minute unit (voltage monitor)
2	Minute/second unit (reference time of day monitor)
3	Hour/minute unit (reference time of day monitor)

Note: 1. When "2" or "3" is set in Pr. 200, the reference time-of-day monitor screen is displayed instead of the voltage monitor screen.
2. Note that when the Pr. 200 setting is changed, the units for Pr. 201 to Pr. 231 setting will change.

(2) The inverter has an internal timer (RAM). When the reference time of day is set in Pr. 231, programmed operation is started at this time of day.

1) Setting range

The time unit depends on the Pr. 200 setting.

Pr. 200 Setting	Pr. 231 Setting Range	Pr. 200 Setting	Pr. 231 Setting Range
0	Max. 99 minutes 59 seconds	2	Max. 99 minutes 59 seconds
1	Max. 99 hours 59 minutes	3	Max. 99 hours 59 minutes

Note: The reference time-of-day timer returns to "0" when both the start signal and group select signal are entered. Set the reference time of day in Pr. 231 when both signals are on.

2) Resetting the reference time of day

The reference time of day is cleared by switching on the timer reset signal (STR) or by resetting the inverter. Note that the reference time-of-day value set in Pr. 231 is also reset to "0".

(3) Program setting

The rotation direction, running frequency and start time of day are 201 to Pr. 231 are used for this setting.

	Setting Point	Rotation Direction, Frequency, Start Time of Day
Group 1	No.1	Pr.201
	2	Pr.202
	3	Pr.203
	4	Pr.204
	・	・
	・	・
	・	・
	10	Pr.210
Group 2	No.11	Pr.211
	・	・
	・	・
	・	・
	20	Pr.220
Group 3	No.21	Pr.221
	・	・
	・	・
	・	・
	30	Pr.230

Parameter Number	Name	Setting Range	Factory Setting	Remarks
201 to 230	Programmed operation minute/second selection	0 to 2	0	Rotation direction setting 0: Stop, 1: Forward rotation, 2: Reverse rotation
		0 to 400Hz	9999	Frequency setting
		0 to 99:59	0	Time of day setting

<Setting procedure>
(Example: Set point No. 1, forward rotation, 30Hz, 4 hours 30 minutes)

1) Read Pr. 201 value.
2) Enter "1" (forward rotation) in Pr. 201 and press the [SET] key ([WRITE] key when using the FR-PU04 parameter unit).
3) Enter 30 (30Hz) and press the [SET] key ([WRITE] key when using the FR-PU04 parameter unit). (Note 1)
4) Enter "4.30" and press the [SET] key ([WRITE] key when using the FR-PU04 parameter unit). (Note 2)
5) Press the [UP] key to move to the next parameter (Pr. 202), and press the [SET] key ([READ] key when using the FR-PU04 parameter unit) to display the current setting. Hereafter, press the [UP] key to advance the parameter one by one.

Note 1: To make a stop, write "0" in the rotation direction and frequency. Set "9999" for no setting.
Note 2: An error will result if 4.80 is entered (59 minutes or 59 seconds is exceeded).

・ Assuming that operation has been programmed as indicated in the following table, the operation pattern is as shown in the figure below:

No.	Operation	Parameter Setting
1	Forward rotation, 20Hz, 1 hour 0 minutes	Pr. 201 = 1, 20, 1:00
2	Stop, 3 hours 0 minutes	Pr. 202 = 0, 0, 3:00
3	Reverse rotation, 30Hz, 4 hours 0 minutes	Pr. 203 = 2, 30, 4:00
4	Forward rotation, 10Hz, 6 hours 0 minutes	Pr. 204 = 1, 10, 6:00
5	Forward rotation, 35Hz, 7 hours 30 minutes	Pr. 205 = 1, 35, 7:30
6	Stop, 9 hours 0 minutes	Pr. 206 = 0, 0, 9:00

<Operation pattern>

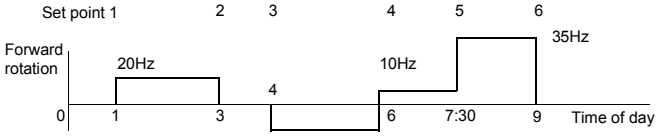

(4) Input signals

Name	Description	Signal Level	Remarks
Group signal RH (group 1) RM (group 2) RL (group 3)	Used to select the group for programmed operation.	Photocoupler isolated	May also be driven by transistor. When ic = 10mA, Vec<0.5V should be satisfied.
Timer reset signal (STR)	Input to zero the reference time of day.		
Programmed operation start signal (STF)	Input to start programmed operation.		

(5) Output signals

Name	Description	Signal Level	Remarks
Time-out signal (SU)	Output on completion of the operation of the selected group and cleared on timer reset.	Open collector output (isolated)	Permissible load 24VDC, 0.1A Only when Pr. 76 = 3
Group select signals (FU, OL, IPF)	Output during running of corresponding group's program and cleared on timer reset.		

(6) Operation

1) Ordinary operation

After completion of all preparations and settings, turn on the desired group select signal (any of RH (group 1), RM (group 2) and RL (group 3)), then turn on the start signal (STF). This causes the internal timer (reference time of day) to be reset automatically and the operation of that group to be performed in sequence in accordance with the settings. When the operation of the group ends, a signal is output from the time-out output terminal. (The open collector signal of SU is turned on.)

Note: Use the programmed operation function with "5" set in Pr. 79. Programmed operation will not be performed if any of the group select signals is switched on during PU operation or data link operation.

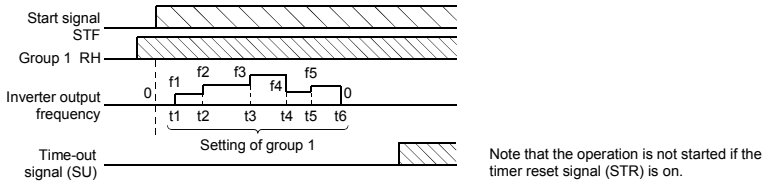

2) Multi-group select operation

When two or more groups are selected at the same time, the operations of the selected groups are executed in sequence of group 1, group 2 and group 3.

For example, if group 1 and group 2 have been selected, the operation of group 1 is first carried out, and after that operation ends, the reference time of day is reset, the operation of group 2 is started, and the time-out signal (SU) is output after the operation of group 2 ends.

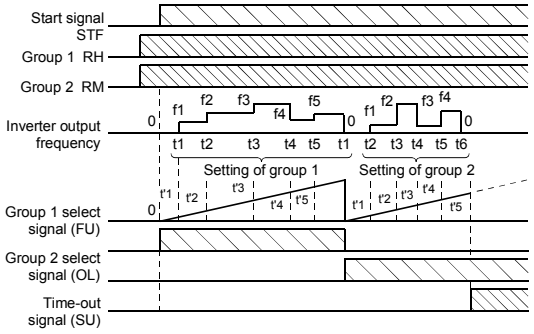

(7) To repeat the operation of the same group, reset the timer using the time-out signal as shown below.

1) To repeat the operation of only group 1	2) To repeat the operation of groups 1 and 2
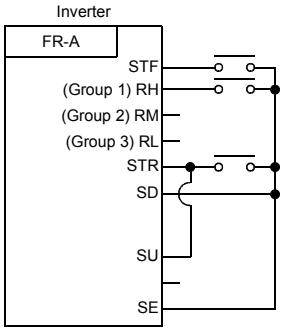	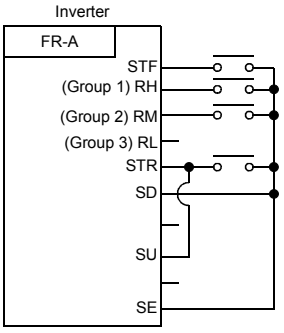

Note: 1. If the inverter power is switched off, then on (including an instantaneous power failure) during the execution of the programmed operation, the internal timer is reset and the inverter does not restart if the power is restored.
To resume the operation, turn the programmed operation start signal (STF) off, then on. (At this time, when it is required to set the reference time of day, switch the start signal on before setting.)

2. When the inverter is wired for programmed operation specifications, the following signals are invalid:AU, STOP, 2, 4, 1, JOG

3. During programmed operation, the inverter cannot be operated in any other mode. When the programmed operation start signal (STF) and timer reset signal (STR) are ON, the operation mode cannot be switched between PU operation and external operation.

Pr. 232 to Pr. 239 ⇒ Refer to Pr. 4.

Pr. 240 ⇒ Refer to Pr. 72.

Pr. 244 "cooling fan operation selection"

You can control the operation of the cooling fan built in the inverter.

Parameter Number	Factory Setting	Setting Range
244	0	0, 1

<Setting>

Setting	Description
0	Operated at power on (independently of whether the inverter is running or at a stop).
1	Cooling fan on-off control valid (The cooling fan is always on while the inverter is running. During a stop, the inverter status is monitored and the fan switches on-off according to temperature.)

Pr. 250 "stop selection"

Related parameters

Pr. 7 "acceleration time"
Pr. 8 "deceleration time"
Pr. 44 "second acceleration/deceleration time"
Pr. 45 "second deceleration time"
Pr. 110 "third acceleration/deceleration time"
Pr. 111 "third deceleration time"

Used to select the stopping method (deceleration to a stop or coasting) when the start signal (STF/STR) switches off.

Parameter Number	Factory Setting	Setting Range
250	9999	0 to 100 sec, 9999

(1) Pr. 250 = "9999"
When the start signal switches off, the motor is decelerated to a stop.

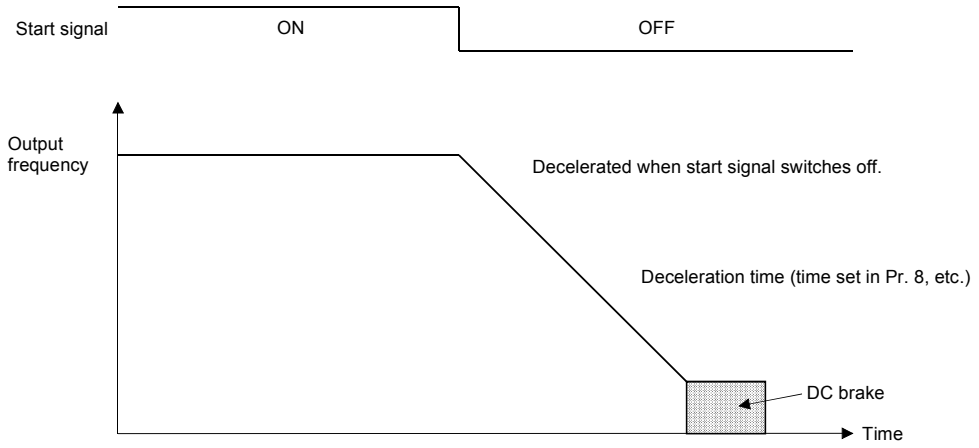

(2) Pr. 250 = other than "9999"
The output is shut off when the time set in Pr. 250 has elapsed after the start signal had switched off. The motor coasts to a stop.

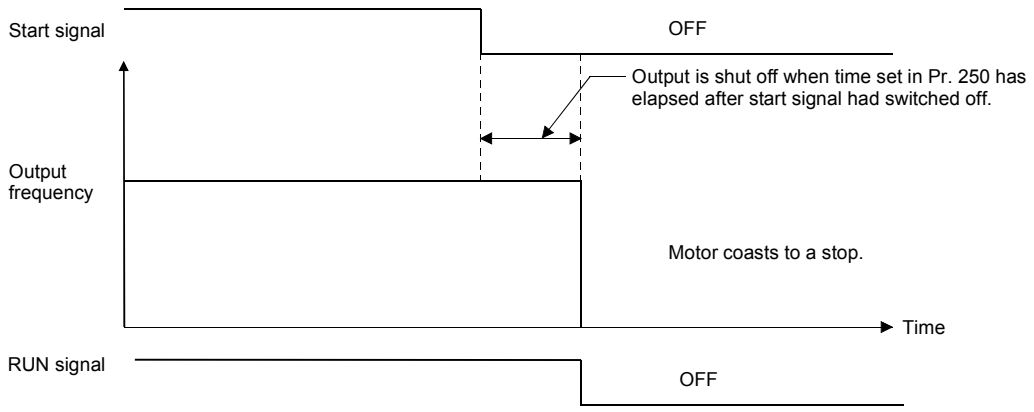

Note: 1. The RUN signal switches off when the output stops.
2. When the start signal is switched on again during motor coasting, the motor starts at 0Hz.

Pr. 251 " Output phase failure protection selection "

You can make invalid the output phase failure protection(E.LF) function which stops the inverter output if one of the three phases(U,V,W) on the inverter's output side (load side) becomes open.

Parameter Number	Factory Setting	Setting Range	Description
251	0, 1	1	0:Without output phase failure protection 1: With output phase failure protection

Pr. 252 "Override bias"

Pr. 253 "Override gain"

The override range of 50%-150% provided when Pr.73 "0-5V, 0-10V selection" which is used to choose the override has been expanded to 0%-200% so that the override value may be, set as desired.

Parameter Number	Factory Setting	Setting Range
252	50%	0 to 200%
253	150%	0 to 200%

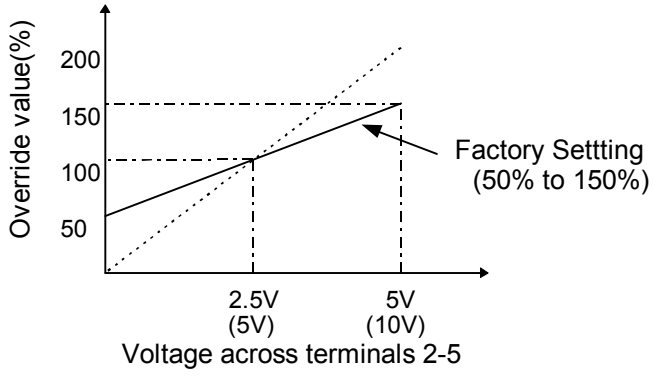

Related parameters

Pr. 12 "DC dynamic brake voltage"
Pr. 20 "acceleration/deceleration reference frequency"

Pr. 261 "power failure stop selection"

Pr. 262 "subtracted frequency at deceleration start"

Pr. 263 "subtraction starting frequency"

Pr. 264 "power-failure deceleration time 1"

Pr. 265 "power-failure deceleration time 2"

Pr. 266 "power-failure deceleration time switch-over frequency"

When an instantaneous power failure or undervoltage occurs, the inverter can be decelerated to a stop.

- Remove the jumper from across terminals (R-R1)<L_1-L_{11}> and (S-S1)<L_2-L_{21}> and connect the control circuit terminals R1-P<L_{11}- +> and S1-N<L_{21}- -> to route the power supply wiring of the other system.

Parameter Number	Factory Setting	Setting Range
261	0	0,1
262	3Hz	0 to 20Hz
263	60Hz<50Hz>	0 to 120Hz, 9999
264	5 sec	0 to 3600/0 to 360 sec
265	9999	0 to 3600/0 to 360 sec, 9999
266	60Hz<50Hz>	0 to 400Hz

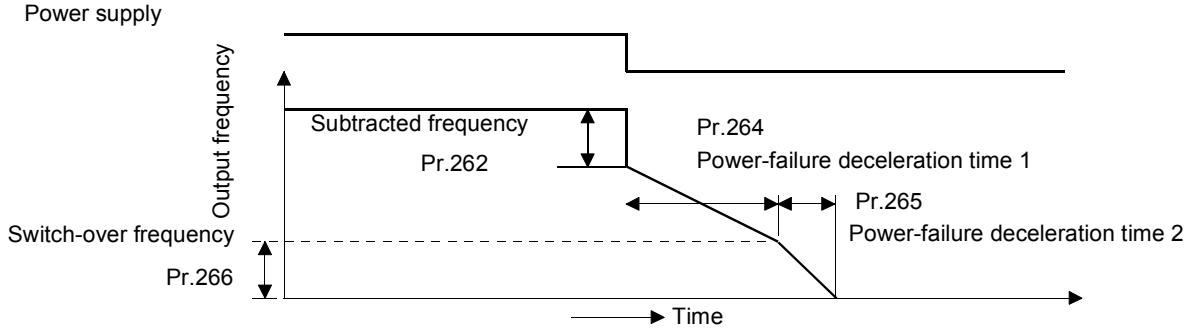

<Setting>

Parameter Number		Setting	Description
261		0	Coasting to stop When undervoltage or power failure occurs, the inverter output is shut off.
		1	When undervoltage or power failure occurs, the inverter is decelerated to a stop.
262		0 to 20Hz	Normally, operation can be performed with the factory setting unchanged. The frequency can be adjusted within the range 0 to 20Hz according to the load specifications (inertia moment, torque).
263		0 to 120Hz	If the output frequency at occurrence of undervoltage or power failure is equal to or greater than the frequency set in Pr. 263, deceleration starts at the value found by subtracting the frequency set in Pr. 262 from the output frequency at that time. If the output frequency at occurrence of undervoltage or power failure is less than the frequency set in Pr. 263, the inverter is decelerated to a stop, starting at the output frequency at that time.
		9999	The inverter is decelerated to a stop, starting at the value found by subtracting the frequency set in Pr. 262 from the output frequency at occurrence of undervoltage or power failure.
264	Pr.21 = 0	0 to 3600 sec	Set a deceleration slope down to the frequency set in Pr. 266. Set the slope in terms of time required for deceleration from the frequency set in Pr. 20 to 0Hz.
	Pr.21 = 1	0 to 360 sec	
265	Pr.21 = 0	0 to 3600 sec	Set a deceleration slope below the frequency set in Pr. 266. Set the slope in terms of time required for deceleration from the frequency set in Pr. 20 to 0Hz.
	Pr.21 = 1	0 to 360 sec	
		9999	Same slope as in Pr. 264
266		0 to 400Hz	Set the frequency at which the deceleration slope is is switched from the Pr. 264 setting to the Pr. 265 setting.

Note: 1. This function is invalid when the automatic restart after instantaneous power failure function is activated.
2. If (output frequency at occurrence of undervoltage or power failure) minus (frequency set in Pr. 263) is negative, the calculation result is regarded as 0Hz.
3. The power failure stop function is not activated during a stop or error.
4. If power is restored during deceleration, the inverter is kept decelerating to a stop.
To restart, switch off the start signal once, then switch it on again.
5. When the high power factor converter is used (Pr. 30=2), this function is made invalid.

⚠ CAUTION

If power-failure deceleration operation is set, some loads may cause the inverter to trip and the motor to coast.
If enough regenerative energy is not given by the motor, the motor will coast.

Pr. 270 "stop-on-contact, load torque high-speed frequency selection"

Related parameters
- Pr. 271 "high-speed setting maximum current"
- Pr. 272 "mid-speed setting minimum current"
- Pr. 273 "current averaging range"
- Pr. 274 "current averaging filter constant"
- Pr. 275 "stop-on-contact exciting current low-speed multiplying factor"
- Pr. 276 "stop-on-contact PWM carrier frequency"

To ensure accurate positioning at the upper limit etc of a lift, stop-on-contact control causes a mechanical brake to be closed while the motor is developing a holding torque to keep the load in contact with a mechanical stopper etc.
This function suppresses vibration which is liable to occur when the load is stopped upon contact in vertical motion applications, ensuring steady precise positioning.

Load torque high-speed frequency control automatically sets the maximum operating frequency according to the load.
Specifically, the weight of the load is determined after a start by the average current at a given time; when the load is light, the preset frequency can be increased for operation.
When the load is light, speed can be automatically increased in a sky parking lot, for example, to reduce incoming and outgoing times.

- Using Pr. 270, select stop-on-contact control and/or high-speed frequency control (control which automatically switches between high- and middle-speed operations according to load torque).
  - ・When stop-on-contact control is selected, select advanced magnetic flux vector control. For function details, refer to Pr. 275 and Pr. 276.
  - ・For function details of load torque high-speed frequency control, refer to Pr. 271 to Pr. 274.

Parameter Number	Factory Setting	Setting Range	Description
270	0	0	Without stop-on-contact control and load torque high-speed frequency control
		1	Stop-on-contact control
		2	Load torque high-speed frequency control
		3	Stop-on-contact control + load torque high-speed frequency control

Pr. 271 "high-speed setting maximum current"

Pr. 272 "mid-speed setting minimum current"

Pr. 273 "current averaging range"

Pr. 274 "current averaging filter constant"

Related parameters

Pr. 4 "multi-seed setting (high speed)"
Pr. 5 "multi-seed setting (middle speed)"
Pr. 6 "multi-seed setting (low speed)"
Pr. 59 "remote setting function selection"
Pr. 180 to Pr. 186
(input terminal function selection)
Pr. 270 "stop-on-contact, load torque high-speed frequency selection"

- Used to set the current, averaging range, etc. required when "2" or "3" is set in Pr. 270 to select load torque high-speed frequency control.

Parameter Number	Factory Setting	Setting Range
271	50%	0 to 200%
272	100%	0 to 200%
273	9999	0 to 400Hz, 9999
274	16	1 to 4000

<Without high-speed frequency control>

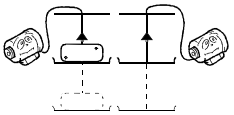

Whether there is a load or not, the lift is moved vertically at the same speed.

<With high-speed frequency control>

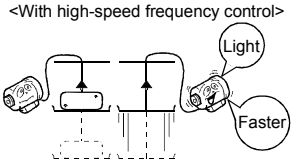

The lift with a light load or without a load is moved faster than the lift with a load.
(The output frequency is increased.)

<Wiring example>

- Sink logic
- Pr.186 = 19

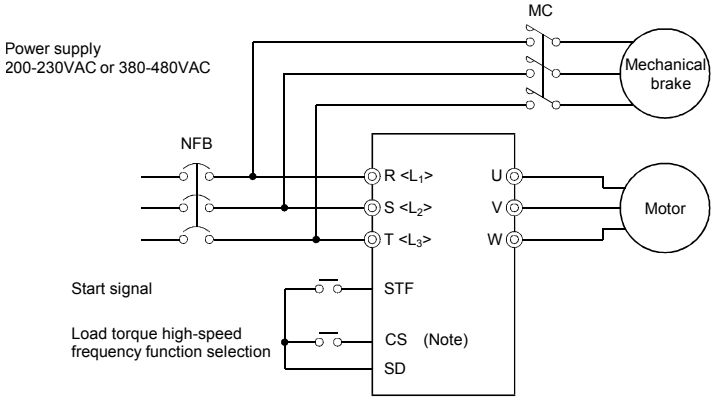

Note: The input signal terminal used depends on the Pr. 180 to Pr. 186 settings.

<Operation example>

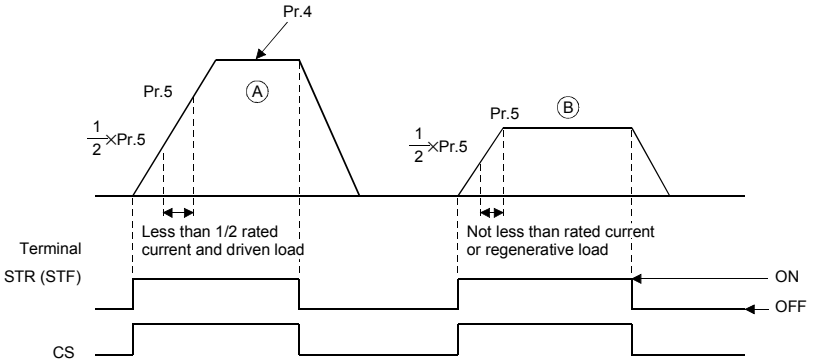

・When operation is performed with X19 (load detection high-speed frequency function selection) signal on, the inverter automatically varies the maximum frequency between Pr. 4 “multi-speed setting (high speed)” and Pr. 5 "multi-speed setting (middle speed)" settings as shown below according to the average current flowing during acceleration from the frequency half of the Pr. 5 setting to the frequency set in Pr. 5.

Example: 1. If the average current is not more than half of the rated inverter current, the maximum frequency is the value set in Pr. 4 as shown in operation example A.
2. If the average current is not less than the rated inverter current, the maximum frequency is the value set in Pr. 5 as shown in operation example B.

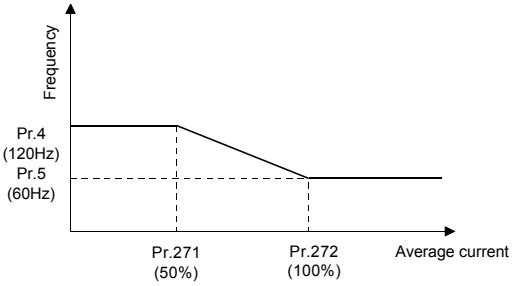

<In this example, the frequency varies according to the current; 30Hz for 100% current and 60Hz for 50% current.>

<Setting>

1) Set "2 or 3" in Pr. 270.
2) Assign X19 (load detection high-speed frequency function selection) to the input terminal using any of Pr. 180 to Pr. 186.
3) Refer to the following table and set the parameters:

Parameter Number	Name	Setting	Description
4	Multi-speed setting (high speed)	0 to 400Hz	Set the higher-speed frequency.
5	Multi-speed setting (middle speed)	0 to 400Hz	Set the lower-speed frequency.
271	High-speed setting maximum current	0 to 200%	Set the upper and lower limits of the current at high and middle speeds.
272	Mid-speed setting minimum current	0 to 200%	
273	Current averaging range	0 to 400Hz	(Average current during acceleration from (Pr. 273 × 1/2) Hz to (Pr. 273) Hz can be achieved.
		9999	Average current during acceleration from (Pr. 5 × 1/2) Hz to (Pr. 5) Hz is achieved.
274	Current averaging filter constant	1 to 4000	Set the time constant of the primary delay filter relative to the output current. (The time constant [ms] is 0.75 × Pr. 274 and the factory setting is 12ms.) A larger setting provides higher stability but poorer response.

Note: 1. This function is only valid in the external operation mode. This function is not activated when "1" or "2" (remote setting function) is selected for Pr. 59.
2. If the current averaging zone includes the low output region, the output current may increase in the constant-output region. When the current is low, the running frequency increases, increasing the deceleration time.
3. The function is valid when the high-speed upper limit frequency is 100Hz or less.
4. The fast-response current limit function and instantaneous low restart function are invalid.
5. Can be activated at every start.
6. When the terminal functions are changed using Pr. 180 to Pr. 186, the other functions may be affected. Confirm the functions of the corresponding terminals before making settings.

⚠ CAUTION

⚠ **When the load is light, the motor may accelerate suddenly up to 120Hz, causing hazardous conditions. Provide sufficient interlocks on the machine side before starting operation.**

- Set frequency reference table for load torque high-speed frequency control
  The following table lists the frequencies set when the load torque high-speed frequency control signal (X19) and multi-speed terminals (RH, RM, RL) are selected together:

Input Signals				Set Frequency	
X19	RH	RM	RL		
○				Conforms to load torque high-speed frequency control.	
	○			Speed 1 (high speed)	Pr.4
		○		Speed 2 (middle speed)	Pr.5
			○	Speed 3 (low speed)	Pr.6
○	○			Speed 1 (high speed)	Pr.4
○		○		Speed 2 (middle speed)	Pr.5
○			○	Speed 3 (low speed)	Pr.6
	○	○		Speed 6	Pr.26
	○		○	Speed 5	Pr.25
		○	○	Speed 4	Pr.24
○	○	○		Speed 6	Pr.26
○		○	○	Speed 4	Pr.24
	○	○	○	Speed 7	Pr.27
○	○		○	Speed 5	Pr.25
○	○	○	○	Speed 7	Pr.27
				Setting using terminal 2, 1, 4, JOG	

○ indicates that the signal is on.

Note: 1. Assumes that the external operation command mode is selected and the remote setting function is not selected.
2. Multi-speeds override the main speeds (across terminals 2-5, 4-5, 1-5).
3. When the 12-bit digital speed input (option FR-A5AX) is selected, the above list is invalid. (The 12-bit digital speed input has the highest priority.)
4. Jog operation overrides the above list.

- Function list (The following specifications apply to the external operation mode.)

Pr. 270 Setting	Load Torque High-Speed Frequency Control	Stop-On-Contact Control	Multi-Speeds (7 speeds)
0	×	×	○
1	×	○	○
2	○	×	○
3	○	○	○

○: Indicates that the function is valid.

- Restrictions when 1 to 3 are selected for Pr. 270
  Under the following conditions, the functions of Pr. 270 settings "1 to 3" are made invalid:
  - PU operation
  - Programmed operation
  - PU + external combined
  - PID control
  - Remote setting function mode
  - Orientation control (option FR-A5AR)
  - Jog operation (common to PU and external operations)

Pr. 275 "stop-on-contact exciting current low-speed multiplying factor"

Pr. 276 "stop-on-contact PWM carrier frequency"

Related parameters

Pr. 4 "multi-seed setting (high speed)"
Pr. 5 "multi-seed setting (middle speed)"
Pr. 6 "multi-seed setting (low speed)"
Pr. 48 "second stall prevention operation current"
Pr. 72 "PWM carrier frequency"
Pr. 180 to Pr. 186 (input terminal function selection)
Pr. 270 "stop-on-contact, load torque high-speed frequency selection"

- Set "1 or 3" (stop-on-contact control) in Pr. 270. Also advanced magnetic flux vector control must be selected.

Parameter Number	Factory Setting	Setting Range
270	0	0, 1, 2, 3,
275	9999	0 to 1000%, 9999
276	9999	0, 1, 2 , 9999

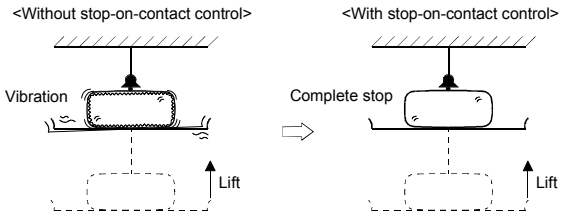

<Wiring and operation examples>

・ Sink logic

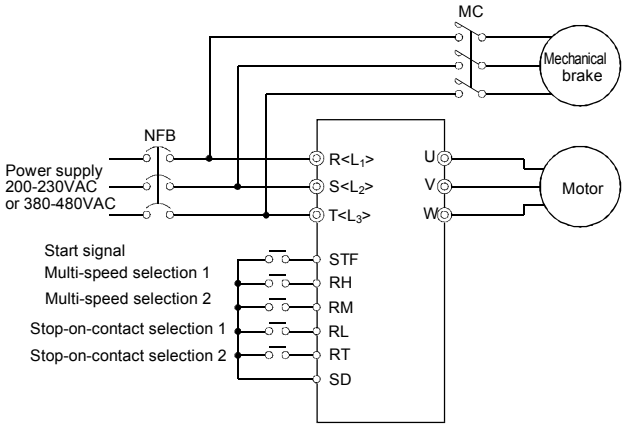

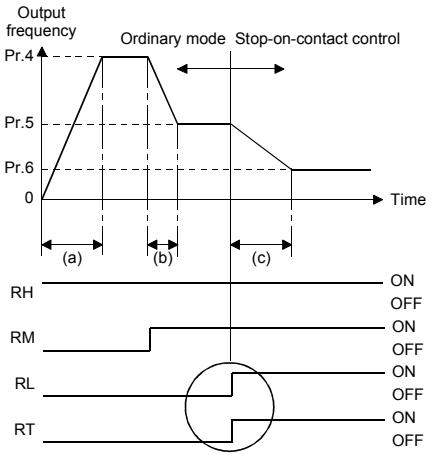

Goes into stop-on-contact control mode when both RL and RT switch on.
Note: (RL and RT may be switched on in any order with any time difference.)

Note: The input signal terminals used depend on the Pr. 180 to Pr. 186 settings.

When both the RT and RL terminals are switched on, the inverter enters the stop-on-contact mode, in which operation is performed at the frequency set in Pr. 6 "multi-speed setting (low speed)" independently of the preceding speed.

Note: 1. By increasing the Pr. 275 setting, the low-speed (stop-on-contact) torque increases, but the overcurrent alarm (E.OCT) may occur or the machine may oscillate in a stop-on-contact state.
2. The stop-on-contact function is different from the servo lock function, and if used to stop or hold a load for an extended period, the function can cause the motor to overheat. After a stop, immediately reset this function and use a mechanical brake to hold the load.
3. Under the following operating conditions, the stop-on-contact function is made invalid:
- PU operation
- Programmed operation
- PU + external operation
- PID control function operation
- Remote setting function operation
- Orientation control function operation
- Jog operation

<Setting>

1) Select advanced magnetic flux vector control and set "1" or "3" in Pr. 270.
2) Refer to the following list and set the parameters:

Parameter Number	Name	Setting	Description
6	Multi-speed setting (low speed)	0 to 400Hz	Set the output frequency for stop-on-contact control. The frequency should be as low as possible (about 2Hz). If it is set to more than 30Hz, the operating frequency will be 30Hz. When stop-on-contact control is to be exercised during PLG feedback control, PLG feedback control is made invalid when the inverter enters the stop-on-contact control mode.
48	Second stall prevention operation current	0 to 200%	Set the stall prevention operation for stop-on-contact control.
275	Stop-on-contact exciting current low-speed multiplying factor	0 to 1000%	Usually set a value between 130% and 180%. Set the force (holding torque) for stop-on-contact control.
		9999	No compensation
276	Stop-on-contact PWM carrier frequency	0, 1, 2	Set a PWM carrier frequency for stop-on-contact control. (Valid at the frequency of 3Hz or less)
		9999	Conforms to the Pr. 72 "PWM carrier frequency selection".

- Function switch-over when stop-on-contact control is selected

Operation Mode (External)	Ordinary Operation		Stop-on-Contact Control		Remarks
RL, RT terminals	RL	RT	RL	RT	
Main function	Either is OFF		ON	ON	
Output frequency for a stop on contact	Multi-speeds 0 to 5V, 0 to 10V 4 to 20mA		Pr. 6 "low-speed frequency"		
Stall prevention operation level	Pr. 22 (stall prevention operation level)		Pr. 48 (second stall prevention operation current)		When RL and RT are on, Pr. 49 (second stall prevention operation frequency) is invalid.
Exciting current low-speed multiplying factor			The current is compensated for by the multiplying factor (0 to 1000%) set in Pr. 275 before RL and RT are switched on.		
Carrier frequency	Pr. 72 "PWM frequency selection" (0, 1, 2)		Pr. 276 (stop-on-contact PWM carrier frequency) (0, 1, 2, 9999)		
Fast-response current limit	Yes		No		

・Frequencies set in stop-on-contact control (Pr. 270 = 1 or 3) (In external operation mode)
The following table lists the frequencies set when the input terminals (RH, RM, RL, RT, JOG) are selected together.

Input Signals					Set Frequency	Stop-on-Contact Control Function	Remarks
RH	RM	RL	RT	JOG			
○					Speed 1 (high speed) Pr.4		
	○				Speed 2 (middle speed) Pr.5		
		○			Speed 3 (low speed) Pr.6		
			○		According to 0-5V, 0-10V, 4-20mA		
				○	Jog frequency Pr.15		
○	○				Speed 6 Pr.26		Middle speed when Pr. 26 = 9999
○		○			Speed 5 Pr.25		Low speed when Pr. 25 = 9999
○			○		Speed 1 (high speed) Pr.4		
○				○	Jog frequency Pr.15		
	○	○			Speed 4 Pr.24		Low speed when Pr. 24 = 9999
	○		○		Speed 2 (middle speed) Pr.5		
	○			○	Jog frequency Pr.15		
		○	○		Speed 3 (low speed, stop-on-contact frequency) Pr.6	⊙	
		○		○	Jog frequency Pr.15		
			○	○	Jog frequency Pr.15		
		○	○	○	Jog frequency Pr.15		
	○		○	○	Jog frequency Pr.15		
	○	○		○	Jog frequency Pr.15		
	○	○	○		Speed 3 (low speed, stop-on-contact frequency) Pr.6	⊙	
○			○	○	Jog frequency Pr.15		
○		○		○	Jog frequency Pr.15		
○		○	○		Speed 3 (low speed, stop-on-contact frequency) Pr.6	⊙	
○	○			○	Jog frequency Pr.15		
○	○		○		Speed 6 Pr.26		Middle speed when Pr. 26 = 9999
○	○	○			Speed 7 Pr.27		Low speed when Pr. 27 = 9999
	○	○	○	○	Jog frequency Pr.15		
○		○	○	○	Jog frequency Pr.15		
○	○		○	○	Jog frequency Pr.15		
○	○	○		○	Jog frequency Pr.6		
○	○	○	○		Speed 3 (low speed, stop-on-contact frequency) Pr.6	⊙	
○	○	○	○	○	Jog frequency Pr.15		
					According to 0-5V, 0-10V, 4-20mA		

*⊙ indicates that the function is selected.

Note: 1. ○ indicates that the signal is on.
2. Indicates that the remote setting function is not selected. (The remote setting function disables stop-on-contact control.)
3. The selection of the 12-bit digital speed input FR-A5AX (option) makes the above list invalid. Note that when both RL and RT are on, the frequency is as set in Pr. 6 and stop-on-contact control is exercised.
4. The jog frequency has the highest priority.
5. When the terminal functions are changed using Pr. 180 to Pr. 186, the other functions may be affected. Confirm the functions of the corresponding terminals before making settings.

Pr. 278 "brake opening frequency"

Pr. 279 "brake opening current"

Pr. 280 "brake opening current detection time"

Pr. 281 "brake operation time at start"

Pr. 282 "brake operation frequency"

Pr. 283 "brake operation time at stop"

Pr. 284 "deceleration detection function selection"

Pr. 285 "overspeed detection frequency"

Related parameters

Pr. 60 "intelligent mode selection"
Pr. 80 "motor capacity"
Pr. 81 "number of motor poles"
Pr. 180 to Pr. 186 (input terminal function selection)
Pr. 190 to Pr. 195 (output terminal function selection)

This function is used to output from the inverter the mechanical brake opening completion signal timing signal in vertical lift and other applications.
This function prevents the load from dropping with gravity at starting due to the operation timing fault of the mechanical brake or an overcurrent alarm from occurring at a stop, ensuring secure operation.

- The mechanical brake opening completion signal may either be entered or not entered into the inverter.
- This function is only valid when "7" or "8" is set in Pr. 60 to select brake sequence mode.

Parameter Number	Factory Setting	Setting Range
278	3Hz	0 to 30Hz
279	130%	0 to 200%
280	0.3 sec	0 to 2 sec
281	0.3 sec	0 to 5 sec
282	6Hz	0 to 30Hz
283	0.3 sec	0 to 5 sec
284	0	0, 1
285	9999	0 to 30Hz, 9999

<Wiring example>

・ Sink logic
・ Pr.184= 15
・ Pr.190 = 20

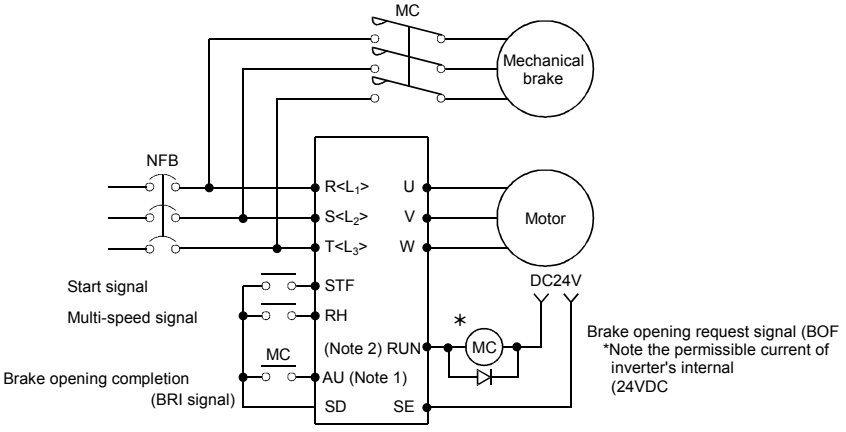

Note: 1. The input signal terminal used depends on the Pr. 180 to Pr. 186 settings.
2. The output signal terminal used depends on the Pr. 190 to Pr. 195 settings.

<Operation example>

- At start: When the start signal is input to the inverter, the inverter starts running. When the output frequency reaches the value set in Pr. 278 and the output current is not less than the value set in Pr. 279, the inverter outputs the brake opening request signal (BOF) after the time set in Pr. 280 has elapsed.
  When the time set in Pr. 281 elapses after the brake opening completion signal (BRI) was activated, the inverter increases the output frequency to the set speed.
- At stop: When the speed has decreased to the frequency set in Pr. 282, the brake opening request signal (BOF) is switched off. When the time set in Pr. 283 elapses after the brake operation confirmation signal (BRI) was activated, the inverter output is switched off.
  * If Pr. 60 = "8" (mechanical brake opening completion signal not input), this time is the time after the brake opening request signal is output.

1) Pr. 60 = "7" (brake opening completion signal input)

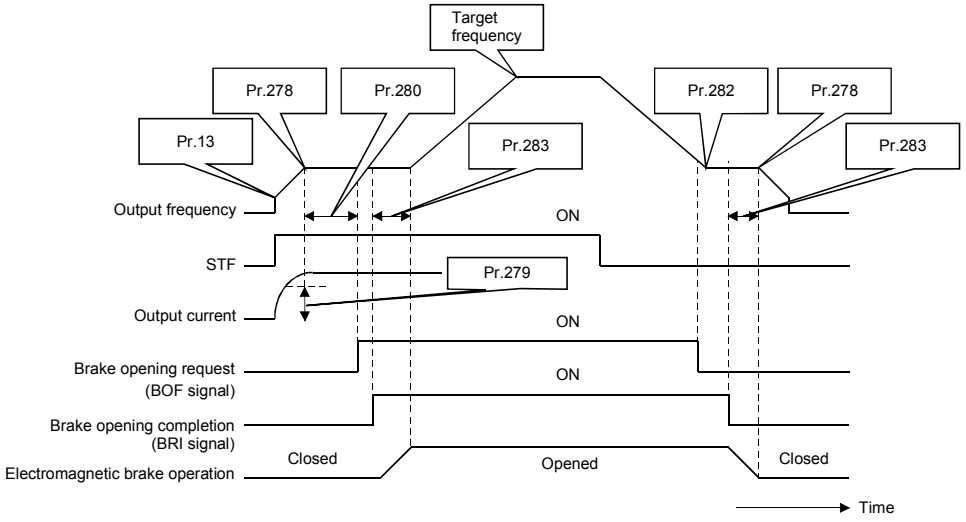

2) Pr. 60 = "8" (mechanical brake opening completion signal not input)

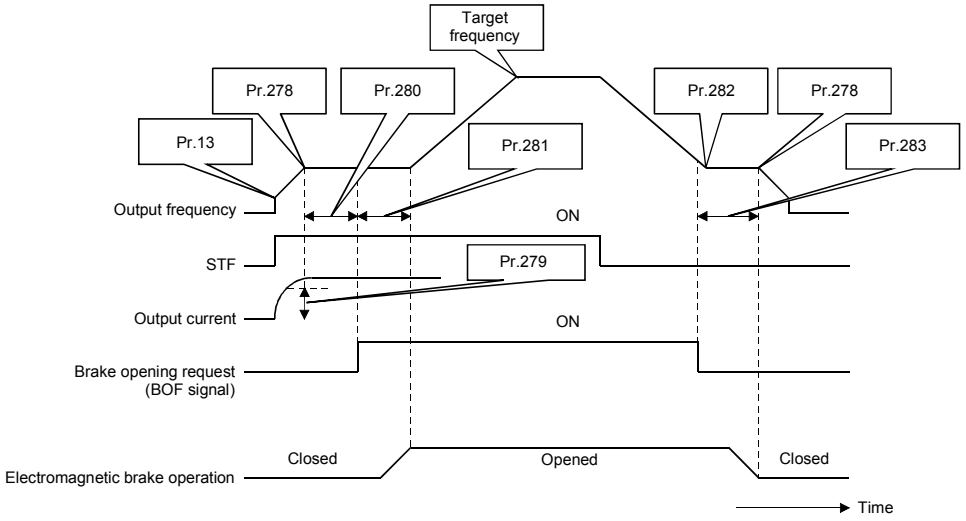

<Setting>

(1) Parameter setting

1) Select advanced magnetic flux vector control. (Pr. 80, Pr. 81 ≠"9999")
2) Set "7 or 8" (brake sequence mode) in Pr. 60.
   To ensure more complete sequence control, it is recommended to set "7" (brake opening completion signal input) in Pr. 60. Note that the automatic restart after instantaneous power failure function is not activated when the brake sequence mode is selected.
3) Refer to the following table and set the parameters:

Parameter Number	Name	Setting	Description
278	Brake opening frequency	0 to 30Hz	Set to the rated slip frequency of the motor + about 1.0Hz. This parameter may only be set if Pr. 278 ≤ Pr. 282.
279	Brake opening current	0 to 200%	Generally, set this parameter to about 50-90%. If the setting is too low, the load is liable to drop with gravity at start. Suppose that the rated inverter current is 100%.
280	Brake opening current detection time	0 to 2 sec	Generally, set this parameter to about 0.1-0.3 seconds.
281	Brake operation time at start	0 to 5 sec	Pr. 60=7: Set the mechanical delay time until the brake is loosened. Pr. 60=8: Set the mechanical delay time until the brake is loosened + about 0.1-0.2 seconds.
282	Brake closing frequency	0 to 30Hz	At this frequency, the brake opening request signal (BOF) is switched off. Generally, set this parameter to the Pr. 278 setting + 3-4Hz. This parameter may only be set if Pr. 282 ≥ Pr. 278.
283	Brake operation time at stop	0 to 5 sec	Pr. 60=7: Set the mechanical delay time until the brake is closed + 0.1 seconds. Pr. 60=8: Set the mechanical delay time until the brake is closed + about 0.2-0.3 seconds.
284	Deceleration detection function selection	0	Deceleration is not detected.
		1	If deceleration is not normal during deceleration operation, the inverter alarm (E.MB2) is provided to shut off the output and switch off the brake opening request signal (BOF).
285	Overspeed detection frequency	0 to 30Hz	If (detected frequency) - (output frequency) > Pr. 285 in the PLG feedback control mode, the inverter alarm (E.MB1) is provided to shut off the output and switch off the brake opening request signal (BOF).
		9999	Overspeed is not detected.

Note: When using this function, set the acceleration time to 1 second or longer.

(2) Explanations of terminals used

The terminals must be allocated using Pr. 180 to Pr. 186 and Pr. 190 to Pr. 195.

Signal	Terminals Used	Brake Sequence Mode	
		Pr. 60=7 (with mechanical brake opening completion signal)	Pr. 60=8 (without mechanical brake opening completion signal)
BOF	According to Pr. 180 to Pr. 186	Brake opening request	Brake opening request
BRI	According to Pr. 190 to Pr. 195	Brake opening completion signal	——

Note: 1. The brake opening completion signal (BRI) is a parameter valid when Pr. 60=7.
2. When the terminal functions are changed using Pr. 180 to 186 and Pr. 190 to Pr. 195, the other functions may be affected. Confirm the functions of the corresponding terminals before making settings.

(3) Protective functions

If any of the following errors occur in the brake sequence mode, the inverter results in an alarm, shuts off the output and switches off the brake opening request signal (BOF terminal).
On the operation panel (FR-DU04) LED and parameter unit (FR-PU04) screen, the following errors are displayed:

Error Display	Error Display
E.MB1	(Detected frequency) - (output frequency) > Pr. 286 in the PLG feedback control mode. (Overspeed detection function)
E.MB2	Deceleration is not normal during deceleration operation (Use Pr. 284 to select this function.) (Except stall prevention operation)
E.MB3	Brake opening request signal (BOF) switched on though the motor is at a stop. (Gravity drop prevention function)
E.MB4	More than 2 seconds after the run command (forward or reverse rotation) is input, the brake opening request signal (BOF) does not switch on.
E.MB5	More than 2 seconds after the brake opening request signal switched on, the brake opening completion signal (BRI) does not switch on.
E.MB6	Though the inverter had switched on the brake opening request signal (BOF), the brake opening completion signal (BRI) switched off during that period.
E.MB7	More than 2 seconds after the brake opening request signal (BOF) switched off at a stop, the brake opening completion signal (BRI) does not switch off.

Note: During PLG feedback control (when the FR-A5AP option is loaded), overspeed detection (Pr. 285) is valid if the Pr. 60 setting is other than “7” or ”8”.

Pr. 286 "Droop gain"

Pr. 287 "Droop filter time constant"

Related parameters
Pr. 9 "Electronic thermal O/L relay"
Pr. 71 "Applied motor"
Pr. 84 "Rated motor frequency"

This function balances the load in proportion to the load torque with or without PLG, and provides speed drooping characteristics.
This is effective in balancing the load when using multiple inverters.

- The output frequency is varied according to the amount of torque current during unbalanced flux vector control and vector control.
  The drooping amount at the rated torque is set by the droop gain as a percentage using the rated frequency as a reference.

$$\text{Droop compensation frequency} = \frac{\text{Amount of torque current after filtering}}{\text{Rated current}} \times \frac{\text{Rated frequency} \times \text{Droop gain}}{100}$$

- Confirm the following items when using the droop control.
  1. This function is valid when Pr. 286 ≠ "0" during unbalanced flux vector and vector control.
  2. This function is valid when the operation state is constant speed operation.
  3. The upper limit of the droop compensation frequency is 120Hz.
  4. The rated current follows the value set in Pr. 9 “Motor rated current”.

Parameter Number	Name	Setting Range	Min. Setting Unit	Default Value
286	Droop gain	0 to 100%	0.01%	0%
287	Droop filter time constant	0.00 to 1.00s	0.01s	0.3s

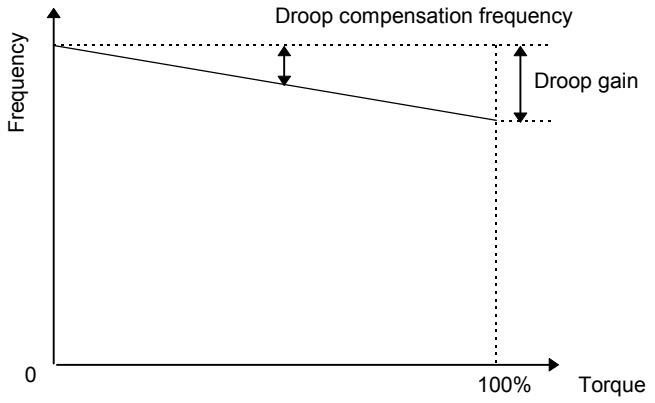

<Setting>

Refer to the following table and set each parameter.

Parameter Number	Details
286	Set the drooping at the rated torque as a percentage with respect to the rated frequency. When the setting value is “0”, the function will be invalid (no droop control).
287	Set the time constant of the filter applied on the torque amount current.

Pr. 571 "Start holding time"

Parameter Number	Factory Setting	Setting Range	Min. Setting Range	Name	Screen Display
571	9999	0 to 10S, 9999	0.1S	Start holding time	———

- The output frequency will be held at the start frequency for the time set in Pr. 571.
  This setting is invalid when Pr. 571 is set to 9999.
  This setting is invalid during automatic tuning, primary flux and instantaneous low restart.

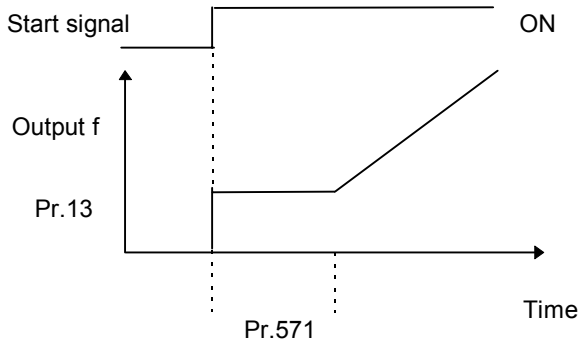

Pr. 900 "FM terminal calibration"

Pr. 901 "AM terminal calibration"

Related parameters

Pr. 54 "FM terminal function selection"
Pr. 55 "frequency monitoring reference"
Pr. 56 "current monitoring reference"
Pr. 158 "AM terminal function selection"

- By using the operation panel/parameter unit, you can calibrate a meter connected to terminal FM to full scale.
- Terminal FM provides the pulse output. By setting Pr. 900, you can calibrate the meter connected to the inverter from the parameter unit without providing a calibration resistor.
- You can display a digital value on a digital counter using the pulse train signal from terminal FM. A 1440Hz output is provided at the full scale value as explained in the section of Pr. 54. When the running frequency has been selected for monitoring, the ratio of this FM terminal output frequency can be set in Pr. 55.

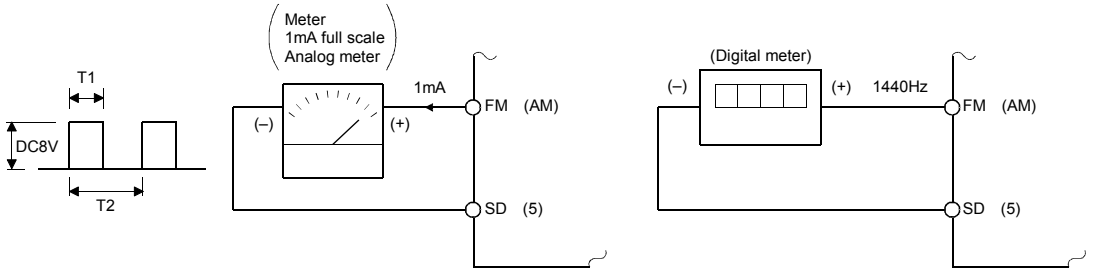

Pulse width T1 :Adjusted with Pr. 900
Pulse period T2 :Set in Pr. 55 (valid for frequency monitoring only)

Note: The parameter is factory-set to 1mA full-scale or 1440Hz FM output frequency at 60Hz<50Hz>.

- Terminal AM is factory-set to provide a 10VDC output in the full-scale state of each monitored data. Pr. 901 allows the output voltage ratio (gain) to be adjusted according to the meter reading. Note that the maximum output voltage is 10VDC.

(1) Calibration of terminal FM

1) Connect a meter (frequency meter) across inverter terminals FM-SD. (Note the polarity. FM is the positive terminal.)
2) When a calibration resistor has already been connected, adjust the resistance to "0" or remove the resistor.
3) Set any of "1 to 3, 5 to 14, 17, 18 and 21" in Pr. 54.
   When the running frequency or inverter output current has been selected as the output signal, preset in Pr. 55 or Pr. 56 the running frequency or current at which the output signal is 1440Hz.
   At this 1440Hz, the meter normally deflects to full scale.

(2) Calibration of terminal AM

1) Connect a 0-10VDC meter (frequency meter) across inverter terminals AM-5. (Note the polarity. AM is the positive terminal.)
2) Set any of "1 to 3, 5 to 14, 17, 18 and 21" in Pr. 158.
   When the running frequency or inverter output current has been selected as the output signal, preset in Pr. 55 or Pr. 56 the running frequency or current at which the output signal is 10V.
3) When outputting a signal which cannot achieve a 100% value easily by operation, e.g. output current, set "21" in Pr. 158 and perform the following operation. After that, set "2" (output current, for example) in Pr. 158.

<Operation procedure>

・ When operation panel (FR-DU04) is used

1) Select the PU operation mode.

↓

2) Set the running frequency.

↓

3) Press the [SET] key.

↓

4) Read Pr. 900 “FM terminal calibration” or Pr. 901 “AM terminal calibration”.

↓

5) Press the [FWD] key to run the inverter. (Motor need not be connected.)

↓

6) Using the [UP/DOWN] key, adjust the meter pointer to the required position. (The pointer takes some time to move.)

↓

7) Press the [SET] key for about 1.5 seconds.

↓

8) Press the [STOP/RESET] key to stop the inverter.

Note: 1. Pr. 900 is factory-set to 1mA full-scale or 1440Hz FM output frequency at 60Hz<50Hz>. The maximum pulse train output of terminal FM is 2400Hz.
2. When a frequency meter is connected across terminals FM-SD to monitor the running frequency, the FM terminal output is filled to capacity at the factory setting if the maximum output frequency reaches or exceeds 100Hz<83Hz>. In this case, the Pr. 55 setting must be changed to the maximum frequency.
3. For the operation procedure using the parameter unit (FR-PU04), refer to the FR-PU04 instruction manual.

Pr. 902 "frequency setting voltage bias"

Pr. 903 "frequency setting voltage gain"

Pr. 904 "frequency setting current bias"

Pr. 905 "frequency setting current gain"

Related parameters

Pr. 20 "acceleration/deceleration reference frequency"
Pr. 73 "0-5/0-10V selection"

You can set the output frequency as desired in relation to the frequency setting signal (0 to 5V, 0 to 10V or 4 to 20mA DC).

The "bias" and "gain" functions are used to adjust the relationship between the input signal entered from outside the inverter to set the output frequency, e.g. 0 to 5VDC, 0 to 10VDC or 4 to 20mADC, and the output frequency.

- Use Pr. 902 to set the bias frequency at 0V.
- Use Pr. 903 to set the output frequency relative to the frequency command voltage set in Pr. 73.
- Use Pr. 904 to set the bias frequency at 4mA.
- Use Pr. 905 to set the output frequency relative to the 20mA frequency command current (4 to 20mA).

Parameter Number	Factory Setting		Setting Range	
902	0V	0Hz	0 to 10V	0 to 60Hz
903	5V	60Hz<50Hz>	0 to 10V	1 to 400Hz
904	4mA	0Hz	0 to 20mA	0 to 60Hz
905	20mA	60Hz<50Hz>	0 to 20mA	1 to 400Hz

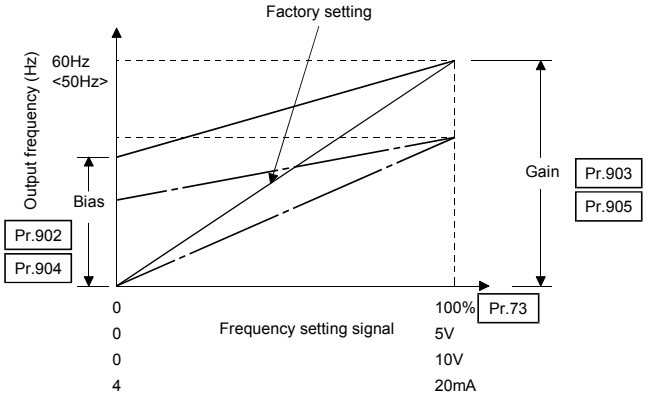

<Setting>

(1) The frequency setting voltage biases and gains may be adjusted in either of the following two ways:
  1) Any point can be adjusted with a voltage applied across terminals 2-5.
  2) Any point can be adjusted with no voltage applied across terminals 2-5.
  3) Bias voltage is not adjusted.

(2) The frequency setting current biases and gains may be adjusted in either of the following two ways:
  1) Any point can be adjusted with a current flowing at terminal 4.
  2) Any point can be adjusted with no current flowing at terminal 4.
  3) Bias current is not adjusted.

<Adjustment procedure> Pr. 902 (Pr. 904) "frequency setting voltage (current) bias"

・ When operation panel (FR-DU04) is used

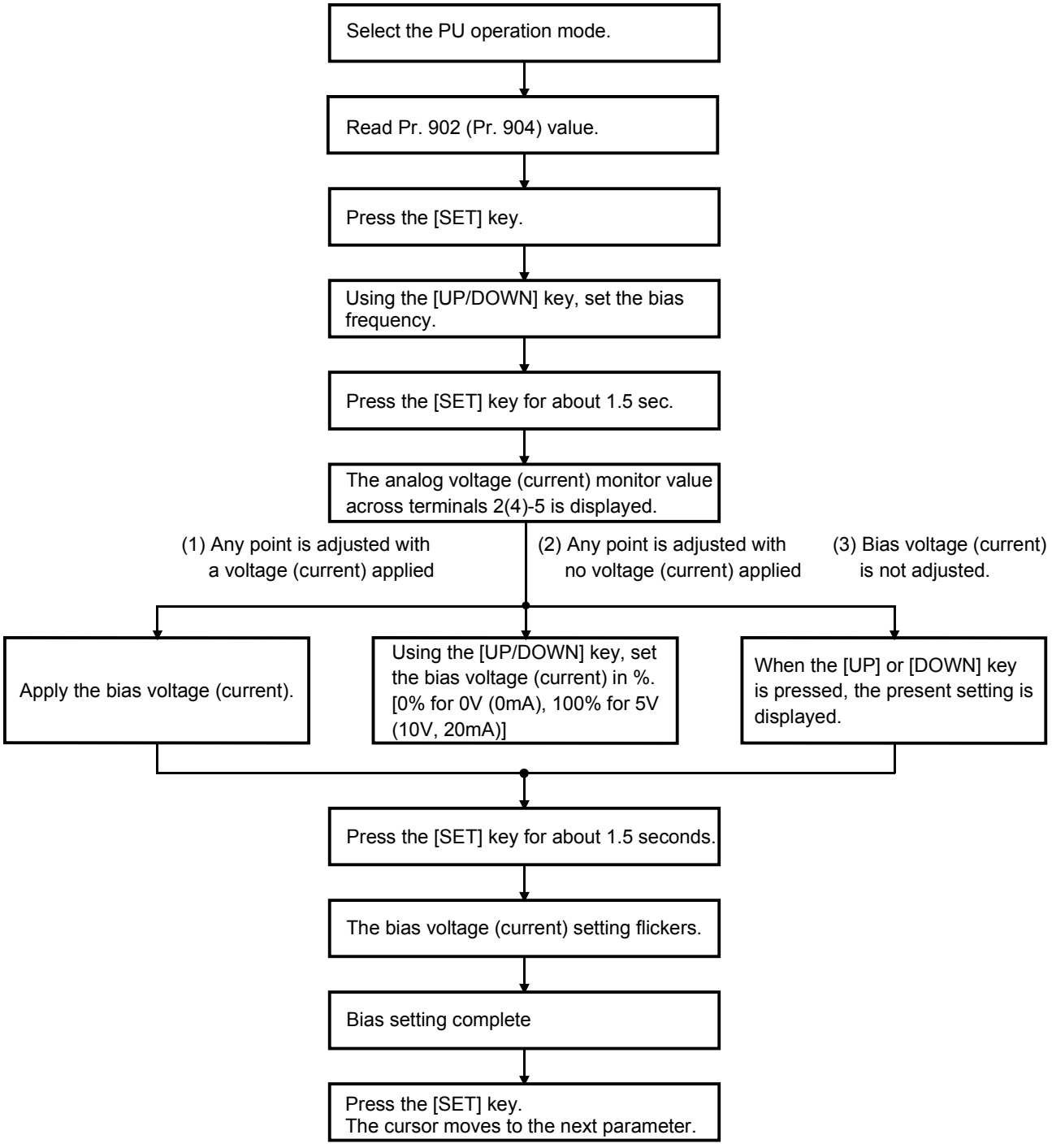

*Pr. 903 to Pr. 905 can also be adjusted similarly using the above procedure.

Note: 1. If the Pr. 903 or Pr. 905 (gain adjustment) value is changed, the Pr. 20 value does not change. The input signal to terminal 1 (frequency setting auxiliary input) is added to the frequency setting signal.
2. For the operation procedure using the parameter unit (FR-PU04), refer to the FR-PU04 instruction manual.

⚠ CAUTION

Be careful when setting any value other than "0". Even without the speed command, the motor will start running at the set frequency by merely switching on the start signal.

Pr. 990 "buzzer control"

You can make the buzzer "beep" when you press any key of the operation panel or parameter unit.

Parameter Number	Factory Setting	Setting Range	Remarks
990	1	0, 1	0: Without beep, 1: With beep

CHAPTER 5

PROTECTIVE FUNCTIONS

This chapter explains the "protective functions" of this product.
Always read the instructions before using the equipment.

5.1 Errors (Alarms) ····· 155
5.2 Troubleshooting ····· 161
5.3 Precautions for Maintenance and Inspection ··· 165

5.1 Errors (Alarms)

If any fault has occurred in the inverter, the corresponding protective function is activated and the error (alarm) indication appears automatically on the PU display. When the protective function is activated, refer to "5.2 Troubleshooting" and clear up the cause by taking proper action. If an alarm stop has occurred, the inverter must be reset to restart it.

5.1.1 Error (alarm) definitions

Operation Panel Display (FR-DU04)	Parameter Unit (FR-PU04)	Name		Description
E.OC1	OC During Acc	During acceleration	Overcurrent shut-off	When the inverter output current reaches or exceeds approx. 200% of the rated current, the protective circuit is activated to stop the inverter output.
E.OC2	Stedy Spd OC	During constant speed		
E.OC3	OC During Dec	During deceleration During stop		
E.OV1	OV During Acc	During acceleration	Regenerative overvoltage shut-off	If regenerative energy from the running motor causes the inverter's internal main circuit DC voltage to reach or exceed the specified value, the protective circuit is activated to stop the inverter output. This may also be activated by a surge voltage generated in the power supply system.
E.OV2	Stedy Spd OV	During constant speed		
E.OV3	OV During Dec	During deceleration During stop		
E.THM	Motor Ovrload	Overload shut-off (electronic overcurrent protection)	Motor	The electronic overcurrent protection in the inverter detects motor overheat due to overload or cooling capability reduced during constant-speed operation. When 85% of the preset value is reached, pre-alarm (TH indication) occurs. When the specified value is reached, the protective circuit is activated to stop the inverter output. When a special motor such as a multi-pole motor or more than one motor is run, the motor cannot be protected by the electronic overcurrent protection. Provide a thermal relay in the inverter output circuit.
E.THT	Inv. Overload		Inverter	If a current not less than 150% of the rated output current flows and overcurrent shut-off (OC) does not occur (200% or less), inverse-time characteristics cause the electronic overcurrent protection to be activated to stop the inverter output. (Overload immunity: 150%, 60 sec) At low-speed regions, the operation time may be short.
E.IPF	Inst.Pwr. Loss	Instantaneous power failure protection		If a power failure has occurred in excess of 15msec (this applies also to inverter input shut-off), this function is activated to stop the inverter output to prevent the control circuit from misoperation. At this time, the alarm output contacts are opened (across B-C) and closed (across A-C). (Note 1) If a power failure persists for more than 100ms, the alarm output is not provided, and if the start signal is on at the time of power restoration, the inverter will restart. (If a power failure is instantaneous within 15msec, the control circuit operates properly.)
E.UVT	Under Voltage	Undervoltage protection		If the inverter power supply voltage drops, the control circuit will not operate properly. Furthermore, the motor torque could drop and the heat generated may increase. The inverter output will be stopped if the power supply voltage drops to 150V (approx. 300V for 400V class) or less. The undervoltage protection function will activate if the DC reactor accessory is not used.
E.FIN	H/Sink O/Temp	Fin overheat		If the cooling fin overheats, the temperature sensor is activated to stop the inverter output.

Operation Panel Display (FR-DU04)	Parameter Unit (FR-PU04)	Name	Description
E. GF	Ground Fault	Output side ground fault overcurrent protection	This function stops the inverter output if a ground fault occurs in the inverter's output (load) side and a ground fault current flows. A ground fault occurring at low ground resistance may activate the overcurrent protection (OC1 to OC3).
E.OHT	OH Fault	External thermal relay operation (Note 3)	If the external thermal relay designed for motor overheat protection or the internally mounted temperature relay in the motor switches on (relay contacts "open"), the inverter output can be stopped if those contacts had been entered into the inverter. If the relay contacts are reset automatically, the inverter will not restart unless it is reset.
E.OLT (When stall prevention operation has reduced the running frequency to 0. OL during stall prevention operation)	Stll Prev STP (OL shown during stall prevention operation)	During acceleration	If a current not less than 150% (Note 4) of the rated inverter current flows in the motor, this function lowers the frequency until the load current reduces to prevent the inverter from resulting in overcurrent shut-off. When the load current has reduced below 150%, this function increases the frequency again to accelerate and operate the inverter up to the set frequency.
		During constant-speed operation	If a current not less than 150% (Note 4) of the rated inverter current flows in the motor, this function lowers the frequency until the load current reduces to prevent overcurrent shut-off. When the load current has reduced below 150%, this function increases the frequency up to the set value.
		During deceleration	If the regenerative energy of the motor has increased above the brake capability, this function increases the frequency to prevent overvoltage shut-off. If a current not less than 150% (Note 4) of the rated inverter current flows in the motor, this function increases the frequency until the load current reduces to prevent the inverter from resulting in overcurrent shut-off. When the load current has reduced below 150%, this function decreases the frequency again.
E.OPT	Option Fault	Option alarm	・Stops the inverter output if the dedicated inboard option used in the inverter results in setting error or connection (connector) fault. • When the high power factor converter connection is selected, this alarm is displayed if AC power is connected to R, S, T.
E.OP1 to OP3	Option slot alarm 1 to 3	Option slot alarm	Stops the inverter output if a functional fault (such as communication error of the communication option) occurs in the inboard option loaded in any slot.
E. PE	Corrupt Memry	Parameter error	Stops the output if a fault occurs in E^2PROM which stores parameter settings.
E.PUE	PU Leave Out	PU disconnection occurrence	This function stops the inverter output if communication between inverter and PU is suspended, e.g. the operation panel or parameter unit is disconnected, when "2", "3", "16" or "17" is set in Pr. 75 "reset selection/PU disconnection detection/PU stop selection". This function stops the inverter output if the number of successive communication errors is greater than the number of permissible retries when Pr. 121 value is "9999" for RS-485 communication from PU connector. This function stops the inverter output if communication is broken for a period of time set in Pr. 122.
E.RET	Retry No Over	Retry count exceeded	If operation cannot be resumed within the number of retries set, this function stops the inverter output.
E.LF	——	Open output phase protection	This function stops the inverter output when any of the three phases (U, V, W) on the inverter's output side (load side) opens.
E.CPU	CPU Fault	CPU error	If the arithmetic operation of the built-in CPU does not end within a predetermined period, the inverter self-determines it has an alarm and stops the output.
E.E6	CPU Error	CPU error	If the arithmetic operation of the peripheral circuit of the built-in CPU does not end within a predetermined period, the inverter self-determines it as an alarm and stops the output.
E.E7	CPU Error	CPU error	The inverter output is stopped if a data error occurs in the peripheral circuit of the built-in CPU.
E.P24	——	24VDC power output short circuit	When 24VDC power output from the PC terminal is shorted, this function shuts off the power output. At this time, all external contact inputs switch off. The inverter cannot be reset by entering the RES signal. To reset, use the operation panel or switch power off, then on again.

Operation Panel Display (FR-DU04)	Parameter Unit (FR-PU04)	Name	Description
E.CTE	——	Operation panel power short circuit	When the operation panel power (P5S of the PU connector) is shorted, this function shuts off the power output. At this time, the operation panel (parameter unit) cannot be used and RS-485 communication from the PU connector cannot be made. To reset, enter the RES signal or switch power off, then on again.
——	——	Brake resistor overheat protection	When the regenerative brake duty from the motor has reached 85% of the specified value, pre-alarm (RB indication) occurs. If the specified value is exceeded, the brake circuit operation is stopped temporarily to protect the brake resistor from overheating. (If the brake is operated in this state, regenerative overvoltage shut-off will occur.) When the brake resistor has cooled, the brake operation is resumed.
E.MB1 to MB7	——	Brake sequence error	This function stops the inverter output if a sequence error occurs during the use of the brake sequence function (Pr. 278 to Pr. 285).
E.15	E.15	Main circuit error	Brake unit cooling fin overheat, DC fuse blown, control board ambient temperature error, output overcurrent, cooling fan power supply error, capacitor overcurrent, cooling fin overheat, gate power supply error. Refer to the next page (page 158) for details.
Err	——	error	The inverter output is stopped if a malfunction occurs in the built-in CPU

Note:
1. If Pr. 195 (A, B, C terminal function selection) is as set in the factory.
2. The terminals used must be allocated using Pr. 190 to Pr. 195.
3. External thermal relay operation is only activated when "OH" is set in any of Pr. 180 to Pr. 186 (input terminal function selection).
4. Indicates that the stall prevention operation level has been set to 150% (factory setting). If this value is changed, stall prevention is operated at the new value.
5. Resetting method
   When the protective function is activated and the inverter stops its output (the motor is coasted to a stop), the inverter is kept stopped. Unless reset, the inverter cannot restart. To reset the inverter, use any of the following methods: switch power off once, then on again; short reset terminal RES-SD for more than 0.1 seconds, then open; press the [RESET] key of the parameter unit (use the help function of the parameter unit). If RES-SD is kept shorted, the operation panel will show "Err." or the parameter unit will show that the inverter is being reset.

Main circuit error [E,15] details

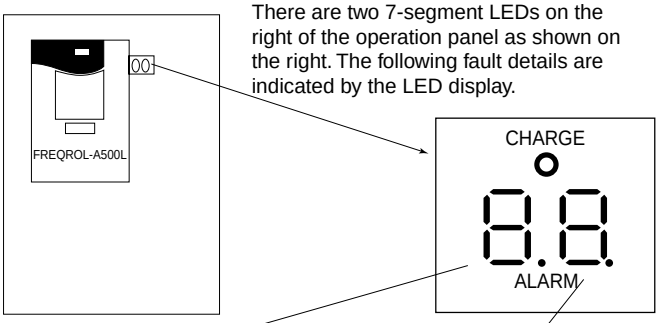

There are two 7-segment LEDs on the right of the operation panel as shown on the right. The following fault details are indicated by the LED display.

Left LED	Brake unit cooling fin overheating	DC fuse blown	Control board ambient temperature error	Output overcurrent
0.				
1.				○
2.			○	
3.			○	○
4.		○		
5.		○		○
6.		○	○	
7.		○	○	○
8.	○			
9.	○			○
c.	○		○	
J.	○		○	○
U.	○	○		
E.	○	○		○
t.	○	○	○	
.	○	○	○	○

Right LED	Cooling fan power supply error	___ overcurrent	Cooling fin overheat	Gate power supply error
0.				
1.				○
2.			○	
3.			○	○
4.		○		
5.		○		○
6.		○	○	
7.		○	○	○
8.	○			
9.	○			○
c.	○		○	
J.	○		○	○
U.	○	○		
E.	○	○		○
t.	○	○	○	
.	○	○	○	○

※For example, if the display is 4. 5., the DC fuse blown, ___ overcurrent and gate power supply errors have occurred.

Name	Details
Brake unit cooling fin overheating	The inverter output will stop if the brake unit's cooling fin temperature rises above the specified value.
DC fuse blown	The inverter output will stop if the DC fuse blows.
Control board ambient temperature error	The inverter output will stop if the ambient temperature of the control board rises above the specified value.
Output overcurrent	The inverter output will stop if the inverter's output current flows above the specified value.
Cooling fan power supply error	The inverter output will stop if the cooling fan's power drops below the specified value.
Capacitor overcurrent	The inverter will stop if a current exceeding the specified value flows to the main circuit smoothing capacitor.
Cooling fin overheat	The inverter output will stop if the cooling fin's temperature rises above the specified value.
Gate power supply error	The inverter output will stop if the gate power supply voltage drops below the specified value.

● To know the operating status at the occurrence of alarm

When any alarm has occurred, the display automatically switches to the indication of the corresponding protective function (error). By pressing the [MODE] key at this point without resetting the inverter, the display shows the output frequency. In this way, it is possible to know the running frequency at the occurrence of the alarm. It is also possible to know the current in the same manner. However, these values are not stored in memory and are erased when the inverter is reset.

5.1.2 Correspondences between digital and actual characters

There are the following correspondences between the actual alphanumeric characters and the digital characters displayed on the operation panel:

Actual	Digital
0	0
1	1
2	2
3	3
4	4
5	5
6	6
7	7
8	8
9	9

Actual	Digital
A	A
B	b
C	C
E	E
F	F
G	G
H	H
I	I
J	J
L	L

Actual	Digital
M	M
N	n
O	O
o	o
P	P
T	T
U	U
V	v
r	r
-	-

5.1.3 Alarm code output

By setting Pr. 76 "alarm code output selection", an alarm definition can be output as a 4-bit digital signal. This signal is output from the open collector output terminals equipped as standard on the inverter.
Correlations between alarm definitions and alarm codes are as follows.

Operation Panel Display (FR-DU04)	Output Terminal Signal On-Off				Alarm Code	Alarm Output (across B-C)
	SU	IPF	OL	FU		
E.OC1	0	0	0	1	1	Provided (Open)
E.OC2	0	0	1	0	2	
E.OC3	0	0	1	1	3	
E.OV1	0	1	0	0	4	Provided (Open)
E.OV2						
E.OV3						
E.THM	0	1	0	1	5	Provided (Open)
E.THT	0	1	1	0	6	
E.IPF	0	1	1	1	7	Provided (Open)
E.UVT	1	0	0	0	8	Provided (Open)
E.FIN	1	0	0	1	9	Provided (Open)
E. 15	1	0	1	0	A	Provided (Open)
E. GF	1	0	1	1	B	Provided (Open)
E.OHT	1	1	0	0	C	Provided (Open)
E.OLT	1	1	0	1	D	Not provided (Provided when OLT is displayed) (Open)
E.OPT	1	1	1	0	E	Provided (Open)
E.OP1 to E.OP3	1	1	1	0	E	Provided (Open)
E. PE	1	1	1	1	F	Provided (Open)
E.PUE						Provided (Open)
E.RET						Provided (Open)
E.LF						Provided (Open)
E.CPU						Provided (Open)
E.E6						Provided (Open)
E.E7						Provided (Open)

(Note) 0: Output transistor OFF, 1: Output transistor ON (common terminal SE)
The alarm output assumes that Pr. 195 setting is "99" (factory setting).

5.1.4 Resetting the inverter

The inverter can be reset by performing any of the following operations. Note that the electronic overcurrent protection's internal heat calculation value and the number of retries are cleared (erased) by resetting the inverter.

Operation 1: Using the operation panel (FR-DU04), press the [RESET] key to reset the inverter.
Operation 2: Switch power off once, then switch it on again.
Operation 3: Switch on the reset signal (RES).

5.2 Troubleshooting

If any function of the inverter is lost due to occurrence of a fault, clear up the cause and make correction in accordance with the following procedure. Contact your sales representative if the corresponding fault is not found below, the inverter has failed, parts have been damaged, or any other fault has occurred.

5.2.1 Checking the operation panel display at alarm stop

The alarm code is displayed on the operation panel to indicate the cause of a faulty operation. Clear up the cause and take proper action in accordance with the following table:

Operation Panel Display	Check Point		Remedy
E.OC1	Acceleration too fast? Check for output short circuit or ground fault.		Increase acceleration time.
E.OC2	Sudden load change? Check for output short circuit or ground fault.		Keep load stable.
E.OC3	Deceleration too fast? Check for output short circuit or ground fault. Mechanical brake of motor operating too fast?		Increase deceleration time. Check brake operation.
E.OV1	Acceleration too fast?		Increase acceleration time.
E.OV2	Sudden load change?		Keep load stable.
E.OV3	Deceleration too fast?		Increase deceleration time. (Set deceleration time which matches load GD^2.) Reduce braking duty.
E.THM E.THT	Motor used under overload?		Reduce load. Increase motor and inverter capacities.
E.IPF	Check the cause of instantaneous power failure.		Restore power.
E.UVT	Large-capacity motor started? Jumper or DC reactor connected across terminals P-P1?		Check power system equipment such as power supply. Connect jumper or DC reactor across terminals P-P1.
E.FIN	Ambient temperature too high?		Set ambient temperature within specifications.
E. GF	Check motor and cables for ground fault.		Resolve ground faults.
E.OHT	Check motor for overheat.		Reduce load and frequency of operation.
E.OLT	Motor used under overload?		Reduce load. Increase motor and inverter capacities.
E.OPT	Check for loose connectors.		Connect securely
E.OP1 to E.OP3	Option function setting or operation proper? (1 to 3 indicate the option slot numbers.)		Check the option function setting, etc.
E. PE	Number of parameter write times too many?		Control card
E.PUE	DU or PU fitted securely?		Fit DU or PU securely.
E.RET	Check cause of alarm.		
E.LF	Check for open output phase.		Repair open phase.
E.CPU E.E6 E.E7	Check for loose connectors.		Change inverter. Connect securely.
E.P24	Check PC terminal output for short.		Repair short.
E.CTE	Check PU connector cable for short.		Check PU and cable.
E.MB1 to MB7	Check brake sequence.		
PS	STOP key of operation panel pressed during external operation to stop?		Check load status. Refer to page 79.
RB	Brake resistor used too often?		Increase deceleration time.
TH	Load too large? Sudden acceleration?		Reduce load amount or frequency of running.
OL	Motor used under overload? Sudden deceleration? oL: Overvoltage stall OL: Overcurrent stall		Lighten load. Reduce frequency of braking.
E.15	Brake unit cooling fin overheating	Is the usage frequency of the brake unit appropriate? Are the cooling fins clogged? Is there any error in the inverter unit cooling fan?	Reduce the load GD^2. Reduce the braking frequency. Clean the cooling fins. Replace the cooling fan.
	DC fuse blown	Is the DC circuit short circuited?	Repair the short-circuited section, and replace the DC fuse.
	Control board ambient temperature error	Is there an error in the cooling fan? Is the ambient temperature too high?	Replace the cooling fan. Keep the ambient temperature within the specifications.

Operation Panel Display	Check Point		Remedy
E.15	Output over current	Is there an output short circuit or ground fault? (Check the motor winding and insulation resistance.) Was rapid acceleration attempted? Did the load fluctuate suddenly? Was rapid deceleration attempted? Were the motor's mechanical brakes applied too quickly?	Repair the output short circuit and ground fault. (Repair or replace the motor.) Lengthen the deceleration time. Eliminate the sudden fluctuate in the load. Lengthen the deceleration time. Investigate the braking operation.
	Cooling fan power supply error	Is the cooling fan's power supply output short circuited? Is the cooling fan's power supply abnormal? Is the fuse blown?	Repair the short-circuited section. Replace the cooling fan power supply. Replace the fuse.
	—— overcurrent	Is the DC circuit short circuited? Is there an output short circuit or ground fault? (Check the motor winding and insulation resistance.)	Repair the short-circuited section, and replace the DC fuse. Repair the output short circuit and ground fault. (Repair or replace the motor.)
	Cooling fin overheat	Is there an error in the cooling fan? Are the cooling fins clogged? Is the ambient temperature too high?	Replace the cooling fan. Clean the cooling fins. Keep the ambient temperature within the specifications.
	Gate power supply error	Is the gate output short circuited? Is there an error in the control power supply board?	Repair the short-circuited section. Replace the control power supply board.

- When the protective function is activated, take proper corrective action, reset the inverter, then resume operation.

5.2.2 Faults and check points

POINT: Check the corresponding areas. If the cause is still unknown, it is recommended to initialize the parameters (return to factory settings), re-set the required parameter values, and check again.

(1) Motor remains stopped.

1) Check the main circuit
   - Check that a proper power supply voltage is applied (operation panel display is provided).
   - Check that the motor is connected properly.
2) Check the input signals
   - Check that the start signal is input.
   - Check that both the forward and reverse rotation start signals are not input.
   - Check that the frequency setting signal is not zero.
   - Check that the AU signal is on when the frequency setting signal is 4 to 20mA.
   - Check that the output stop signal (MRS) or reset signal (RES) is not on.
   - Check that the CS signal is not off when automatic restart after instantaneous power failure is selected (Pr. 57 = other than "9999").
3) Check the parameter settings
   - Check that the reverse rotation prevention (Pr. 78) is not selected.
   - Check that the operation mode (Pr. 79) setting is correct.
   - Check that the bias and gain (Pr. 902 to Pr. 905) settings are correct.
   - Check that the starting frequency (Pr. 13) setting is not greater than the running frequency.
   - Check that various operational functions (such as three-speed operation), especially the maximum frequency (Pr. 1), are not zero.
4) Check the load
   - Check that the load is not too heavy.
   - Check that the shaft is not locked.
5) Others
   - Check that the ALARM lamp is not lit.
   - Check that the Pr. 15 "jog frequency" setting is not lower than the Pr. 13 "starting frequency" value.

(2) Motor rotates in opposite direction.

- Check that the phase sequence of output terminals U, V and W is correct.
- Check that the start signals (forward rotation, reverse rotation) are connected properly.

(3) Speed greatly differs from the setting.

- Check that the frequency setting signal is correct. (Measure the input signal level.)
- Check that the following parameter settings are proper: Pr. 1, Pr. 2, Pr. 902 to Pr. 905, Pr. 19.
- Check that the input signal lines are not affected by external noise. (Use shielded cables)
- Check that the load is not too heavy.

(4) Acceleration/deceleration is not smooth.

- Check that the acceleration and deceleration time settings are not too short.
- Check that the load is not too heavy.
- Check that the torque boost (Pr. 0, Pr. 46, Pr. 112) setting is not too large to activate the stall function.

(5) Motor current is large.

- Check that the load is not too heavy.
- Check that the torque boost (Pr. 0, Pr. 46, Pr. 112) setting is not too large.

(6) Speed does not increase.

- Check that the maximum frequency (Pr. 1) setting is correct.
- Check that the load is not too heavy. (In agitators, etc., load may become heavy in winter.)
- Check that the torque boost (Pr. 0, Pr. 46, Pr. 112) setting is not too large to activate the stall prevention function.

(7) Speed varies during operation.

During operation under advanced magnetic flux vector control, the output frequency varies with load fluctuation between 0 and 2Hz. This is a normal operation and is not a fault.

1) Inspection of load
   - Check that the load is not varying.
2) Inspection of input signal
   - Check that the frequency setting signal is not varying.
   - Check that the frequency setting signal is not affected by induced noise.
3) Others
   - Check that the settings of the applied motor capacity (Pr. 80) and the number of applied motor poles (Pr. 81) are correct for the inverter and motor capacities in advanced magnetic flux vector control.
   - Check that the wiring length is within 30m in advanced magnetic flux vector control.
   - Check that the wiring length is correct in V/F control.

(8) Operation mode is not changed properly.

If the operation mode is not changed properly, check the following:

1. External input signal ·····Check that the STF or STR signal is off.
   When it is on, the operation mode cannot be changed.
2. Parameter setting ·····Check the Pr. 79 setting.
   When the setting of Pr. 79 "operation mode selection" is "0" (factory setting), switching input power on places the inverter in the external operation mode. Press the operation panel's [MODE] key three times and press the [UP] key (press the [PU] key for the parameter unit (FR-PU04)). This changes the external operation mode into the PU operation mode. For any other setting (1 to 8), the operation mode is limited according to the setting.

(9) Operation panel (FR-DU04) display is not provided.

- Make sure that the operation panel is connected securely with the inverter.

(10) POWER lamp is not lit.

- Make sure that the wiring and installation are correct.

5.3 Precautions for Maintenance and Inspection

The transistorized inverter is a static unit mainly consisting of semiconductor devices. Daily inspection must be performed to prevent any fault from occurring due to adverse influence by the operating environment, such as temperature, humidity, dust, dirt and vibration, changes in the parts with time, service life, and other factors.

5.3.1 Precautions for maintenance and inspection

For some short time after the power is switched off, a high voltage remains in the smoothing capacitor. When accessing the inverter for inspection, switch power off. When more than 10 minutes have elapsed, make sure that the voltage across the main circuit terminals P-N of the inverter is 30VDC or less using a tester, etc.

5.3.2 Check items

(1) Daily inspections

- Check the following:
  1) Motor operation fault
  2) Improper installation environment
  3) Cooling system fault
  4) Unusual vibration and noise
  5) Unusual overheating and discoloration
- During operation, check the inverter input voltages using a tester.

(2) Cleaning

Always run the inverter in a clean state.
When cleaning the inverter, gently wipe dirty areas with a soft cloth immersed in neutral detergent or ethanol.
Note: Do not use solvent, such as acetone, benzene, toluene and alcohol, as they will cause the inverter surface paint to peel off.
Do not use detergent or alcohol to clean the display and other sections of the operation panel (FR-DU04) or parameter unit (FR-PU04) as these sections do not like them.

5.3.3 Periodic inspection

Check the areas inaccessible during operation and requiring periodic inspection. For periodic inspection, consult us.

1) Cooling system: ····· Clean the air filter, etc.
2) Screws and bolts: ····· These parts may become loose due to vibration, temperature changes, etc. Check that they are tightened securely and retighten as necessary.
3) Conductors and insulating materials: Check for corrosion and damage.
4) Insulation resistance: Measure.
5) Cooling fan, smoothing capacitor, relay: Check and change if necessary.

5.3.4 Insulation resistance test using megger

1) Before performing the insulation resistance test using a megger on the external circuit, disconnect the cables from all terminals of the inverter so that the test voltage is not applied to the inverter.
2) For the continuity test of the control circuit, use a tester (high resistance range) and do not use the megger or buzzer.
3) For the inverter, conduct the insulation resistance test on the main circuit only as shown below and do not perform the test on the control circuit. (Use a 500VDC megger.)

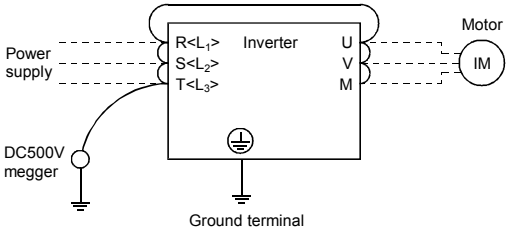

5.3.5 Dielectric strength test

Do not conduct a dielectric strength test. The inverter's main circuit uses semiconductors, which may be deteriorated if a pressure test is made.

Daily and Periodic Inspection

Area of Inspec-tion	Inspection Item	Description	Interval			Method	Criterion	Instrument
			Daily	Periodic 1 year	Periodic 2 years			
General	Surrounding environment	Check ambient temperature, humidity, dust, dirt, etc.	○			(Refer to page 6)	Ambient temperature: −10° C to +50° C, non-freezing. Ambient humidity: 90% or less, non-condensing.	Thermometer, hygrometer, recorder
	Overall unit	Check for unusual vibration and noise.	○			Visual and auditory checks.	No fault.	
	Power supply voltage	Check that main circuit voltage is normal.	○			Measure voltage across inverter terminals R-S-T <L_1-L_2-L_3>.	Within permissible AC voltage fluctuation (Refer to page 173)	Tester, digital multimeter
Main circuit	General	(1) Check with megger (across main circuit terminals and ground terminal). (2) Check for loose screws and bolts. (3) Check for overheating of each part. (4) Clean.		○ ○ ○	○	(1) Disconnect all cables from inverter and measure across terminals R, S, T, U, V, W <L_1, L_2, L_3, U, V, W>, and ground terminal with megger. (2) Re-tighten. (3) Visual check.	(1) 5M Ω or more. (2), (3) No fault.	500VDC class megger
	Conductors, cables	(1) Check conductors for distortion. (2) Check cable sheaths for breakage.		○ ○		(1), (2) Visual check.	(1), (2) No fault.	
	Terminal block	Check for damage.		○		Visual check.	No fault	

Daily and Periodic Inspection

Area of Inspec-tion	Inspection Item	Description	Interval			Method	Crlterlon	Instrument
			Daily	Periodic 1 year	Periodic 2 years			
Main circuit	Inverter module, Converter module	Check resistance across terminals.			○	Disconnect cables from inverter and measure across terminals R, S, T, P, N and U, V, W, P, N <L_1, L_2, L_3, +, -, and U, V, W, +, -> with tester range of 100Ω.	(See the following pages)	Analog tester
	Smoothing capacitor	(1) Check for liquid leakage. (2) Check for safety valve projection and bulge. (3) Measure electrostatic capacity.	○ ○	○		(1), (2) Visual check. (3) Measure with capacity meter.	(1), (2) No fault. (3) 70% or more of rated capacity.	Capacity meter
	Relay	(1) Check for chatter during operation. (2) Check for rough surface on contacts.		○ ○		(1) Auditory check. (2) Visual check.	(1) No fault. (2) No fault.	
	Resistor	(1) Check for crack in resistor insulation. (2) Check for open cable.		○ ○		(1) Visual check. Cement resistor, wire-wound resistor. (2) Disconnect one end and measure with tester.	(1) No fault. (2) Error should be within ±10% of indicated resistance value.	Tester, digital multimeter
Control circuit Protec-tive circuit	Operation check	(1) Check balance of output voltages across phases with inverter operated independently. (2) Perform sequence protective operation test to make sure of no fault in protective and display circuits.		○ ○		(1) Measure voltage across inverter output terminals U-V-W. (2) Simulatively connect or disconnect inverter protective circuit output terminals.	(1) Phase-to-phase voltage balance within 8V for 400V. (2) Fault must occur because of sequence.	Digital multimeter, rectifier type voltmeter
Cooling system	Cooling fan	(1) Check for unusual vibration and noise. (2) Check for loose connection.	○	○		(1) Turn by hand with power off. (2) Re-tighten	(1) Smooth rotation. (2) No fault.	
	Cooling fan power supply	Is the power supply's output voltage correct?		○		Measure with a tester.	24V±2.4V	Tester
Display	Display	(1) Check if LED lamp is blown. (2) Clean.	○	○		(1) Light indicator lamps on panel. (2) Clean with rag.	(1) Check that lamps are lit.	
	Meter	Check that reading is normal.	○			Check reading of meters on panel.	Must satisfy specified and management values.	Voltmeter, ammeter, etc.
Motor	General	(1) Check for unusual vibration and noise. (2) Check for unusual odor.	○ ○			(1) Auditory, sensory, visual checks. (2) Check for unusual odor due to overheating, damage, etc.	(1), (2) No fault.	
	Insulation resistance	(1) Check with megger (across terminals and ground terminal).			○	(1) Disconnect cables from U, V, W, including motor cables.	(1) 5M Ω or more	500V megger

● Checking the inverter and converter modules

<Preparation>

(1) Disconnect the external power supply cables (R, S, T) <L_1, L_2, L_3> and motor cables (U, V, W).
(2) Prepare a tester. (Use 100Ω range.)

<Checking method>

Change the polarity of the tester alternately at the inverter terminals R, S, T, U, V, W, P and N <L_1, L_2, L_3, U, V, W, + and ->, and check for continuity.

> Note: 1. Before measurement, check that the smoothing capacitor is discharged.
> 2. At the time of continuity, the measured value is several to several ten's-of ohms depending on the module type, circuit tester type, etc. If all measured values are almost the same, the modules are without fault.

<Module device numbers and terminals to be checked>

		Tester Polarity		Measured Value		Tester Polarity		Measured Value
		⊕	⊖			⊕	⊖	
Converter module	D1	R<L_1>	P<+>	Discontinuity	D4	R<L_1>	N<->	Continuity
		P<+>	R<L_1>	Continuity		N<->	R<L_1>	Discontinuity
	D2	S<L_2>	P<+>	Discontinuity	D5	S<L_2>	N<->	Continuity
		P<+>	S<L_2>	Continuity		N<->	S<L_2>	Discontinuity
	D3	T<L_3>	P<+>	Discontinuity	D6	T<L_3>	N<->	Continuity
		P<+>	T<L_3>	Continuity		N<->	T<L_3>	Discontinuity
Inverter module	TR1	U	P<+>	Discontinuity	TR4	U	N<->	Continuity
		P<+>	U	Continuity		N<->	U	Discontinuity
	TR3	V	P<+>	Discontinuity	TR6	V	N<->	Continuity
		P<+>	V	Continuity		N<->	V	Discontinuity
	TR5	W	P<+>	Discontinuity	TR2	W	N<->	Continuity
		P<+>	W	Continuity		N<->	W	Discontinuity

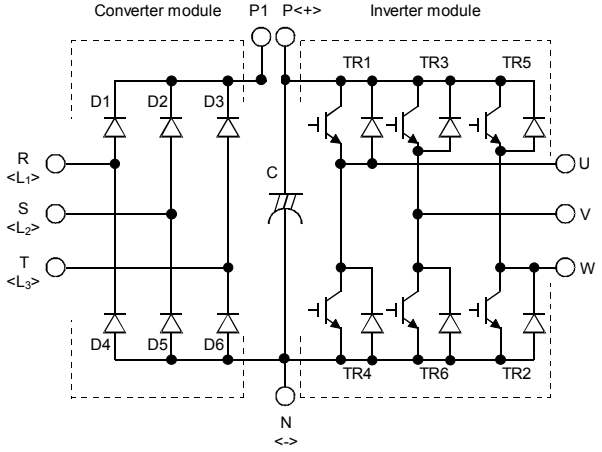

5.3.6 Replacement of parts

The inverter consists of many electronic parts such as semiconductor devices.
The following parts may deteriorate with age because of their structures or physical characteristics, leading to reduced performance or failure of the inverter. For preventive maintenance, the parts must be changed periodically.

(1) Cooling fan

The cooling fan cools heat-generating parts such as the main circuit semiconductor devices. The life of the cooling fan bearing is usually 40,000 to 50,000 hours. Hence, the cooling fan must be changed every 5 years if the inverter is run continuously. When unusual noise and/or vibration is noticed during inspection, the cooling fan must be changed immediately.

- **Removal**
  1) Turn the four knurled knobs fixing the cooling fan installation plate counterclockwise.
     (The knobs can be turned easily using a coin, etc.)
  2) Lift the installation plate and cooling fan slightly, and disconnect the fan connectors.
  3) Remove the fan with the installation plate.
  4) Remove the four screws fixing the cooling fan to the installation plate.

- **Reinstallation**
  1) After confirming the orientation of the fan, reinstall the fan so that the arrow on the left of "AIR FLOW" faces up.

  ↑ **AIR FLOW**

  <Fan side face>

  2) Connect the fan connectors
     When wiring, use care to avoid catching the wires in the fan and sandwiching in the metal sections of the cooling fan and inverter unit.
  3) Insert the cooling fan installation plate into the inverter unit, and securely fix with screws.

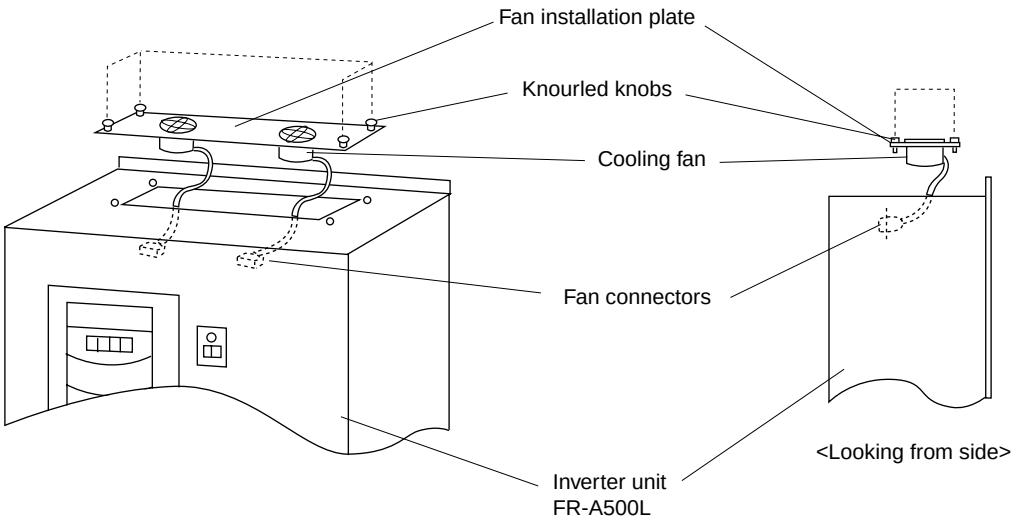

Caution: The number of cooling fans used differs according to the inverter capacity. Depending on the number of cooling fans used, they may be installed on two installation plates.

(2) Smoothing capacitors

A large-capacity aluminum electrolytic capacitor is used for smoothing the DC in the main circuit, and an aluminum electrolytic capacitor is also used for stabilizing the control power in the control circuit. Their characteristics are adversely affected by ripple current, etc. When the inverter is operated in an ordinary, air-conditioned environment, change the capacitors about every 5 years. When 5 years have elapsed, the capacitors will deteriorate more rapidly.
Check the capacitors at least every year (less than six months if their life will be expired soon).
Check the following:
1) Case (side faces and bottom face for expansion)
2) Sealing plate (for remarkable warping and extreme cracks)
3) Explosion-proof valve (for excessive valve expansion and operation)
4) Appearance, external cracks, discoloration, leakage. When the measured capacitance of the capacitor has reduced below 70% of the rating, change the capacitor.

(3) Relays

To prevent a contact fault, etc., relays must be changed according to the number of accumulative switching times (switching life).
See the following table for the inverter parts replacement guide. Lamps and other short-life parts must also be changed during periodic inspection.

Replacement Parts of the Inverter

Part Name	Standard Replacement Interval	Description
Cooling fan	5 years	Change (as required)
Smoothing capacitor in main circuit	5 years	Change (as required)
Smoothing capacitor on control board	5 years	Change the board (as required)
Smoothing capacitor on cooling fan power supply	5 years	Change the power supply (as required)
Relays	———	Change as required

(4) Spare parts

Part Name	Model	Using quantity						Remarks
		60K	80K	100K	120K	250K	375K	
Cooling fan	109L1424H504	3	3	3	3	6	8	
Smoothing capacitor	LNX2G183MSMBML	2	2	4	4	8	10	
Control board	A50CA55□	1	1	1	1	1	1	
Power board	T-PWR54□	1	1	1	1	1	1	
Power supply	LDA100B-24-QY	1	1	1	1			
Power supply	LDA150B-24-XMNSA					1		
Power supply	LDA300W-24-QT						1	

5.3.7 Measurement of main circuit voltages, currents and power

● Measurement of voltages and currents

Since the voltages and currents on the inverter power supply and output sides include harmonics, accurate measurement depends on the instruments used and circuits measured.
When instruments for commercial frequency are used for measurement, measure the following circuits using the instruments given on the next page.

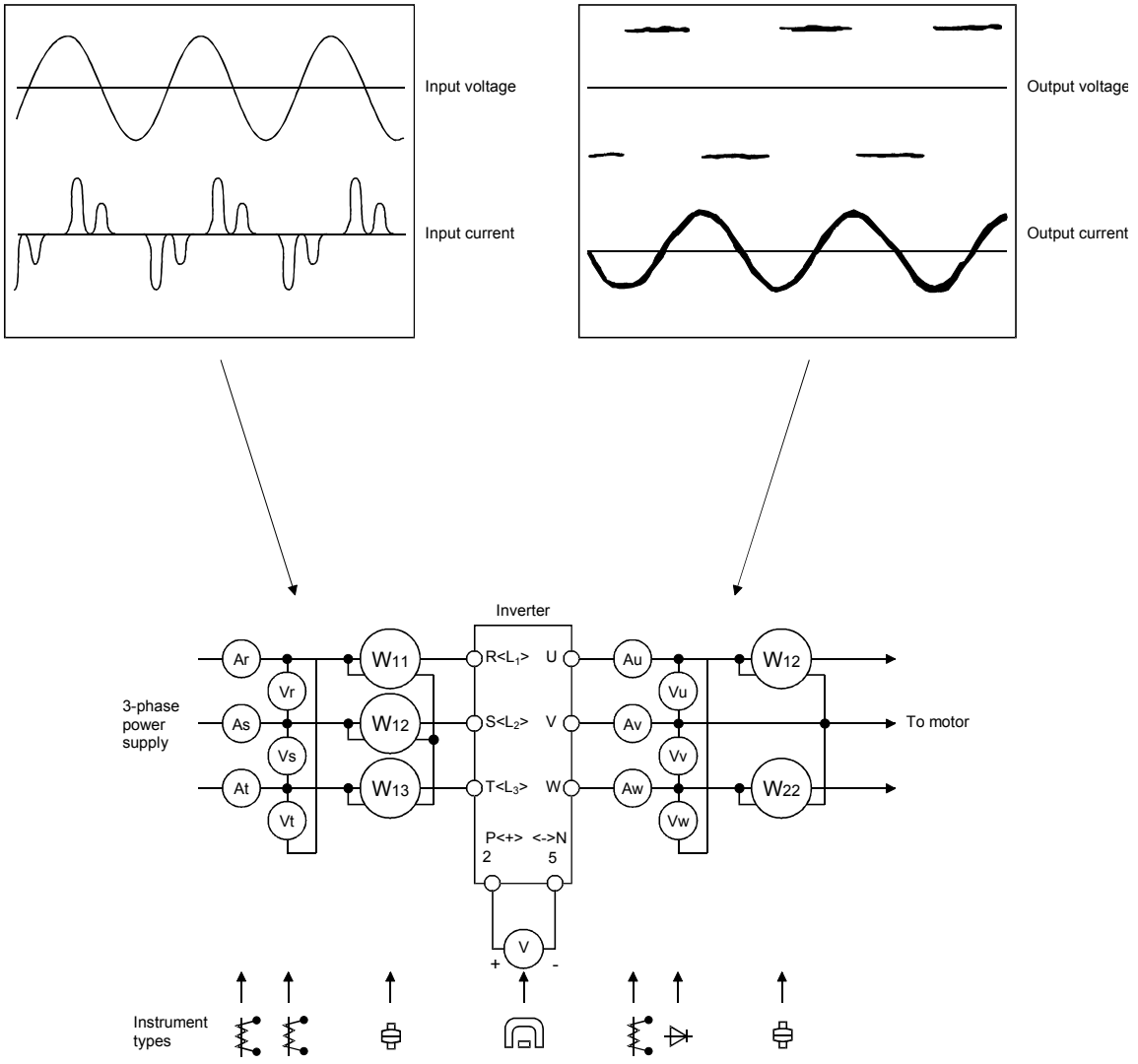

Typical Measuring Points and Instruments

Note: Use an FFT to measure the output voltage accurately. Accurate measurement cannot be made if you use a tester or general measuring instruments.

Measuring Points and Instruments

Item	Measuring Point	Measuring Instrument	Remarks (Reference Measured Value) ✳
Power supply voltage V_1	Across R-S, S-T and T-R <Across L_1-L_2, L_2-L_3 and L_3-L_1>	Moving-iron type AC voltmeter	Commercial power supply Within permissible AC voltage fluctuation（Refer to Page158）
Power supply side current I_1	R, S and T line currents <L_1, L_2, and L_3 line currents>	Moving-iron type AC ammeter	
Power supply side power P_1	At R, S and T, and across R-S, S-T and T-R <At L_1, L_2 and L_3, and across L_1-L_2, L_2-L_3 and L_3-L_1>	Electrodynamic type single-phase wattmeter	$P_1 = W_{11} + W_{12} + W_{13}$ (3-wattmeter method)
Power supply side power factor Pf_1	Calculate after measuring power supply voltage, power supply side current and power supply side power. $Pf_1 = \frac{P_1}{\sqrt{3}\, V_1 \cdot I_1} \times 100\%$		
Output side voltage V_2	Across U-V, V-Wand W-U	Rectifier type AC voltmeter (Note 1) (Not moving-iron type)	Difference between phases is within ±1% of maximum output voltage.
Output side current I_2	U, V and W line currents	Moving-iron type AC ammeter	Current should be equal to or less than rated inverter current. Difference between phases is 10% or lower.
Output side power P_2	At U, V and W, and across U-V and V-W	Electrodynamic type single-phase wattmeter	$P_2 = W_{21} + W_{22}$ 2-wattmeter method (or 3-wattmeter method)
Output side power factor Pf_2	Calculate in similar manner to power supply side power factor. $Pf_2 = \frac{P_2}{\sqrt{3}\, V_2 \cdot I_2} \times 100\%$		
Converter output	Across P-N< Across + and - >	Moving-coil type (such as tester)	POWER lamp lit $1.35 \times V_1$ Maximum 760V during regenerative operation
Frequency setting signal	Across 2 (+) –5	Moving-coil type (Tester, etc. may be used) (Internal resistance: 50kΩ or larger)	0 to 5V/0 to 10VDC; "5" is common.
	Across 1 (+) –5		0 to ±5V/0 to ±10VDC; "5" is common.
	Across 4 (+) –5		4 to 20mADC; "5" is common.
Frequency setting power supply	Across 10 (+) –5		5VDC; "5" is common.
	Across 10E (+) –5		10VDC; "5" is common.
Frequency meter signal	Across FM (+) –SD		Approximately. 5VDC at maximum frequency (without frequency meter) 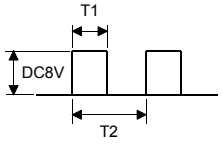 Pulse width T1: Adjusted by Pr.900 Pulse cycle T2: Set by Pr.55 (Valid for frequency monitoring only); SD is common.
	Across AM (+) –5		Approximately 10DVC at maximum frequency (without frequency meter); SD is common.
Start signal Select signal	Across STF, STR, RH, RM, RL, JOG, RT, AU, STOP, CS (+) –SD		20 to 30VDC when open. ON voltage: 1V or less; SD is common.
Reset	Across RES (+) –SD		20 to 30VDC when open. ON voltage: 1V or less; SD is common.
Output stop	Across MRS (+) –SD		20 to 30VDC when open. ON voltage: 1V or less; SD is common.
Alarm signal	Across A-C Across B-C	Moving-coil type (such as tester)	Continuity check (Note 2) <At OFF> <At ON> Across A-C: Discontinuity Continuity Across B-C: Continuity Discontinuity

Note 1. Accurate data will not be obtained by a tester.
2. When Pr. 195 "A, B, C terminal function selection" setting is positive logic.

CHAPTER 6
SPECIFICATIONS

This chapter provides the "specifications" of this product.
Always read the instructions before using the equipment.

6.1 Standard Specifications ····· 173

6.1.1 Model specifications

Model FR-A540L-□□			S60	S80	S100	S120	S132	S160	S220	S250	S280	S375
Applicable motor capacity (kW) (Note 1)		Constant torque	60	80	100	120	132	160	220	250	280	375
Output	Rated current (A)	Constant torque	122	170	200	240	260	304	415	480	547	690
Output	Overload capacity (Note 2)	Constant torque	150% 60 sec (inverse-time characteristics)S									
Output	Voltage (Note 3)		Three phase, 380V to 480V 50／60Hz									
Power supply	Rated input AC voltage, frequency		Three phase, 380V to 480V 50／60Hz									
Power supply	Tolerable AC voltage fluctuation		323 to 528V 50／60Hz									
Power supply	Tolerable frequency fluctuation		±5%									
Power supply	Power facility capacity (kVA) (Note 4)	Variable torque	93	130	152	183	198	231	316	366	416	526
Protective structure (JEM 1030)			Open type (IP00)									
Cooling method			Forced air cooling									
Approx. mass (kg (lb))			47(103)	47(103)	75(165)	75(165)	66(146)	68(150)	120(264)	220(485)	220(484)	235(518)

Note: 1. The applicable motor capacity indicated is the maximum capacity applicable when Mitsubishi 4-pole standard motor is used For A540L.
2. The overload capacity indicated in % is the ratio of the overload current to the inverter's rated current. For repeated duty, allow time for the inverter and motor to return to or below the temperatures under 100% load.
3. The maximum output voltage cannot exceed the power supply voltage. The maximum output voltage may be set as desired below the power supply voltage.
4. The power supply capacity changes with the values of the power supply side inverter impedances (including those of the input reactor and cables).

6.1.2 Common specifications

Control specifications	Control system		Soft-PWM control/high carrier frequency PWM control (V/F control or advanced magnetic flux vector control can be selected)
	Output frequency range		0.2 to 400Hz
	Frequency setting resolution	Analog input	0.015Hz/60Hz (terminal 2 input: 12 bits/0 to 10V, 11 bits/0 to 5V, terminal 1 input: 12 bits/–10 to +10V, 11 bits/–5 to +5V)
		Digital input	0.01Hz
	Frequency accuracy		Within ±0.2% of maximum output frequency (25°C ±10°C) for analog input, within 0.01% of set output frequency for digital input
	Voltage/frequency characteristic		Base frequency set as required between 0 and 400Hz. Constant torque or variable torque pattern can be selected.
	Starting torque		150%: At 0.5Hz (for advanced magnetic flux vector control)
	Torque boost		Manual torque boost
	Acceleration/deceleration time setting		0 to 3600 sec (acceleration and deceleration can be set individually), linear or S-pattern acceleration/deceleration mode can be selected.
	DC dynamic brake		Operation frequency (0 to 120Hz), operation time (0 to 10 sec), voltage (0 to 30%) variable
	Stall prevention operation level		Operation current level can be set (0 to 200% variable), presence or absence can be selected.
Operational specifications	Frequency setting signal	Analog input	0 to 5VDC, 0 to 10VDC, 0 to ±10VDC, 4 to 20mADC
		Digital input	3-digit BCD or 12-bit binary using operation panel or parameter unit (when the FR-A5AX option is used)
	Start signal		Forward and reverse rotation, start signal automatic self-holding input (3-wire input) can be selected.
	Input signals	Multi-speed selection	Up to 15 speeds can be selected. (Each speed can be selected in the range of 0 to 400Hz. The operation speed can be changed from the operation panel or parameter unit during operation.)
		Second, third acceleration/ deceleration time selection	0 to 3600 sec (up to three different accelerations and decelerations can be set individually.)
		Jog operation selection	Provided with jog operation mode select terminal (Note 1)
		Current input selection	Input of frequency setting signal 4 to 20mADC (terminal 4) is selected.
		Output stop	Instantaneous shut-off of inverter output (frequency, voltage)
		Alarm reset	Alarm retained at the activation of protective function is reset.
	Operation functions		Maximum/minimum frequency setting, frequency jump operation, external thermal relay input selection, polarity reversible operation, automatic restart operation after instantaneous power failure, commercial power supply-inverter switch-over operation, forward/reverse rotation prevention, slip compensation, operation mode selection, offline auto tuning function, online auto tuning function, PID control, programmed operation, computer link operation (RS-485)
	Output signals	Operating status	5 different signals can be selected from inverter running, up to frequency, instantaneous power failure (undervoltage), frequency detection, second frequency detection, third frequency detection, during program mode operation, during PU operation, overload alarm, regenerative brake pre-alarm, electronic overcurrent protection pre-alarm, zero current detection, output current detection, PID lower limit, PID upper limit, PID forward/reverse rotation, commercial power supply-inverter switch-over MC1, 2, 3, operation ready, brake release request, fan fault and fin overheat pre-alarm minor fault. Open collector output.
		Alarm (inverter trip)	Contact output...change-over contact (230VAC 0.3A, 30VDC 0.3A) Open collector...alarm code (4 bit) output
		For meter	1 signal can be selected from output frequency, motor current (steady or peak value), output voltage, frequency setting, running speed, motor torque, converter output voltage (steady or peak value), regenerative brake duty, electronic overcurrent protection load factor, input power, output power, load meter, and motor exciting current. Pulse train output (1440 pulses/sec./full scale) and analog output (0 to 10VDC).
Display	Display on operation panel FR-DUO4 or parameter unit FR-PU04	Operating status	Selection can be made from output frequency, motor current (steady or peak value), output voltage, frequency setting, running speed, motor torque, converter output voltage (steady or peak value), electronic overcurrent protection load factor, input power, output power, load meter, motor exciting current, cumulative energization time, actual operation time, watt-hour meter, regenerative brake duty and motor load factor.
		Alarm definition	Alarm definition is displayed when protective function is activated. 8 alarm definitions are stored. (Four alarm definitions are only displayed on the operation panel.)
	Additional display on parameter unit (FR-PU04) only	Operating status	Input terminal signal states, output terminal signal states, option fitting status, terminal assignment status
		Alarm definition	Output voltage/current/frequency/cumulative energization time immediately before protective function is activated
		Interactive guidance	Operation guide and troubleshooting by help function

Protective/alarm functions		Overcurrent shut-off (during acceleration deceleration, constant speed) regenerative overvoltage shut-off, undervoltage, instantaneous power failure, overload shut-off (electronic overcurrent protection), ground fault overcurrent, stall prevention, overload warning, fin overheat, option error, parameter error, PU disconnection, No. of retries over, output open phase, CPU error, 24VDC power supply output short circuit, operation panel power supply short circuit, main circuit error
Environment	Ambient temperature	−10°C to +40°C (14°F to +104°F) (non-freezing)
	Ambient humidity	90%RH or less (non-condensing)
	Storage temperature (3)	−20°C to +65°C
	Ambience	Indoors. (No corrosive and flammable gases, oil mist, dust and dirt.)
	Altitude, vibration	Max. 1000m (3280.80 feet) above sea level, 5.9m/s^2 {0.6G} or less (conforms to JIS C 0911)

Note: 1. Jog operation may also be performed from the operation panel or parameter unit.
2. Temperature applicable for a short period in transit, etc.

6.1.3 Outline drawings

● FR-A540L-S60K, S80K, S100K, S120K,S132K, S160K

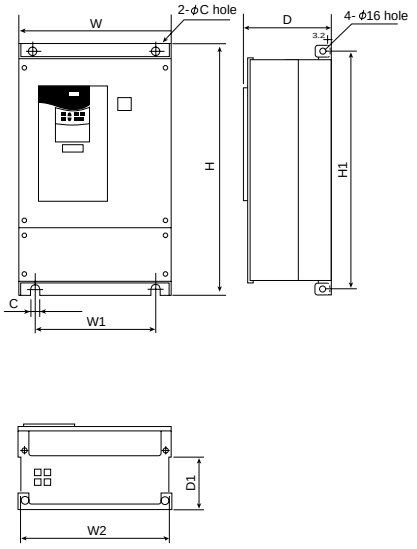

Inverter Type	W	W1	W2	H	H1	D	D1	C
FR-A540L-S60K FR-A540L-S80K	360 (14.17)	260 (10.24)	336 (13.23)	610 (24.02)	584 (22.99)	360 (14.17)	160 (6.30)	10 (0.39)
FR-A540L-S100K FR-A540L-S120K FR-A540L-S132K FR-A540L-S160K	480 (18.90)	400 (15.75)	456 (17.95)	740 (29.13)	714 (28.11)	360 (14.17)	160 (6.30)	10 (0.39)

（Unit：mm(inches)）

● Accessory DC reactor

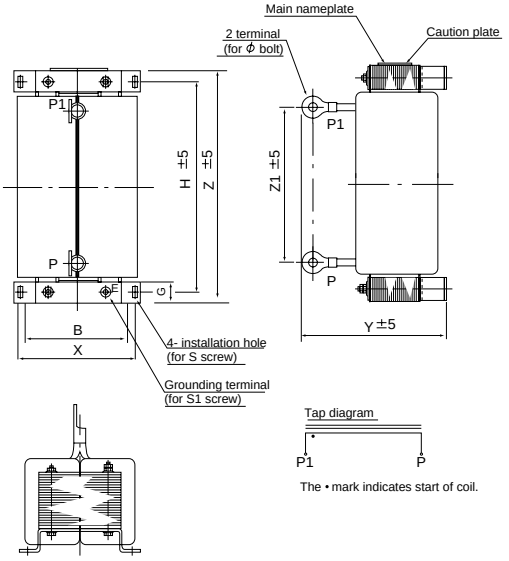

Inverter Type	Outline drawing										Mass (kg(lbs))
	X	Y	Z	Z1	B	H	G	S	S1	ϕ	
FR-A540L-S60K	140 (5.51)	170 (6.69)	320 (12.60)	230 (9.06)	120 (4.72)	295 (11.61)	25 (0.98)	M6	M6	M10	14 (30.8)
FR-A540L-S80K	150 (5.91)	175 (6.89)	337 (13.27)	265 (10.4)	130 (5.12)	310 (12.20)	25 (0.98)	M6	M6	M12	18 (39.6)
FR-A540L-S100K	150 (5.91)	180 (7.09)	337 (13.27)	255 (10.04)	130 (5.12)	310 (12.20)	25 (0.98)	M6	M6	M12	19 (41.89)
FR-A540L-S120K	175 (6.89)	185 (7.28)	400 (15.75)	300 (11.81)	150 (5.91)	365 (14.37)	32 (1.26)	M8	M6	M12	22 (48.4)
FR-A540L-S132K	175 (6.89)	185 (7.28)	400 (15.75)	300 (11.81)	150 (5.91)	365 (14.37)	32 (1.26)	M8	M6	M12	22 (48.4)
FR-A540L-S160K	175 (6.89)	190 (7.48)	400 (15.75)	315 (12.4)	150 (5.91)	365 (14.37)	32 (1.26)	M8	M6	M12	22 (48.4)

（Unit：mm(inches)）

● FR-A540L-S220K,S250K, S280K,S375K

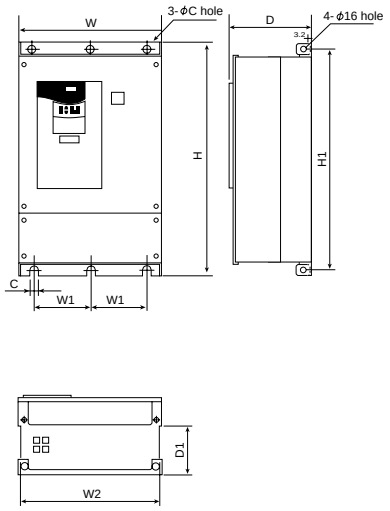

Inverter Type	W	W1	W2	H	H1	D	D1	C
FR-A540L-S220K	498 (19.61)	200 (7.87)	474 (18.66)	1010 (39.76)	984 (38.74)	380 (14.96)	185 (7.28)	10 (0.39)
FR-A540L-S250K 〃 -S280K	680 (26.77)	300 (11.81)	656 (25.83)	1010 (39.76)	984 (38.74)	380 (14.96)	185 (7.28)	10 (0.39)
FR-A540L-S375K	790 (31.10)	315 (12.40)	766 (30.16)	1330 (52.36)	1300 (51.18)	440 (17.32)	196 (7.72)	12 (0.47)

(Unit：mm(inches))

● Accessory DC reactor

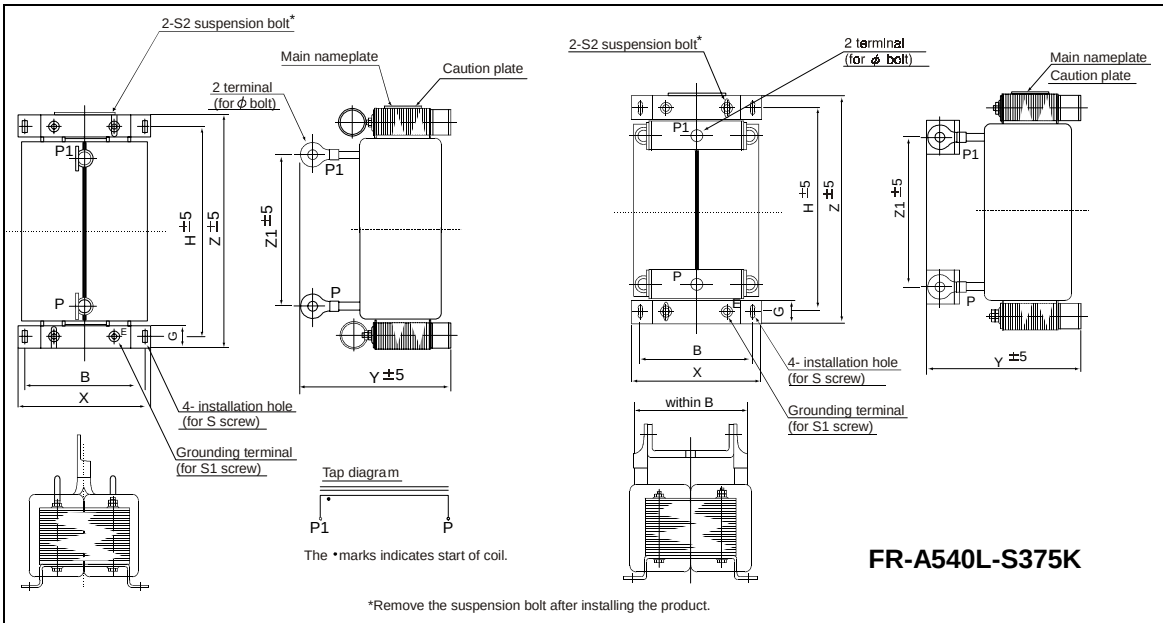

*Remove the suspension bolt after installing the product.

Inverter Type	Outline drawing											Mass (kg(lbs))
	X	Y	Z	Z1	B	H	G	S	S1	S2	ϕ	
FR-A540L-S220K	190 (7.48)	225 (8.86)	438 (17.24)	305 (12.01)	165 (6.50)	400 (15.75)	38 (1.5)	M8	M8	M8	M12	36 (80)
FR-A540L-S250K 〃 -S280K	210 (8.27)	235 (9.25)	495 (19.49)	350 (13.78)	185 (7.28)	450 (17.72)	44 (1.73)	M10	M8	M8	M16	48 (105.82)
FR-A540L-S375K	220 (8.66)	250 (9.84)	495 (19.49)	380 (14.96)	195 (7.68)	450 (17.72)	44 (1.73)	M10	M8	M8	M16	57 (125.66)

(Unit：mm(inches))

■Operation panel FR-DU04

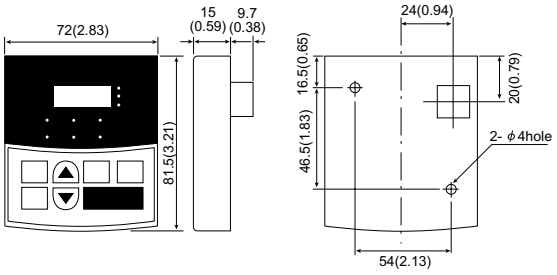

●Panel cut diagram

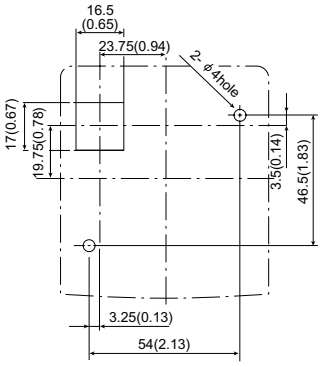

■Parameter unit(option) FR-PU04

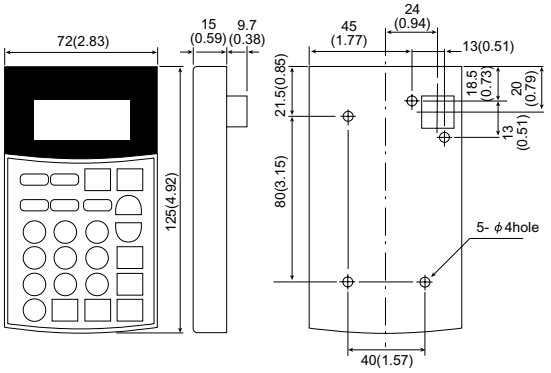

●Panel cut diagram

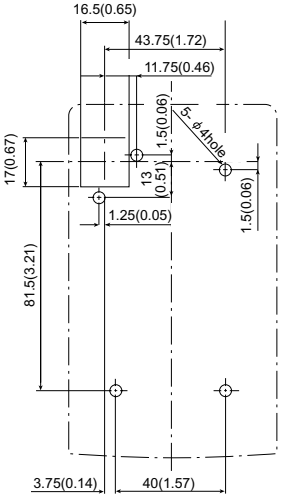

PU connector pin layout
(Looking from front of inverter unit "receptacle side")

(Unit : mm(inches))

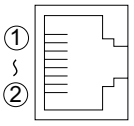

① SG	⑤ SDA
② P5S	⑥ RDB
③ RDA	⑦ SG
④ SDB	⑧ P5S

Note) 1. Do not connect to the computer's LAN board, FAX modem socket or telephone modular connector. The electrical specifications differ, so the product could be damaged if connected.

2. The No.2 and 8 pins (P5S) are the power supply for the parameter unit. Do not use these when carrying out RS-485 communication.

APPENDICES

This chapter provides the "appendices" for use of this product.
Always read the instructions before using the equipment.

Appendix 1 Data Code List ····· 179
Appendix 2 List of Parameters Classified by Purpose of Use ····· 185

Appendix 1 Data Code List

Func-tion	Parameter Number	Name	Data Codes		
			Read	Write	Link Parameter Extension Setting (Data code 7F)
Basic functions	0	Torque boost	00	80	0
	1	Maximum frequency	01	81	0
	2	Minimum frequency	02	82	0
	3	Base frequency	03	83	0
	4	Multi-speed setting (high speed)	04	84	0
	5	Multi-speed setting (middle speed)	05	85	0
	6	Multi-speed setting (low speed)	06	86	0
	7	Acceleration time	07	87	0
	8	Deceleration time	08	88	0
	9	Electronic thermal O/L relay	09	89	0
Standard operation functions	10	DC injection brake operation frequency	0A	8A	0
	11	DC injection brake operation time	0B	8B	0
	12	DC injection brake voltage	0C	8C	0
	13	Starting frequency	0D	8D	0
	14	Load pattern selection	0E	8E	0
	15	Jog frequency	0F	8F	0
	16	Jog acceleration/deceleration time	10	90	0
	17	MRS input selection	11	91	0
	18	High-speed maximum frequency	12	92	0
	19	Base frequency voltage	13	93	0
	20	Acceleration/deceleration reference frequency	14	94	0
	21	Acceleration/deceleration time increments	15	95	0
	22	Stall prevention operation level	16	96	0
	23	Stall prevention operation level at double speed	17	97	0
	24	Multi-speed setting (speed 4)	18	98	0
	25	Multi-speed setting (speed 5)	19	99	0
	26	Multi-speed setting (speed 6)	1A	9A	0
	27	Multi-speed setting (speed 7)	1B	9B	0
	28	Multi-speed input compensation	1C	9C	0
	29	Acceleration/deceleration pattern	1D	9D	0
	30	Regenerative function selection	1E	9E	0
	31	Frequency jump 1A	1F	9F	0
	32	Frequency jump 1B	20	A0	0
	33	Frequency jump 2A	21	A1	0
	34	Frequency jump 2B	22	A2	0
	35	Frequency jump 3A	23	A3	0
	36	Frequency jump 3B	24	A4	0
	37	Speed display	25	A5	0
Output terminal functions	41	Up-to-frequency sensitivity	29	A9	0
	42	Output frequency detection	2A	AA	0
	43	Output frequency detection for reverse rotation	2B	AB	0
Second functions	44	Second acceleration/deceleration time	2C	AC	0
	45	Second deceleration time	2D	AD	0
	46	Second torque boost	2E	AE	0
	47	Second V/F (base frequency)	2F	AF	0
	48	Second stall prevention operation current	30	B0	0
	49	Second stall prevention operation frequency	31	B1	0
	50	Second output frequency detection	32	B2	0
Display functions	52	DU/PU main display data selection	34	B4	0
	53	PU level display data selection	35	B5	0
	54	FM terminal function selection	36	B6	0
	55	Frequency monitoring reference	37	B7	0
	56	Current monitoring reference	38	B8	0
Rated output current	57	Automatic restart functions	39	B9	0
	58	Restart coasting time	3A	BA	0

Func-tion	Parameter Number	Name	Data Codes		
			Read	Write	Link Parameter Extension Setting (Data code 7F)
Additional function	59	Remote setting function selection	3B	BB	0
Operation selection functions	60	Intelligent mode selection	3C	BC	0
	61	Reference current	3D	BD	0
	62	Reference current for acceleration	3E	BE	0
	63	Reference current for deceleration	3F	BF	0
	64	Starting frequency for elevator mode	40	C0	0
	65	Retry selection	41	C1	0
	66	Stall prevention operation level reduction starting frequency	42	C2	0
	67	Number of retries at alarm occurrence	43	C3	0
	68	Retry waiting time	44	C4	0
	69	Retry count display erasure	45	C5	0
	70	Special regenerative brake duty	46	C6	0
	71	Applied motor	47	C7	0
	72	PWM frequency selection	48	C8	0
	73	0-5V/0-10V selection	49	C9	0
	74	Filter time constant	4A	CA	0
	75	Reset selection/disconnected PU detection/PU stop selection	4B	CB	0
	76	Alarm code output selection	4C	CC	0
	77	Parameter write disable selection	4D	None	0
	78	Reverse rotation prevention selection	4E	CE	0
	79	Operation mode selection	4F	None	0
Motor constants	80	Motor capacity	50	D0	0
	81	Number of motor poles	51	D1	0
	82	Motor exciting current	52	D2	0
	83	Rated motor voltage	53	D3	0
	84	Rated motor frequency	54	D4	0
	89	Speed control gain	59	D9	0
	90	Motor constant (R1)	5A	DA	0
	91	Motor constant (R2)	5B	DB	0
	92	Motor constant (L1)	5C	DC	0
	93	Motor constant (L2)	5D	DD	0
	94	Motor constant (X)	5E	DE	0
	95	Online auto tuning selection	5F	DF	0
	96	Auto tuning setting/status	60	E0	0
5-point flexible V/F characteristics	100	V/F1 (first frequency)	00	80	1
	101	V/F1 (first frequency voltage)	01	81	1
	102	V/F2 (second frequency)	02	82	1
	103	V/F2 (second frequency voltage)	03	83	1
	104	V/F3 (third frequency)	04	84	1
	105	V/F3 (third frequency voltage)	05	85	1
	106	V/F4 (fourth frequency)	06	86	1
	107	V/F4 (fourth frequency voltage)	07	87	1
	108	V/F5 (fifth frequency)	08	88	1
	109	V/F5 (fifth frequency voltage)	09	89	1
Third functions	110	Third acceleration/deceleration time	0A	8A	1
	111	Third deceleration time	0B	8B	1
	112	Third torque boost	0C	8C	1
	113	Third V/F (base frequency)	0D	8D	1
	114	Third stall prevention operation current	0E	8E	1
	115	Third stall prevention operation frequency	0F	8F	1
	116	Third output frequency detection	10	90	1

Func-tion	Parameter Number	Name	Data Codes		
			Read	Write	Link Parameter Extension Setting (Data code 7F)
Communication functions	117	Station number	11	None	1
	118	Communication speed	12	None	1
	119	Stop bit length/data length	13	None	1
	120	Parity check presence/absence	14	None	1
	121	Number of communication retries	15	None	1
	122	Communication check time interval	16	None	1
	123	Waiting time setting	17	None	1
	124	CR, LF presence/absence selection	18	None	1
PID control	128	PID action selection	1C	9C	1
	129	PID proportional band	1D	9D	1
	130	PID integral time	1E	9E	1
	131	Upper limit	1F	9F	1
	132	Lower limit	20	A0	1
	133	PID action set point for PU operation	21	A1	1
	134	PID differential time	22	A2	1
Commercial power supply-inverter switch-over	135	Commercial power supply-inverter switch-over sequence output terminal selection	23	A3	1
	136	MC switch-over interlock time	24	A4	1
	137	Start waiting time	25	A5	1
	138	Commercial power supply-inverter switch-over selection at alarm occurrence	26	A6	1
	139	Automatic inverter-commercial power supply switch-over frequency	27	A7	1
Backlash	140	Backlash acceleration stopping frequency	28	A8	1
	141	Backlash acceleration stopping time	29	A9	1
	142	Backlash deceleration stopping frequency	2A	AA	1
	143	Backlash deceleration stopping time	2B	AB	1
Dis-play	144	Speed setting switch-over	2C	AC	1
	145	Parameter unit language switch-over			
Addit-ional functions	148	Stall prevention level at 0V input	30	B0	1
	149	Stall prevention level at 10V input	31	B1	1
Current detection	150	Output current detection level	32	B2	1
	151	Output current detection period	33	B3	1
	152	Zero current detection level	34	B4	1
	153	Zero current detection period	35	B5	1
Sub functions	154	Voltage reduction selection during stall prevention operation	36	B6	1
	155	RT activated condition	37	B7	1
	156	Stall prevention operation selection	38	B8	1
	157	OL signal waiting time	39	B9	1
	158	AM terminal function selection	3A	BA	1
Additional function	160	User group read selection	00	80	2
Restart after instantaneous power failure	162	Automatic restart after instantaneous power failure selection	02	82	2
	163	First cushion time for restart	03	83	2
	164	First cushion voltage for restart	04	84	2
	165	Restart stall prevention operation level	05	85	2
Initial monitor	170	Watt-hour meter clear	0A	8A	2
	171	Actual operation hour meter clear	0B	8B	2
User functions	173	User group 1 registration	0D	8D	2
	174	User group 1 deletion	0E	8E	2
	175	User group 2 registration	0F	8F	2
	176	User group 2 deletion	10	90	2

Func-tion	Parameter Number	Name	Data Codes		
			Read	Write	Link Parameter Extension Setting (Data code 7F)
Terminal assignment functions	180	RL terminal function selection	14	94	2
	181	RM terminal function selection	15	95	2
	182	RH terminal function selection	16	96	2
	183	RT terminal function selection	17	97	2
	184	AU terminal function selection	18	98	2
	185	JOG terminal function selection	19	99	2
	186	CS terminal function selection	1A	9A	2
	190	RUN terminal function selection	1E	9E	2
	191	SU terminal function selection	1F	9F	2
	192	IPF terminal function selection	20	A0	2
	193	OL terminal function selection	21	A1	2
	194	FU terminal function selection	22	A2	2
	195	ABC terminal function selection	23	A3	2
Additional function	199	User's initial value setting	27	A7	2
Programmed operation	200	Programmed operation minute/second selection	3C	BC	1
	201	Program setting 1	3D	BD	1
	202	Program setting 1	3F	BE	1
	203	Program setting 1	3F	BF	1
	204	Program setting 1	40	C1	1
	205	Program setting 1	41	C1	1
	206	Program setting 1	42	C2	1
	207	Program setting 1	43	C3	1
	208	Program setting 1	44	C4	1
	209	Program setting 1	45	C5	1
	210	Program setting 1	46	C6	1
	211	Program setting 2	47	C7	1
	212	Program setting 2	48	C8	1
	213	Program setting 2	49	C9	1
	214	Program setting 2	4A	CA	1
	215	Program setting 2	4B	CB	1
	216	Program setting 2	4C	CC	1
	217	Program setting 2	4D	CD	1
	218	Program setting 2	4E	CE	1
	219	Program setting 2	4F	CF	1
	220	Program setting 2	50	D0	1
	221	Program setting 3	51	D1	1
	222	Program setting 3	52	D2	1
	223	Program setting 3	53	D3	1
	224	Program setting 3	54	D4	1
	225	Program setting 3	55	D5	1
	226	Program setting 3	56	D6	1
	227	Program setting 3	57	D7	1
	228	Program setting 3	58	D8	1
	229	Program setting 3	59	D9	1
	230	Program setting 3	5A	DA	1
	231	Timer setting	5B	DB	1
Multi-speed operation	232	Multi-speed setting (speed 8)	28	A8	2
	233	Multi-speed setting (speed 9)	29	A9	2
	234	Multi-speed setting (speed 10)	2A	AA	2
	235	Multi-speed setting (speed 11)	2B	AB	2
	236	Multi-speed setting (speed 12)	2C	AC	2
	237	Multi-speed setting (speed 13)	2D	AD	2
	238	Multi-speed setting (speed 14)	2E	AE	2
	239	Multi-speed setting (speed 15)	2F	AF	2

Func-tion	Parameter Number	Name	Data Codes		
			Read	Write	Link Parameter Extension Setting (Data code 7F)
Sub functions	240	Soft-PWM setting	30	B0	2
	244	Cooling fan operation selection	34	B4	2
	250	Stop selection	3A	BA	2
	251	Output phase failure protection selection	3B	BB	2
	252	Override bias	3C	BC	2
	253	Override gain	3D	BD	2
Power failure stop functions	261	Power failure stop selection	45	C5	2
	262	Subtracted frequency at deceleration start	46	C6	2
	263	Subtraction starting frequency	47	C7	2
	264	Power-failure deceleration time 1	48	C8	2
	265	Power-failure deceleration time 2	49	C9	2
	266	Power-failure deceleration time switch-over frequency	4A	CA	2
Function selection	270	Stop-on-contact/load torque high-speed frequency control selection	53	CE	2
High speed frequency control	271	High-speed setting maximum current	45	CF	2
	272	Mid-speed setting minimum current	46	D0	2
	273	Current averaging range	47	D1	2
	274	Current averaging filter constant	48	D2	2
Stop on contact	275	Stop-on-contact exciting current low-speed multiplying factor	53	D3	2
	276	Stop-on-contact PWM carrier frequency	54	D4	2
Brake sequence functions	278	Brake opening frequency	56	D6	2
	279	Brake opening current	57	D7	2
	280	Brake opening current detection time	58	D8	2
	281	Brake operation time at start	59	D9	2
	282	Brake operation frequency	5A	DA	2
	283	Brake operation time at stop	5B	DB	2
	284	Deceleration detection function selection	5C	DC	2
	285	Overspeed detection frequency	5D	DD	2
Droop function	286	Droop gain	5E	DE	2
	287	Droop filter time constant	5F	DF	2
12-bit digital input	300	BCD code input bias	00	80	3
	301	BCD code input gain	01	81	3
	302	Binary input bias	02	82	3
	303	Binary input gain	03	83	3
	304	Selection of whether digital input and analog compensation input are enabled or disabled	04	84	3
	305	Data read timing signal on/off selection	05	85	3
Analog output, digital output	306	Analog output signal selection	06	86	3
	307	Setting for zero analog output	07	87	3
	308	Setting for maximum analog output	08	88	3
	309	Analog output signal voltage/current switch-over	09	89	3
	310	Analog meter voltage output selection	0A	8A	3
	311	Setting for zero analog meter voltage output	0B	8B	3
	312	Setting for maximum analog meter voltage output	0C	8C	3
	313	Y0 output selection	0D	8D	3
	314	Y1 output selection	0E	8E	3
	315	Y2 output selection	0F	8F	3
	316	Y3 output selection	10	90	3
	317	Y4 output selection	11	91	3
	318	Y5 output selection	12	92	3
	319	Y6 output selection	13	93	3

Func-tion	Parameter Number	Name		Data Codes		
				Read	Write	Link Parameter Extension Setting (Data code 7F)
Relay output	320	RA1 output selection		14	94	3
	321	RA2 output selection		15	95	3
	322	RA3 output selection		16	96	3
	330	RA output selection		1E	9E	3
computer link function	331	Inverter station number		1F	9F	3
	332	Communication speed		20	A0	3
	333	Stop bit length		21	A1	3
	334	Parity check yes/no		22	A2	3
	335	Communication retry count		23	A3	3
	336	Communication check time interval		24	A4	3
	337	Waiting time setting		25	A5	3
	338	Operation command right		26	A6	3
	339	Speed command right		27	A7	3
	340	Link start mode selection		28	A8	3
	341	CR, LF yes/no selection		29	A9	3
	342	E^2PROM write yes/no		2A	AA	3
Sub function	570	CT/VT selection		46	C6	5
	571	Start holding time		47	C7	5
Calibration functions	900	FM terminal calibration		5C	DC	1
	901	AM terminal calibration		5D	DD	1
	902	Frequency setting voltage bias		5E	DE	1
	903	Frequency setting voltage gain		5F	DF	1
	904	Frequency setting current bias		60	E0	1
	905	Frequency setting current gain		61	E1	1
	990	Buzzer control		5A	DA	9
	—	Second parameter switch-over		6C	EC	—
	—	Frequency setting	Running frequency (RAM)	6D	ED	—
	—		Running frequency (E^2PROM)	6E	EE	—
	—	Frequency monitor	Monitor	6F	—	—
	—		Output current monitor	70	—	—
	—		Output voltage monitor	71	—	—
	—		Special monitor	72	—	—
	—		Special monitor selection No.	73	F3	—
	—	Alarm display	Most recent No. 1, No. 2/alarm display clear	74	F4	—
	—		Most recent No. 3, No. 4	75	—	—
	—		Most recent No. 5, No. 6	76	—	—
	—		Most recent No. 7, No. 8	77	—	—
	—	Inverter status monitor/run command		7A	FA	—
	—	Operation mode acquisition		7B	FB	—
	—	All clear		—	FC	—
	—	Inverter reset		—	FD	—
	—	Link parameter extension setting		7F	FF	—

Appendix 2 List of Parameters Classified by Purposes of Use

Set the parameters according to the operating conditions. The following list indicates purposes of use and parameters. (For full information on the parameters, Refer to Chapter 4.)

Purpose of Use	Parameter Numbers
	Parameter numbers which must be set
Adjustment of acceleration/deceleration time and pattern	Pr. 7, Pr. 8, Pr. 20, Pr. 21
Motor overheat protection	Pr. 9
Selection of optimum output characteristic for load characteristic	Pr. 3
Limit of output frequency	Pr. 1, Pr. 2, Pr. 18
Operation over 60Hz	Pr. 903, Pr. 905
Adjustment of frequency setting signal and output	Pr. 73, Pr. 902, Pr. 903, Pr. 904, Pr. 905
Calibration of frequency meter	Pr. 54, Pr. 55, Pr. 56, Pr. 158, Pr. 900
Adjustment of digital frequency meter	Pr. 54, Pr. 55, Pr. 56, Pr. 900
Adjustment of motor output torque	Pr. 0, Pr. 80, Pr. 81
Multi-speed operation	Pr. 4, Pr. 5, Pr. 6, Pr. 24, Pr. 25, Pr. 26, Pr. 27, Pr. 232, Pr. 234, Pr. 235, Pr. 236, Pr. 237, Pr. 238, Pr. 239
Jog operation	Pr. 15, Pr. 16
Frequency jump operation	Pr. 31, Pr. 32, Pr. 33, Pr. 34, Pr. 35, Pr. 36
Reversible operation according to analog signal polarity	Pr. 28, Pr. 73
Automatic restart after instantaneous power failure	Pr. 57, Pr. 58
Adjustment of brake operation	Pr. 10, Pr. 11, Pr. 12
Timing of magnetic brake operation	Pr. 42
Display of speed, etc.	Pr. 37, Pr. 52, Pr. 53
Function rewrite prevention	Pr. 77
Reverse rotation prevention	Pr. 78
Optimum acceleration/deceleration within continuous rating range	Pr. 60
Energy-saving operation	Pr. 60
Automatic restart after alarm stop	Pr. 65, Pr. 67, Pr. 68, Pr. 69
Sub-motor operation	Pr. 0, Pr. 3, Pr. 7, Pr. 8, Pr. 44, Pr. 45, Pr. 46, Pr. 47, Pr. 110, Pr. 111, Pr. 112, Pr. 113
To make desired output characteristics (V/F pattern)	Pr. 100 to Pr. 109
Operation via communication with personal computer	Pr. 117 to Pr. 124
Operation under PID control	Pr. 128 to Pr. 134
To perform commercial power supply-inverter switch-over operation	Pr. 135 to Pr. 139
To make backlash compensation	Pr. 140 to Pr. 143
To detect current	Pr. 150 to Pr. 153
Assignment of input terminal functions	Pr. 180 to Pr. 186
Assignment of output terminal functions	Pr. 190 to Pr. 195
To suppress noise	Pr. 72, Pr. 240
To group parameters	Pr. 160, Pr. 173 to Pr. 176
To set initial values for parameters	Pr. 199
Clearing of inverter's actual operation time	Pr. 171
High-speed frequency control operation	Pr. 271 to Pr. 274
To exercise stop-on-contact control	Pr. 275, Pr. 276
To increase cooling fan life	Pr. 244
To decelerate inverter to a stop at power failure	Pr. 261 to Pr. 266
Advanced magnetic flux vector control operation	Pr. 80, Pr. 81
Programmed operation	Pr. 200 to Pr. 231
Selection of key beep	Pr. 990

Appendix 2 List of Parameters Classified by Purposes of Use

Set the parameters according to the operating conditions. The following list indicates purposes of use and parameters. (For full information on the parameters, Refer to Chapter 4.)

Purpose of Use	Parameter Numbers
	Parameter numbers which must be set
Adjustment of acceleration/deceleration time and pattern	Pr. 7, Pr. 8, Pr. 20, Pr. 21
Motor overheat protection	Pr. 9
Selection of optimum output characteristic for load characteristic	Pr. 3
Limit of output frequency	Pr. 1, Pr. 2, Pr. 18
Operation over 60Hz	Pr. 903, Pr. 905
Adjustment of frequency setting signal and output	Pr. 73, Pr. 902, Pr. 903, Pr. 904, Pr. 905
Calibration of frequency meter	Pr. 54, Pr. 55, Pr. 56, Pr. 158, Pr. 900
Adjustment of digital frequency meter	Pr. 54, Pr. 55, Pr. 56, Pr. 900
Adjustment of motor output torque	Pr. 0, Pr. 80, Pr. 81
Multi-speed operation	Pr. 4, Pr. 5, Pr. 6, Pr. 24, Pr. 25, Pr. 26, Pr. 27, Pr. 232, Pr. 234, Pr. 235, Pr. 236, Pr. 237, Pr. 238, Pr. 239
Jog operation	Pr. 15, Pr. 16
Frequency jump operation	Pr. 31, Pr. 32, Pr. 33, Pr. 34, Pr. 35, Pr. 36
Reversible operation according to analog signal polarity	Pr. 28, Pr. 73
Automatic restart after instantaneous power failure	Pr. 57, Pr. 58
Adjustment of brake operation	Pr. 10, Pr. 11, Pr. 12
Timing of magnetic brake operation	Pr. 42
Display of speed, etc.	Pr. 37, Pr. 52, Pr. 53
Function rewrite prevention	Pr. 77
Reverse rotation prevention	Pr. 78
Optimum acceleration/deceleration within continuous rating range	Pr. 60
Energy-saving operation	Pr. 60
Automatic restart after alarm stop	Pr. 65, Pr. 67, Pr. 68, Pr. 69
Sub-motor operation	Pr. 0, Pr. 3, Pr. 7, Pr. 8, Pr. 44, Pr. 45, Pr. 46, Pr. 47, Pr. 110, Pr. 111, Pr. 112, Pr. 113
To make desired output characteristics (V/F pattern)	Pr. 100 to Pr. 109
Operation via communication with personal computer	Pr. 117 to Pr. 124
Operation under PID control	Pr. 128 to Pr. 134
To perform commercial power supply-inverter switch-over operation	Pr. 135 to Pr. 139
To make backlash compensation	Pr. 140 to Pr. 143
To detect current	Pr. 150 to Pr. 153
Assignment of input terminal functions	Pr. 180 to Pr. 186
Assignment of output terminal functions	Pr. 190 to Pr. 195
To suppress noise	Pr. 72, Pr. 240
To group parameters	Pr. 160, Pr. 173 to Pr. 176
To set initial values for parameters	Pr. 199
Clearing of inverter's actual operation time	Pr. 171
High-speed frequency control operation	Pr. 271 to Pr. 274
To exercise stop-on-contact control	Pr. 275, Pr. 276
To increase cooling fan life	Pr. 244
To decelerate inverter to a stop at power failure	Pr. 261 to Pr. 266
Advanced magnetic flux vector control operation	Pr. 80, Pr. 81
Programmed operation	Pr. 200 to Pr. 231
Selection of key beep	Pr. 990

MITSUBISHI ELECTRIC CORPORATION
HEAD OFFICE : MITSUBISHI DENKI BLDG MARUNOUCHI TOKYO 100-8310

IB-T7261-04 (200203) Printed in Japan

Specifications subject to change without notice.

ST041D(200203)長MEE