MITSUBISHI

TRANSISTORIZED INVERTER

FR-E500

INSTRUCTION MANUAL

HIGH PERFORMANCE
&
HIGH FUNCTION

FR-E520-0.1K to 7.5K-NA
FR-E540-0.4K to 7.5K-NA
FR-E510W-0.1K to 0.75K-NA

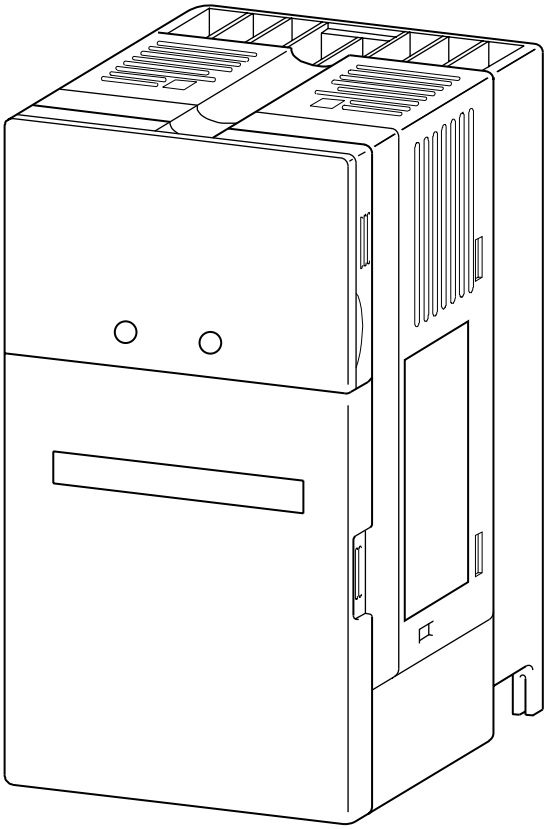

OUTLINE Chapter 1

INSTALLATION AND WIRING Chapter 2

OPERATION/ CONTROL Chapter 3

PARAMETERS Chapter 4

PROTECTIVE FUNCTIONS Chapter 5

SPECIFICATIONS Chapter 6

Thank you for choosing the Mitsubishi Transistorized inverter.

This instruction manual gives handling information and precautions for use of this equipment.

Incorrect handling might cause an unexpected fault. Before using the inverter, please read this manual carefully to use the equipment to its optimum.

Please forward this manual to the end user.

This instruction manual uses the International System of Units (SI). The measuring units in the yard and pound system are indicated in parentheses as reference values.

This section is specifically about safety matters

Do not attempt to install, operate, maintain or inspect the inverter until you have read through this instruction manual and appended documents carefully and can use the equipment correctly.

Do not use the inverter until you have a full knowledge of the equipment, safety information and instructions.

In this manual, the safety instruction levels are classified into "WARNING" and "CAUTION".

⚠ **WARNING**	Assumes that incorrect handling may cause hazardous conditions, resulting in death or severe injury.
⚠ **CAUTION**	Assumes that incorrect handling may cause hazardous conditions, resulting in medium or slight injury, or may cause physical damage only.

Note that even the CAUTION level may lead to a serious consequence according to conditions. Please follow the instructions of both levels because they are important to personnel safety.

SAFETY INSTRUCTIONS

1. Electric Shock Prevention

⚠ WARNING

- While power is on or when the inverter is running, do not open the front cover. You may get an electric shock.
- Do not run the inverter with the front cover removed. Otherwise, you may access the exposed high-voltage terminals or the charging part of the circuitry and get an electric shock.
- If power is off, do not remove the front cover except for wiring or periodic inspection. You may access the charged inverter circuits and get an electric shock.
- Before starting wiring or inspection, switch power off, wait for more than 10 minutes, and check for residual voltage with a meter (refer to chapter 2 for further details) etc.
- Earth the inverter.
- Any person who is involved in the wiring or inspection of this equipment should be fully competent to do the work.
- Always install the inverter before wiring. Otherwise, you may get an electric shock or be injured.
- Operate the switches and potentiometers with dry hands to prevent an electric shock.
- Do not subject the cables to scratches, excessive stress, heavy loads or pinching. Otherwise, you may get an electric shock.
- Do not change the cooling fan while power is on.
  It is dangerous to change the cooling fan while power is on.

2. Fire Prevention

⚠ CAUTION

- Mount the inverter and brake resistor on an incombustible surface. Installing the inverter directly on or near a combustible surface could lead to a fire.
- If the inverter has become faulty, switch off the inverter power. A continuous flow of large current could cause a fire.
- When a brake resistor is used, use an alarm signal to switch power off. Otherwise, the brake resistor will overheat abnormally due a brake transistor or other fault, resulting in a fire.
- Do not connect a resistor directly to the DC terminals P(+), N(–). This could cause a fire.

3. Injury Prevention

⚠ CAUTION

- Apply only the voltage specified in the instruction manual to each terminal to prevent damage etc.
- Ensure that the cables are connected to the correct terminals. Otherwise, damage etc. may occur.
- Always make sure that polarity is correct to prevent damage etc.
- While power is on and for some time after power-off, do not touch the inverter or brake resistor as they are hot and you may get burnt.

4. Additional instructions

Also note the following points to prevent an accidental failure, injury, electric shock, etc.

(1) Transportation and installation

⚠ CAUTION

- When carrying products, use correct lifting gear to prevent injury.
- Do not stack the inverter boxes higher than the number recommended.
- Ensure that installation position and material can withstand the weight of the inverter. Install according to the information in the Instruction Manual.
- Do not operate if the inverter is damaged or has parts missing.
- Do not hold the inverter by the front cover or operation panel; it may fall off.
- Do not stand or rest heavy objects on the inverter.
- Check the inverter mounting orientation is correct.
- Prevent screws, wire fragments or other conductive bodies or oil or other flammable substance from entering the inverter.
- Do not drop the inverter, or subject it to impact.
- Use the inverter under the following environmental conditions:

Environment	Ambient temperature	Constant torque : -10°C to +50°C (14°F to 122 °F) (non-freezing)
	Ambient humidity	90%RH or less (non-condensing)
	Storage temperature	-20°C to +65°C * (-4°F to 149 °F)
	Ambience	Indoors (free from corrosive gas, flammable gas, oil mist, dust and dirt)
	Altitude, vibration	Maximum 1000m (3280.80 feet) above sea level for standard operation. After that derate by 3% for every extra 500m (1640.40 feet) up to 2500m (8202.00 feet) (91%). 5.9 m/s^2 or less (conforming to JIS C 0911)

*Temperatures applicable for a short time, e.g. in transit.

(2) Wiring

⚠ CAUTION

- Do not fit capacitive equipment such as a power factor correction capacitor, radio noise filter or surge suppressor to the output of the inverter.
- The connection orientation of the output cables U, V, W to the motor will affect the direction of rotation of the motor.

(3) Trial run

⚠ CAUTION

- Check all parameters, and ensure that the machine will not be damaged by a sudden start-up.

(4) Operation

⚠ WARNING

- When you have chosen the retry function, stay away from the equipment as it will restart suddenly after an alarm stop.
- The [STOP] key is valid only when the appropriate function setting has been made. Prepare an emergency stop switch separately.
- Make sure that the start signal is off before resetting the inverter alarm. A failure to do so may restart the motor suddenly.
- The load used should be a three-phase induction motor only. Connection of any other electrical equipment to the inverter output may damage the equipment.
- Do not modify the equipment.

⚠ CAUTION

- The electronic overcurrent protection does not guarantee protection of the motor from overheating.
- Do not use a magnetic contactor on the inverter input for frequent starting/stopping of the inverter.
- Use a noise filter to reduce the effect of electromagnetic interference. Otherwise nearby electronic equipment may be affected.
- Take measures to suppress harmonics. Otherwise power harmonics from the inverter may heat/damage the power capacitor and generator.

⚠ CAUTION

- When a 400V class motor is inverter-driven, it should be insulation-enhanced or surge voltages suppressed. Surge voltages attributale to the wiring constants may occur at the motor terminals, deteriorating the insulation of the motor.
- When parameter clear or all clear is performed, each parameter returns to the factory setting. Re-set the required parameters before starting operation.
- The inverter can be easily set for high-speed operation. Before changing its setting, fully examine the performances of the motor and machine.
- In addition to the inverter's holding function, install a holding device to ensure safety.
- Before running an inverter which had been stored for a long period, always perform inspection and test operation.

(5) Emergency stop

⚠ CAUTION

- Provide a safety backup such as an emergency brake which will prevent the machine and equipment from hazardous conditions if the inverter fails.

(6) Maintenance, inspection and parts replacement

⚠ CAUTION

- Do not carry out a megger (insulation resistance) test on the control circuit of the inverter.

(7) Disposing of the inverter

⚠ CAUTION

- Treat as industrial waste.

(8) General instructions

Many of the diagrams and drawings in this instruction manual show the inverter without a cover, or partially open. Never operate the inverter like this. Always replace the cover and follow this instruction manual when operating the inverter.

CONTENTS

1 OUTLINE 1

1.1 Pre-Operation Information 1
1.1.1 Precautions for operation 1
1.2 Basic Configuration 3
1.2.1 Basic configuration 3
1.3 Structure 4
1.3.1 Appearance and structure 4
1.3.2 Removal and reinstallation of the front cover 5
1.3.3 Removal and reinstallation of the wiring cover 7
1.3.4 Removal and reinstallation of the accessory cover 8
1.3.5 Reinstallation and removal of the control panel 9
1.3.6 Removal of the control panel (FR-PA02-02) front cover 10
1.3.7 Exploded view 11

2 INSTALLATION AND WIRING 12

2.1 Installation 12
2.1.1 Instructions for installation 12
2.2 Wiring 14
2.2.1 Terminal connection diagram 14
2.2.2 Wiring of the main circuit 18
2.2.3 Wiring of the control circuit 22
2.2.4 Connection to the PU connector 27
2.2.5 Connection of stand-alone option units 30
2.2.6 Design information 33
2.3 Other Wiring 34
2.3.1 Power supply harmonics 34
2.3.2 Inverter-generated noise and reduction techniques 35
2.3.3 Leakage currents and countermeasures 39
2.3.4 Inverter-driven 400V class motor 40
2.3.5 Peripheral devices 41
2.3.6 Instructions for compliance with U.S and Canadian Electrical Codes 45
2.3.7 Instructions for compliance with the European standards 46

3 OPERATION/CONTROL 48

3.1 Pre-Operation Information 48
3.1.1 Types of operation modes 48
3.1.2 Power on 50
3.2 About the Control Panel 51
3.2.1 Names and functions of the control panel (FR-PA02-02) 51
3.2.2 Control panel mode is changed by pressing the MODE key 52
3.2.3 Monitoring 52
3.2.4 Frequency setting 53
3.2.5 Parameter setting method 53
3.2.6 Operation mode 55
3.2.7 Help mode 55
3.3 Operation 58
3.3.1 Pre-operation checks 58
3.3.2 External operation mode (Operation using the external frequency setting potentiometer and external start signal) 59
3.3.3 PU operation mode (Operation using the control panel) 60
3.3.4 Combined operation mode 1 (Operation using both external start signal and control panel) 61
3.3.5 Combined operation mode 2 62

4 PARAMETERS 63

4.1 Parameter List 63
4.1.1 Parameter list 63
4.1.2 List of parameters classified by purpose of use 69
4.1.3 Parameters recommended to be set by the user 71
4.2 Parameter Function Details 72
4.2.1 Torque boost (Pr. 0, Pr. 46) 72
4.2.2 Output frequency range (Pr. 1, Pr. 2, Pr. 18) 73
4.2.3 Base frequency, base frequency voltage (Pr. 3, Pr. 19, Pr. 47) 74
4.2.4 Multi-speed operation (Pr. 4, Pr. 5, Pr. 6, Pr. 24 to Pr. 27, Pr. 232 to Pr. 239) 75
4.2.5 Acceleration/deceleration time (Pr. 7, Pr. 8, Pr. 20, Pr. 21, Pr. 44, Pr. 45) 76
4.2.6 Electronic overcurrent protection (Pr. 9, Pr. 48) 78
4.2.7 DC injection brake (Pr. 10 to Pr. 12) 79

4.2.8 Starting frequency (Pr. 13) 80
4.2.9 Load pattern selection (Pr. 14) 81
4.2.10 Jog operation (Pr. 15, Pr. 16) 82
4.2.11 Stall prevention (Pr. 22, Pr. 23, Pr. 66) 83
4.2.12 Acceleration/deceleration pattern (Pr. 29) 85
4.2.13 Regenerative brake duty (Pr. 30, Pr. 70) 86
4.2.14 Frequency jump (Pr. 31 to Pr. 36) 87
4.2.15 Speed display (Pr. 37) 88
4.2.16 Frequency at 5V (10V) input (Pr. 38) 89
4.2.17 Frequency at 20mA input (Pr. 39) 89
4.2.18 Up-to-frequency sensitivity (Pr. 41) 90
4.2.19 Output frequency detection (Pr. 42, Pr. 43) 90
4.2.20 Monitor display (Pr. 52, Pr. 54, Pr. 158) 92
4.2.21 Monitoring reference (Pr. 55, Pr. 56) 94
4.2.22 Automatic restart after instantaneous power failure (Pr. 57, Pr. 58) 95
4.2.23 Remote setting function selection (Pr. 59) 97
4.2.24 Shortest acceleration/deceleration mode (Pr. 60 to Pr. 63) 99
4.2.25 Retry function (Pr. 65, Pr. 67 to Pr. 69) 101
4.2.26 Applied motor (Pr. 71) 103
4.2.27 PWM carrier frequency (Pr. 72, Pr. 240) 104
4.2.28 Voltage input (Pr. 73) 105
4.2.29 Input filter time constant (Pr. 74) 106
4.2.30 Reset selection/disconnected PU detection/PU stop selection (Pr. 75) 106
4.2.31 Parameter write inhibit selection (Pr. 77) 108
4.2.32 Reverse rotation prevention selection (Pr. 78) 109
4.2.33 Operation mode selection (Pr. 79) 110
4.2.34 General-purpose magnetic flux vector control selection (Pr. 80) 113
4.2.35 Offline auto tuning function (Pr. 82 to Pr. 84, Pr. 90, Pr. 96) 115
4.2.36 Computer link operation (Pr. 117 to Pr. 124, Pr. 342) 121
4.2.37 PID control (Pr. 128 to Pr. 134) 134
4.2.38 Output current detection function (Pr. 150, Pr.151) 142
4.2.39 Zero current detection (Pr. 152, Pr.153) 143
4.2.40 Stall prevention function and current limit function (Pr. 156) 144
4.2.41 User group selection (Pr. 160, Pr. 173 to Pr. 176) 146
4.2.42 Actual operation hour meter clear (Pr. 171) 148

4.2.43 Input terminal function selection (Pr. 180 to Pr. 183) 148
4.2.44 Output terminal function selection (Pr. 190 to Pr. 192)..... 150
4.2.45 Cooling fan operation selection (Pr. 244) 151
4.2.46 Slip compensation (Pr. 245 to Pr. 247) 152
4.2.47 Ground fault detection at start (Pr. 249)
(400V class does not have this function) 153
4.2.48 Stop selection (Pr. 250)..... 154
4.2.49 Output phase failure protection selection (Pr. 251) 155
4.2.50 Meter (frequency meter) calibration (Pr. 900) (200V class, 100V class) 156
4.2.51 Meter (frequency meter) calibration (Pr. 901) (400V class)..... 158
4.2.52 Biases and gains of the frequency setting voltage (current)
(Pr. 902 to Pr. 905)..... 160

5 PROTECTIVE FUNCTIONS 166

5.1 Errors (Alarms)..... 166
5.1.1 Error (alarm) definitions..... 166
5.1.2 To know the operating status at the occurrence of alarm..... 174
5.1.3 Correspondence between digital and actual characters..... 174
5.1.4 Resetting the inverter 174
5.2 Troubleshooting 175
5.2.1 Motor remains stopped..... 175
5.2.2 Motor rotates in opposite direction 175
5.2.3 Speed greatly differs from the setting..... 176
5.2.4 Acceleration/deceleration is not smooth..... 176
5.2.5 Motor current is large..... 176
5.2.6 Speed does not increase..... 176
5.2.7 Speed varies during operation..... 176
5.2.8 Operation mode is not changed properly 177
5.2.9 Control panel display is not operating 177
5.2.10 POWER lamp is not lit..... 177
5.2.11 Parameter write cannot be performed..... 177
5.3 Precautions for Maintenance and Inspection..... 178
5.3.1 Precautions for maintenance and inspection 178
5.3.2 Check items..... 178
5.3.3 Periodic inspection 178

5.3.4 Insulation resistance test using megger 179
5.3.5 Pressure test 179
5.3.6 Daily and Periodic Inspection 180
5.3.7 Replacement of parts 183
5.3.8 Measurement of main circuit voltages, currents and powers 188

6 SPECIFICATIONS 191

6.1 Standard Specifications 191
6.1.1 Model specifications 191
6.1.2 Common specifications 194
6.1.3 Outline drawings 196

APPENDIX 202

Appendix 1 Data Code List 202

CHAPTER 1 OUTLINE

This chapter gives information on the basic "outline" of this product.
Always read the instructions before using the equipment.

1.1 Pre-Operation Information 1
1.2 Basic Configuration..... 3
1.3 Structure 4

<Abbreviations>

- PU
  Control panel and parameter unit (FR-PU04)
- Inverter
  Mitsubishi transistorized inverter FR-E500 series
- Pr.
  Parameter number

1.1 Pre-Operation Information

1.1.1 Precautions for operation

This manual is written for the FR-E500 series transistorized inverters.
Incorrect handling may cause the inverter to operate incorrectly, causing its life to be reduced considerably, or at the worst, the inverter to be damaged. Handle the inverter properly in accordance with the information in each section as well as the precautions and instructions of this manual to use it correctly.
For handling information on the parameter unit (FR-PU04), stand-alone options, etc., refer to the corresponding manuals.

(1) Unpacking and product check

Unpack the inverter and check the capacity plate on the front cover and the rating plate on the inverter side face to ensure that the product agrees with your order and the inverter is intact.

1) Inverter type

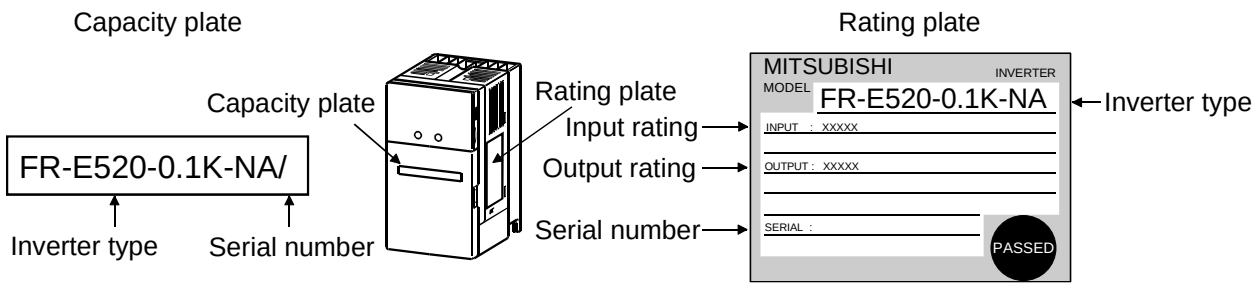

● Inverter type

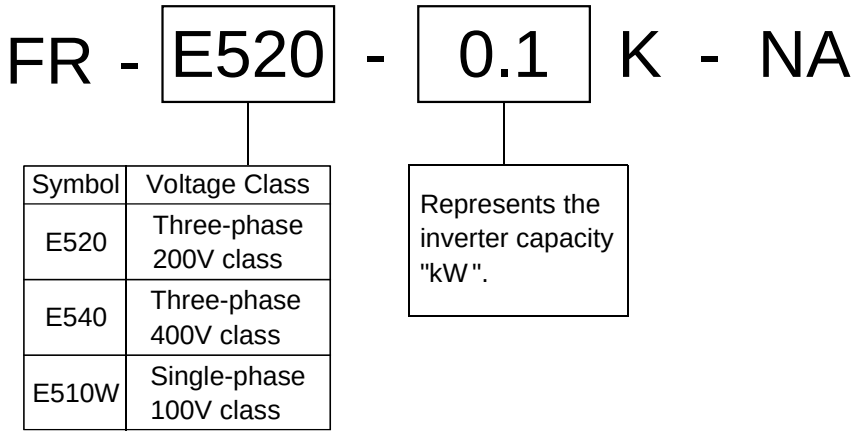

Symbol	Voltage Class
E520	Three-phase 200V class
E540	Three-phase 400V class
E510W	Single-phase 100V class

2) Accessory
Instruction manual

If you have found any discrepancy, damage, etc., please contact your sales representative.

(2) Preparation of instruments and parts required for operation

Instruments and parts to be prepared depend on how the inverter is operated. Prepare equipment and parts as necessary. (Refer to page 48.)

(3) Installation

To operate the inverter with high performance for a long time, install the inverter in a proper place, in the correct direction, with proper clearances. (Refer to page 12.)

(4) Wiring

Connect the power supply, motor and operation signals (control signals) to the terminal block. Note that incorrect connection may damage the inverter and peripheral devices. (See page 14.)

1.2 Basic Configuration

1.2.1 Basic configuration

The following devices are required to operate the inverter. Proper peripheral devices must be selected and correct connections made to ensure proper operation. Incorrect system configuration and connections can cause the inverter to operate improperly, its life to be reduced considerably, and in the worst case, the inverter to be damaged. Please handle the inverter properly in accordance with the information in each section as well as the precautions and instructions of this manual. (For connections of the peripheral devices, refer to the corresponding manuals.)

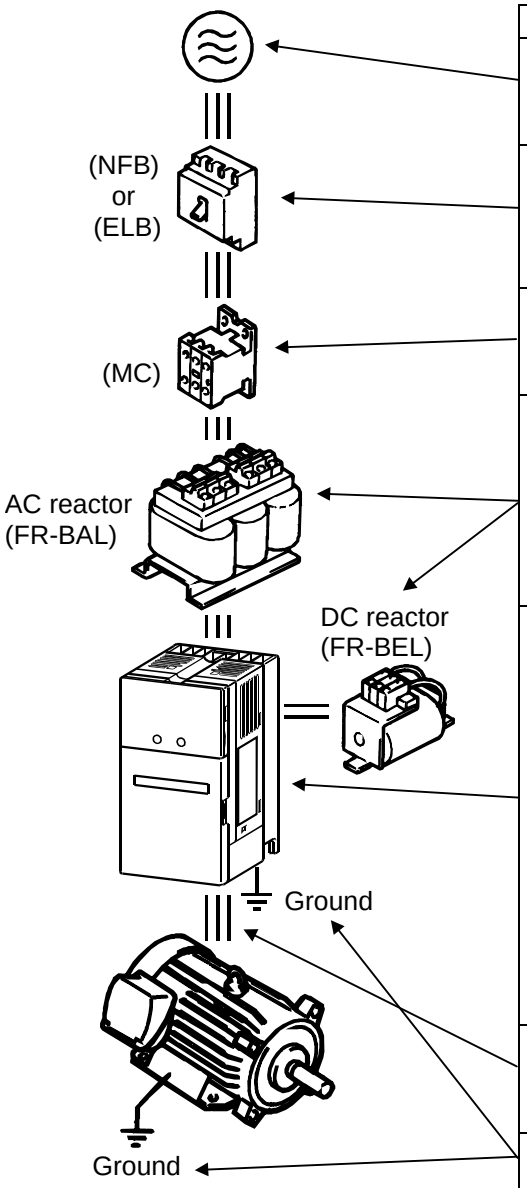

Name	Description
Power supply	Use the power supply within the permissible power supply specifications of the inverter. (Refer to page 191.)
Earth leakage circuit breaker or no-fuse breaker	The breaker should be selected with care since a large inrush current flows in the inverter at power on. (Refer to page 41.)
Magnetic contactor	Do not use this magnetic contactor to start or stop the inverter. It might reduce the inverter life. (Refer to page 41.)
Reactors	The reactors must be used when the power factor is to be improved or the inverter is installed near a large power supply system (1000KVA or more and wiring distance within 10m (32.81 feet)). Make selection carefully.
Inverter	•The inverter life is influenced by ambient temperature. The ambient temperature should be as low as possible within the permissible range. This must be noted especially when the inverter is installed in an enclosure. (Refer to page 12.) •Wrong wiring might lead to inverter damage. The control signal lines should be kept away from the main circuit to protect them from noise. (Refer to page 14.)
Devices connected to the output	Do not connect a power capacitor, surge suppressor or radio noise filter to the output side.
Ground	To prevent an electric shock, always ground the motor and inverter. The ground wiring from the power line of the inverter as an induction noise reduction technique is recommended to be run by returning it to the ground terminal of the inverter. (Refer to page 38.)

1.3.1 Appearance and structure

(1) Front view

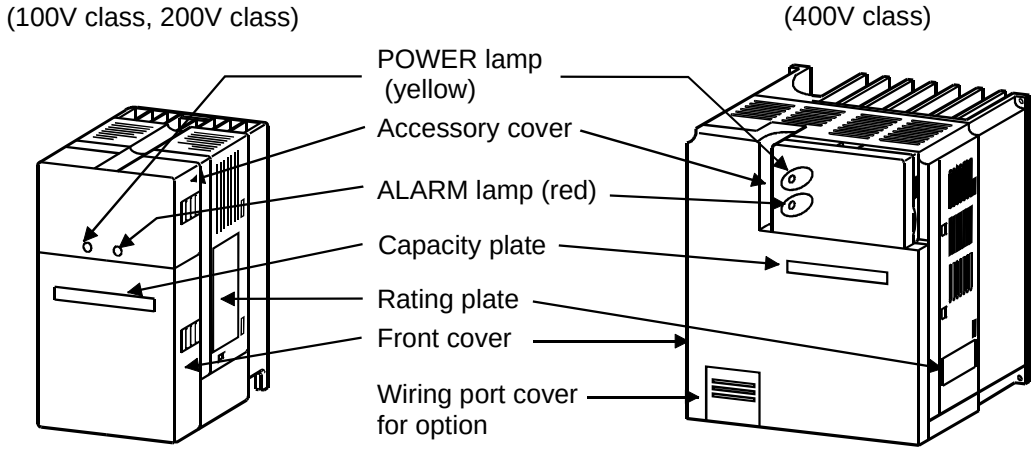

(2) Without accessory cover and front cover

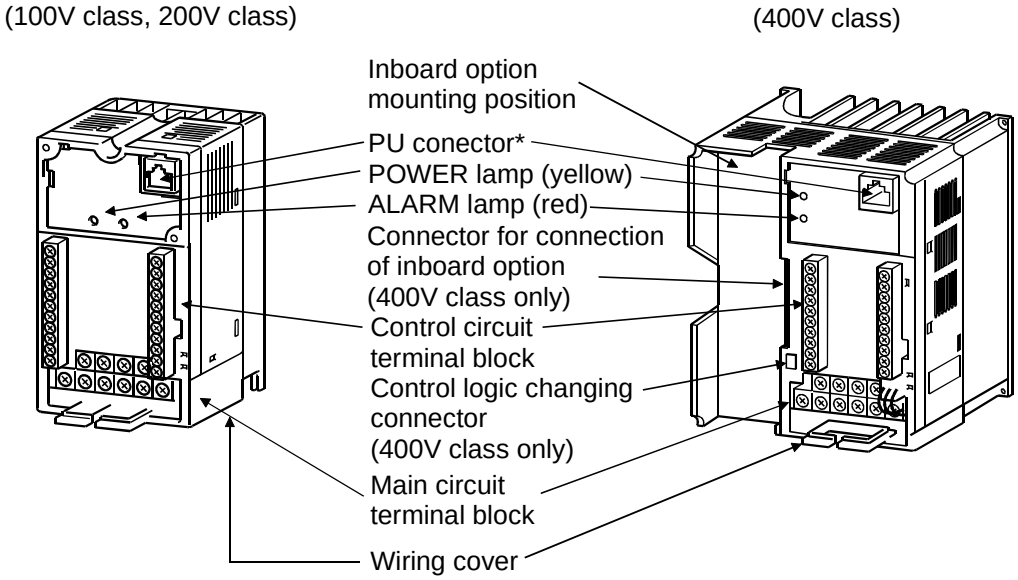

*Use the PU connector for the FR-PA02-02 or FR-PU04 option and RS-485 communication.

1.3.2 Removal and reinstallation of the front cover

● **Removal**

(For the FR-E520-0.1K to 3.7K-NA, FR-E510W-0.1K to 0.75K-NA)

The front cover is secured by catches in positions A and B as shown below.
Push either A or B in the direction of arrows, and using the other end as a support, pull the front cover toward you to remove.

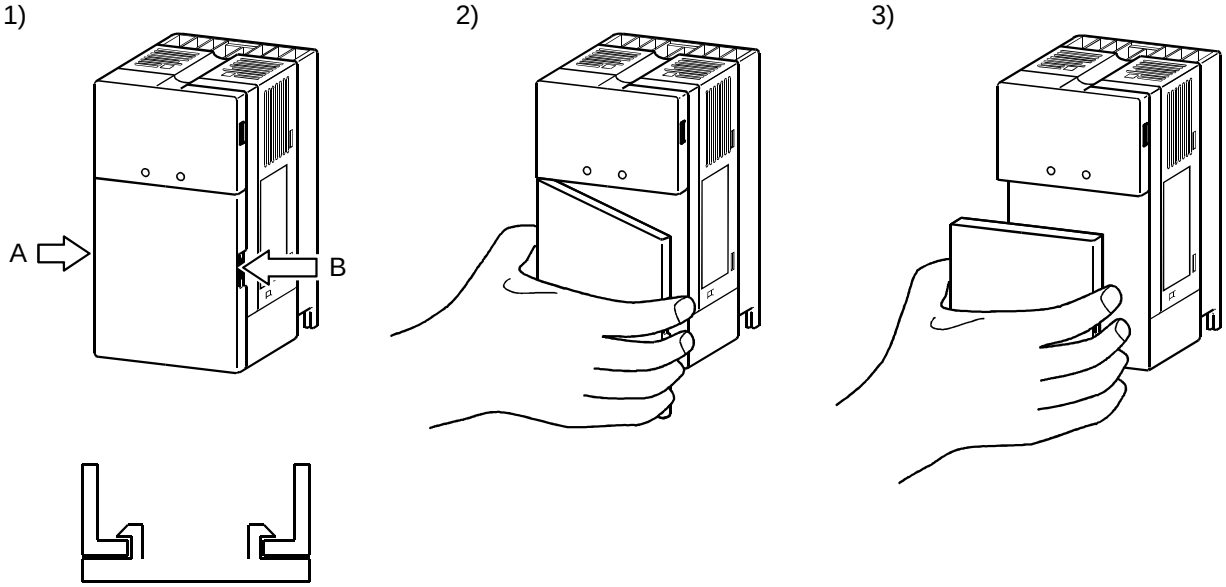

(For the FR-E520-5.5K, 7.5K-NA)

The front cover is fixed with catches in positions A, B and C.
Push A and B in the directions of arrows at the same time and remove the cover using C as supporting points.

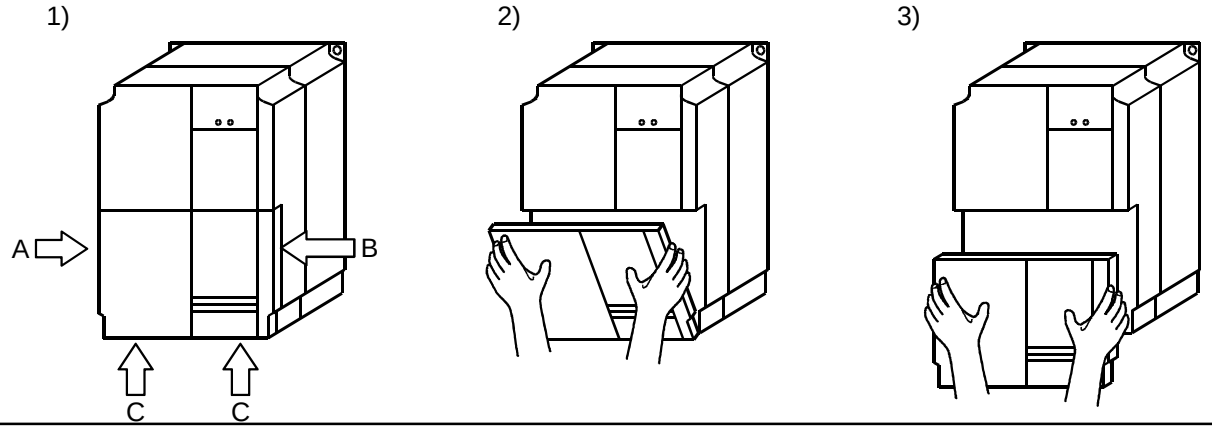

(For the FR-E540-0.4K to 7.5K-NA)

The front cover is fixed with catches in positions A, B and C.
Push A and B in the directions of arrows at the same time and remove the cover using C as supporting points.

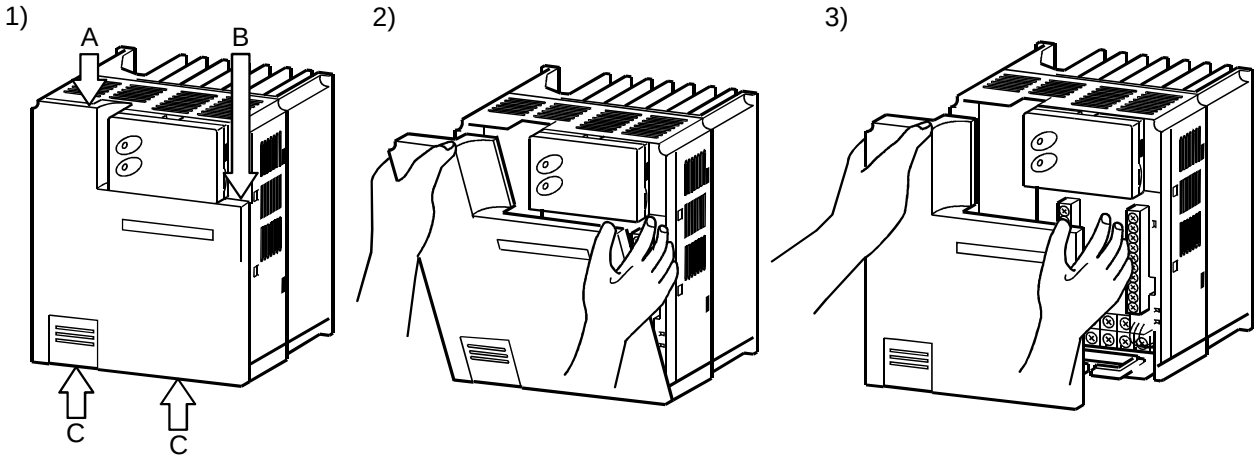

● **Reinstallation**

When reinstalling the front cover after wiring, fix the catches securely.
With the front cover removed, do not switch power on.

Note: 1. Make sure that the front cover has been reinstalled securely.
2. The same serial number is printed on the capacity plate of the front cover and the rating plate of the inverter. Before reinstalling the front cover, check the serial numbers to ensure that the cover removed is reinstalled to the inverter from where it was removed.

1.3.3 Removal and reinstallation of the wiring cover

- **Removal**

(For the FR-E520-0.1K to 7.5K-NA, FR-E510W-0.1K to 0.75K-NA)

The wiring cover is fixed by catches in positions 1) and 2).
Push either 1) or 2) in the direction of arrows and pull the wiring cover downward to remove.

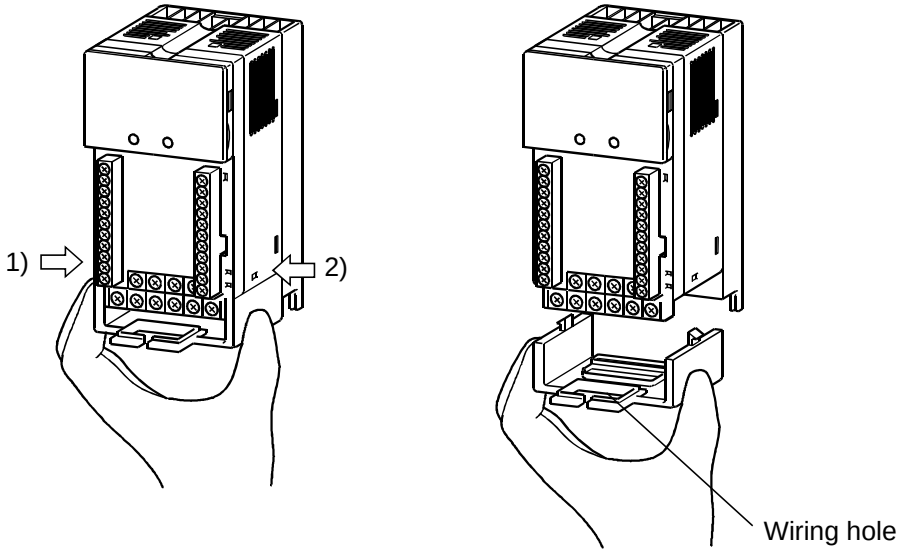

(For the FR-E540-0.4K to 7.5K-NA)

Remove the wiring cover by pulling it in the direction of arrow A.

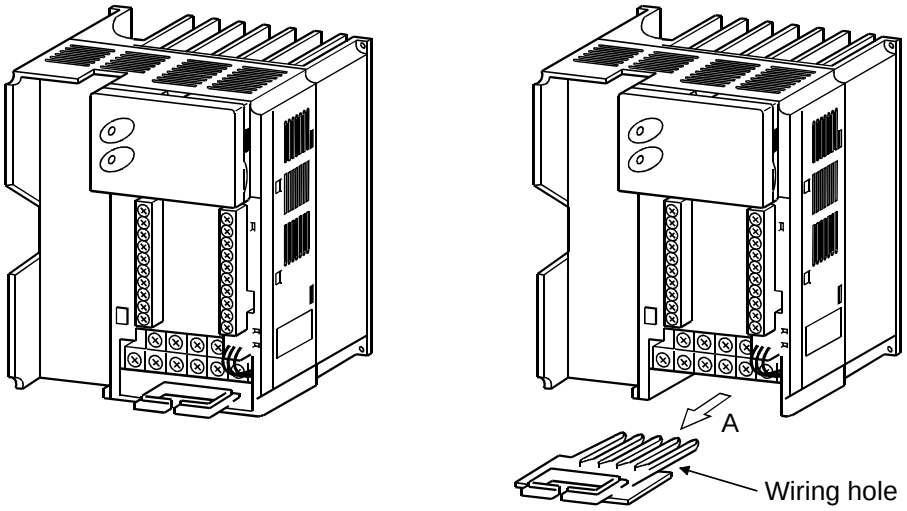

- **Reinstallation**

Pass the cables through the wiring hole and reinstall the cover in the original position.

1.3.4 Removal and reinstallation of the accessory cover

- **Removal of the accessory cover**

Hold down the portion A indicated by the arrow and lift the right hand side using the portion B indicated by the arrow as a support, and pull out the accessory cover to the right.

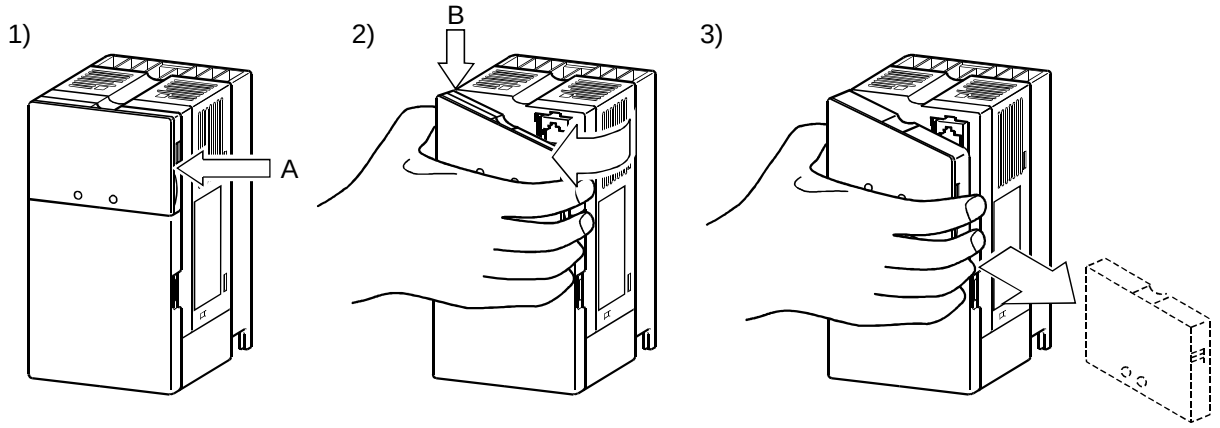

- **Reinstallation of the accessory cover**

Insert the mounting catch (left hand side) of the accessory cover into the mounting position of the inverter and push in the right hand side mounting catch to install the accessory cover.

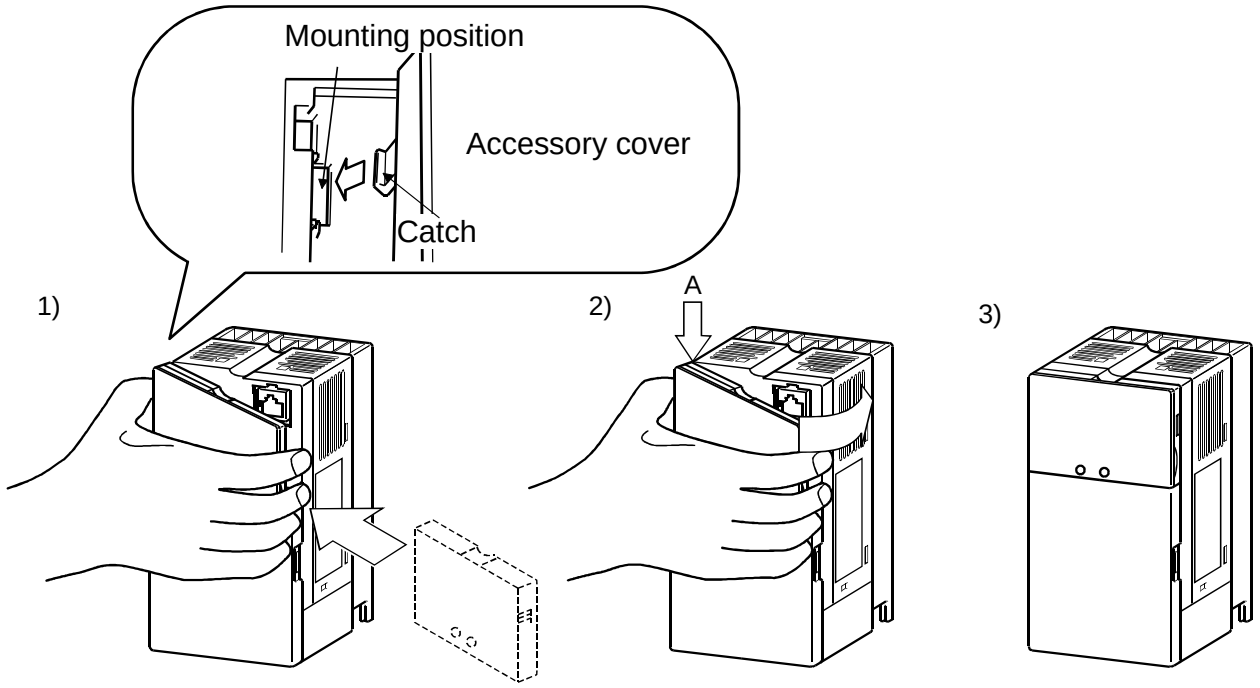

1.3.5 Reinstallation and removal of the control panel

To ensure safety, reinstall and removal the optional control panel (FR-PA02-02) after switching power off.
The charging area and control printed board are exposed on the rear surface of the control panel. When removing the control panel, always fit the rear cover option FR-E5P. Never touch the control printed board because touching it can cause the inverter to fail.

- **Reinstallation of the control panel**

  Insert the mounting catch (left hand side) of the control panel into the mounting position of the inverter and push in the right hand side mounting catch to install the control panel.

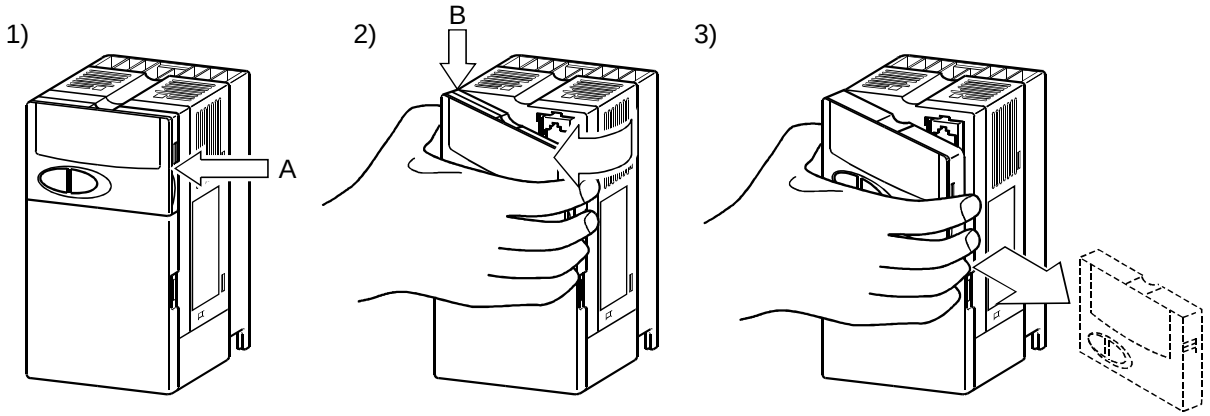

- **Removal of the control panel**

  Hold down the portion A indicated by the arrow and lift the right hand side using the portion B indicated by the arrow as a support, and pull out the control panel to the right.

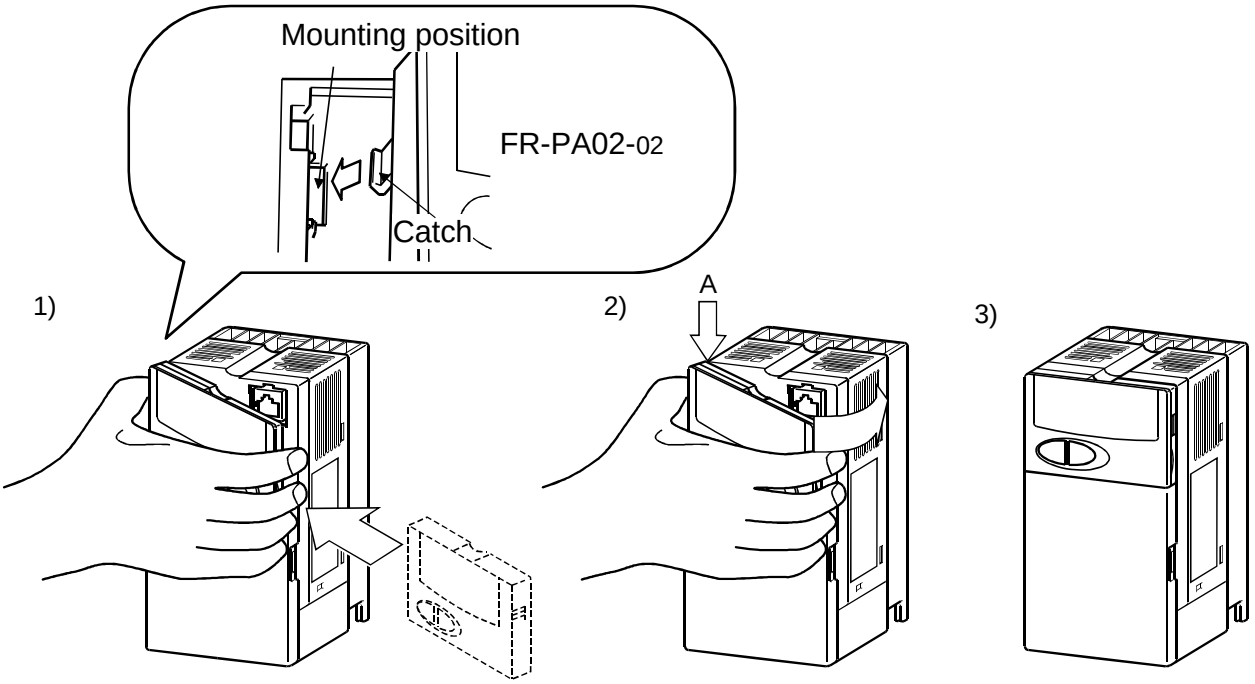

(If the above procedure is not used for removal, the internal connector may be damaged by the force applied.)

- **Using the connection cable for operation**

  1) Fit the rear cover option FR-E5P to the back surface of the optional control panel.
  2) Securely plug one end of the connection cable into the PU connector of the inverter and the other end into the adaptor of the FR-E5P option to connect it to the control panel. (For the connection cable of the FR-E5P, refer to page 27.)

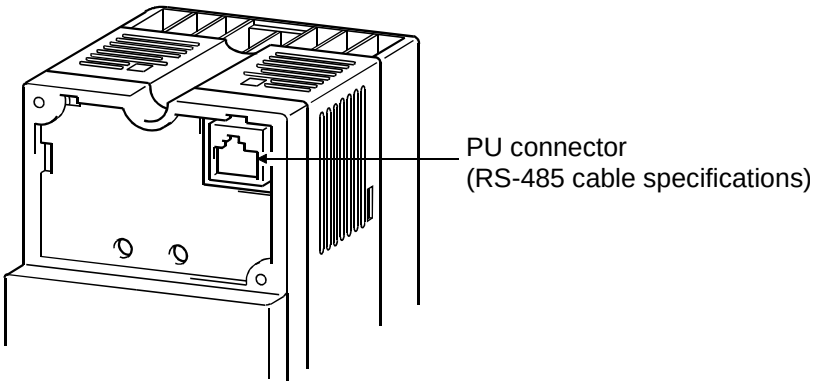

- **Mounting the control panel on an enclosure**

  When you open the control panel front cover, the screw mounting guides for fixing the control panel to an enclosure appear on the top left and bottom right. Fit the rear cover of the FR-E5P option, drill holes in the control panel mounting guides, and securely mount the control panel on the enclosure with screws.

1.3.6 Removal of the control panel (FR-PA02-02) front cover

1) Open the control panel front cover to 90 degrees.
2) Pull out the control panel front cover to the left to remove it.

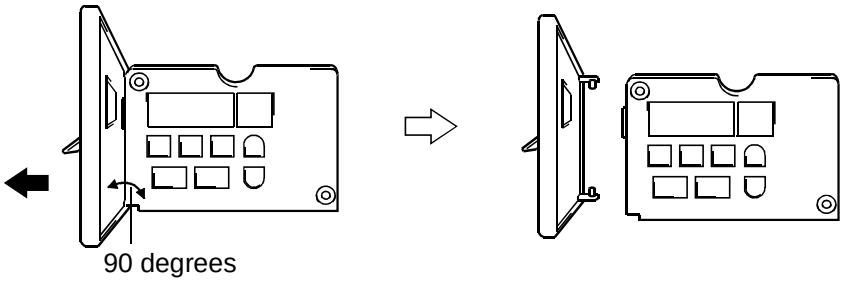

1.3.7 Exploded view

- **FR-E520-0.1K to 7.5K-NA**
- **FR-E510W-0.1K to 0.75K-NA**

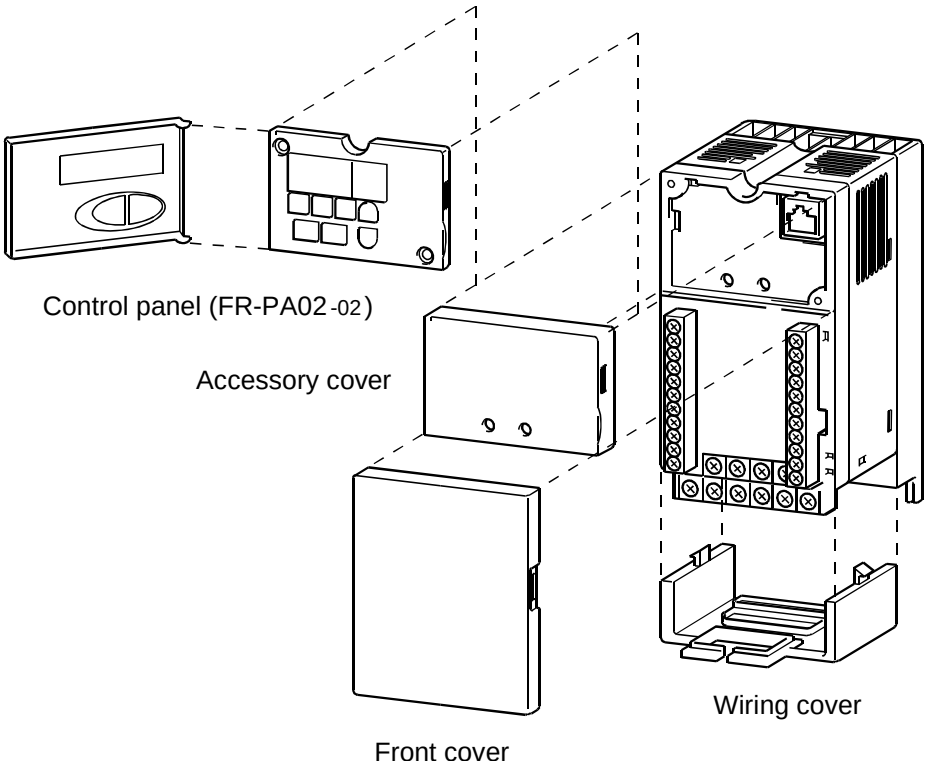

- **FR-E540-0.4K to 7.5K-NA**

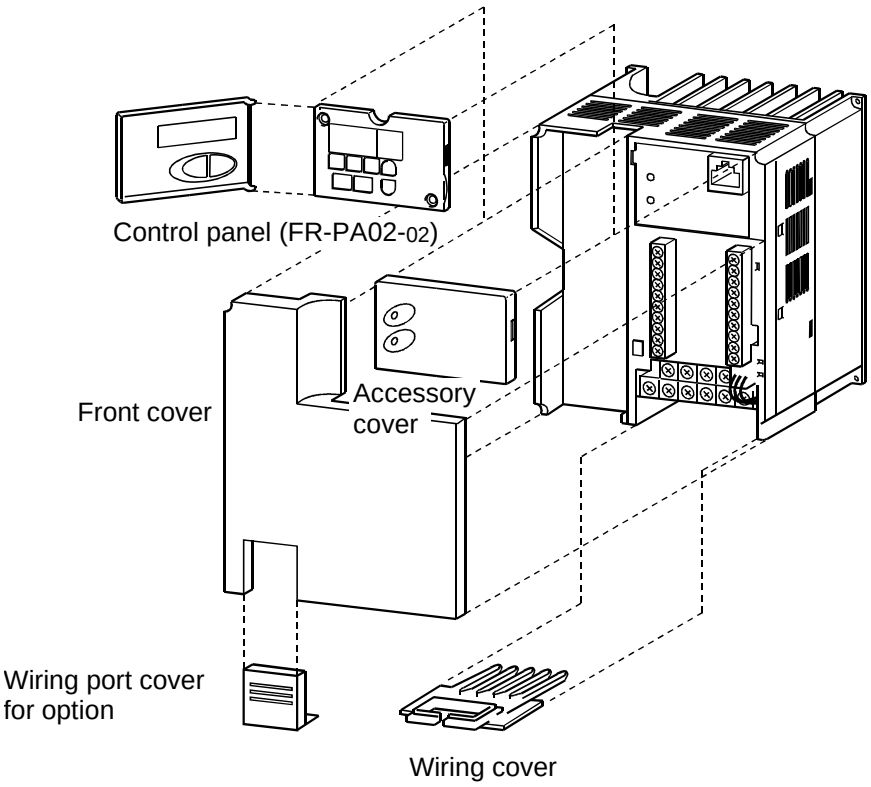

CHAPTER 2
INSTALLATION AND WIRINNG

This chapter gives information on the basic "installation and wiring" for use of this product.
Always read the instructions in this chapter before using the equipment.

2.1 Installation 12
2.2 Wiring 14
2.3 Other Wiring 34

2.1 Installation

2.1.1 Instructions for installation

For the FR-E520-0.1K to 0.75K-NA and FR-E510W-0.1K to 0.4K-NA, install the inverter with the accessory cover or control panel (FR-PA02-02) front cover open.

<For the accessory cover>

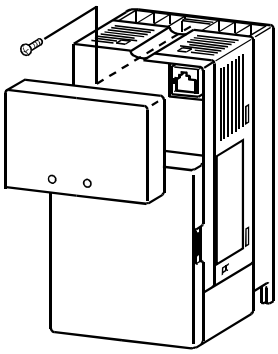

<For the control panel (FR-PA02-02)>

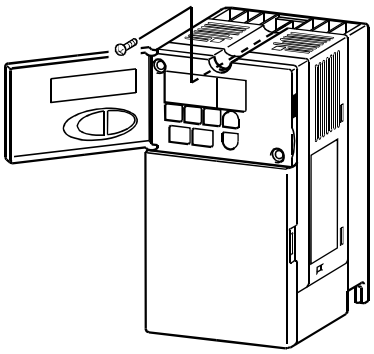

1) Handle the unit carefully.
   The inverter uses plastic parts. Handle it gently to protect it from damage.
   Also, hold the unit with even strength and do not apply too much strength to the front cover alone.

2) Install the inverter in a place where it is not affected by vibration easily (5.9m/s^2 maximum).
   Note the vibration of a cart, press, etc.

3) Note on ambient temperature.
   The inverter life is under great influence of ambient temperature. In the place of installation, the ambient temperature must be within the permissible range -10°C to +50°C (14°F to 122°F). Check that the ambient temperature is within that range in the positions shown in figure 3).

4) Install the inverter on a non-combustible surface.
   The inverter will be very hot (maximum about 150°C (302°F)). Install it on a non-combustible surface (e.g. metal). Also leave sufficient clearances around the inverter.

5) Avoid high temperatures and high humidity.
   Avoid direct sunlight and places of high temperature and high humidity.

6) Avoid places where the inverter is exposed to oil mist, flammable gases, fluff, dust, dirt etc.
   Install the inverter in a clean place or inside a "totally enclosed" panel which does not accept any suspended matter.

7) Note the cooling method when the inverter is installed in an enclosure.
When two or more inverters are installed or a ventilation fan is mounted in an enclosure, the inverters and ventilation fan must be installed in proper positions with extreme care taken to keep the ambient temperatures of the inverters with the permissible values. If they are installed in improper positions, the ambient temperatures of the inverters will rise and ventilation effect will be reduced.

8) Install the inverter securely in the vertical direction with screws or bolts.

3) Note on ambient temperatures

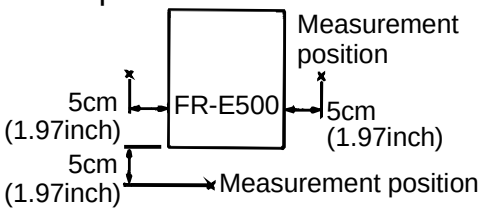

4) Clearances around the inverter

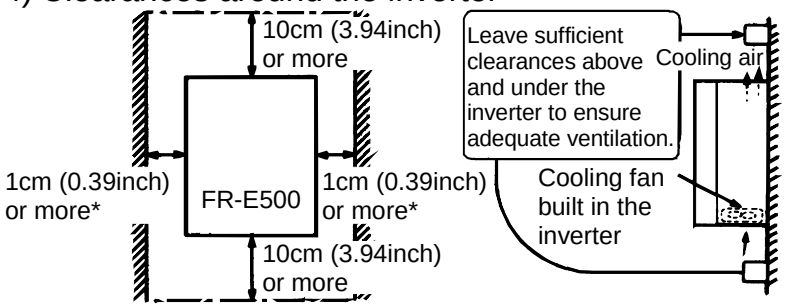

*5cm (1.97inch) or more for 5.5K and 7.5K
These clearances are also necessary for changing the cooling fan.

7) For installation in an enclosure

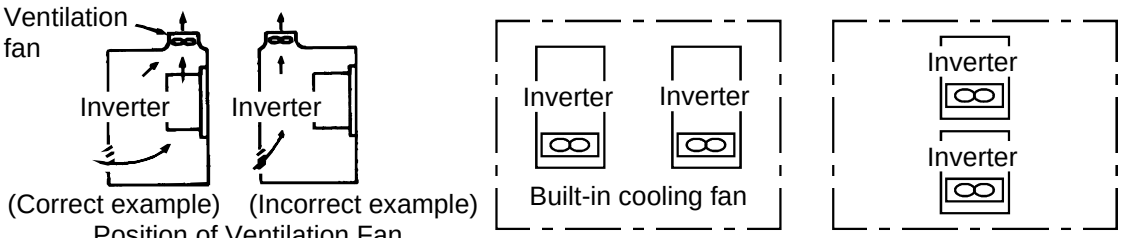

(Correct example) (Incorrect example)
Position of Ventilation Fan

(Correct example) (Incorrect example)
When more than one inverter is contained

8) Vertical mounting

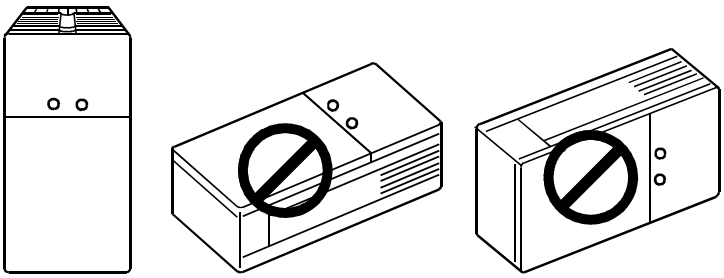

2

2.2.1 Terminal connection diagram

- **3-phase 200V power input**
- **3-phase 400V power input**

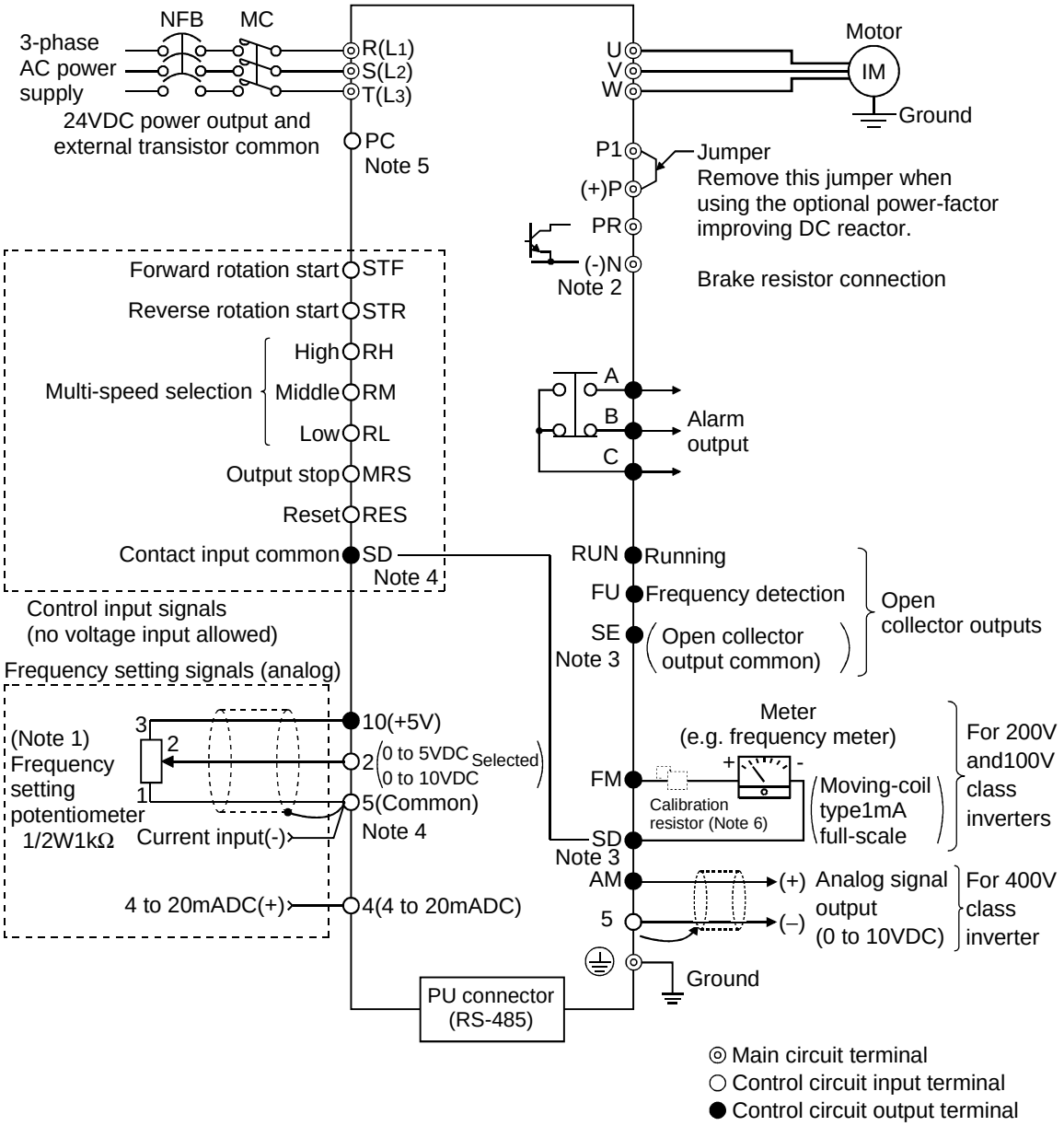

Note: 1. If the potentiometer is to be operated often, use a 2W1kΩ potentiometer.
2. 0.1K and 0.2K do not contain a transistor.
3. Terminals SD and SE are isolated.
4. Terminals SD and 5 are common terminals. Do not earth them to the ground. Terminals SD and 5 are not isolated. (Those of the 400V class are isolated.)
5. When terminals PC-SD are used as a 24VDC power supply, be careful not to short these terminals. If they are shorted, the inverter will be damaged.
6. Not needed when the control panel (FR-PA-02-02) or parameter unit (FR-PU04) is used for calibration. Used when calibration must be made near the frequency meter for such a reason as a remote frequency meter. However, the frequency meter needle may not deflect to full-scale if the calibration resistor is connected. In this case, use this resistor and the control panel or parameter unit together.

● **Single-phase 100V power input**

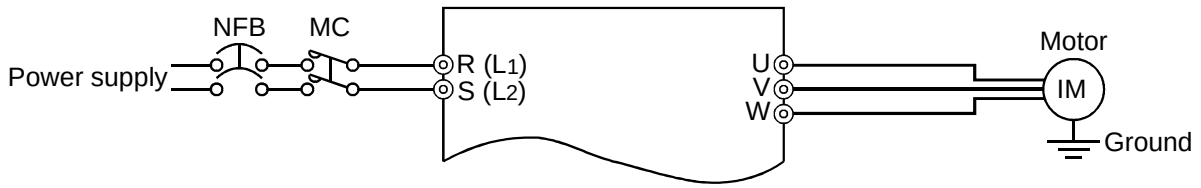

Note: 1. To ensure safety, connect the power input to the inverter via a magnetic contactor and earth leakage circuit breaker or no-fuse breaker, and use the magnetic contactor to switch power on-off.
2. The output is three-phase 200V.

(1) Description of the main circuit terminals

Symbol	Terminal Name	Description
R, S, T (L_1, L_2, L_3) (Note)	AC power input	Connect to the commercial power supply. Keep these terminals unconnected when using the high power factor converter.
U, V, W	Inverter output	Connect a three-phase squirrel-cage motor.
P (+), PR	Brake resistor connection	Connect the optional brake resistor across terminals P-PR (+ - PR) (not for 0.1K and 0.2K).
P (+), N (–)	Brake unit connection	Connect the optional brake unit or high power factor converter.
P (+), P1	Power factor improving DC reactor connection	Disconnect the jumper from terminals P-P1 (+ - P1) and connect the optional power factor improving DC reactor.
⏚	Ground	For grounding the inverter chassis. Must be earthed.

Note: R, S (L_1, L_2) terminals for single-phase power input.

2

(2) Description of the control circuit terminals

Type		Symbol	Terminal Name	Description	
Input signals	Contacts, e.g. start (STF), stop (STOP) etc	STF	Forward rotation start	Turn on the STF signal to start forward rotation and turn it off to stop.	When the STF and STR signals are turned on simultaneously, the stop command is given.
		STR	Reverse rotation start	Turn on the STR signal to start reverse rotation and turn it off to stop.	
		RH, RM, RL	Multi-speed selection	Combine the RH, RM and RL signals as appropriate to select multiple speeds.	Input terminal function choices (Pr. 180 to Pr. 183) change terminal functions.
		MRS	Output stop	Turn on the MRS signal (20ms or longer) to stop the inverter output. Used to shut off the inverter output to bring the motor to a stop by the electromagnetic brake.	
		RES	Reset	Used to reset the protective circuit activated. Turn on the RES signal for more than 0.1 second then turn it off.	
		SD	Contact input common (sink*)	Common to the contact input terminals and terminal FM. Common output terminal for 24VDC 0.1A power output (PC terminal).	
		PC	Power output and external transistor common Contact input common (source*)	When transistor output (open collector output), such as a programmable controller (PLC), is connected, connect the external power supply common for transistor output to this terminal to prevent a fault caused by undesirable current. This terminal can be used as a 24VDC, 0.1A power output.	
Analog	Frequency setting	10	Frequency setting power supply	5VDC, permissible load current 10mA	
		2	Frequency setting (voltage)	By entering 0 to 5VDC (0 to 10VDC), the maximum output frequency is reached at 5V (or 10V) and I/O are proportional. Use Pr. 73 to switch between input 0 to 5VDC (factory setting) and 0 to 10VDC. Input resistance 10kΩ. Maximum permissible voltage 20V.	
		4	Frequency setting (current)	By entering 4 to 20mADC, the maximum output frequency is reached at 20mA and I/O are proportional. This input signal is valid only when the AU signal is on. Input resistance 250Ω. Maximum permissible current 30mA.	
		5	Frequency setting input common	Common to the frequency setting signals (terminal 2, 1 or 4). Do not connect to the earth.	

Note: Assign the AU signal to any of the terminals using the input terminal function selection (Pr. 180 to Pr. 183).

* Used as a contact input signal common terminal for the 400V class by switching between sink logic and source logic. (Refer to page 23).

Type		Symbol	Terminal Name	Description	
Output signals	Contact	A, B, C	Alarm output	Contact output indicating that the output has been stopped by the inverter protective function activated. 230VAC 0.3A, 30VDC 0.3A. Alarm: discontinuity across B-C (continuity across A-C), normal: continuity across B-C (discontinuity across A-C).	Output terminal function choices (Pr. 190 to Pr. 192) change terminal functions.
	Open collector	RUN	Inverter running	Switched low when the inverter output frequency is equal to or higher than the starting frequency (factory set to 0.5Hz, variable). Switched high during stop or DC injection brake operation (*1). Permissible load 24VDC 0.1A.	
		FU	Frequency detection	Switched low when the output frequency has reached or exceeded the detection frequency set as appropriate. Switched high when below the detection frequency (*1). Permissible load 24VDC 0.1A	
		SE	Open collector output common	Common to the RUN and FU terminals.	
	Pulse	FM (200V and 100V class inverters)	For meter	One selected from output frequency, motor current and output voltage is output (*2). The output signal is proportional to the magnitude of each monitoring item.	Factory setting of output item: Frequency Permissible load current 1mA 1440 pulses/s at 60Hz
	Analog	AM (400V class only)	Analog signal output		Factory setting of output item: Frequency Output signal 0 to 10 VDC Permissible load current 1mA
Communication	RS-485	——	PU connector	With the control panel connector, communication can be made using the RS-485 protocol. • Conforming Standard : EIA Standard RS-485 • Transmission format : Multi-drop link • Communication speed : Maximum 19200 bps • Overall length : 500m (1640.40 feet)	

*1: Low indicates that the open collector output transistor is on (conducts). High indicates that the transistor is off (does not conduct).

*2: Not output during inverter resetting.

2.2.2 Wiring of the main circuit

(1) Wiring instructions

1) It is recommended to use insulation-sleeved solderless terminals for power supply and motor wiring.
2) Power must not be applied to the output terminals (U, V, W) of the inverter. Otherwise the inverter will be damaged.
3) After wiring, wire off-cuts must not be left in the inverter.
   Wire off-cuts can cause an alarm, failure or malfunction. Always keep the inverter clean.
   When drilling mounting holes in a control box etc., be careful so that chips and others do not enter the inverter.
4) Use thick cables to make the voltage drop 2% or less.
   If the wiring distance is long between the inverter and motor, a main circuit cable voltage drop will cause the motor torque to decrease, especially at the output of a low frequency. (A selection example for the wiring length of 20m (65.62 feet) is shown on page 21.)
5) For long distance wiring, the overcurrent protection may be activated improperly or the devices connected to the output side may misoperate or become faulty under the influence of a charging current due to the stray capacitance of the wiring. Therefore, the maximum overall wiring length should be as indicated in the following table. If the wiring length exceeds the value, it is recommended to set "1" in Pr. 156 to make the fast-response current limit function invalid. (When two or more motors are connected to the inverter, the total wiring length should be within the indicated value.)

Inverter Capacity		0.1K	0.2K	0.4K	0.75K	1.5K	2.2K	3.7K or more
Non-low acoustic noise mode	100V, 200V class	200 (656.16)	200 (656.16)	300 (984.24)	500 (1640.40)	500 (1640.40)	500 (1640.40)	500 (1640.40)
	400V class	—	—	200 (656.16)	200 (656.16)	300 (984.24)	500 (1640.40)	500 (1640.40)
Low acoustic noise mode	100V, 200V class	30 (98.42)	100 (328.08)	200 (656.16)	300 (984.24)	500 (1640.40)	500 (1640.40)	500 (1640.40)
	400V class	—	—	30 (98.42)	100 (328.08)	200 (656.16)	300 (984.24)	500 (1640.40)

(Unit: m (feet))

Overall wiring length (3.7K or more)

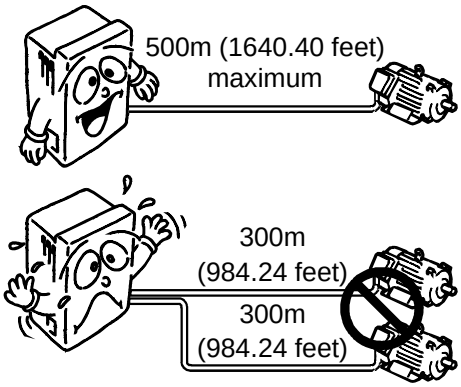

300m (984.24 feet)+300m (984.24 feet)=600m (1968.48 feet)

6) Connect only the recommended optional brake resistor between the terminals P-PR (+ - PR). Keep terminals P-PR (+ - PR) of 0.1K or 0.2K open.
   These terminals must not be shorted.
   0.1K and 0.2K do not accept the brake resistor. Keep terminals P-PR (+ - PR) open. Also, never short these terminals.
7) Electromagnetic wave interference
   The input/output (main circuit) of the inverter includes harmonic components, which may interfere with the communication devices (such as AM radios) used near the inverter. In this case, install the FR-BIF optional radio noise filter (for use in the input side only) or FR-BSF01 or FR-BLF line noise filter to minimize interference.
8) Do not install a power capacitor, surge suppressor or radio noise filter (FR-BIF option) in the output side of the inverter.
   This will cause the inverter to trip or the capacitor and surge suppressor to be damaged. If any of the above devices are installed, immediately remove them. (When using the FR-BIF radio noise filter with a single-phase power supply, connect it to the input side of the inverter after isolating the T phase securely.)
9) When rewiring after operation, make sure that the POWER lamp has gone off, and when more than 10 minutes has elapsed after power-off, check with a meter etc. that the voltage is zero. After that, start rewiring work. For some time after power-off, there is a dangerous voltage in the capacitor.

Notes on Grounding

- Leakage currents flow in the inverter. To prevent an electric shock, the inverter and motor must be grounded.
- Use the dedicated ground terminal to ground the inverter. (Do not use the screw in the case, chassis, etc.) For the earth connection avoid direct contact between aluminium and copper. Tin-plated cable lugs can be used if the plating does not contain zinc. When tightening the screws take care not to damage the thread in the aluminium frame.
- The ground cable should be as thick as possible. Use the cable whose gauge is equal to or larger than those indicated in the following table, and make its length as short as possible. The grounding point should be as near as possible to the inverter to minimize the ground cable length.

(Unit: mm^2)

	Ground Cable Gauge		
	100V class		
2.2kW (3HP) or less	2 (2.5)	200V class	400V class
3.7kW (5HP)	—	2 (2.5)	2 (2.5)
5.5kW (7.5HP), 7.5kW (10HP)	—	3.5 (4)	2 (4)

To meet the Low Voltage Directive, use PVC insulated cables larger than specified size in brackets ( ).

- Ground the motor on the inverter side using one wire of the 4-core cable.

(2) Terminal block layout of the power circuit

FR-E520-0.1K-NA, 0.2K-NA, 0.4K-NA, 0.75K-NA

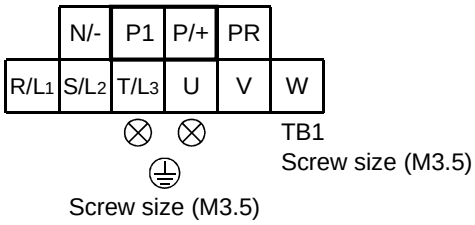

FR-E520-1.5K-NA, 2.2K-NA, 3.7K-NA

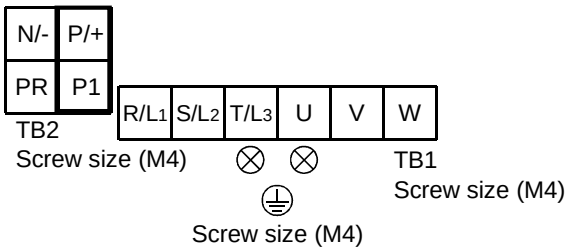

FR-E520-5.5K-NA, 7.5K-NA

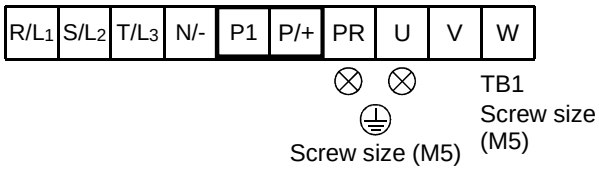

FR-E540-0.4K to 7.5K-NA

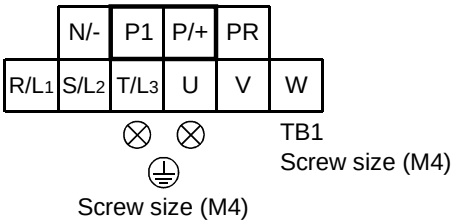

FR-E510W-0.1K-NA, 0.2K-NA, 0.4K-NA

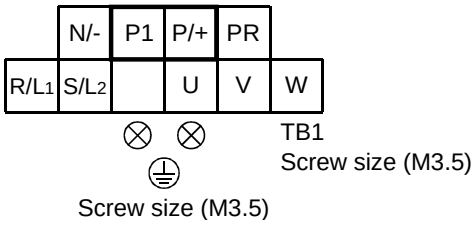

FR-E510W-0.75K-NA

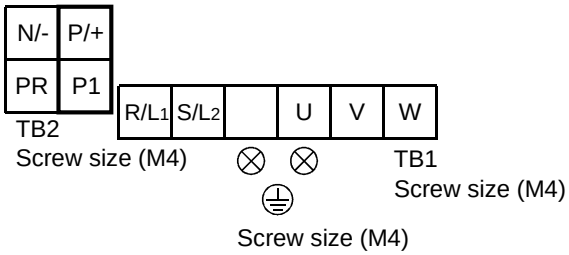

(3) Cables, crimping terminals, etc.

The following table lists the cables and crimping terminals used with the inputs (R (L_1), S (L_2), T (L_3)) and outputs (U, V, W) of the inverter and the torques for tightening the screws:

1) FR-E520-0.1K-NA to 7.5K-NA

Applicable Inverter Type	Terminal Screw Size	Tightening Torque N·m	Crimping Terminals		Cables				PVC insulated Cables	
					mm²		AWG		mm²	
			R, S, T (L_1, L_2, L_3)	U, V, W	R, S, T (L_1, L_2, L_3)	U, V, W	R, S, T (L_1, L_2, L_3)	U, V, W	R, S, T (L_1, L_2, L_3)	U, V, W
FR-E520-0.1K-NA to 0.75K-NA	M3.5	1.2	2-3.5	2-3.5	2	2	14	14	2.5	2.5
FR-E520-1.5K-NA, 2.2K-NA	M4	1.5	2-4	2-4	2	2	14	14	2.5	2.5
FR-E520-3.7K-NA	M4	1.5	5.5-4	5.5-4	3.5	3.5	12	12	4	2.5
FR-E520-5.5K-NA	M5	2.5	5.5-5	5.5-5	5.5	5.5	10	10	6	4
FR-E520-7.5K-NA	M5	2.5	14-5	8-5	14	8	6	8	16	6

2) FR-E540-0.4K-NA to 7.5K-NA

Applicable Inverter Type	Terminal Screw Size	Tightening Torque N·m	Crimping Terminals		Cables				PVC insulated Cables	
					mm²		AWG		mm²	
			R, S, T (L_1, L_2, L_3)	U, V, W	R, S, T (L_1, L_2, L_3)	U, V, W	R, S, T (L_1, L_2, L_3)	U, V, W	R, S, T (L_1, L_2, L_3)	U, V, W
FR-E540-0.4K-NA	M4	1.5	2-4	2-4	2	2	14	14	2.5	2.5
FR-E540-0.75K-NA	M4	1.5	2-4	2-4	2	2	14	14	2.5	2.5
FR-E540-1.5K-NA	M4	1.5	2-4	2-4	2	2	14	14	2.5	2.5
FR-E540-2.2K-NA	M4	1.5	2-4	2-4	2	2	14	14	2.5	2.5
FR-E540-3.7K-NA	M4	1.5	2-4	2-4	2	2	14	14	2.5	2.5
FR-E540-5.5K-NA	M4	1.5	5.5-4	2-4	3.5	2	12	14	4	2.5
FR-E540-7.5K-NA	M4	1.5	5.5-4	5.5-4	3.5	3.5	12	12	4	4

3) FR-E510W-0.1K-NA to 0.75K-NA

Applicable Inverter Type	Terminal Screw Size	Tightening Torque N·m	Crimping Terminals		Cables				PVC insulated Cables	
					mm²		AWG		mm²	
			R, S (L_1, L_2)	U, V, W	R, S, (L_1, L_2)	U, V, W	R, S (L_1, L_2)	U, V, W	R, S (L_1, L_2)	U, V, W
FR-E510W-0.1K-NA to 0.4K-NA	M3.5	1.2	2-3.5	2-3.5	2	2	14	14	2.5	2.5
FR-E510W-0.75K-NA	M4	1.5	5.5-4	2-4	3.5	2	12	14	4	2.5

Note: 1. The cables used should be 75°C (167°F) copper cables.
2. Tighten the terminal screws to the specified torques.
Undertightening can cause a short or misoperation.
Overtightening can cause the screws and unit to be damaged, resulting in a short or misoperation.

(4) Connection of the power supply and motor

● **Three-phase power input**

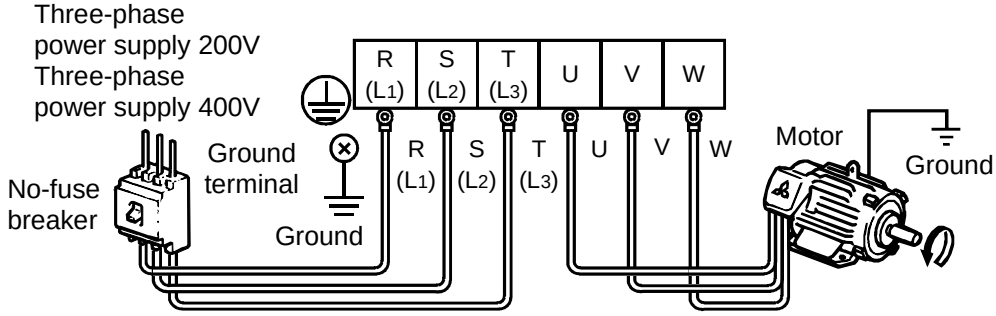

The power supply cables must be connected to R, S, T (L1, L2 , L3). If they are connected to U, V, W, the inverter will be damaged. (Phase sequence need not be matched.)

Connect the motor to U, V, W. In the above connection, turning on the forward rotation switch (signal) rotates the motor in the counterclockwise (arrow) direction when viewed from the load shaft.

● **Single-phase power input**

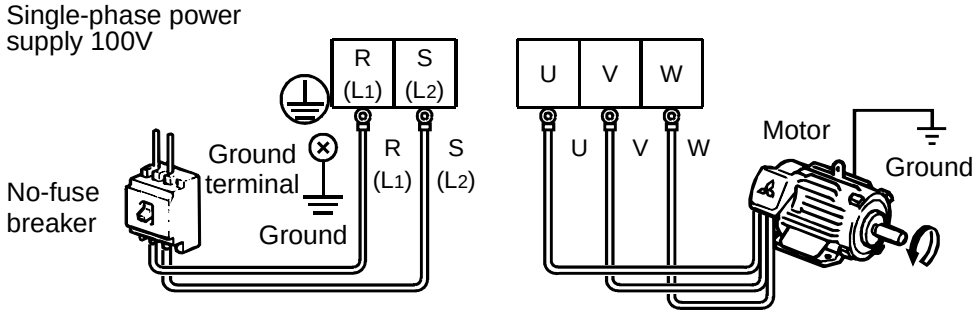

Note: 1. To ensure safety, connect the power input to the inverter via a magnetic contactor and earth leakage circuit breaker or no-fuse breaker, and use the magnetic contactor to switch power on-off. 2. The output is three-phase 200V.

2.2.3 Wiring of the control circuit

(1) Wiring instructions

1) Terminals SD, SE and 5 are common to the I/O signals. These common terminals must not be earthed to the ground.
   Terminals SD and 5 are not isolated. (Those of the 400V class are isolated.)
2) Use shielded or twisted cables for connection to the control circuit terminals and run them away from the main and power circuits (including the 200V relay sequence circuit).
3) The frequency input signals to the control circuit are micro currents. When contacts are required, use two or more parallel micro signal contacts or a twin contact to prevent a contact fault.
4) It is recommended to use the cables of 0.3mm^2 to 0.75mm^2 gauge for connection to the control circuit terminals.
5) When bar terminals and solid wires are used for wiring, their diameters should be 0.9mm (0.04 inches) maximum If they are larger, the screw threads may be damaged during tightening.

(2) Terminal block layout

In the control circuit of the inverter, the terminals are arranged as shown below:
Terminal screw size: M2.5

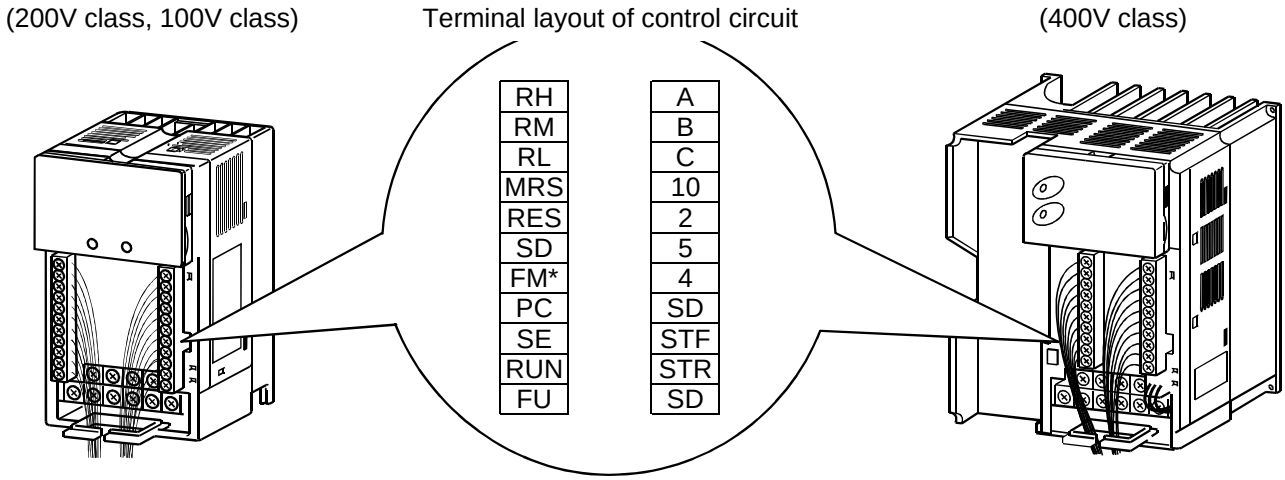

*AM for the 400V class inverter.

(3) Wiring method

1) For wiring the control circuit, use cables after stripping their sheaths.
   Refer to the gauge printed on the inverter and strip the sheaths to the following dimensions. If the sheath is stripped too much, its cable may be shorted with the adjoining cable. If the sheath is stripped too little, the cable may come off.

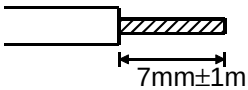

7mm±1mm (0.28inches ± 0.04inches)

2) When using bar terminals and solid wires for wiring, their diameters should be 0.9mm maximum. If they are larger, the threads may be damaged during tightening.
3) Loosen the terminal screw and insert the cable into the terminal.
4) Tighten the screw to the specified torque.
   Undertightening can cause cable disconnection or misoperation. Overtightening can cause damage to the screw or unit, leading to short circuit or misoperation.
   Tightening torque: 0.25 N·m to 0.49 N·m
   * Use a size 0 screwdriver.

Note: When routing the stripped cables, twist them so that they do not become loose. In addition, do not solder them.

(4) Control logic changing (400V class only)

For the 200V and 100V class inverters, the logic cannot be changed.
The input signal logic is factory-set to the sink mode.
To change the control logic, the position of the connector beside the control circuit terminal block must be changed.

1) Use tweezers etc. to remove the connector in the sink logic position and fit it in the source logic position.
   Do this position changing before switching power on.

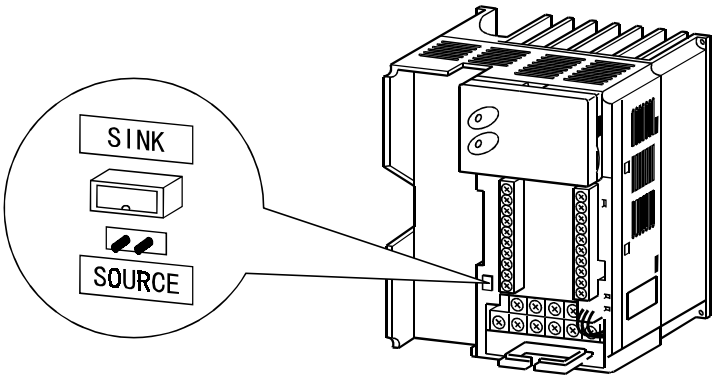

Note: 1. Make sure that the front cover has been installed securely.
2. The front cover has a capacity plate and the inverter a rating plate on it. Since these plates have the same serial numbers, always reinstall the removed cover to the inverter from where it was removed.
3. Always install the sink-source logic changing connector in either of the positions. If two connectors are installed in these positions at the same time, the inverter may be damaged.

2) Sink logic type

- In this logic, a signal switches on when a current flows out of the corresponding signal input terminal.
  Terminal SD is common to the contact input signals. Terminal SE common to the open collector output signals.

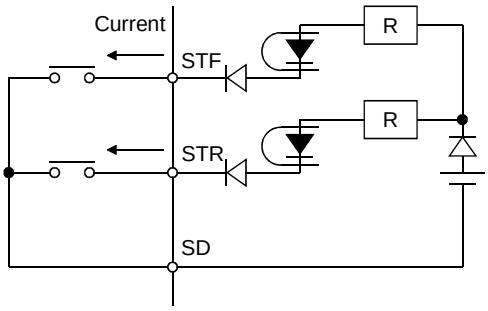

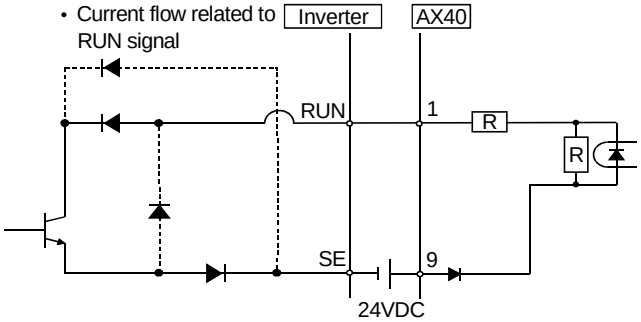

- When using an external power supply for transistor output, use terminal PC as a common to prevent misoperation caused by undesirable current.
  (Do not connect terminal SD of the inverter with terminal 0V of the external power supply. When using terminals PC-SD as a 24VDC power supply, do not install the power supply in parallel outside the inverter. Doing so may cause misoperation due to undesirable current.)

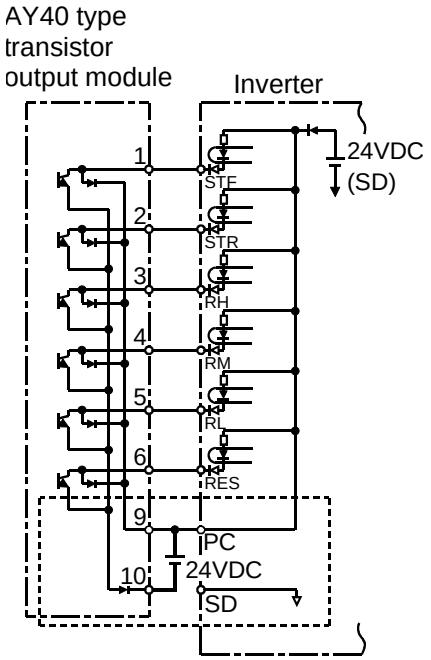

3) Source logic type

- In this logic, a signal switches on when a current flows into the corresponding signal input terminal.
  Terminal PC is common to the contact input signals. Terminal SE common to the open collector output signals.

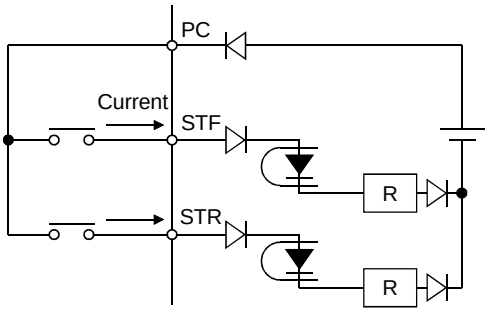

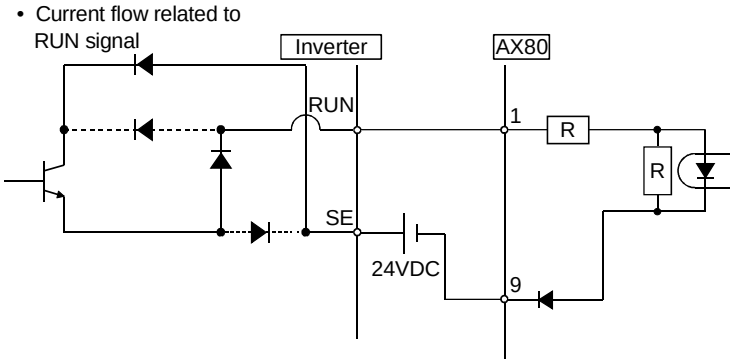

- When using an external power supply for transistor output, use terminal SD as a common to prevent misoperation caused by undesirable current.

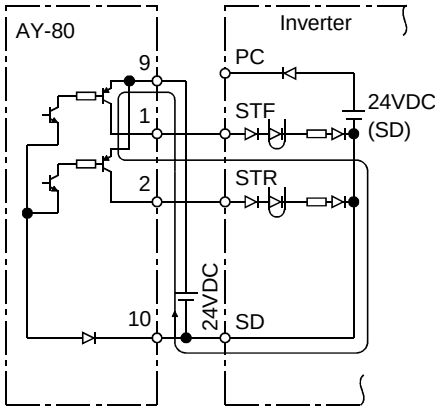

(5) How to use the STOP signal

The following connection example shows how to self-hold the start signals (forward rotation, reverse rotation).
Use Pr. 180 to Pr. 183 (input terminal function selection) to assign the STOP signal.

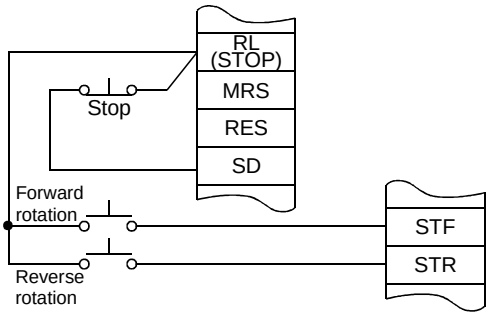

(Wiring example for sink logic)

2.2.4 Connection to the PU connector

(1) When connecting the control panel or parameter unit using a cable

Use the option FR-CB2☐ or the following connector and commercially available cable:

<Connection cable>

- Connector : RJ45 connector
  Example: 5-554720-3, Tyco Electronics Corporation
- Cable : Cable conforming to EIA568 (e.g. 10BASE-T cable)
  Example: SGLPEV 0.5mm×4P (Twisted pair cable, 4 pairs), MITSUBISHI CABLE INDUSTRIES, LTD.

<When using the control panel>

Note: The rear cover and junction adaptor are required since the circuit board is exposed in the back of the control panel.
Use the FR-E5P option (cover and adaptor available as a set).

<Maximum wiring length>

- Control panel (FR-PA02-02): 20m (65.62 feet)
- Parameter unit (FR-PU04): 20m (65.62 feet)

(2) For RS-485 communication

The PU connector can be used for communication operation from a personal computer etc.
When the PU connector is connected with a personal, FA or other computer by a communication cable, a user program allows the inverter to be run and monitored and the parameter values to be read and written.

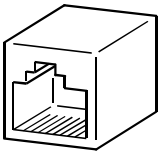

1) SG 5) SDA
2) P5S 6) RDB
3) RDA 7) SG
4) SDB 8) P5S

<PU connector pin-outs>

Viewed from the inverter (receptacle side) front

Note: 1. Do not connect the PU connector to a computer's LAN board, FAX modem socket or telephone modular connector. Otherwise, the product may be damaged due to electrical specification differences.
2. Pins 2) and 8) (P5S) provide power to the control panel or parameter unit. Do not use these pins for RS-485 communication.

<System configuration examples>

1) When a computer having a RS-485 interface is used with several inverters

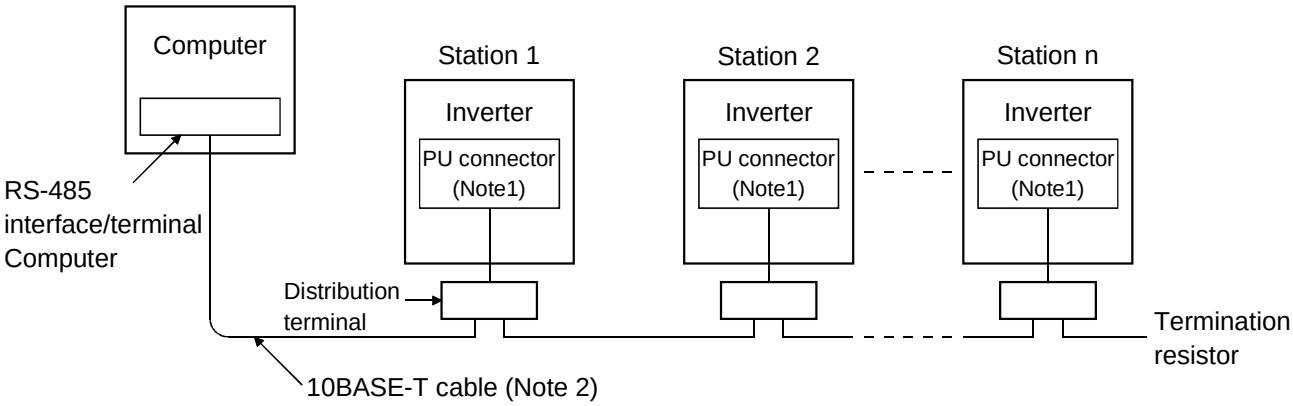

Use the connectors and cables which are available on the market.

Note: 1. Connector: RJ45 connector
Example: 5-554720-3, Tyco Electronics Corporation

2. Cable : Cable conforming to EIA568 (such as 10BASE-T cable)
Example: SGLPEV 0.5mm × 4P (Twisted pair cable, 4 pairs), Mitsubishi Cable Industries, Ltd.

2) When a computer having a RS-232C interface is used with inverters

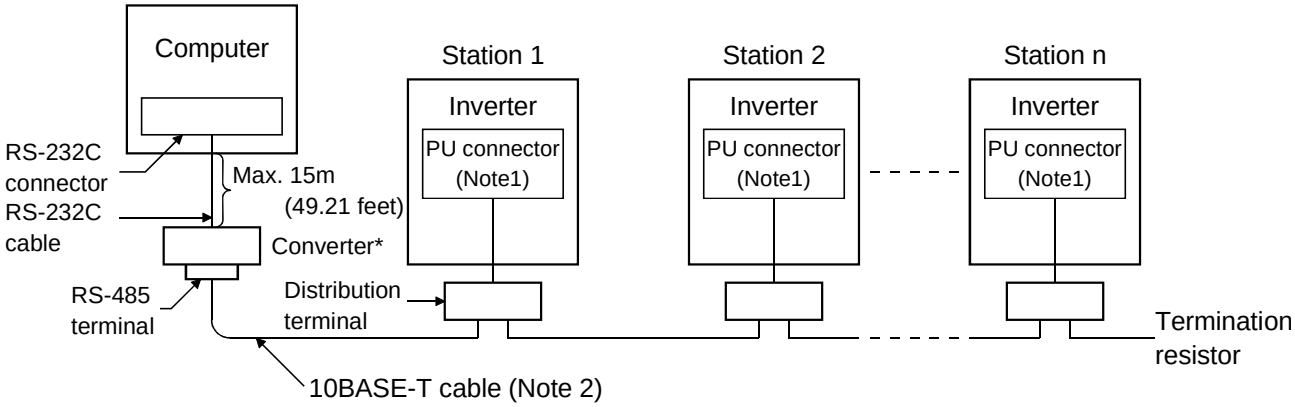

*Commercially available converter is required. (Note 3)

Use the connectors, cables and converter which are available on the market.

Note: 1. Connector: RJ45 connector
Example: 5-554720-3, Tyco Electronics Corporation

2. Cable : Cable conforming to EIA568 (such as 10BASE-T cable)
Example: SGLPEV 0.5mm × 4P (Twisted pair cable, 4 pairs), Mitsubishi Cable Industries, Ltd.

3.*Commercially available converter examples
Model: FA-T-RS40
Converter
Nagoya Sales Office, Mitsubishi Electric Engineering Co., Ltd.

<Wiring methods>

1) Wiring of one RS-485 computer and one inverter

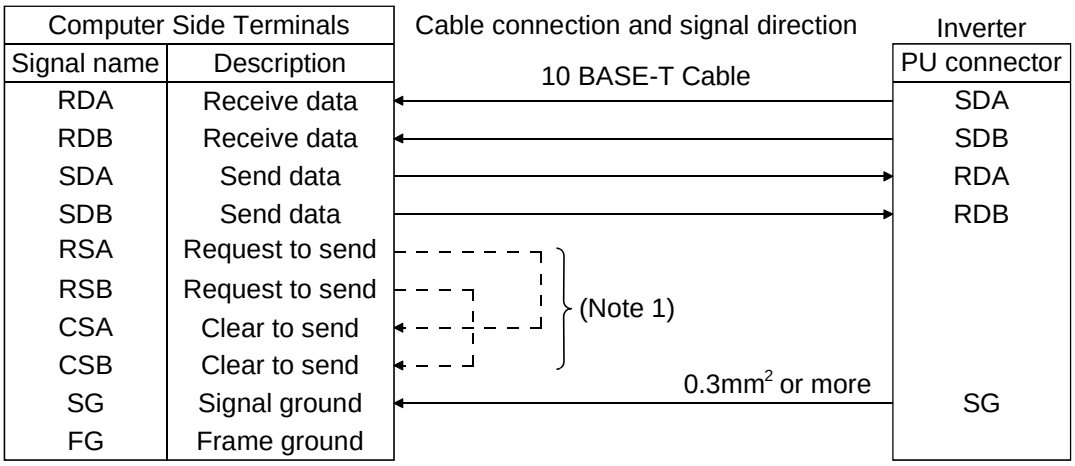

2) Wiring of one RS-485 computer and "n" inverters (several inverters)

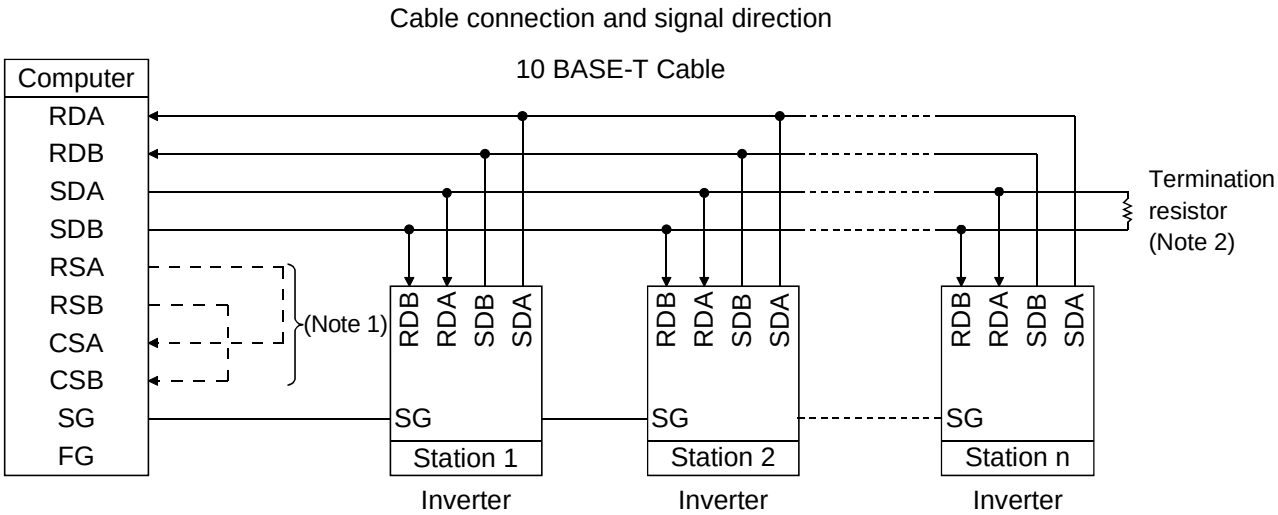

Note: 1. Make connections in accordance with the instruction manual of the computer used.
Fully check the terminal numbers of the computer as they differ between models.

2. There may be the influence of reflection depending on the transmission speed and/or transmission distance. If this reflection hinders communication, provide a termination resistor. If the PU connector is used to make a connection, use the distributor as a termination resistor cannot be fitted.
Connect the termination resistor to only the inverter remotest from the computer. (Termination resistor: 100Ω)

2.2.5 Connection of stand-alone option units

The inverter accepts a variety of stand-alone option units as required.
Incorrect connection will cause inverter damage or an accident. Connect and operate the option unit carefully in accordance with the corresponding option unit manual.

(1) Connection of the dedicated external brake resistor (option) (Cannot be connected to 0.1K and 0.2K)

Connect a brake resistor across terminals P (+) and PR. Connect a dedicated brake resistor only.
(For the positions of terminals P (+) and PR, refer to the terminal block layout (page 20).)

· FR-E520-0.4K to 0.75K, 5.5K, 7.5K-NA
· FR-E540-0.4K to 7.5K-NA
· FR-E510W-0.4K-NA

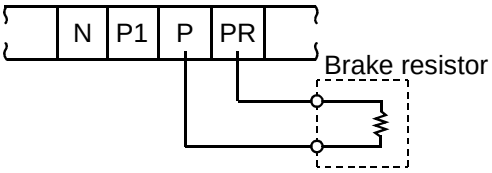

· FR-E520-1.5K to 3.7K-NA
· FR-E510W-0.75K-NA

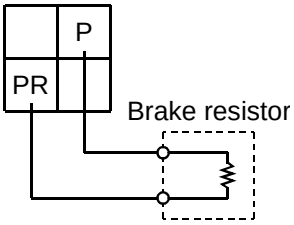

(2) Connection of the BU brake unit (option)

Connect the BU brake unit correctly as shown on the right. Incorrect connection will damage the inverter.

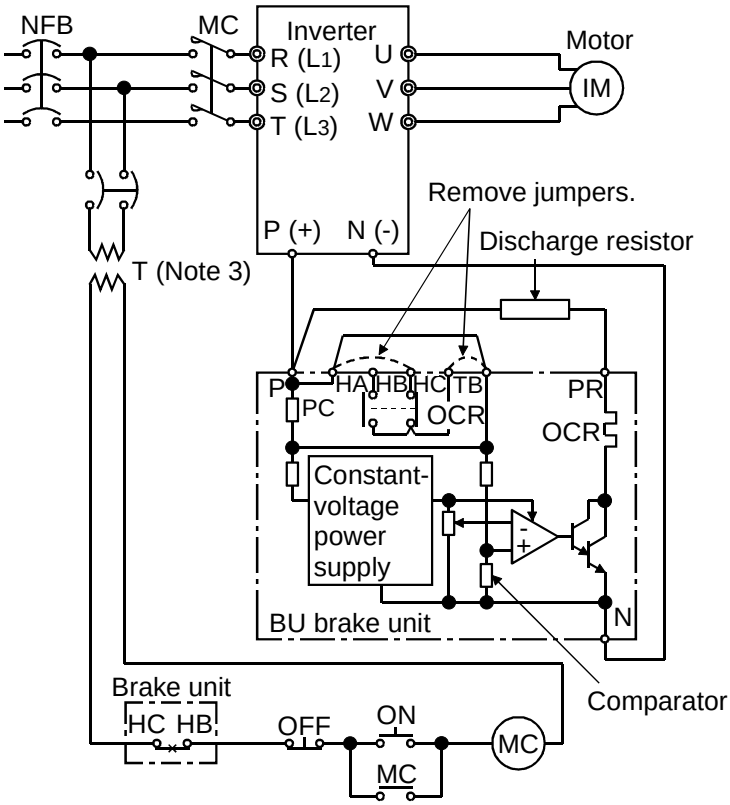

Note: 1. The wiring distance between the inverter, brake unit and discharge resistor should be within 2m (6.56 feet). If twisted wires are used, the distance should be within 5m (16.40 feet).

2. If the transistors in the brake unit should fail, the resistor will be extremely hot, causing a fire. Therefore, install a magnetic contactor on the inverter's power supply side to shut off current in case of failure.

3. When the power supply is 400V class, install a step-down transformer.

(3) Connection of the FR-HC high power factor converter (option unit)

When connecting the high power factor converter (FR-HC) to suppress power harmonics, wire as shown below. Wrong connection will damage the high power factor converter and inverter.

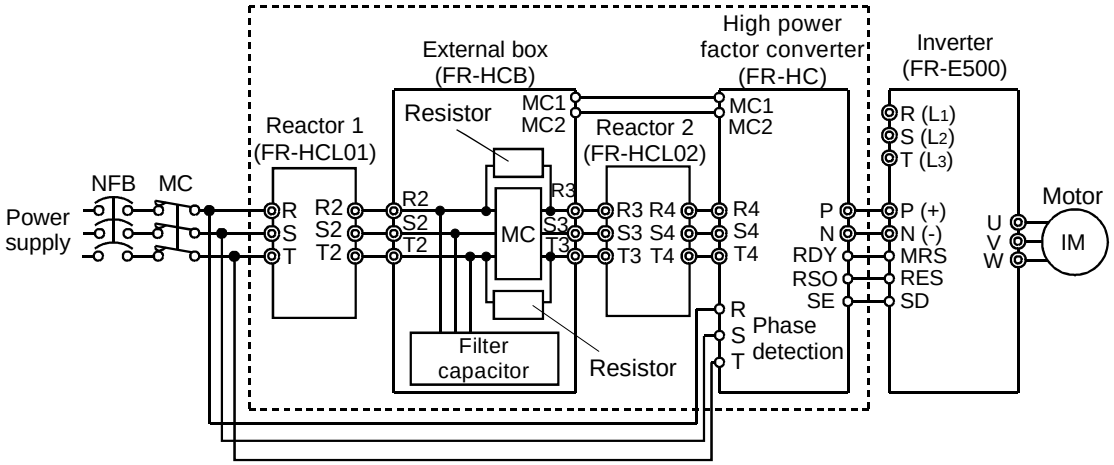

Note: 1. The power input terminals R, S, T (L_1, L_2, L_3) must be open.
Incorrect connection will damage the inverter. Reverse polarity of terminals N (–), P (+) will damage the inverter.
2. The voltage phases of terminals R, S, T (L_1, L_2, L_3) and terminals R4, S4, T4 must be matched before connection.
3. If the load capacity is less than half of the high power factor converter capacity, satisfactory harmonic suppression effects cannot be produced.

(4) Connection of the power factor improving DC reactor (option)

Connect the FR-BEL power factor improving DC reactor between terminals P1-P (+). In this case, the jumper connected across terminals P1-P (+) must be removed. Otherwise, the reactor will not function.

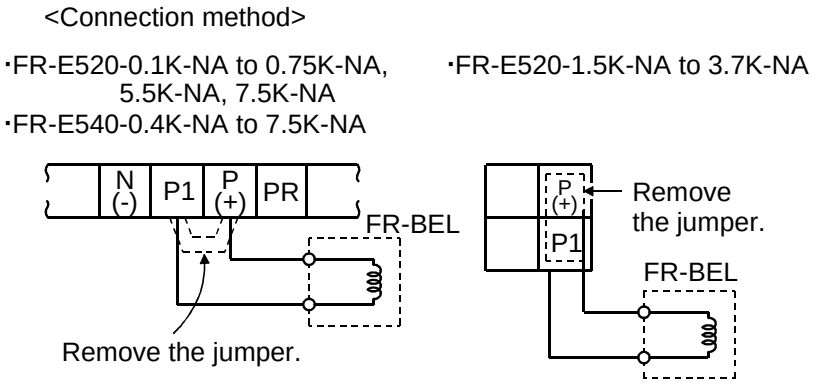

Note: 1. The wiring distance should be within 5m (16.40 feet).
2. The size of the cables used should be equal to or larger than that of the power supply cables (R (L_1), S (L_2), T (L_3)).

2.2.6 Design information

1) Provide electrical and mechanical interlocks for MC1 and MC2 which are used for commercial power supply-inverter switch-over.
   When there is a commercial power supply-inverter switch-over circuit as shown below, the inverter will be damaged by leakage current from the power supply due to arcs generated at the time of switch-over or chattering caused by a sequence error.

2) If the machine must not be restarted when power is restored after a power failure, provide a magnetic contactor in the inverter's primary circuit and also make up a sequence which will not switch on the start signal.
   If the start signal (start switch) remains on after a power failure, the inverter will automatically restart as soon as the power is restored.

3) Since the input signals to the control circuit are on a low level, use two or more parallel micro signal contacts or a twin contact for contact inputs to prevent a contact fault.

4) Do not apply a large voltage to the contact input terminals (e.g. STF) of the control circuit.

5) Always apply a voltage to the alarm output terminals (A, B, C) via a relay coil, lamp etc.

6) Make sure that the specifications and rating match the system requirements.

1) Commercial power supply-inverter switch-over

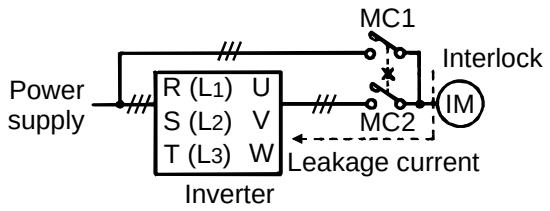

3) Low-level signal contacts

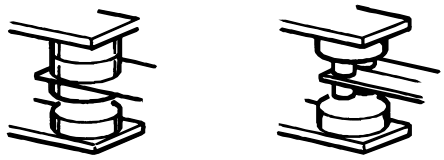

Low-level signal contacts Twin contact

2.3 Other Wiring

2.3.1 Power supply harmonics

Power supply harmonics may be generated from the converter section of the inverter, affecting the power supply equipment, power capacitor, etc. Power supply harmonics are different in generation source, frequency band and transmission path from radio frequency (RF) noise and leakage currents. Take the following counter measures.

- **The differences between harmonics and RF noises are indicated below:**

Item	Harmonics	RF Noise
Frequency	Normally 40th to 50th degrees, (up to 3kHz) or less	High frequency (several 10kHz to MHz order)
Environment	To wire paths, power impedance	Across spaces, distance, laying paths
Quantitative understanding	Logical computation is possible	Occurs randomly, quantitative understanding is difficult.
Generated amount	Approximately proportional to load capacity	According to current fluctuation rate (larger with faster switching)
Immunity of affected device	Specified in standards for each device.	Differs according to maker's device specifications.
Examples of safeguard	Install a reactor.	Increase the distance.

- **Countermeasures**

The harmonic current generated from the inverter to the power supply differs according to various conditions such as the wiring impedance, whether a power factor improving reactor is used or not, and output frequency and output current on load side.
For the output frequency and output current, the adequate method is to obtain them under rated load at the maximum operating frequency.

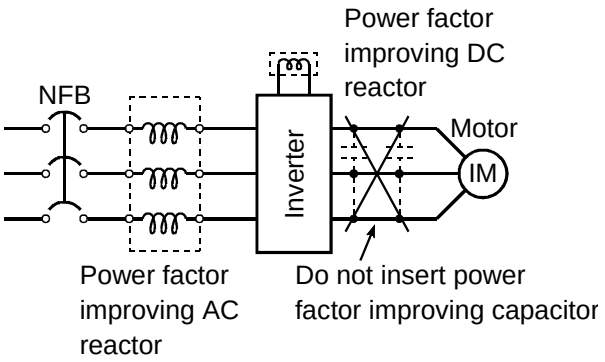

Note: A power factor improving capacitor and surge suppressor on the inverter's output side may overheat or be damaged due to the harmonics of the inverter output. Also, when an overcurrent flows in the inverter, the overcurrent protection is activated. Hence, when the motor is driven by the inverter, do not install a capacitor or surge suppressor on the inverter's output side. To improve the power factor, insert a power factor improving reactor in the inverter's input or DC circuit. For details, refer to the FR-A500/E500 series technical information

2.3.2 Inverter-generated noise and reduction techniques

Some noises enter the inverter causing it to incorrectly operate, and others are radiated by the inverter causing misoperation of peripheral devices. Though the inverter is designed to be insusceptible to noise, it handles low-level signals, so it requires the following basic measures to be taken. Also, since the inverter chops the output at high carrier frequencies, it could generate noise. If these noises cause peripheral devices to misoperate, measures should be taken to suppress noise. The measures differ slightly depending on noise propagation paths.

1) Basic measures
   - Do not run the power cables (I/O cables) and signal cables of the inverter in parallel with each other and do not bundle them.
   - Use twisted shield cables for the detector connecting and control signal cables and connect the sheathes of the shield cables to terminal SD.
   - Ground the inverter, motor, etc. at one point.

2) Measures against noise which enters and causes misoperation of the inverter
   When devices which generate noise (devices which use magnetic contactors, magnetic brakes, many relays, for example) are installed near the inverter, the inverter may misoperate due to noise. The following measures must be taken:
   - Provide surge suppressors for devices that generate noise to suppress noise.
   - Fit data line filters (refer to page 38) to signal cables.
   - Ground the shields of the detector connection and control signal cables with cable clamp metal.

3) Measures against noises which are radiated by the inverter causing misoperation of peripheral devices.
Inverter-generated noises are largely classified into those radiated by the cables connected to the inverter and inverter main circuit (I/O), those electromagnetically and electrostatically inducted to the signal cables of the peripheral devices close to the main circuit power supply, and those transmitted through the power supply cables.

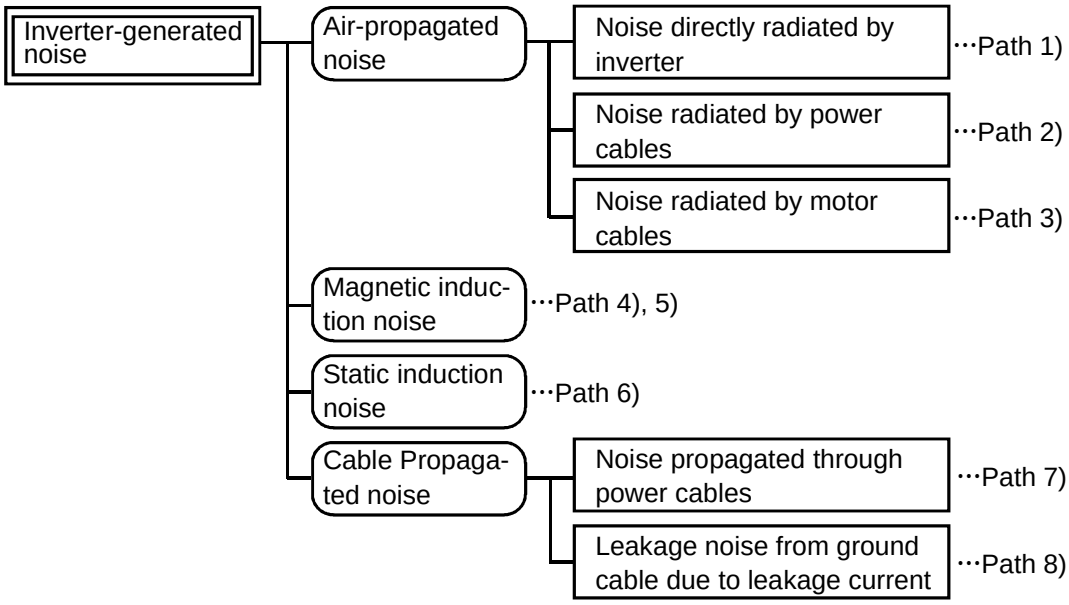

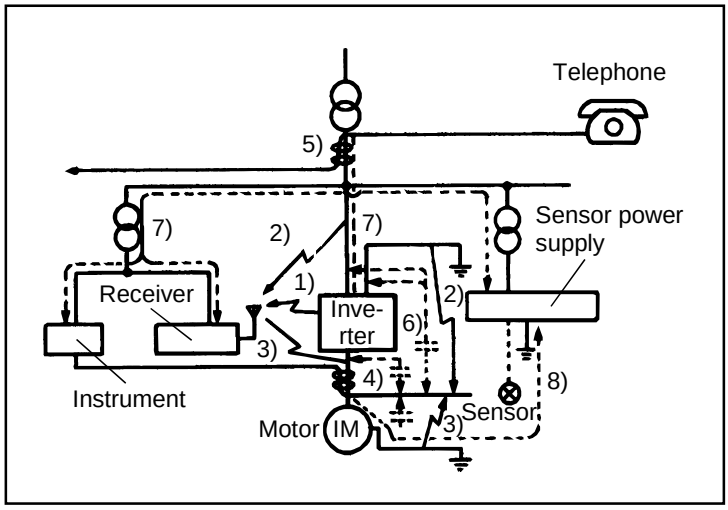

Noise Path	Measures
1), 2), 3)	When devices which handle low-level signals and are susceptible to misoperation due to noise (such as instruments, receivers and sensors) are installed near the inverter and their signal cables are contained in the same panel as the inverter or are run near the inverter, the devices may be misoperated by air-propagated noise and the following measures must be taken: (1) Install easily affected devices as far away as possible from the inverter. (2) Run easily affected signal cables as far away as possible from the inverter. (3) Do not run the signal cables and power cables (inverter I/O cables) in parallel with each other and do not bundle them. (4) Insert line noise filters onto I/O and radio noise filters into inputs to suppress cable-radiated noises. (5) Use shielded cables for signal cables and power cables and run them in individual metal conduits to further reduce effects.
4), 5), 6)	When the signal cables are run in parallel with or bundled with the power cables, magnetic and static induction noises may be propagated to the signal cables causing misoperation of the devices and the following measures must be taken: (1) Install easily affected devices as far away as possible from the inverter. (2) Run easily affected signal cables as far away as possible from the inverter. (3) Do not run the signal cables and power cables (inverter I/O cables) in parallel with each other and do not bundle them. (4) Use shielded cables for signal cables and power cables and run them in individual metal conduits to further reduce effects.
7)	When the power supplies of the peripheral devices are connected to the power supply of the inverter within the same line, inverter-generated noise may flow back through the power supply cables causing misoperation of the devices and the following measures must be taken: (1) Install the radio noise filter (FR-BIF) to the power cables (input cables) of the inverter. (2) Install the line noise filter (FR-BLF, FR-BSF01) to the power cables (I/O cables) of the inverter.
8)	When a closed loop circuit is formed by connecting the peripheral device wiring to the inverter, leakage current may flow through the ground cable of the inverter causing misoperation of the device. In such a case, disconnection of the ground cable of the device may cause the device to operate properly.

● Data line filter

Noise entry can be prevented by providing a data line filter for the detector or other cable.

● Data examples

By decreasing the carrier frequency, the noise terminal voltage* can be reduced. Use Pr. 72 to set the carrier frequency to a low value (1kHz). Though motor noise increases at a low carrier frequency, selection of Soft-PWM will make it unoffending.	By using shielded cables as signal cables, induction noise can be reduced greatly (1/10 to 1/100). Induction noise can also be reduced by moving the signal cables away from the inverter output cables. (Separation of 30cm (11.81 inches) reduces noise to 1/2 to 1/3.) By fitting the FR-BSF01 or BLF on the inverter output side, induction noise to the signal cables can be reduced.
Differences between noise terminal voltages at different carrier frequencies 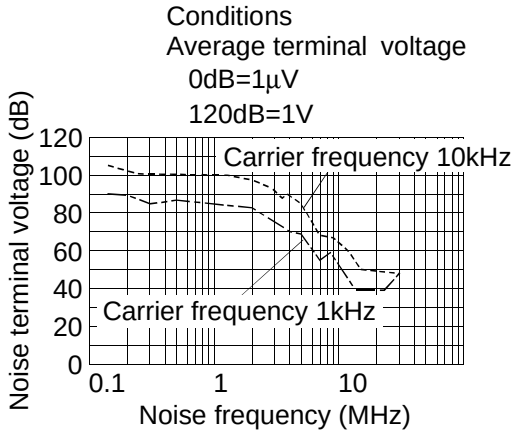 	Noise induced to signal cables by inverter output cables 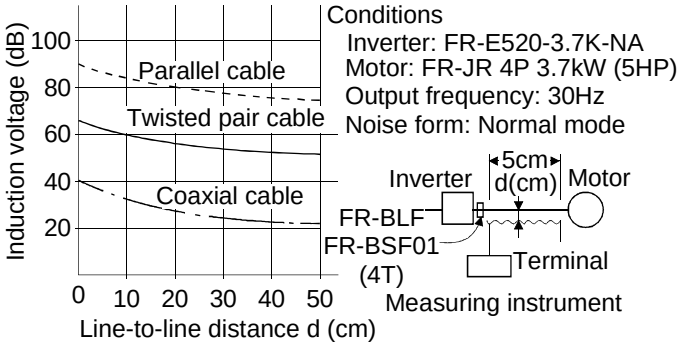

* Noise terminal voltage: Represents the magnitude of noise propagated from the inverter to the power supply.

● Example of counter measures against noise

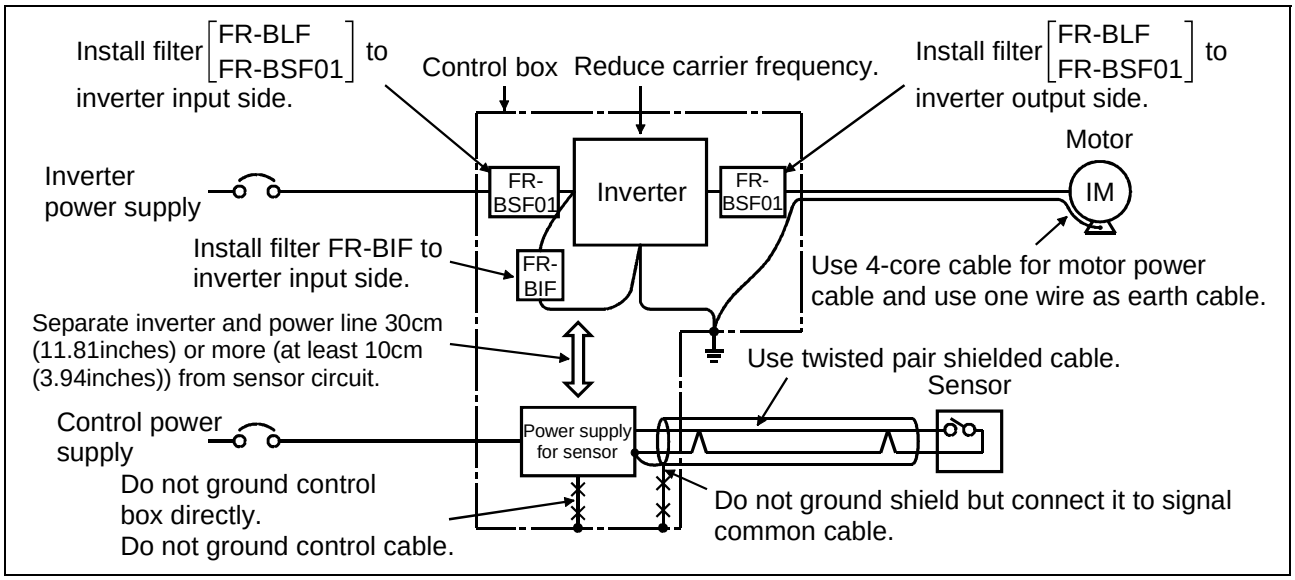

2.3.3 Leakage currents and countermeasures

Due to the static capacitance existing in the inverter I/O wiring and motor, leakage currents flow through them. Since their values depend on the static capacitance, carrier frequency, etc., take the following measures.

(1) To-ground leakage currents

Leakage currents may flow not only into the inverter's own line but also into the other lines through the ground cable, etc. These leakage currents may operate earth leakage circuit breakers and earth leakage relays unnecessarily.

- **Countermeasures**
  - If the carrier frequency setting is high, decrease the carrier frequency (Pr. 72) of the inverter.
    Note that motor noise increases. Selection of Soft-PWM (Pr. 240) will make it unoffending.
  - By using earth leakage circuit breakers designed for harmonic and surge suppression (e.g. Mitsubishi's Progressive Super Series) in the inverter's own line and other line, operation can be performed with the carrier frequency kept high (with low noise).

- **To-ground leakage current**
  - Note that a long wiring length will increase leakage currents. Decrease the carrier frequency of the inverter to reduce leakage currents.
  - Higher motor capacity leads to larger leakage currents. The leakage currents of the 400V class are higher than those of the 200V class.

(2) Line-to-line leakage currents

Harmonics of leakage currents flowing in static capacities between the inverter output cables may operate the external thermal relay unnecessarily.
When the wiring length is long (50m (164.04 feet) or more) for the 400V class models, the external thermal relay is likely to operate unnecessarily because the ratio of the leakage current to the rated motor current increases.

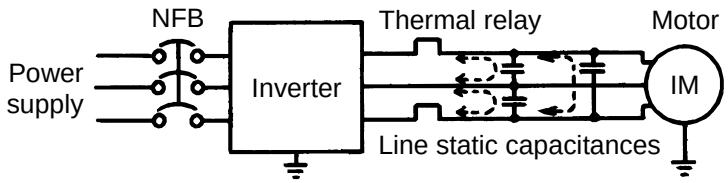

Line-to-line leakage current path

● **Countermeasures**

- Use the electronic overcurrent protection of the inverter.
- Decrease the carrier frequency. Note that motor noise increases. Selection of Soft-PWM will make it unoffending.
  To ensure that the motor is protected not to be influenced by line-to-line leakage currents, we recommend the protection method which uses a temperature sensor to directly detect motor temperature.

2.3.4 Inverter-driven 400V class motor

In the PWM type inverter, a surge voltage attributable to wiring constants is generated at the motor terminals. Especially for a 400V class motor, the surge voltage may deteriorate the insulation. When the 400V class motor is driven by the inverter, consider the following measures:

● **Measures**

It is recommended to take either of the following measures:

(1) Rectifying the motor insulation

For the 400V class motor, use an insulation-rectified motor. Specifically,

1) Specify the "400V class inverter-driven, insulation-rectified motor".
2) For the dedicated motor such as the constant-torque motor and low-vibration motor, use the "inverter-driven, dedicated motor".

(2) Suppressing the surge voltage on the inverter side

On the secondary side of the inverter, connect the optional surge voltage suppression filter (FR-ASF-H).

2.3.5 Peripheral devices

(1) Selection of peripheral devices

Check the capacity of the motor to be used with the inverter you purchased. Appropriate peripheral devices must be selected according to the capacity.
Refer to the following list and prepare appropriate peripheral devices:

	Inverter Type	Motor Output (kW (HP))	Power Supply Capacity (kVA)	No-Fuse Breaker (NFB) or Earth Leakage Circuit Breaker (NV) (Note5)		Magnetic Contactor (MC)		
				Standard	With power factor improving reactor	A	B	C
Three-phase 200V	FR-E520-0.1K-NA	0.1 (1/8)	0.4	30AF 5A	30AF 5A	S-N11	S-N18	S-N20
	FR-E520-0.2K-NA	0.2 (1/4)	0.8	30AF 5A	30AF 5A	S-N18	S-N20	S-N20
	FR-E520-0.4K-NA	0.4 (1/2)	1.5	30AF 5A	30AF 5A	S-N18	S-N21	S-N21
	FR-E520-0.75K-NA	0.75 (1)	2.5	30AF 10A	30AF 10A	S-N18	S-N21	S-N21
	FR-E520-1.5K-NA	1.5 (2)	4.5	30AF 15A	30AF 15A	S-N21	S-N25	S-N50
	FR-E520-2.2K-NA	2.2 (3)	5.5	30AF 20A	30AF 15A	S-N11,S-N12		
	FR-E520-3.7K-NA	3.7 (5)	9	30AF 30A	30AF 30A	S-N20		
	FR-E520-5.5K-NA	5.5 (7.5)	12	50AF 50A	50AF 40A	S-N25		
	FR-E520-7.5K-NA	7.5 (10)	17	100AF 60A	50AF 50A	S-N35		
Three-phase 400V	FR-E540-0.4K-NA	0.4 (1/2)	1.5	30AF 5A	30AF 5A	S-N10		
	FR-E540-0.75K-NA	0.75 (1)	2.5	30AF 5A	30AF 5A	S-N10		
	FR-E540-1.5K-NA	1.5 (2)	4.5	30AF 10A	30AF 10A	S-N10		
	FR-E540-2.2K-NA	2.2 (3)	5.5	30AF 15A	30AF 10A	S-N20		
	FR-E540-3.7K-NA	3.7 (5)	9	30AF 20A	30AF 15A	S-N20		
	FR-E540-5.5K-NA	5.5 (7.5)	12	30AF 30A	30AF 20A	S-N20		
	FR-E540-7.5K-NA	7.5 (10)	17	30AF 30A	30AF 30A	S-N20		
Single-phase 100V	FR-E510W-0.1K-NA	0.1 (1/8)	0.5	30AF 10A	30AF 10A	S-N18	S-N21	S-N21
	FR-E510W-0.2K-NA	0.2 (1/4)	0.9	30AF 15A	30AF 15A	S-N21	S-N25	S-N25
	FR-E510W-0.4K-NA	0.4 (1/2)	1.5	30AF 20A	30AF 20A	S-N21	S-N25	S-N50
	FR-E510W-0.75K-NA	0.75 (1)	2.5	30AF 30A	30AF 30A	S-N21	S-N25	S-N50

Note: 1. Select the type of the no-fuse breaker (NFB) in response to the power supply capacity.
2. The power supply cable size of the motor indicated assumes that its length is 20m (65.62 feet).
3. The inverter input side magnetic contactor to be chosen differs between the applicable ranges A, B and C shown on the right, depending on the power supply capacity and wiring length. For the FR-E520-0.4K to 1.5K-NA, FR-E510W-0.4K to 0.75K-NA, choose the S-N10 when the power factor improving reactor (FR-BEL or FR-BAL) is used.

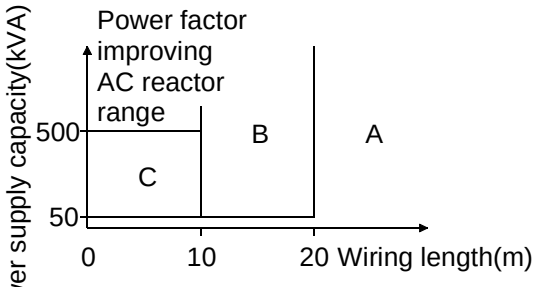

Note: Power supply used has the above recommended size.

4. When the inverter capacity is greater than the motor capacity, choose the breaker and magnetic contactor in accordance with the inverter type and choose the cables and power factor improving reactor in accordance with the motor output.
5. For installations in the United States or Canada, the circuit breaker must be inverse time or instantaneous trip type.

● Installation and selection of no-fuse breaker

Install a no-fuse breaker (NFB) in the power supply side for protection of the inverter's primary wiring. Refer to the previous table and choose the NFB according to the inverter's power supply side power factor (which changes with the power supply voltage, output frequency and load). Especially for a completely electromagnetic type NFB, the one with a larger capacity must be selected since its operational characteristics change with harmonic currents. (Check the data of the corresponding breaker for confirmation.) Also, the earth leakage circuit breaker used should be durable against harmonic/surge (such as the Progressive Super Series).

● Power factor improving reactor

	Inverter Model	Power Factor Improving AC Reactor	Power Factor Improving DC Reactor
Three-phase 200V	FR-E520-0.1K	FR-BAL-0.4K (Note 1)	FR-BEL-0.4K (Note 1)
	FR-E520-0.2K	FR-BAL-0.4K (Note 1)	FR-BEL-0.4K (Note 1)
	FR-E520-0.4K	FR-BAL-0.4K	FR-BEL-0.4K
	FR-E520-0.75K	FR-BAL-0.75K	FR-BEL-0.75K
	FR-E520-1.5K	FR-BAL-1.5K	FR-BEL-1.5K
	FR-E520-2.2K	FR-BAL-2.2K	FR-BEL-2.2K
	FR-E520-3.7K	FR-BAL-3.7K	FR-BEL-3.7K
	FR-E520-5.5K	FR-BAL-5.5K	FR-BEL-5.5K
	FR-E520-7.5K	FR-BAL-7.5K	FR-BEL-7.5K
Three-phase 400V	FR-E540-0.4K	FR-BAL-H0.4K	FR-BEL-H0.4K
	FR-E540-0.75K	FR-BAL-H0.75K	FR-BEL-H0.75K
	FR-E540-1.5K	FR-BAL-H1.5K	FR-BEL-H1.5K
	FR-E540-2.2K	FR-BAL-H2.2K	FR-BEL-H2.2K
	FR-E540-3.7K	FR-BAL-H3.7K	FR-BEL-H3.7K
	FR-E540-5.5K	FR-BAL-H5.5K	FR-BEL-H5.5K
	FR-E540-7.5K	FR-BAL-H7.5K	FR-BEL-H7.5K
Single-phase 100V	FR-E510W-0.1K	FR-BAL-0.75K (Note 1)	— (Note 2)
	FR-E510W-0.2K	FR-BAL-1.5K (Note 1)	— (Note 2)
	FR-E510W-0.4K	FR-BAL-2.2K (Note 1)	— (Note 2)
	FR-E510W-0.75K	FR-BAL-3.7K (Note 1)	— (Note 2)

Note: 1. The power factor may be slightly lower.
2. The single-phase 100V input models do not accept the power factor improving DC reactor.

When the inverter is connected near a large-capacity power supply transformer (500kVA or more, wiring length 10m (32.81 feet) maximum) or there is power capacitor switch-over, excessive peak currents may flow into the power input circuit and damage the converter circuit. In such a case, the power supply improving reactor (FR-BEL or FR-BAL) must be installed.

When the FR-E510W-0.4K-NA is connected to a single-phase 100V class output power transformer (in excess of 50kVA capacity), install the power factor improving reactor (FR-BAL-2.2K) to improve reliability.

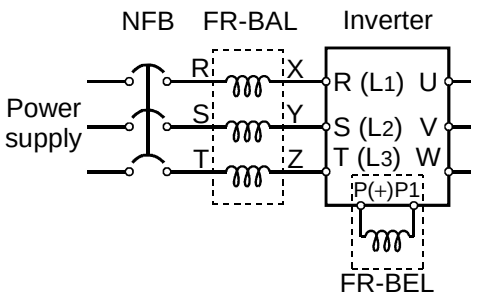

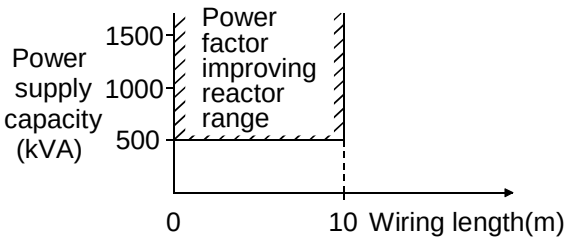

(2) Selecting the rated sensitivity current for the earth leakage circuit breaker

When using the earth leakage circuit breaker with the inverter circuit, select its rated sensitivity current as follows, independently of the PWM carrier frequency:

Example of leakage current per 1km in cable path during commercial power supply operation when the CV cable is routed in metal conduit (200V 60Hz)

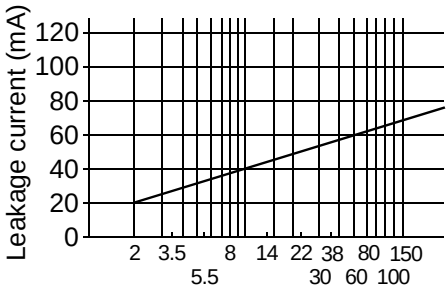

Cable size (mm²)

Leakage current example of 3-phase induction motor during commercial power supply operation (200V 60Hz)

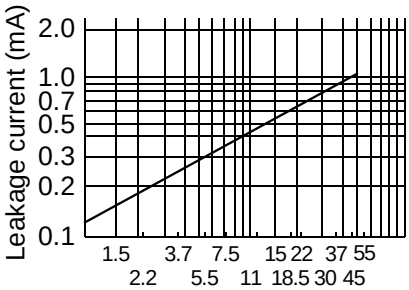

Motor capacity (kW)

- Progressive Super series (Type SP, CF, SF, CP)
  Rated sensitivity current: $I\Delta n \geq 10 \times (Ig1+Ign+Ig2+Igm)$
- Conventional NV series (Type CA, CS, SS produced prior to ′91)
  Rated sensitivity current: $I\Delta n \geq 10 \times \{Ig1+Ign+3\times(Ig2+Igm)\}$

Ig1, Ig2 : Leakage currents of cable path during commercial power supply operation
Ign* : Leakage current of noise filter on inverter input side
Igm : Leakage current of motor during commercial power supply operation

2

<Example>

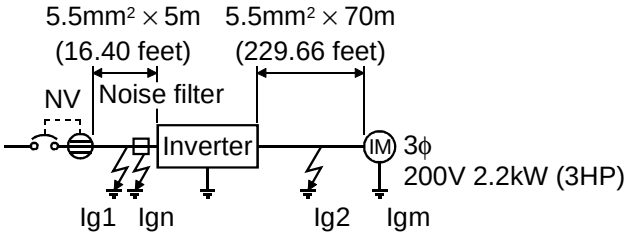

Note: 1. The earth leakage circuit breaker should be installed to the primary (power supply) side of the inverter.

2. Ground fault in the secondary side of the inverter can be detected at the running frequency of 120Hz or lower.

3. In the ⅄ connection neutral point grounded system, the sensitivity current becomes worse for ground faults in the inverter secondary side. Hence, the protective grounding of the load equipment should be 10Ω or less.

4. When the breaker is installed in the secondary side of the inverter, it may be unnecessarily operated by harmonics if the effective value is less than the rating. In this case, do not install the breaker since the eddy current and hysteresis loss increase and the temperature rises.

* Note the leakage current value of the noise filter installed on the inverter input side.

	Progressive Super series (Type SP, CF, SF, CP)	**Conventional NV (Type CA, CS, SS)**
Leakage current (Ig1) (mA)	$33 \times \frac{5\text{m (16.40 feet)}}{1000\text{m (3280.80 feet)}} = 0.17$	
Leakage current (Ign) (mA)	0 (without noise filter)	
Leakage current (Ig2) (mA)	$33 \times \frac{70\text{m (229.66 feet)}}{1000\text{m (3280.80 feet)}} = 2.31$	
Motor leakage current (Igm) (mA)	0.18	
Total leakage current (mA)	2.66	7.64
Rated sensitivity current (mA) (≥ Ig × 10)	30	100

2.3.6 Instructions for compliance with U.S and Canadian Electrical Codes

(Standard to comply with: UL 508C)

(1) Installation

The above types of inverter have been approved as products for use in enclosure and approval tests were conducted under the following conditions. For enclosure design, refer to these conditions so that the ambient temperature of the inverter is 50°C (122°F) or less.

● **200V class, 100V class**

Inverter Type	Cabinet (enclosure) Size (Unit: mm (inches))	Vent Hole Area	Cooling Fan
FR-E520-3.7K-NA	W H D 255×192×218 (10.04×7.56×8.58)	• 55% of both the side of the Cabinet • Width of each slit: 3.2mm (0.12 inches) • To be provided on each of the upper side areas.	Installed at the enclosure top to suck air from inside the enclosure to the outside. (Fan air flow: 2 × 0.59m^3/min or more)

● **400V class**

Design the enclosure so that the ambient temperature, humidity and ambience of the inverter will satisfy the above specifications. (Refer to page 195)

(2) Branch circuit protection

For installation in United States, branch circuit protection must be provided, in accordance with the National Electrical Code and any applicable local codes.
For installation in Canada, branch circuit protection must be provided in accordance with the Canada Electrical Code and any applicable provincial codes.

(3) Short circuit ratings

Suitable For Use In A Circuit Capable of Delivering Not More Than 5kA rms Symmetrical Amperes.

(4) Wiring of the power supply and motor

Use the UL-listed cables (rated at 75°C (167°F)) and round crimping terminals to wire the input (R (L_1), S (L_2), T (L_3)) and output (U, V, W) terminals of the inverter. Crimp the terminals with the crimping tool recommended by the terminal manufacturer.

(5) Motor overload protection

When using the electronic overcurrent protection function as motor overload protection, set the rated motor current in Pr.9 "electronic thermal O/L relay".
When connecting two or more motors to the inverter, install external thermal relays for individual motors.

Reference: Motor overload protection characteristics

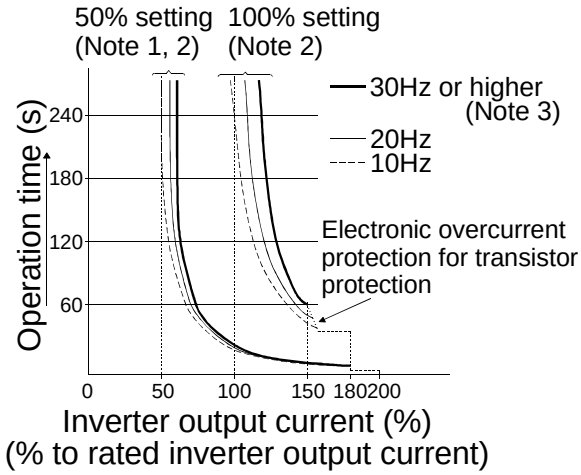

- Protection activating range
  Range on the right of characteristic curve
- Normal operating range
  Range on the left of characteristic curve

(Note 1) When you set the 50% value (current value) of the rated inverter output current.
(Note 2) The % value denotes the percentage of the current value to the rated inverter output current, not to the rated motor current.
(Note 3) This characteristic curve will be described even under operation of 6Hz or higher when you set the electronic overcurrent protection dedicated to the Mitsubishi constant-torque motor.

2.3.7 Instructions for compliance with the European standards

(The products conforming to the Low Voltage Directive carry the CE mark.)

(1) EMC Directive

1) Our view of transistorized inverters for the EMC Directive
A transistorized inverter is a component designed for installation in a control box and for use with the other equipment to control the equipment/device. Therefore, we understand that the EMC Directive does not apply directly to transistorized inverters. For this reason, we do not place the CE mark on the transistorized inverters. (The CE mark is placed on inverters in accordance with the Low Voltage Directive.) The European power drive manufacturers' organization (CEMEP) also holds this point of view.

2) Compliance
We understand that the transistorized inverters are not covered directly by the EMC Directive. However, the EMC Directive applies to machines/equipment into which transistorized inverters have been incorporated, and these machines and equipment must carry the CE marks. Hence, we prepared the technical information "EMC Installation Guidelines" (information number BCN-A21041-202) so that machines and equipment incorporating transistorized inverters may conform to the EMC Directive more easily.

3) Outline of installation method
Install an inverter using the following methods:
* Use the inverter with an European Standard-compliant noise filter.
* For wiring between the inverter and motor, use shielded cables or run them in a metal piping and ground the cables on the inverter and motor sides with the shortest possible distance.
* Insert a line noise filter and ferrite core into the power and control lines as required.
  Full information including the European Standard-compliant noise filter specifications are written in the technical information "EMC Installation Guidelines" (BCN-A21041-202). Please contact your sales representative.

(2) Low Voltage Directive

1) Our view of transistorized inverters for the Low Voltage Directive
   Transistorized inverters are covered by the Low Voltage Directive (Standard to comply with: DIN VDE0160 (200V class), EN50178 (400V class, 100V class)).
2) Compliance
   We have self-confirmed our inverters as products compliant to the Low Voltage Directive and place the CE mark on the inverters.
3) Outline of instructions
   * In the 400V class inverters, the rated input voltage range is three-phase, 380V to 415V, 50Hz/60Hz.
   * Connect the equipment to the earth securely. Do not use an earth leakage circuit breaker as an electric shock protector without connecting the equipment to the earth.
   * Wire the earth terminal independently. (Do not connect two or more cables to one terminal.)
   * The wire size on pages 19 and 21 are shown for following conditions
     • Ambient Temp : 40°C (104°F) maximum
     • Wire installation : On wall without ducts or conduits
     If conditions are different from above, select appropriate wire according to EN 60204 ANNEX C TABLE 5.
   * Use the no-fuse breaker and magnetic contactor which conform to the EN or IEC Standard.
     Design notice : Where residual-current-operated protective device (RCD) is used for protection in case of direct or indirect contact, only RCD of Type B is allowed on the supply side of this Electronic Equipment (EE). Otherwise another protective measure shall be applied such as separation of the EE from the environment by double or reinforced insulation or isolation of EE and supply system by a transformer. (Extract from EN51078)
   * Use the inverter under the conditions of overvoltage category II and contamination level 2 or higher specified in IEC664.
     (a) To meet the overvoltage category II, insert an EN or IEC standard-compliant earthed star connection isolation transformer in the input of the inverter.
     (b) To meet the contamination level 2, install the inverter in a control box protected against ingress of water, oil, carbon, dust, etc. (IP54 or higher).
   * On the input and output of the inverter, use cables of the type and size set forth in EN60204 Appendix C.
   * The operating capacity of the relay outputs (terminal symbols A, B, C) should be 30VDC, 0.3A.
   * The terminals indicated as the input and output terminals for control circuit on page 14 are isolated safely from the main circuit.
     Environment

	During operation	In storage	During Transportation
Ambient Temperature	-10°C to +50°C (14°F to 122°F)	-20°C to +65°C (-4°F to 149°F)	-20°C to +65°C (-4°F to 149°F)
Ambient Humidity	90%RH or less	90%RH or less	90%RH or less
Ambient Altitude	1,000m (3280.80feet)	1,000m (3280.80feet)	10,000m (32808.00feet)

Details are given in the technical information "Low Voltage Directive Conformance Guide" (BCN-A21041-203). Please contact your sales representative.

CHAPTER 3

OPERATION/CONTROL

This chapter provides the basic "operation/control" for use of this product.
Always read this chapter before using the equipment.

3.1 Pre-Operation Information 48
3.2 About the Control Panel..... 51
3.3 Operation..... 58

3.1 Pre-Operation Information

3.1.1 Types of operation modes

The inverter can be operated in any of "PU operation mode", "external operation mode", "combined operation mode" and "communication operation mode". Prepare required instruments and parts according to the operation mode. For the way of changing the operation mode, refer to page 54.

(1) External operation mode (factory setting Pr. 79 "operation mode selection" = 0)

Pr. 79 "operation mode selection" is factory-set to 0 and the external operation mode is selected at power-on.
The inverter is operated using an external start signal and an external frequency setting signal.

Preparation

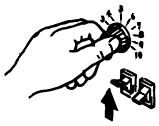

- Start signal ..... Switch, relay, etc.
- Frequency setting signal .... 0 to 5V, 0 to 10V or 4 to 20mA DC signals or multiple speeds from a potentiometer or outside the inverter

Note: 1. Operation cannot be started by the start signal alone. Both the start signal and frequency setting signal are required to run the inverter.

(2) PU operation mode (Pr. 79 "operation mode selection" = 1)

How to perform operation using the optional control panel or parameter unit

Preparation

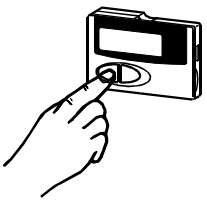

- Operation unit..... Control panel (FR-PA02-02) or parameter unit (FR-PU04)
- Connection cable..... To be prepared for use of the control panel (FR-PA02-02) away from the inverter or for use of the parameter unit (FR-PU04).
  FR-CB2□□ (option)
- FR-E5P (option) ..... To be prepared for use of the control panel away from the inverter. It is available as a set of control panel cover and connection cable junction adaptor.

(3) Combined operation mode 1 (Pr. 79 "operation mode selection" = 3)

The start signal is an external signal.
The frequency setting signal is set using the optional control panel or parameter unit.

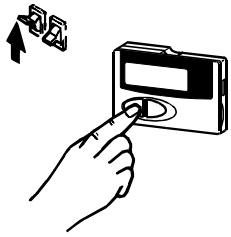

Preparation

- Start signal .....Switch, relay, etc.
- Operation unit.....Control panel (FR-PA02-02) or parameter unit (FR-PU04)
- Connection cable.....Refer to (1) PU operation mode.
- FR-E5P (option) .....Refer to (1) PU operation mode.

(4) Combined operation mode 2 (Pr. 79 "operation mode selection" = 4)

The start signal is entered from the operation command key of the optional control panel.
The frequency setting signal is set using the external frequency setting signal.

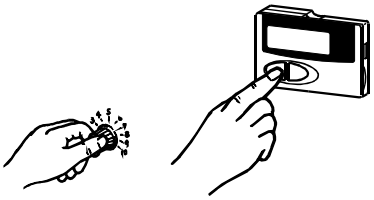

Preparation

- Frequency setting signal .....0 to 5V, 0 to 10V or 4 to 20mA DC signals from an external potentiometer or from outside the inverter
- Operation unit.....Control panel (FR-PA02-02) or parameter unit (FR-PU04)
- Connection cable.....Refer to (1) PU operation mode.
- FR-E5P (option) .....Refer to (1) PU operation mode.

(5) Communication operation mode (Pr. 79 "operation mode selection" = 0 or 1)

Communication operation can be performed by connecting a personal computer and the PU connector with the RS-485 communication cable.
The inverter setup software is available as an FR-E500 inverter start-up support software package.

Preparation

- Connection cable.....Connector: RJ45 connector
  Cable: Cable conforming to EIA568 (e.g. 10BASE-T cable)
- Personal computer
- RS-485, RS-232C converter.....To be prepared when the communication port of the personal computer has RS-232C specifications.

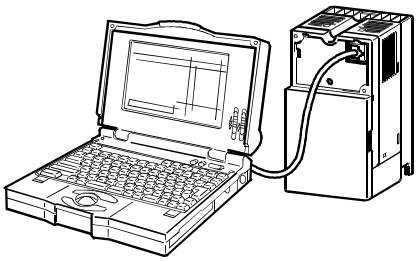

3.1.2 Power on

Before switching power on, check the following.

● Installation check

Make sure that the inverter is installed correctly in a proper location. (Refer to page 12.)

● Wiring check

Make sure that the main and control circuits are wired correctly.
Make sure that the options and peripheral devices are selected and connected correctly. (Refer to page 14.)

● Switch power on.

Power-on is complete if the POWER lamp is lit to give a correct indication and the ALARM lamp is off.

3.2 About the Control Panel

With the optional control panel (FR-PA02-02), you can run the inverter, set the frequency, monitor the operation command display, set parameters, and display an error.

3.2.1 Names and functions of the control panel (FR-PA02-02)

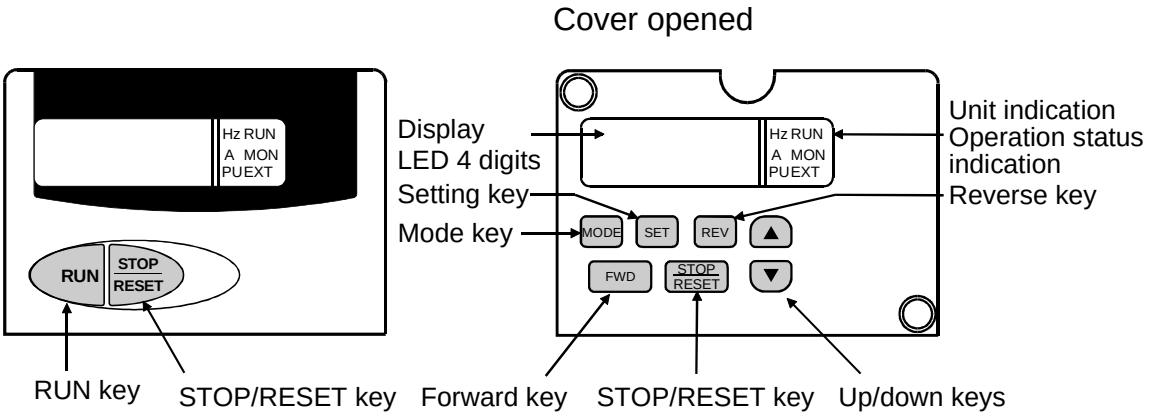

● Key indication

Key	Description
RUN key	Used to give a start rotation command.
MODE key	You can select the operation mode or setting mode.
SET key	You can determine the frequency and parameter setting.
▲/▼ key	• Used to increase or decrease the running frequency consecutively. Hold down this key to change the frequency. • Press this key in the setting mode to change the parameter setting consecutively.
FWD key	Used to give a forward rotation command.
REV key	Used to give a reverse rotation command.
STOP RESET key	• Used to stop operation. • Used to reset the inverter when its output is stopped by the activated protective function.

● Unit indications, operating status indications

Indication	Description
Hz	Lit to indicate the frequency.
A	Lit to indicate the current.
RUN	Lit while the inverter is operating. Lit to indicate forward rotation, and flickers to indicate reverse rotation.
MON	Lit in the monitor display mode.
PU	Lit in the PU operation mode.
EXT	Lit in the external operation mode.

3.2.2 Control panel mode is changed by pressing the MODE key

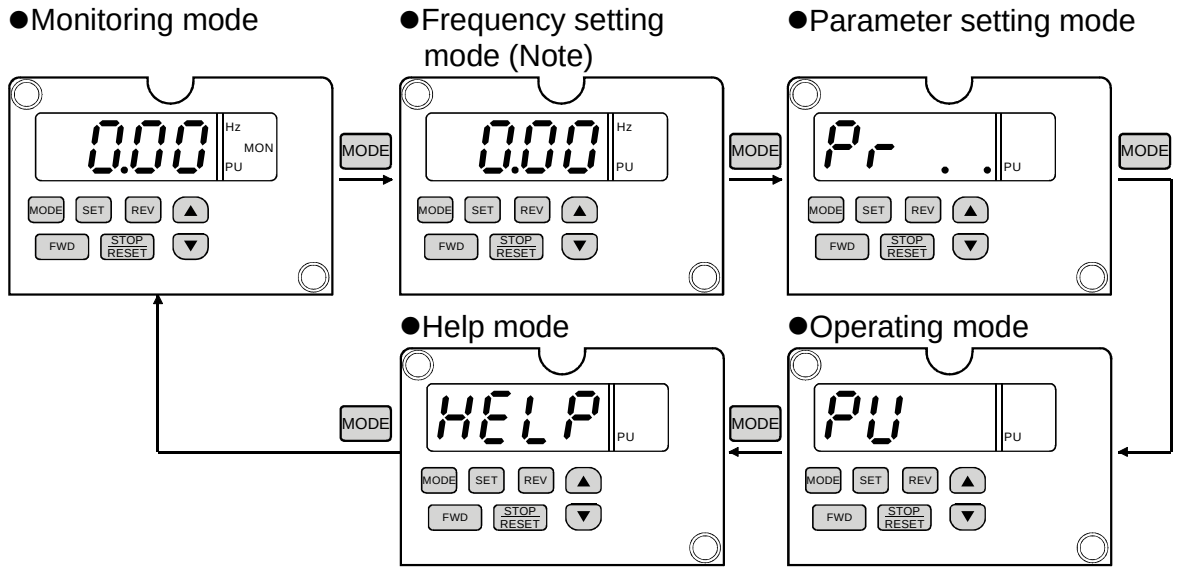

(Note) The frequency setting mode is displayed only in the PU operation mode.

3.2.3 Monitoring

- Operation command indications given while a monitor display is being provided
  EXT is lit to indicate external operation.
  PU is lit to indicate PU operation.
  Both EXT and PU are lit to indicate combined operation.
- The monitor display can also be changed during operation.

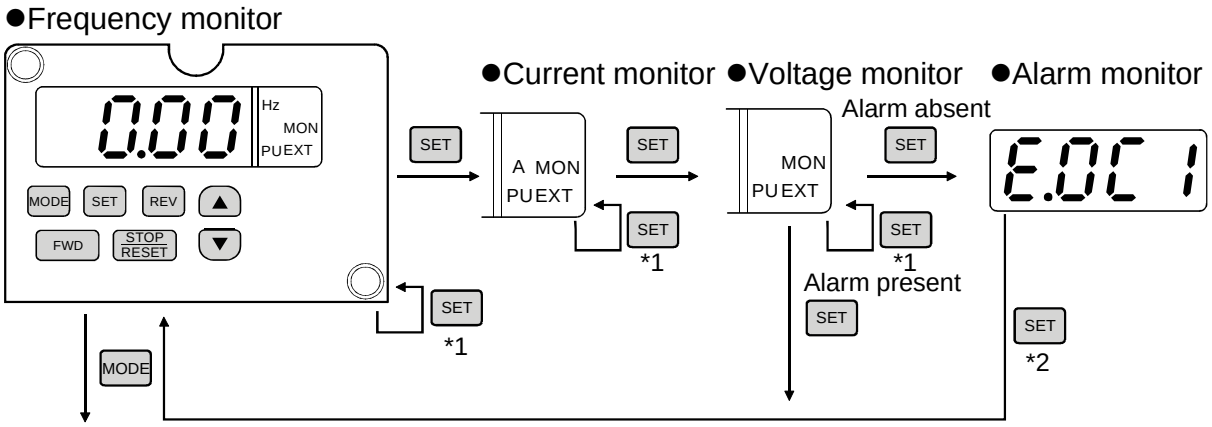

To 3.2.4 Frequency setting mode (Note3)

Note: 1. Hold down the SET key marked *1 for more than 1.5 seconds to change the current monitor to the power-on monitor.
2. Hold down the SET key marked *2 for more than 1.5 seconds to display four errors including the most recent one.
3. To the parameter setting mode when in the external operation mode.

3.2.4 Frequency setting

In the PU operation mode, set the frequency value used for operation performed under the operation command given by the RUN key (FWD or REV key).
This mode is displayed only in PU operation.

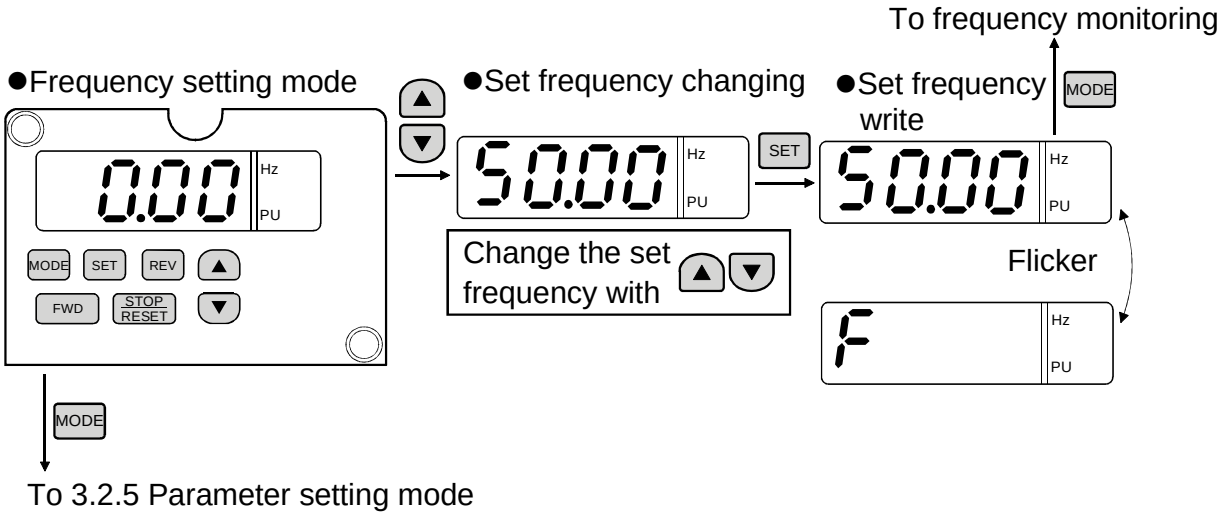

3.2.5 Parameter setting method

With the exception of some parameters, parameter setting can be made only when the PU operation mode is selected by the Pr. 79 setting.

- A parameter value may either be set by updating its parameter number or setting the value digit-by-digit using the ▲ / ▼ key.
- To write the setting, change it and press the SET key for about 1.5 seconds.

Note: If parameter write cannot be performed, refer to page 177.

(1) Example: To change the Pr. 79 "operation mode selection" setting from "2" (external operation mode) to "1" (PU operation mode)

(For details of Pr. 79, refer to page 110.)

Press the MODE key, to choose the parameter setting mode.

●Parameter setting mode

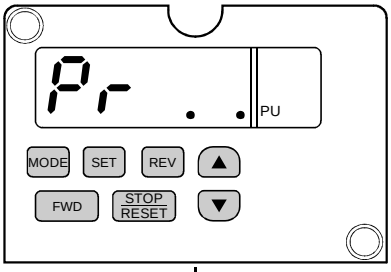

MODE

To 3.2.6 Operation mode

SET → Most significant digit flickers → SET → Middle digit flickers → Least significant digit flickers

P.000 → P.000 → P.070

P.000: ▲ ×7 times or ▼ ×3 times → P.070

P.070: ▲ ×9 times or ▼ ×1 times → P.079

P.070: 0 to 9 → SET → P.079: 0 to 9

●Current setting ●Setting change

SET → 2 → ▼ → 1

Press for 1.5s SET

●Setting write

1 ---- When Err appears

1) If the RUN indication is lit or flickering, stop operation by pressing the STOP RESET key or turning off the forward rotation (STF) or reverse rotation (STR) signal connected to the control terminal.

2) You cannot set any value that is outside the parameter setting range. Write a value within the setting range.

RUN

Flicker

P. 79 ---- "1" (PU operation mode) has been set in Pr. 79. If the value and P. 79 do not flicker but P. 80 appears, you did not press the SET key for 1.5 seconds when writing the value.

Press the ▼ key once, press the SET key, and restart the setting from the beginning.

3.2.6 Operation mode

The operation mode change method which is shown below is only allowed when Pr. 79 "operation mode selection" is "0".

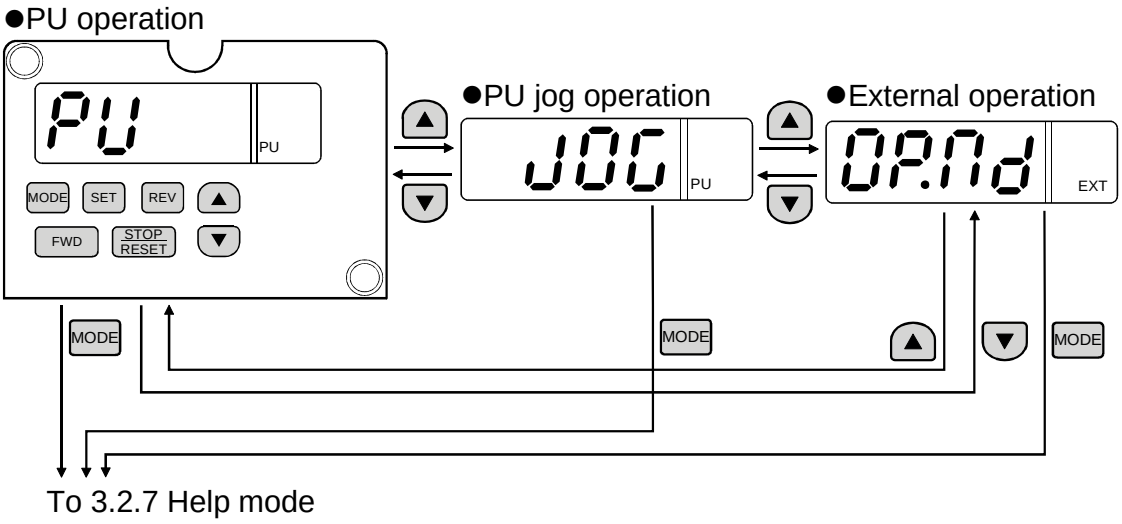

Note: If the operation mode cannot be changed, refer to page 177.

3.2.7 Help mode

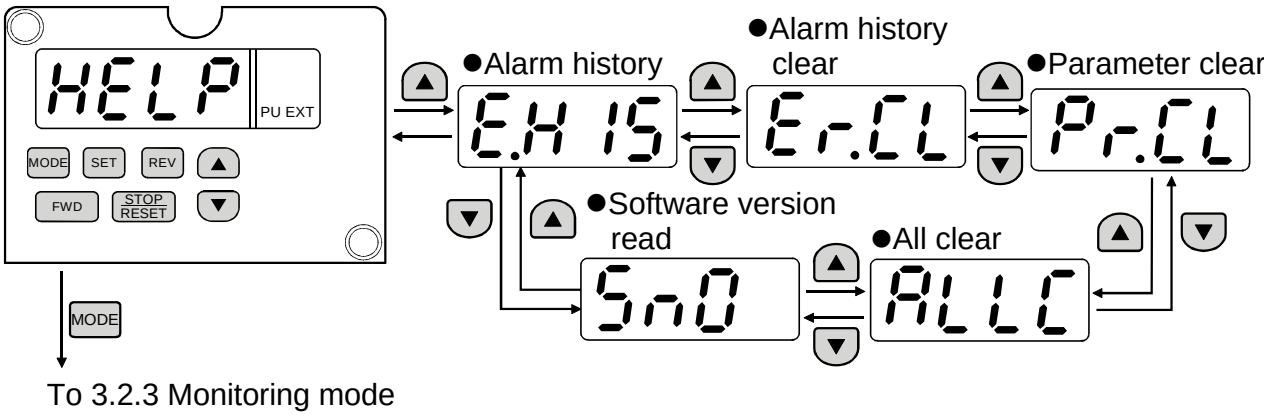

(1) Alarm history

Four past alarms can be displayed with the ▲ / ▼ key.
(".." is appended to the most recent alarm.)
When no alarm exists, E._ _0 is displayed.

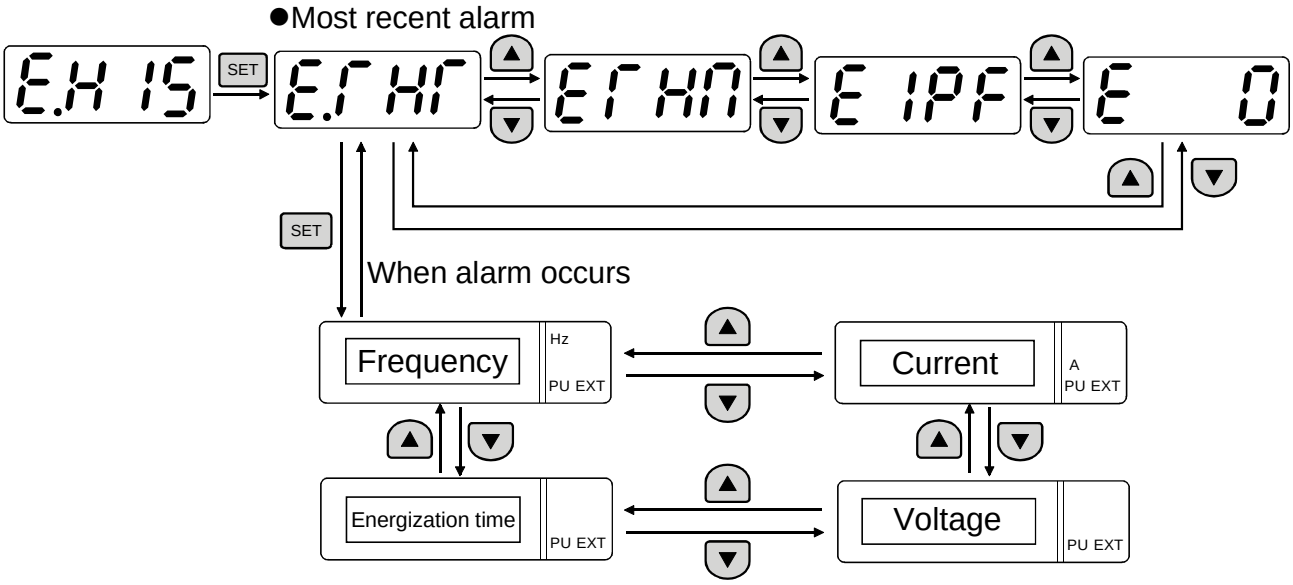

(2) Alarm history clear

Clears all alarm history.

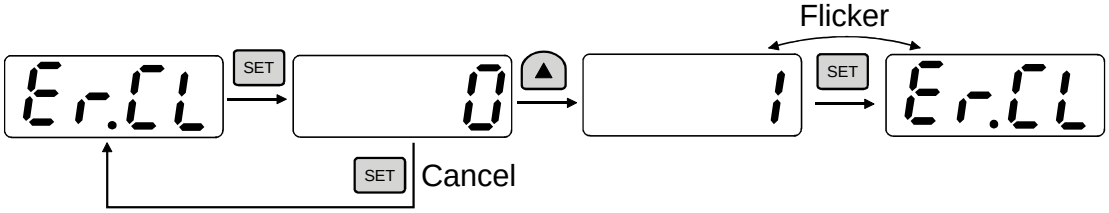

(3) Parameter clear

Initializes the parameter values to the factory settings. The calibration values are not initialized.
(Parameter values are not cleared by setting "1" in Pr. 77 "parameter write disable selection")

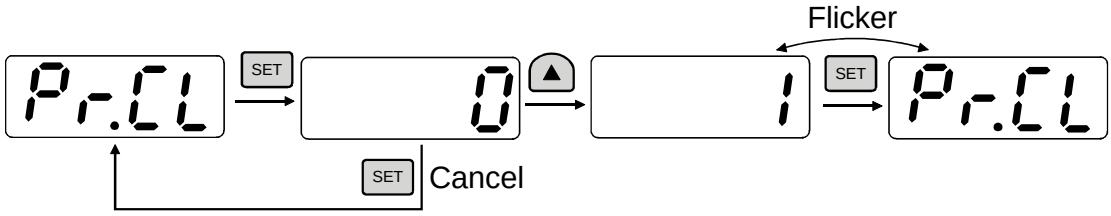

Note: 1. In the FR-E520-0.1K to 7.5K-NA and FR-E510W-0.1K to 0.75K-NA, Pr. 122 "communication check time interval" setting is "0". (Factory setting: 9999)
2. The Pr. 75, Pr. 180 to Pr. 183, Pr. 190 to Pr. 192, and Pr. 900 to Pr. 905 values are not initialized.

(4) All clear

Initializes the parameter values and calibration values to the factory settings.

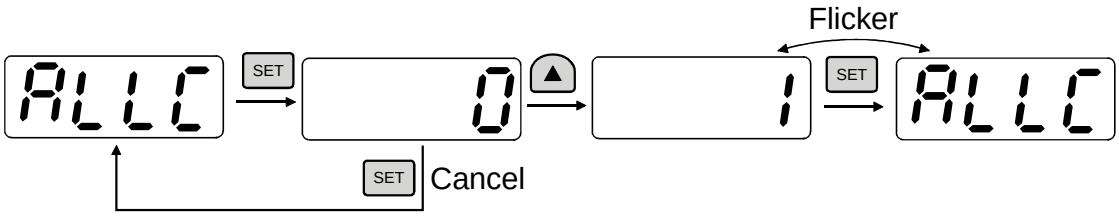

Note: 1. In the FR-E520-0.1K to 7.5K-NA and FR-E510W-0.1K to 0.75K-NA, Pr. 122 "communication check time interval" setting is "0". (Factory setting: 9999)
2. The Pr. 75 value is not initialized.

3.3 Operation

3.3.1 Pre-operation checks

Before starting operation, check the following:

- Safety
  Perform test operation after making sure that safety is ensured if the machine should become out of control.

- Machine
  Make sure that the machine is free of damage.

- Parameters
  Set the parameter values to match the operating machine (system) environment.

- Test operation
  Perform test operation and make sure that the machine operates safely under light load at a low frequency. After that, start operation.
  Since the Pr. 240 "Soft-PWM setting" value is factory-set to select Soft-PWM control, the tone is different from that in the conventional non-low acoustic noise mode, this is not a fault.

3.3.2 External operation mode (Operation using the external frequency setting potentiometer and external start signal)

(1) Operation at 60Hz

Operation command: Externally connected start signal.
Frequency setting: Externally connected frequency setting potentiometer

Step	Description	Image
1	Power on → Operation mode check With the factory setting, the external operation mode is selected and the [EXT] indication is lit when power is switched on. If the [EXT] indication is not lit, refer to page 54 and set "2" in Pr. 79.	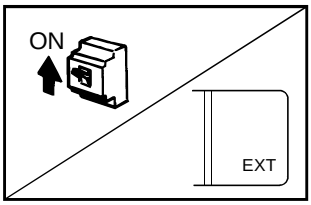
2	Start Set the start switch (STF or STR) to ON. The [RUN] indication is lit to indicate forward rotation, or flickers to indicate reverse rotation. Note: The motor does not start if both the forward and reverse rotation switches are turned on. If both switches are turned on during operation, the motor decelerates to a stop.	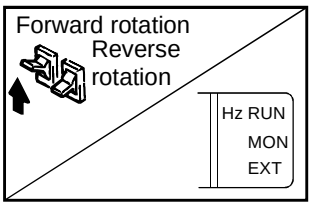
3	Acceleration → Constant speed Slowly turn the potentiometer connected across terminals 2-5 (frequency setting potentiometer) fully clockwise. The frequency shown on the display increases gradually to 60.00Hz.	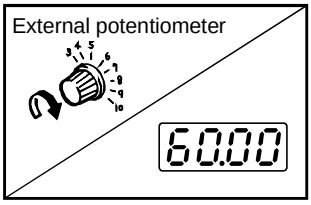
4	Deceleration Slowly turn the potentiometer connected across terminals 2-5 (frequency setting potentiometer) fully counterclockwise. The frequency shown on the display decreases gradually to 0.00Hz. The motor stops running.	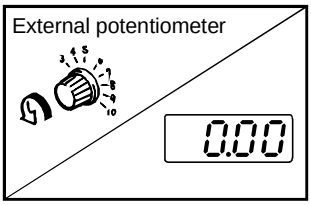
5	Stop Turn off the start switch (STF or STR).	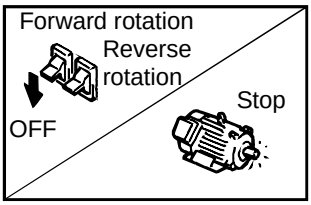

<Reference> If other frequency is required at fully clockwise position, change Pr. 38 "Frequency at 5V (10V)" setting.
(Refer to page 160)

3.3.3 PU operation mode (Operation using the control panel)

(1) Using the control panel (FR-PA02-02) for operation at 60Hz with digital frequency setting

Operation command: RUN key or FWD / REV key of the control panel (FR-PA02-02)
Frequency setting: ▲ / ▼ key
Related parameters: Pr. 79 "operation mode selection".
By repeating step 2 below during motor run, speed can be varied.

Step	Description	Image
1	Power on → Operation mode check Switch power on, refer to page 54, and set "1" in Pr. 79 "operation mode selection". The [PU] indication is lit.	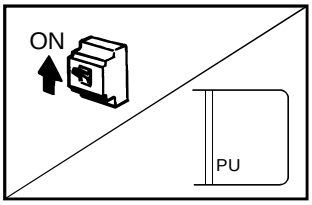
2	Running frequency setting Set the running frequency to 60Hz. 1) Refer to page 52 and select the frequency setting mode with the MODE key. 2) Refer to page 53, make setting with the ▲ / ▼ key, and write the setting with the SET key.	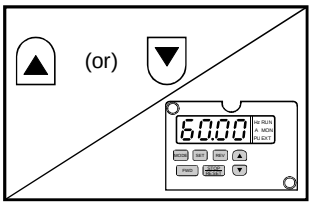
3	Start Press the RUN key (or FWD / REV key). The monitoring mode is automatically selected and the output frequency is displayed. The [RUN] indication is lit to indicate forward rotation, or flickers to indicate reverse rotation.	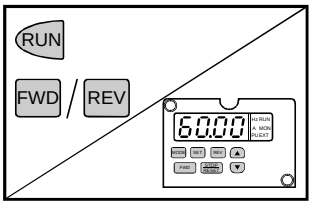
4	Stop Press the STOP RESET key. The motor is decelerated to a stop. The [RUN] indication goes off.	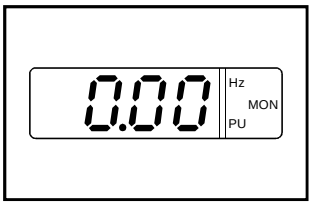

(2) PU jog operation

Hold down the RUN (or FWD or REV) key to perform operation, and release it to stop.
1) Set Pr. 15 "jog frequency" and Pr. 16 "jog acceleration/deceleration time".
2) Select the PU jog operation mode. (Refer to page 55.)
3) Hold down the RUN or FWD, REV key to perform operation.
(If the motor remains stopped, check Pr. 13 "starting frequency". The motor will not start if its setting is lower than the starting frequency.

3.3.4 Combined operation mode 1 (Operation using both external start signal and control panel)

When the start signal is provided externally (switch etc.) and the running frequency is set from the control panel (Pr. 79 = 3).
The external frequency setting signal and PU's forward rotation, reverse rotation and STOP RESET keys are not accepted. (Note)
Operation command: externally connected start signal
Frequency setting: ▲ / ▼ key of the control panel (FR-PA02-02) or multi-speed command (multi-speed command has priority) (Refer to page 75.)

Step	Description	Image
1	Power on Switch power on.	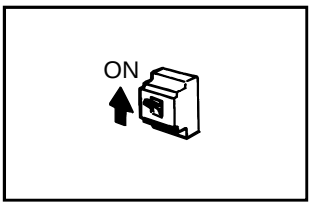
2	Operation mode selection Refer to page 54 and set "3" in Pr. 79 "operation mode selection". The [PU] and [EXT] indications are lit.	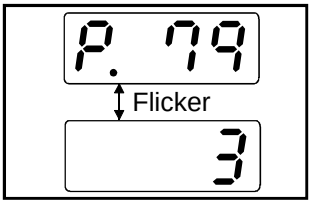
3	Start Turn on the start switch (STF or STR). Note: The motor does not start if both the forward and reverse rotation switches are turned on. If both switches are turned on during operation, the motor decelerates to a stop. The [RUN] indication is lit to indicate forward rotation, or flickers to indicate reverse rotation.	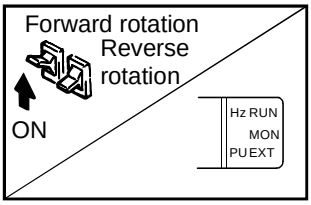
4	Running frequency setting Set the running frequency to 60.00Hz with the ▲ / ▼ key.	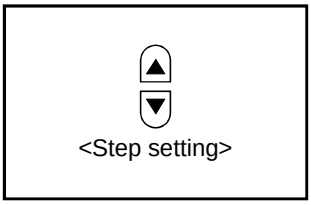
5	Stop Turn off the start switch (STF or STR). The motor stops. The [RUN] indication goes off.	

Note: The STOP RESET key is made valid if any of "14" to "17" is set in Pr. 75 "PU stop selection".

3.3.5 Combined operation mode 2

When the running frequency is set from a potentiometer connected across terminals 2-5 (frequency setting potentiometer) and the start signal is provided by the RUN key or FWD / REV key of the control panel (FR-PA02-02).

Operation command: RUN key (or FWD / REV key) of the control panel (FR-PA02-02) or multi-speed command (multi-speed command has priority) (Refer to page 75.)

Frequency setting: Externally connected frequency setting potentiometer or multi-speed command (multi-speed command has priority) Refer to page 75.

Step	Description	Image
1	Power on Switch power on.	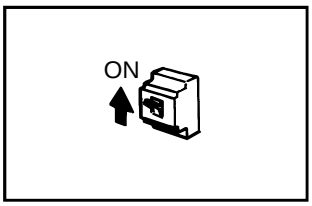
2	Operation mode selection Refer to page 54 and set "4" in Pr. 79 "operation mode selection". The [PU] and [EXT] indications are lit.	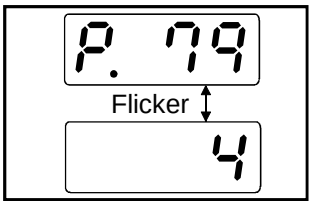
3	Start Press the RUN key (or FWD / REV key) of the control panel. The [RUN] indication is lit to indicate forward rotation, or flickers to indicate reverse rotation.	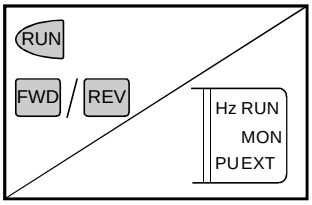
4	Acceleration → Constant speed Slowly turn the potentiometer connected across terminals 2-5 (frequency setting potentiometer) fully clockwise. The frequency shown on the display increases gradually to 60.00Hz.	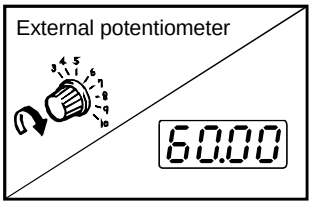
5	Deceleration Slowly turn the potentiometer connected across terminals 2-5 (frequency setting potentiometer) fully counterclockwise. The frequency shown on the display decreases gradually to 0.00Hz. The motor stops running.	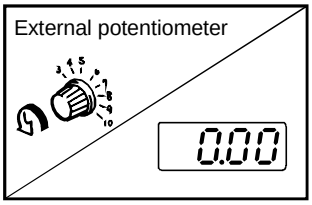
6	Stop Press the STOP RESET key. The operation command indication RUN goes off.	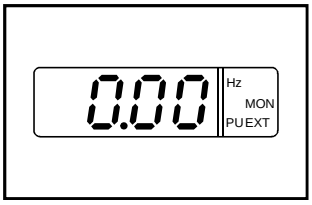

<Reference> If other frequency is required at fully clockwise position, change Pr. 38 "Frequency at 5V (10V)" setting. (Refer to page 160)

CHAPTER 4 PARAMETERS

This chapter explains the "parameters" of this product.
With the factory settings, the inverter is designed to perform simple variable-speed operation. Set necessary parameter values according to the load and operating specifications.
Always read the instructions before using the equipment.

4.1 Parameter List 63
4.2 Parameter Function Details 72

Note: By making parameter settings, you can change the functions of contact input terminals RL, RM, RH, MRS, open collector output terminals RUN, FU, and contact output terminals A, B, C. Therefore, signal names corresponding to the functions are used in the description of this chapter (except in the wiring examples). Note that they are not terminal names.

4.1 Parameter List

4.1.1 Parameter list

Function	Parameter Number	Name	Setting Range	Minimum Setting Increments	Factory Setting	Refer To:	Customer Setting
Basic functions	0	Torque boost (Note 1)	0 to 30%	0.1%	6%/4% (Note 11)	72	
	1	Maximum frequency	0 to 120Hz	0.01Hz (Note 3)	120Hz	73	
	2	Minimum frequency	0 to 120Hz	0.01Hz (Note 3)	0Hz	73	
	3	Base frequency (Note 1)	0 to 400Hz	0.01Hz (Note 3)	60Hz	74	
	4	Multi-speed setting (high speed)	0 to 400Hz	0.01Hz (Note 3)	60Hz	75	
	5	Multi-speed setting (middle speed)	0 to 400Hz	0.01Hz (Note 3)	30Hz	75	
	6	Multi-speed setting (low speed)	0 to 400Hz	0.01Hz (Note 3)	10Hz	75	
	7	Acceleration time	0 to 3600 s/ 0 to 360 s	0.1 s/0.01 s	5 s/10s (Note 4)	76	
	8	Deceleration time	0 to 3600 s/ 0 to 360 s	0.1 s/0.01 s	5 s/10s (Note 4)	76	
	9	Electronic thermal O/L relay	0 to 500A	0.01A	Rated output current (Note 5)	78	
Standard operation functions	10	DC injection brake operation frequency	0 to 120Hz	0.01Hz (Note 3)	3Hz	79	
	11	DC injection brake operation time	0 to 10 s	0.1 s	0.5 s	79	
	12	DC injection brake voltage	0 to 30%	0.1%	6%	79	
	13	Starting frequency	0 to 60Hz	0.01Hz	0.5Hz	80	
	14	Load pattern selection (Note 1)	0 to 3	1	0	81	
	15	Jog frequency	0 to 400Hz	0.01Hz (Note 3)	5Hz	82	
	16	Jog acceleration/ deceleration time	0 to 3600 s/ 0 to 360 s	0.1 s/0.01 s	0.5 s	82	
	18	High-speed maximum frequency	120 to 400Hz	0.1Hz (Note 3)	120Hz	73	
	19	Base frequency voltage (Note 1)	0 to 1000V, 8888,9999	0.1V	9999	74	
	20	Acceleration/deceleration reference frequency	1 to 400Hz	0.01Hz (Note 3)	60Hz	76	
	21	Acceleration/deceleration time increments	0, 1	1	0	76	
	22	Stall prevention operation level	0 to 200%	0.1%	150%	83	
	23	Stall prevention operation level compensation factor at double speed (Note 6)	0 to 200%, 9999	0.1%	9999	83	
	24	Multi-speed setting (speed 4)	0 to 400Hz, 9999	0.01Hz (Note 3)	9999	75	
	25	Multi-speed setting (speed 5)	0 to 400Hz, 9999	0.01Hz (Note 3)	9999	75	
	26	Multi-speed setting (speed 6)	0 to 400Hz, 9999	0.01Hz (Note 3)	9999	75	
	27	Multi-speed setting (speed 7)	0 to 400Hz, 9999	0.01Hz (Note 3)	9999	75	

Func-tion	Param-eter Number	Name	Setting Range	Minimum Setting Increments	Factory Setting	Refer To:	Custo-mer Setting
Standard operation functions	29	Acceleration/deceleration pattern	0, 1, 2	1	0	85	
	30	Regenerative function selection	0, 1	1	0	86	
	31	Frequency jump 1A	0 to 400Hz, 9999	0.01Hz (Note 3)	9999	87	
	32	Frequency jump 1B	0 to 400Hz, 9999	0.01Hz (Note 3)	9999	87	
	33	Frequency jump 2A	0 to 400Hz, 9999	0.01Hz (Note 3)	9999	87	
	34	Frequency jump 2B	0 to 400Hz, 9999	0.01Hz (Note 3)	9999	87	
	35	Frequency jump 3A	0 to 400Hz, 9999	0.01Hz (Note 3)	9999	87	
	36	Frequency jump 3B	0 to 400Hz, 9999	0.01Hz (Note 3)	9999	87	
	37	Speed display	0, 0.01 to 9998	0.001 r/min	0	88	
	38	Frequency at 5V (10V) input	1 to 400Hz	0.01Hz (Note 3)	60Hz (Note 2)	89	
	39	Frequency at 20mA input	1 to 400Hz	0.01Hz (Note 3)	60Hz (Note 2)	89	
Output terminal functions	41	Up-to-frequency sensitivity	0 to 100%	0.1%	10%	90	
	42	Output frequency detection	0 to 400Hz	0.01Hz (Note 3)	6Hz	90	
	43	Output frequency detection for reverse rotation	0 to 400Hz, 9999	0.01Hz (Note 3)	9999	90	
Second functions	44	Second acceleration/deceleration time	0 to 3600 s/ 0 to 360 s	0.1 s/0.01 s	5s/10s (Note 12)	76	
	45	Second deceleration time	0 to 3600 s/ 0 to 360 s, 9999	0.1 s/0.01 s	9999	76	
	46	Second torque boost (Note 1)	0 to 30%, 9999	0.1%	9999	72	
	47	Second V/F (base frequency) (Note 1)	0 to 400Hz, 9999	0.01Hz (Note 3)	9999	74	
	48	Second electronic overcurrent protection	0 to 500A, 9999	0.01A	9999	78	
Display functions	52	Control panel/PU main display data selection	0, 23, 100	1	0	92	
	54	FM terminal function selection (Note 9)	0, 1, 2	1	0	92	
	55	Frequency monitoring reference	0 to 400Hz	0.01Hz (Note 3)	60Hz	94	
	56	Current monitoring reference	0 to 500A	0.01A	Rated output current	94	
Automatic restart functions	57	Restart coasting time	0 to 5 s, 9999	0.1 s	9999	95	
	58	Restart cushion time	0 to 60 s	0.1 s	1.0 s	95	

Function	Parameter Number	Name	Setting Range	Minimum Setting Increments	Factory Setting	Refer To:	Customer Setting
Additional function	59	Remote setting function selection	0, 1, 2	1	0	97	
Operation selection functions	60	Shortest acceleration/ deceleration mode	0, 1, 2, 11, 12	1	0	99	
	61	Reference I for intelligent mode	0 to 500A, 9999	0.01A	9999	99	
	62	Ref. I for intelligent mode accel	0 to 200%, 9999	1%	9999	99	
	63	Ref. I for intelligent mode decel	0 to 200%, 9999	1%	9999	99	
	65	Retry selection	0, 1, 2, 3	1	0	101	
	66	Stall prevention operation level reduction starting frequency (Note 6)	0 to 400Hz	0.01Hz (Note 3)	60Hz	83	
	67	Number of retries at alarm occurrence	0 to 10, 101 to 110	1	0	101	
	68	Retry waiting time	0.1 to 360 s	0.1 s	1 s	101	
	69	Retry count display erasure	0	1	0	101	
	70	Special regenerative brake duty	0 to 30%	0.1%	0%	86	
	71	Applied motor (Note 6)	0, 1, 3, 5, 6, 13, 15, 16, 23, 100, 101, 103, 105, 106, 113, 115, 116, 123	1	0	103	
	72	PWM frequency selection	0 to 15	1	1	104	
	73	0-5V/0-10V selection	0, 1	1	0	105	
	74	Filter time constant	0 to 8	1	1	106	
	75	Reset selection/ disconnected PU detection/ PU stop selection	0 to 3,14 to 17	1	14	106	
	77	Parameter write disable selection	0, 1, 2	1	0	108	
	78	Reverse rotation prevention selection	0, 1, 2	1	0	109	
	79	Operation mode selection (Note 6)	0 to 4,6 to 8	1	0	110	
General-purpose Magneticflux vector control	80	Motor capacity (Note 6)	0.1 to 7.5kW, 9999 (Note 8)	0.01kW	9999	113	
	82	Motor exciting current	0 to 500A, 9999	0.01A	9999	115	
	83	Rated motor voltage (Note 6)	0 to 1000V	0.1V	200V/ 400V	115	
	84	Rated motor frequency (Note 6)	50 to 120Hz	0.01Hz (Note 3)	60Hz	115	
	90	Motor constant (R1)	0 to 50Ω, 9999	0.001Ω	9999	115	
	96	Auto-tuning setting/status (Note 6)	0, 1	1	0	115	

Function	Parameter Number	Name	Setting Range	Minimum Setting Increments	Factory Setting	Refer To:	Customer Setting
Communication functions	117	Station number	0 to 31	1	0	121	
	118	Communication speed	48, 96, 192	1	192	121	
	119	Stop bit length	0, 1 (data length 8) 10, 11 (data length 7)	1	1	121	
	120	Parity check presence/absence	0, 1, 2	1	2	121	
	121	Number of communication retries	0 to 10, 9999	1	1	121	
	122	Communication check time interval	0, 0.1 to 999.8 s, 9999	0.1 s	9999	121	
	123	Waiting time setting	0 to 150, 9999	1	9999	121	
	124	CR·LF presence/absence selection	0, 1, 2	1	1	121	
PID control	128	PID action selection	0, 20, 21	1	0	134	
	129	PID proportional band	0.1 to 1000%, 9999	0.1%	100%	134	
	130	PID integral time	0.1 to 3600 s, 9999	0.1 s	1 s	134	
	131	Upper limit	0 to 100%, 9999	0.1%	9999	134	
	132	Lower limit	0 to 100%, 9999	0.1%	9999	134	
	133	PID action set point for PU operation	0 to 100%	0.01%	0%	134	
	134	PID differential time	0.01 to 10.00 s, 9999	0.01 s	9999	134	
Additional function	145	Parameter for option (FR-PU04).					
	146	Parameter set by manufacturer. Do not set.					
Current detection	150	Output current detection level	0 to 200%	0.1%	150%	142	
	151	Output current detection period	0 to 10 s	0.1 s	0	142	
	152	Zero current detection level	0 to 200.0%	0.1%	5.0%	143	
	153	Zero current detection period	0.05 to 1 s	0.01 s	0.5 s	143	
Sub function	156	Stall prevention operation selection	0 to 31,100	1	0	144	
	158	AM terminal function selection (Note 10)	0, 1, 2	1	0	92	
Additional function	160	User group read selection	0, 1, 10, 11	1	0	146	
	168	Parameters set by manufacturer. Do not set.					
	169						
Initial monitor	171	Actual operation hour meter clear	0	——	0	148	

Function	Parameter Number	Name	Setting Range	Minimum Setting Increments	Factory Setting	Refer To:	Customer Setting
User functions	173	User group 1 registration	0 to 999	1	0	146	
	174	User group 1 deletion	0 to 999,9999	1	0	146	
	175	User group 2 registration	0 to 999	1	0	146	
	176	User group 2 deletion	0 to 999,9999	1	0	146	
Terminal assignment functions	180	RL terminal function selection (Note 6)	0 to 8, 16, 18	1	0	148	
	181	RM terminal function selection (Note 6)	0 to 8, 16, 18	1	1	148	
	182	RH terminal function selection (Note 6)	0 to 8, 16, 18	1	2	148	
	183	MRS terminal function selection (Note 6)	0 to 8, 16, 18	1	6	148	
	190	RUN terminal function selection (Note 6)	0 to 99	1	0	150	
	191	FU terminal function selection (Note 6)	0 to 99	1	4	150	
	192	A, B, C terminal function selection (Note 6)	0 to 99	1	99	150	
Multi-speed operation	232	Multi-speed setting (speed 8)	0 to 400Hz, 9999	0.01Hz (Note 3)	9999	75	
	233	Multi-speed setting (speed 9)	0 to 400Hz, 9999	0.01Hz (Note 3)	9999	75	
	234	Multi-speed setting (speed 10)	0 to 400Hz, 9999	0.01Hz (Note 3)	9999	75	
	235	Multi-speed setting (speed 11)	0 to 400Hz, 9999	0.01Hz (Note 3)	9999	75	
	236	Multi-speed setting (speed 12)	0 to 400Hz, 9999	0.01Hz (Note 3)	9999	75	
	237	Multi-speed setting (speed 13)	0 to 400Hz, 9999	0.01Hz (Note 3)	9999	75	
	238	Multi-speed setting (speed 14)	0 to 400Hz, 9999	0.01Hz (Note 3)	9999	75	
	239	Multi-speed setting (speed 15)	0 to 400Hz, 9999	0.01Hz (Note 3)	9999	75	
Sub functions	240	Soft-PWM setting	0, 1	1	1	104	
	244	Cooling fan operation selection	0, 1	1	0	151	
	245	Rated motor slip	0 to 50%, 9999	0.01%	9999	152	
	246	Slip compensation response time	0.01 to 10 s	0.01 s	0.5 s	152	
	247	Constant-output region slip compensation selection	0, 9999	1	9999	152	
	249	Ground fault detection at start (Note 9)	0, 1	1	0	153	
Stop selection function	250	Stop selection	0 to 100 s, 1000 to 1100 s, 8888, 9999	1	9999	154	
Additional function	251	Output phase failure protection selection	0, 1	1	1	155	
	342	E^2PROM write selection (Note 10)	0, 1	1	0	121	

Function	Parameter Number	Name	Setting Range		Minimum Setting Increments	Factory Setting		Refer To:	Customer Setting
Calibration functions	900	FM terminal calibration (Note 9)	——		——	——		156	
	901	AM terminal calibration (Note 10)	——		——	——		158	
	902	Frequency setting voltage bias	0 to 10V	0 to 60Hz	0.01Hz	0V	0Hz	160	
	903	Frequency setting voltage gain	0 to 10V	1 to 400Hz	0.01Hz	5V	60Hz	160	
	904	Frequency setting current bias	0 to 20mA	0 to 60Hz	0.01Hz	4 mA	0Hz	160	
	905	Frequency setting current gain	0 to 20mA	1 to 400Hz	0.01Hz	20 mA	60Hz	160	
	990	Parameter for option (FR-PU04).							
	991								

Note: 1. Indicates the parameter of which setting is ignored when the general-purpose magnetic flux vector control mode is selected.
2. Since calibration is made before shipment from the factory, the settings differ slightly between inverters. The inverter is preset to provide a frequency slightly higher than 60Hz.
3. When the control panel is used and the setting is 100Hz or more, the setting increments are 0.1Hz.
The setting increments are 0.01Hz when the communication made.
4. The setting depends on the inverter capacity: (0.1K to 3.7K)/(5.5K to 7.5K).
5. Set to 85% of the rated inverter current for the 0.1K to 0.75K.
6. If "2" is set in Pr. 77 (parameter write inhibit selection), the setting cannot be changed during operation.
7. The half-tone screened parameters allow their settings to be changed during operation if "0" (factory setting) has been set in Pr. 77 (parameter write inhibit selection). (However, the Pr. 72 and Pr. 240 values may be changed during PU operation only.)
8. The setting range changes with the inverter: 0.2kW to 7.5kW, 9999 for the 400V class.
9. Pr. 249 and Pr. 900 are not available for the 400V class.
10. Setting may be made on the 400V class inverter only.
11. The setting depends on the inverter capacity: 4% for the FR-E540-5.5K and 7.5K-NA.
12. For the FR-E540-5.5K and 7.5K-NA, the factory setting is 10s.

4.1.2 List of parameters classified by purpose of use

Set the parameters according to the operating conditions. The following list indicates purpose of use and corresponding parameters.

Purpose of Use		Parameter Numbers Parameter numbers which must be set
Related to operation	Operation mode selection	Pr. 79
	Acceleration/deceleration time/pattern adjustment	Pr. 7, Pr. 8, Pr. 20, Pr. 21, Pr. 29
	Selection of output characteristics optimum for load characteristics	Pr. 3, Pr. 14, Pr. 19
	Output frequency restriction (limit)	Pr. 1, Pr. 2, Pr. 18
	Operation over 60Hz	Pr. 1, Pr. 18, Pr. 38, Pr. 39, Pr. 903, Pr. 905
	Adjustment of frequency setting signals and outputs	Pr. 38,Pr. 39, Pr. 73, Pr. 902 to Pr. 905
	Motor output torque adjustment	Pr. 0, Pr. 80
	Brake operation adjustment	Pr. 10, Pr. 11, Pr. 12
	Multi-speed operation	Pr. 1, Pr. 2, Pr. 4, Pr. 5, Pr. 6, Pr. 15, Pr. 24, Pr. 25, Pr. 26, Pr. 27, Pr. 232, Pr. 233, Pr. 234, Pr. 235, Pr. 236, Pr. 237, Pr. 238, Pr. 239
	Jog operation	Pr. 15, Pr. 16
	Frequency jump operation	Pr. 31, Pr. 32, Pr. 33, Pr. 34, Pr. 35, Pr. 36
	Automatic restart operation after instantaneous power failure	Pr. 57, Pr. 58
	Optimum acceleration/deceleration within continuous rated range	Pr. 60
	Slip compensation setting	Pr. 245 to Pr. 247
	Output stop method selection	Pr. 250
Related to application operation	General-purpose magnetic flux vector control operation	Pr. 80
	Electromagnetic brake operation timing	Pr. 42, Pr. 190 to Pr. 192
	Offline auto tuning setting	Pr. 82 to Pr. 84, Pr. 90, Pr. 96
	Sub-motor operation	Pr. 0, Pr. 3, Pr. 7, Pr. 8, Pr. 9, Pr. 44, Pr. 45, Pr. 46, Pr. 47, Pr. 48
	Regenerative function selection	Pr. 30, Pr. 70
	Operation in communication with personal computer	Pr. 117 to Pr. 124, Pr. 342
	Operation under PID control	Pr. 73, Pr. 79, Pr. 128 to Pr. 134, Pr. 180 to Pr. 183, Pr. 190 to Pr. 192
	Noise reduction	Pr. 72, Pr. 240

Purpose of Use		Parameter Numbers Parameter numbers which must be set
Related to monitoring	Frequency meter calibration	Pr. 54, Pr. 55, Pr. 56, Pr. 158, Pr. 900, Pr. 901
	Monitor display on control panel (FR-PA02-02) or parameter unit (FR-PU04)	Pr. 54, Pr. 55, Pr. 56, Pr. 158, Pr. 900, Pr. 901
	Display of speed, etc.	Pr. 37, Pr. 52
	Clearing of inverter's actual operation time	Pr. 171
Related to incorrect operation prevention	Function write prevention	Pr. 77
	Reverse rotation prevention	Pr. 78
	Parameter grouping	Pr. 160, Pr. 173 to Pr. 176
	Current detection	Pr. 150 to Pr. 153, Pr. 190 to Pr. 192
	Motor stall prevention	Pr. 22, Pr. 23, Pr. 66, Pr. 156
Others	Input terminal function assignment	Pr. 180 to Pr. 183
	Output terminal function assignment	Pr. 190 to Pr. 192
	Increased cooling fan life	Pr. 244
	Motor protection from overheat	Pr. 9, Pr. 71
	Automatic restart operation at alarm stop	Pr. 65, Pr. 67, Pr. 68, Pr. 69
	Ground fault overcurrent setting	Pr. 249
	Inverter reset selection	Pr. 75

4.1.3 Parameters recommended to be set by the user

We recommend the following parameters to be set by the user.
Set them according to the operation specifications, load, etc.

Parameter Number	Name	Application
1	Maximum frequency	Used to set the maximum and minimum output frequencies.
2	Minimum frequency	
7	Acceleration time	Used to set the acceleration and deceleration times.
8	Deceleration time	
9	Electronic thermal O/L relay	Used to set the current of the electronic overcurrent protection to protect the motor from overheat.
14	Load pattern selection	Used to select the optimum output characteristics which match the application and load characteristics.
71	Applied motor	Used to set the thermal characteristics of the electronic overcurrent protection according to the motor used.
73	0-5V/0-10V selection	Used to select the specifications of the frequency setting signal entered across terminal 2-5 to perform operation with the voltage input signal.
900	FM terminal calibration	Used to calibrate the meter connected across terminals FM-SD.
901	AM terminal calibration	Used to calibrate the meter connected across terminals AM-5.
902	Frequency setting voltage bias	Used to set the magnitude (slope) of the output frequency relative to the frequency setting signal (0 to 5V, 0 to 10V or 4 to 20mA DC) as desired.
903	Frequency setting voltage gain	
904	Frequency setting current bias	
905	Frequency setting current gain	

4.2.1 Torque boost (Pr. 0, Pr. 46)

Related parameters

Pr. 3 "base frequency"
Pr. 19 "base frequency voltage"
Pr. 71 "applied motor"
Pr. 80 "motor capacity"
Pr. 180 to Pr. 183 (input terminal function selection)

Pr. 0 "torque boost"

Pr. 46 "second torque boost"

Increase the setting when the inverter-to-motor distance is long or motor torque in the low-speed range is insufficient, for example;

- Motor torque in the low-frequency range can be adjusted to the load to increase the starting motor torque.
- You can select either of the two starting torque boosts by RT terminal switching.

Parameter Number	Factory Setting	Setting Range	Remarks
0	6%/4% (Note)	0 to 30%	(Note) FR-E520-0.1K to 7.5K-NA: 6% FR-E540-0.4K to 3.7K-NA: 6% FR-E510W-0.1K to 0.75K-NA: 6% FR-E540-5.5K, 7.5K-NA: 4%
46	9999	0 to 30%, 9999	9999: Function invalid

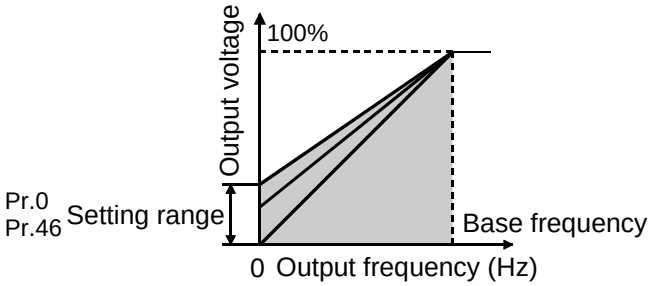

<Setting>

- Assuming that the base frequency voltage is 100%, set the 0Hz voltage in %.
- Pr. 46 "Second torque boost" is valid when the RT signal is on. (Note 3)
- When using the inverter-dedicated motor (constant-torque motor), change the setting as indicated below:
  FR-E520-0.1K to 0.75K-NA, FR-E540-0.4K, 0.75K-NA,
  FR-E510W-0.1K to 0.75K-NA.....6%
  FR-E520-1.5K to 7.5K-NA, FR-E540-1.5K to 3.7K-NA.....4%
  FR-E540-5.5K, 7.5K-NA 3%
  If you leave the factory setting as it is and change the Pr. 71 value to the setting for use of the constant-torque motor, the Pr.0 setting changes to the above value.

Note: 1. This parameter setting is ignored when the general-purpose magnetic flux vector control mode has been selected.
2. A large setting may result in an overheated motor or overcurrent trip. The guideline for the largest value for this parameter is about 10%.
3. The RT signal serves as the second function selection signal and makes the other second functions valid. Refer to page 148 for Pr. 180 to Pr. 183 (input terminal function selection).

4.2.2 Output frequency range (Pr. 1, Pr. 2, Pr. 18)

Related parameters

Pr. 13 "starting frequency"
Pr. 38 "frequency at 5V (10V) input"
Pr. 39 "frequency at 20mA input"
Pr. 79 "operation mode selection"

Pr. 1 "maximum frequency"

Pr. 2 "minimum frequency"

Pr. 18 "high-speed maximum frequency"

Used to clamp the upper and lower limits of the output frequency. Used for high-speed operation at or over 120Hz.

- Can be used to set the upper and lower limits of motor speed.

Parameter Number	Factory Setting	Setting Range
1	120Hz	0 to 120Hz
2	0Hz	0 to 120Hz
18	120Hz	120 to 400Hz

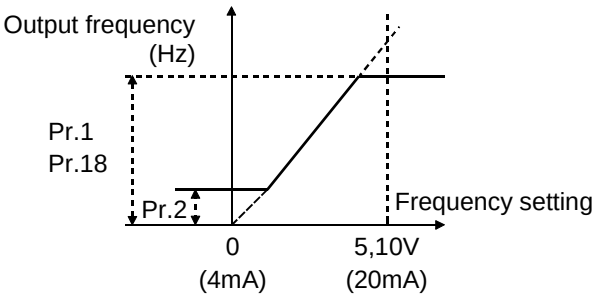

<Setting>

- Use Pr. 1 to set the upper limit of the output frequency. If the frequency of the frequency command entered is higher than the setting, the output frequency is clamped at the maximum frequency.
- To perform operation over 120Hz, set the upper limit of the output frequency in Pr. 18. (When the Pr. 18 value is set, Pr. 1 automatically changes to the frequency in Pr. 18. Also, when the Pr. 1 value is set, Pr. 18 automatically changes to the frequency in Pr. 1.)
- Use Pr. 2 to set the lower limit of the output frequency.

Note: When the potentiometer (frequency setting potentiometer) connected across terminals 2-5 is used for operation beyond 60Hz, change the value of Pr. 38 (or Pr. 39 for use of the potentiometer connected across terminals 4-5). Operation over 60Hz cannot be performed by merely changing the settings of Pr. 1 and Pr. 18.

⚠ CAUTION

⚠ **When the Pr. 2 setting is higher than the Pr. 13 "starting frequency" value, note that the motor will run at the set frequency by merely switching the start signal on, without entering the command frequency.**

4.2.3 Base frequency, base frequency voltage (Pr. 3, Pr. 19, Pr. 47)

Related parameters

Pr. 14 "load pattern selection"
Pr. 71 "applied motor"
Pr. 80 "motor capacity"
Pr. 83 "rated motor voltage"
Pr. 180 to Pr. 183 (input terminal function selection)

Pr. 3 "base frequency"

Pr. 19 "base frequency voltage"

Pr. 47 "second V/F (base frequency)"

Used to adjust the inverter outputs (voltage, frequency) to the motor rating.

- When running a standard motor, generally set the rated motor frequency. When running the motor using the commercial power supply-inverter switch-over, set the base frequency to the same value as the power supply frequency.
- If the frequency given on the motor rating plate is "50Hz" only, always set to "50Hz". Leaving it as "60Hz" may make the voltage too low and the torque less, resulting in overload tripping. Care must be taken especially when Pr. 14 "load pattern selection" = 1.

Parameter Number	Factory Setting	Setting Range	Remarks
3	60Hz	0 to 400Hz	
19	9999	0 to 1000V, 8888, 9999	8888: 95% of power supply voltage*1 9999: Same as power supply voltage*2
47	9999	0 to 400Hz, 9999	9999: Function invalid

*1: The base frequency voltage of the FR-E510W-0.1K to 0.75K-NA is 1.9 times larger than the power supply voltage.
*2: The base frequency voltage of the FR-E510W-0.1K to 7.5K-NA is twice larger than the power supply voltage.

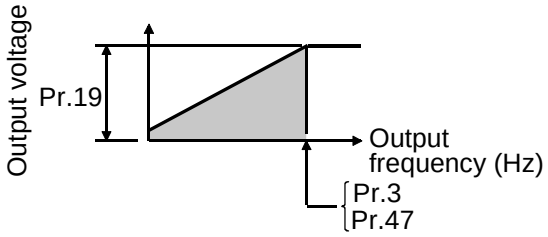

<Setting>

- Use Pr. 3 and Pr. 47 to set the base frequency (rated motor frequency). Two base frequencies can be set and the required frequency can be selected from them.
- Pr. 47 "Second V/F (base frequency) " is valid when the RT signal is on. (Note 3)
- Use Pr. 19 to set the base voltage (e.g. rated motor voltage).

Note: 1. Set 60Hz in Pr. 3 "base frequency" when using a Mitsubishi constant-torque motor.
2. When the general-purpose magnetic flux vector control mode has been selected, Pr. 3, Pr. 19 and Pr. 47 are made invalid and Pr. 83 and Pr. 84 are made valid.
3. The RT signal serves as the second function selection signal and makes the other second functions valid. Refer to page 148 for Pr. 180 to Pr. 183 (input terminal function selection).

4.2.4 Multi-speed operation (Pr. 4, Pr. 5, Pr. 6, Pr. 24 to Pr. 27, Pr. 232 to Pr. 239)

Related parameters

Pr. 1 "maximum frequency"
Pr. 2 "minimum frequency"
Pr. 29 "acceleration/deceleration pattern"
Pr. 79 "operation mode selection"
Pr. 180 to Pr. 183 (input terminal function selection)

Pr. 4 "multi-speed setting (high speed)"

Pr. 5 "multi-speed setting (middle speed)"

Pr. 6 "multi-speed setting (low speed)"

Pr. 24 to Pr. 27 "multi-speed setting (speeds 4 to 7)"

Pr. 232 to Pr. 239 "multi-speed setting (speeds 8 to 15)"

Used to switch between the predetermined running speeds.

- Any speed can be selected by merely switching on/off the corresponding contact signals (RH, RM, RL, REX signals).
- By using these functions with Pr. 1 "maximum frequency" and Pr. 2 "minimum frequency", up to 17 speeds can be set.
- Valid in the external operation mode or combined mode (Pr. 79 = 4).

Parameter Number	Factory Setting	Setting Range	Remarks
4	60Hz	0 to 400Hz	
5	30Hz	0 to 400Hz	
6	10Hz	0 to 400Hz	
24 to 27	9999	0 to 400Hz, 9999	9999: Not selected
232 to 239	9999	0 to 400Hz, 9999	9999: Not selected

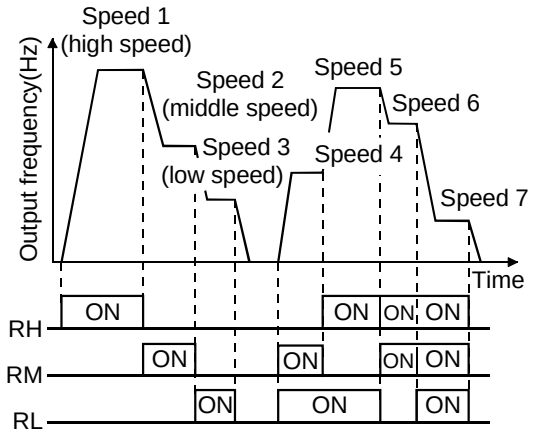

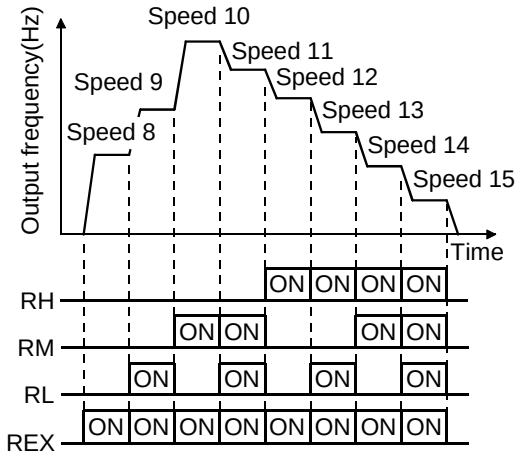

<Setting>

- Set the running frequencies in the corresponding parameters.
- Each speed (frequency) can be set as desired between 0 and 400Hz during inverter operation. After the required multi-speed setting parameter has been read, the setting can be changed by pressing the ▲ / ▼ key. In this case, when you release the ▲ / ▼ key, press the SET key (WRITE key when using the parameter unit (FR-PU04)) to store the set frequency.
- Use any of Pr. 180 to Pr. 183 to assign the terminal used to input the REX signal.

Note: 1. The multi-speed settings override the main speeds (across terminals 2-5, 4-5).
2. The multi-speeds can also be set in the PU or external operation mode.
3. For 3-speed setting, if two or three speeds are simultaneously selected, priority is given to the frequency setting of the lower signal.
4. Pr. 24 to Pr. 27 and Pr. 232 to Pr. 239 settings have no priority between them.
5. The parameter values can be changed during operation.
6. When terminal assignment is changed using Pr. 180 to Pr. 183, the other functions may be affected. Check the functions of the corresponding terminals before making setting.

4.2.5 Acceleration/deceleration time (Pr. 7, Pr. 8, Pr. 20, Pr. 21, Pr. 44, Pr. 45)

Related parameters

Pr. 3 "base frequency"
Pr. 29 "acceleration/deceleration pattern"

Pr. 7 "acceleration time"

Pr. 8 "deceleration time"

Pr. 20 "acceleration/deceleration reference frequency"

Pr. 21 "acceleration/deceleration time increments"

Pr. 44 "second acceleration/deceleration time"

Pr. 45 "second deceleration time"

Used to set motor acceleration/deceleration time.
Set a larger value for a slower speed increase/decrease or a smaller value for a faster speed increase/decrease.

Parameter Number	Factory Setting		Setting Range	Remarks
7	0.1K to 3.7K	5s	0 to 3600s/0 to 360s	
	5.5K, 7.5K	10s		
8	0.1K to 3.7K	5s	0 to 3600s/0 to 360s	
	5.5K, 7.5K	10s		
20	60Hz		1 to 400Hz	
21	0		0, 1	0: 0 to 3600s 1: 0 to 360s
44	5s (Note)		0 to 3600s/0 to 360s	
45	9999		0 to 3600s/ 0 to 360s, 9999	9999: acceleration time = deceleration time

Note: The FR-E540-5.5K-NA and 7.5K-NA are factory-set to 10s.

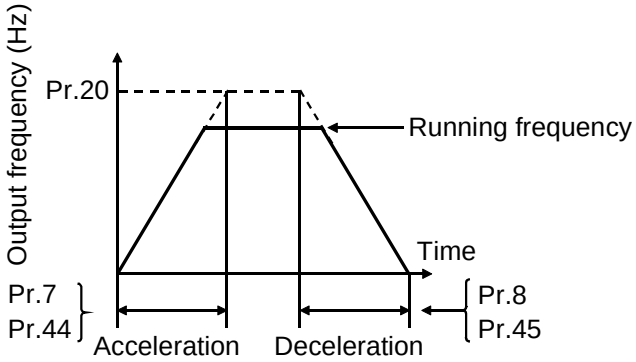

<Setting>

- Use Pr. 21 to set the acceleration/deceleration time and minimum setting increments:
  Set value "0" (factory setting).... 0 to 3600s (minimum setting increments: 0.1s)
  Set value "1"..... 0 to 360s (minimum setting increments: 0.01s)
- Use Pr. 7 and Pr. 44 to set the acceleration time required to reach the frequency set in Pr. 20 from 0Hz.
- Use Pr. 8 and Pr. 45 to set the deceleration time required to reach 0Hz from the frequency set in Pr. 20.
- Pr. 44 and Pr. 45 are valid when the RT signal is on.
- Set "9999" in Pr. 45 to make the deceleration time equal to the acceleration time (Pr. 44).

Note: 1. In S-shaped acceleration/deceleration pattern A (refer to page 85), the set time is the period required to reach the base frequency set in Pr. 3.

- Acceleration/deceleration time calculation expression when the set frequency is the base frequency or higher

$$t = \frac{4}{9} \times \frac{T}{(\text{Pr. } 3)^2} \times f^2 + \frac{5}{9} T$$

T: Acceleration/deceleration time setting (s)
f : Set frequency (Hz)

- Guideline for acceleration/deceleration time at the base frequency of 60Hz (0Hz to set frequency)

Frequency setting (Hz) / Acceleration/ deceleration time (s)	60	120	200	400
5	5	12	27	102
15	15	35	82	305

2. If the Pr. 20 setting is changed, the settings of calibration functions Pr. 903 and Pr. 905 (frequency setting signal gains) remain unchanged.
   To adjust the gains, adjust calibration functions Pr. 903 and Pr. 905.
3. When the setting of Pr. 7, Pr. 8, Pr. 44 or Pr. 45 is "0", the acceleration/ deceleration time is 0.04 seconds. At this time, set 120Hz or less in Pr. 20.
4. When the RT signal is on, the other second functions such as second torque boost are also selected.
5. If the shortest acceleration/deceleration time is set, the actual motor acceleration/deceleration time cannot be made shorter than the shortest acceleration/deceleration time determined by the mechanical system's J (inertia moment) and motor torque.

4.2.6 Electronic overcurrent protection (Pr. 9, Pr. 48)

Related parameter

Pr. 71 "applied motor"
Pr. 180 to Pr. 183
(input terminal function selection)

Pr. 9 "electronic thermal O/L relay"

Pr. 48 "second electronic overcurrent protection"

Set the current of the electronic overcurrent protection to protect the motor from overheat. This feature provides the optimum protective characteristics, including reduced motor cooling capability, at low speed.

Parameter Number	Factory Setting	Setting Range	Remarks
9	Rated output current*	0 to 500A	
48	9999	0 to 500A, 9999	9999: Function invalid

*0.1K to 0.75K are set to 85% of the rated inverter current.

<Setting>

- Set the rated current [A] of the motor.
  (Normally set the rated current value at 50Hz if the motor has both 50Hz and 60Hz rated current.)
- Setting "0" makes the electronic overcurrent protection (motor protective function) invalid. (The inverter's protective function is valid.)
- When using Mitsubishi constant-torque motor, first set "1" in Pr. 71 to choose the 100% continuous torque characteristic in the low-speed range. Then, set the rated motor current in Pr. 9.
- Pr. 48 "Second electronic overcurrent protection" is made valid when the RT signal is on. (Note 4)

Note: 1. When two or more motors are connected to the inverter, they cannot be protected by the electronic overcurrent protection. Install an external thermal relay to each motor.
2. When the difference between the inverter and motor capacities is large and the setting is small, the protective characteristics of the electronic overcurrent protection will be deteriorated. In this case, use an external thermal relay.
3. A special motor cannot be protected by the electronic overcurrent protection. Use an external thermal relay.
4. The RT signal serves as the second function selection signal and makes the other second functions valid. Refer to page 148 for Pr. 180 to Pr. 183 (input terminal function selection).

4.2.7 DC injection brake (Pr. 10 to Pr. 12)

Pr. 10 "DC injection brake operation frequency"

Pr. 11 "DC injection brake operation time"

Pr. 12 "DC injection brake voltage"

By setting the DC injection brake voltage (torque),
operation time and operation starting frequency, the stopping accuracy of positioning operation, etc. or the timing of operating the DC injection brake to stop the motor can be adjusted according to the load.

Parameter Number	Factory Setting	Setting Range
10	3Hz	0 to 120Hz
11	0.5 s	0 to 10 s
12	6%	0 to 30%

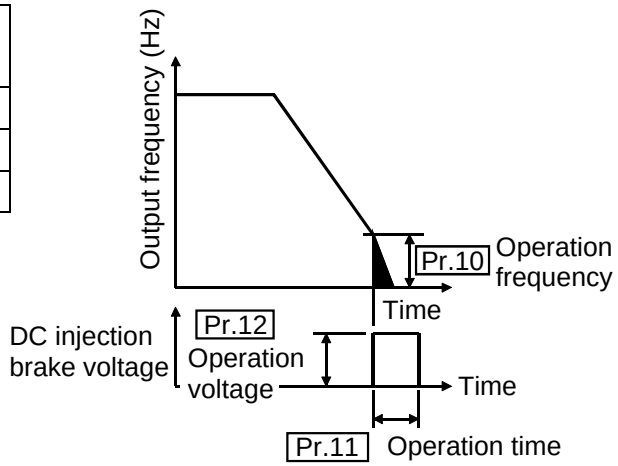

<Setting>

- Use Pr. 10 to set the frequency at which the DC injection brake operation is started.
- Use Pr. 11 to set the period during when the brake is operated.
- Use Pr. 12 to set the percentage of the power supply voltage.
- Change the Pr. 12 setting when using the inverter-dedicated motor (constant-torque motor).
  FR-E520-0.1K to 7.5K-NA, FR-E510W-0.1K to 0.75K-NA..... 4% (Note)
  FR-E540-0.4K to 7.5K-NA..... 6%

Note: When the Pr. 12 value is as factory-set, changing the Pr. 71 value to the setting for use of a constant-torque motor changes the Pr. 12 value to 4% automatically.

⚠ CAUTION

⚠ **Install a mechanical brake. No holding torque is provided.**

4.2.8 Starting frequency (Pr. 13)

Related parameters

Pr. 2 "minimum frequency"

Pr. 13 "starting frequency"

You can set the starting frequency between 0 and 60Hz.

- Set the starting frequency at which the start signal is switched on.

Parameter Number	Factory Setting	Setting Range
13	0.5Hz	0 to 60Hz

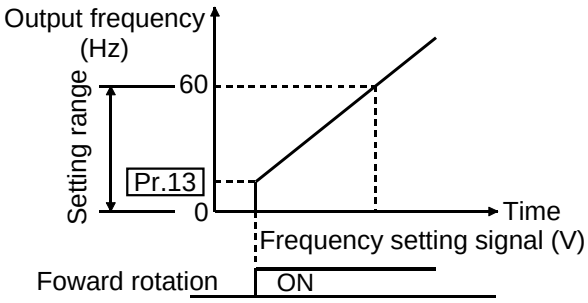

Note: The inverter will not start if the frequency setting signal is less than the value set in Pr. 13 "starting frequency".
For example, when 5Hz is set in Pr. 13, the motor will not start running until the frequency setting signal reaches 5Hz.

⚠ CAUTION

⚠ **When the Pr. 13 setting is lower than the Pr. 2 value, note that the motor will run at the set frequency by merely switching the start signal on, without entering the command frequency.**

4.2.9 Load pattern selection (Pr. 14)

Pr. 14 "load pattern selection"

Related parameter

Pr. 0 "torque boost"
Pr. 46 "second torque boost"
Pr. 80 "motor capacity"
Pr. 180 to Pr. 183
(input terminal function selection)

You can select the optimum output characteristic (V/F characteristic) for the application and load characteristics.

Parameter Number	Factory Setting	Setting Range
14	0	0 to 3

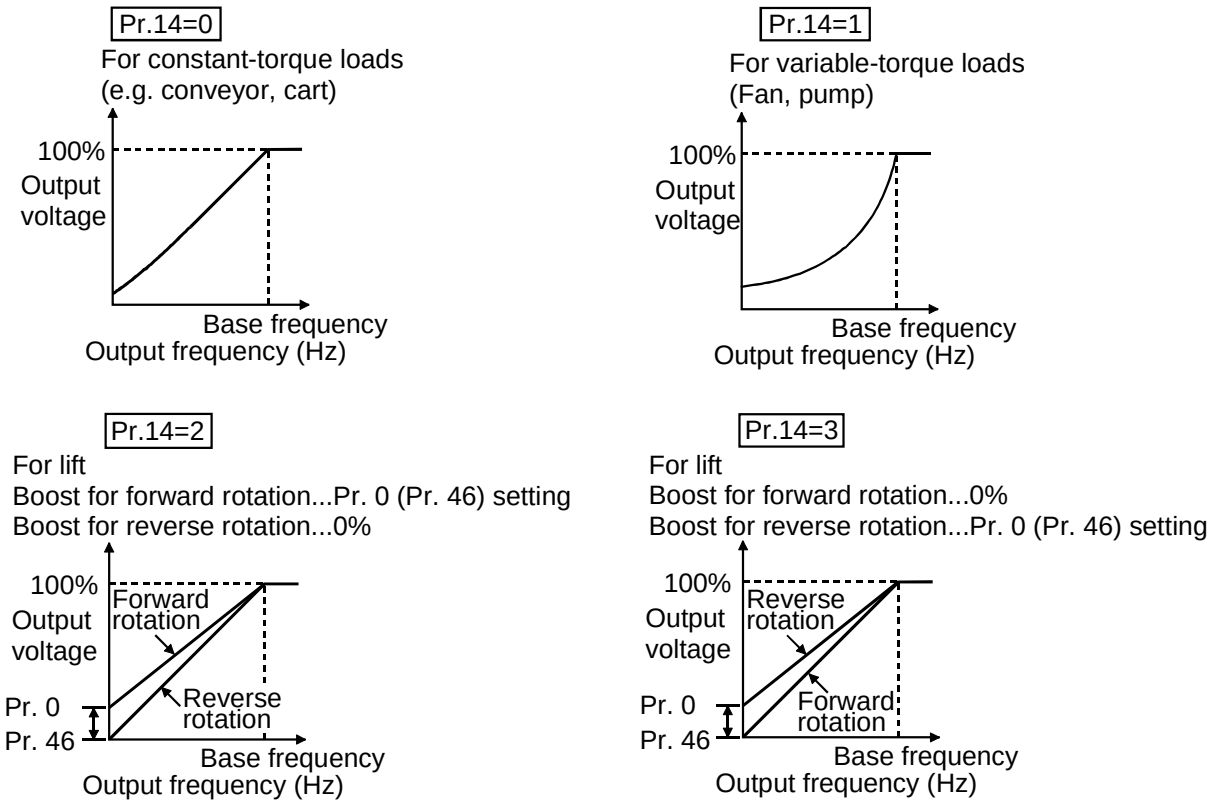

Note: 1. This parameter setting is ignored when the general-purpose magnetic flux vector control mode has been selected.
2. Pr. 46 "second torque boost" is made valid when the RT signal turns on.
The RT signal acts as the second function selection signal and makes the other second functions valid.
Refer to page 148 for Pr. 180 to Pr. 183 (input terminal function selection).

4.2.10 Jog operation (Pr. 15, Pr. 16)

Related parameters

Pr. 20 "acceleration/deceleration reference frequency"
Pr. 21 "acceleration/deceleration time increments"

Pr. 15 "jog frequency"

Pr. 16 "jog acceleration/deceleration time"

Jog operation can be started and stopped by selecting the jog mode from the control panel and pressing and releasing the RUN key (FWD, REV key).

- Set the frequency and acceleration/deceleration time for jog operation.

Parameter Number	Factory Setting	Setting Range	Remarks
15	5Hz	0 to 400Hz	
16	0.5 s	0 to 3600 s	When Pr. 21 = 0
		0 to 360 s	When Pr. 21 = 1

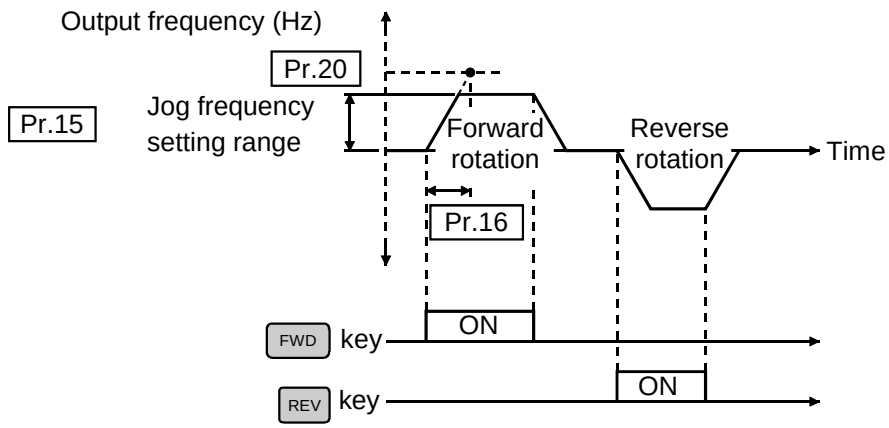

Note: 1. In S-shaped acceleration/deceleration pattern A, the acceleration/deceleration time is the period of time required to reach Pr. 3 "base frequency", not Pr. 20.
2. The acceleration time and deceleration time cannot be set separately for jog operation.
3. The value set in Pr. 15 "jog frequency" should be equal to or greater than the Pr. 13 "starting frequency" setting.

Pr. 18 ➔ Refer to Pr. 1, Pr. 2.

Pr. 19 ➔ Refer to Pr. 3.

Pr. 20, Pr. 21 ➔ Refer to Pr. 7, Pr. 8.

4.2.11 Stall prevention (Pr. 22, Pr. 23, Pr. 66)

Related parameters

Pr. 9 "electronic thermal O/L relay"
Pr. 48 "second electronic overcurrent protection"
Pr. 73 "0-5V/0-10V selection"

Pr. 22 "stall prevention operation level"

Pr. 23 "stall prevention operation level compensation factor at double speed"

Pr. 66 "stall prevention operation level reduction starting frequency"

- Set the output current level at which the output frequency will be adjusted to prevent the inverter from stopping due to overcurrent etc.
- For high-speed operation at or over the motor base frequency, acceleration may not be made because the motor current does not increase.
  To improve the operation characteristics of the motor in such a case, the stall prevention level in the high-frequency range can be reduced. This is effective for operation of a centrifugal separator up to the high-speed range. Normally, set 60Hz in Pr. 66 and 100% in Pr. 23.
- For operation in the high-frequency range, the current in the locked motor state is smaller than the rated output current of the inverter and the inverter does not result in an alarm (protective function is not activated) if the motor is at a stop. To improve this and activate the alarm, the stall prevention level can be reduced.

Parameter Number	Factory Setting	Setting Range	Remarks
22	150%	0 to 200%	
23	9999	0 to 200%, 9999	9999: Constant according to Pr. 22
66	60Hz	0 to 400Hz	

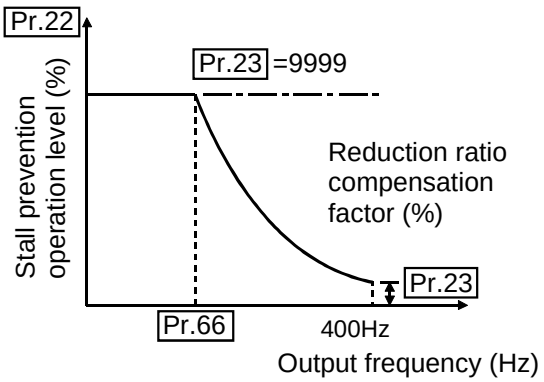

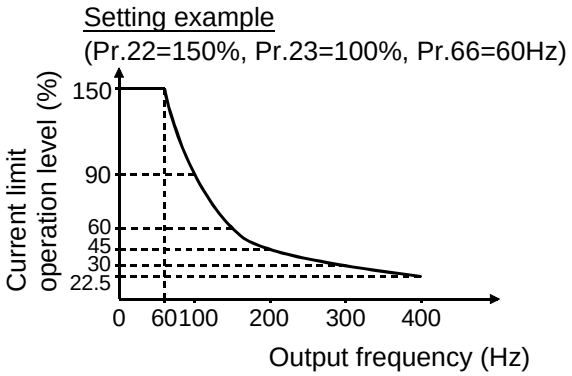

<Setting>

- In Pr. 22, set the stall prevention operation level. Normally set it to 150% (factory setting). Set "0" in Pr. 22 to disable the stall prevention operation.
- To reduce the stall prevention operation level in the high-frequency range, set the reduction starting frequency in Pr. 66 and the reduction ratio compensation factor in Pr. 23.

  Calculation expression for stall prevention operation level

$$\text{Stall prevention operation level (\%)} = A + B \times \left[\frac{\text{Pr. 22} - A}{\text{Pr. 22} - B}\right] \times \left[\frac{\text{Pr. 23} - 100}{100}\right]$$

$$\text{where, } A = \frac{\text{Pr. 66 (Hz)} \times \text{Pr. 22 (\%)}}{\text{output frequency (Hz)}},\ B = \frac{\text{Pr. 66 (Hz)} \times \text{Pr. 22 (\%)}}{400\text{Hz}}$$

- By setting "9999" (factory setting) in Pr. 23, the stall prevention operation level is constant at the Pr. 22 setting up to 400Hz.

Note:	When the fast-response current limit has been set in Pr. 156 (factory setting has the current limit activated), do not set the Pr. 22 value to 170% or more. Torque will not be developed by doing so.

⚠ CAUTION

⚠ **Do not set a small value as the stall prevention operation current. Otherwise, torque generated will reduce.**

⚠ **Test operation must be performed.**
Stall prevention operation during acceleration may increase the acceleration time.
Stall prevention operation during constant speed may change the speed suddenly.
Stall prevention operation during deceleration may increase the deceleration time, increasing the deceleration distance.

Pr. 24 to Pr. 27 ➔ Refer to Pr. 4 to Pr. 6.

4.2.12 Acceleration/deceleration pattern (Pr. 29)

Pr. 29 "acceleration/deceleration pattern"

Related parameters

Pr. 3 "base frequency"
Pr. 7 "acceleration time"
Pr. 8 "deceleration time"
Pr. 20 "acceleration/deceleration reference frequency"
Pr. 44 "second acceleration/deceleration time"
Pr. 45 "second deceleration time"

Set the acceleration/deceleration pattern.

Parameter Number	Factory Setting	Setting Range
29	0	0, 1, 2

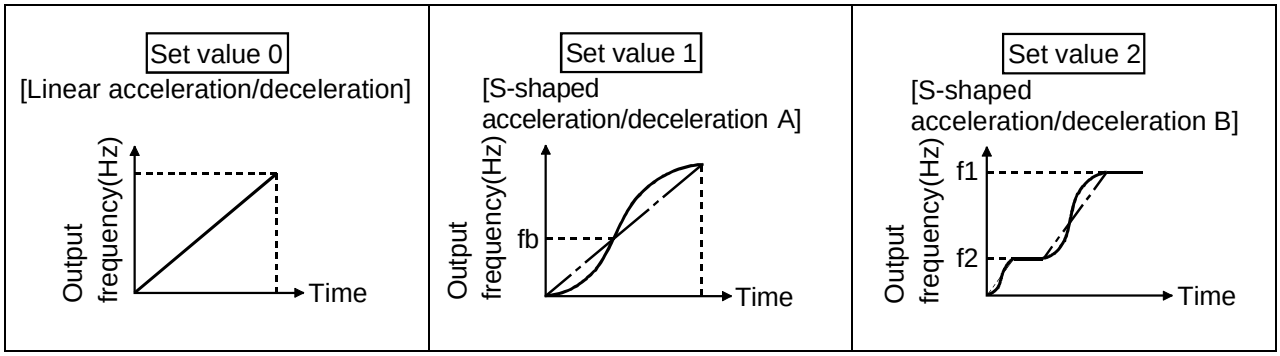

<Setting>

Pr. 29 Setting	Function	Description
0	Linear acceleration/ deceleration	Linear acceleration/deceleration is made up/down to the preset frequency (factory setting).
1	S-shaped acceleration/ deceleration A (Note)	For machine tool spindles This setting is used when it is necessary to make acceleration/deceleration in a short time up to the base frequency or higher speed range. In this acceleration/deceleration pattern, fb (base frequency) is always the inflection point of an S shape, and you can set the acceleration/deceleration time according to the reduction in motor torque in the base frequency or higher constant-output operation range.
2	S-shaped acceleration/ deceleration B	For prevention of cargo collapse on conveyor, etc. This setting provides S-shaped acceleration/deceleration from f2 (current frequency) to f1 (target frequency), easing an acceleration/deceleration shock. This pattern has an effect on the prevention of cargo collapse, etc.

Note: For the acceleration/deceleration time, set the time required to reach the "base frequency" in Pr. 3, not the "acceleration/deceleration reference frequency" in Pr. 20. For details, refer to Pr. 7 and Pr. 8.

4.2.13 Regenerative brake duty (Pr. 30, Pr. 70)

Pr. 30 "regenerative function selection"

Pr. 70 "special regenerative brake duty"

- When making frequent starts/stops, use the optional "brake resistor" to increase the regenerative brake duty. (more than 0.4K)

Parameter Number	Factory Setting	Setting Range
30	0	0,1
70	0%	0 to 30%

<Setting>

(1) When using the brake resistor (MRS), brake unit, high power factor converter

- Set "0" in Pr. 30.
- The Pr. 70 setting is made invalid.

(2) When using the brake resistors (2 MYSs in parallel) (3.7K is only allowed)

- Set "1" in Pr. 30.
- Set "6%" in Pr. 70.

(3) When using the high-duty brake resistor (FR-ABR)

- Set "1" in Pr. 30.
- Set "10%" in Pr. 70.

Note: 1. Pr. 70 "regenerative brake duty" indicates the %ED of the built-in brake transistor operation. The setting should not be higher than the permissible value of the brake resistor used. Otherwise, the resistor can overheat.
2. When Pr. 30 = "0", Pr. 70 is not displayed but the brake duty is fixed at 3%. (Fixed at 2% for 5.5K, 7.5K)
3. The brake resistor cannot be connected to 0.1K and 0.2K inverters.

⚠ WARNING

⚠ **The value set in Pr. 70 should not exceed the value set to the brake resistor used.**
Otherwise, the resistor can overheat.

4.2.14 Frequency jump (Pr. 31 to Pr. 36)

Pr. 31 "frequency jump 1A"

Pr. 32 "frequency jump 1B"

Pr. 33 "frequency jump 2A"

Pr. 34 "frequency jump 2B"

Pr. 35 "frequency jump 3A"

Pr. 36 "frequency jump 3B"

- When it is desired to avoid resonance attributable to the natural frequency of a mechanical system, these parameters allow resonant frequencies to be jumped. Up to three areas may be set, with the jump frequencies set to either the top or bottom point of each area.
- The value set to 1A, 2A or 3A is a jump point and operation is performed at this frequency.

Parameter Number	Factory Setting	Setting Range	Remarks
31	9999	0 to 400Hz, 9999	9999: Function invalid
32	9999	0 to 400Hz, 9999	9999: Function invalid
33	9999	0 to 400Hz, 9999	9999: Function invalid
34	9999	0 to 400Hz, 9999	9999: Function invalid
35	9999	0 to 400Hz, 9999	9999: Function invalid
36	9999	0 to 400Hz, 9999	9999: Function invalid

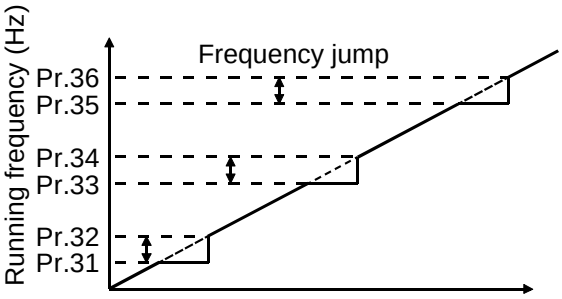

<Setting>

- To fix the frequency at 30Hz between Pr. 33 and Pr. 34 (30Hz and 35Hz), set 35Hz in Pr. 34 and 30Hz in Pr. 33.
- To jump to 35Hz between 30 and 35Hz, set 35Hz in Pr. 33 and 30Hz in Pr. 34.

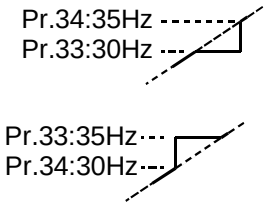

Note: During acceleration/deceleration, the running frequency within the set area is valid.

4.2.15 Speed display (Pr. 37)

Related parameter

Pr. 52 "control panel/PU main display data selection"

Pr. 37 "speed display"

The unit of the output frequency display of the control panel (FR-PA02-02) and PU (FR-PU04) can be changed from the frequency to the motor speed or machine speed.

Parameter Number	Factory Setting	Setting Range	Remarks
37	0	0, 0.01 to 9998	0: Output frequency

<Setting>

- To display the machine speed, set in Pr. 37 the machine speed for 60Hz operation.

Note: 1. The motor speed is converted into the output frequency and does not match the actual speed.
2. To change the control panel monitor (PU main display), refer to Pr. 52.
3. As the control panel display is 4 digits, "----" is displayed when the monitored value exceeds "9999".
4. Only the PU monitor display uses the unit set in this parameter. Set the other speed-related parameters (e.g. Pr. 1) in the frequency unit.
5. Due to the restrictions of the resolution of the set frequency, the displayed value may be different from the setting for the second decimal place.

⚠ CAUTION

⚠ **Make sure that the running speed setting is correct.**
Otherwise, the motor might run at extremely high speed, damaging the machine.

4.2.16 Frequency at 5V (10V) input (Pr. 38)

Related parameters

Pr. 73 "0-5V/0-10V selection"
Pr. 79 "operation mode selection"
Pr. 902 "frequency setting voltage bias"
Pr. 903 "frequency setting voltage gain"

Pr. 38 "frequency at 5V (10V) input"

- You can set the frequency provided when the frequency setting signal from the potentiometer connected across terminals 2-5 (frequency setting potentiometer) is 5VDC (or 10VDC).

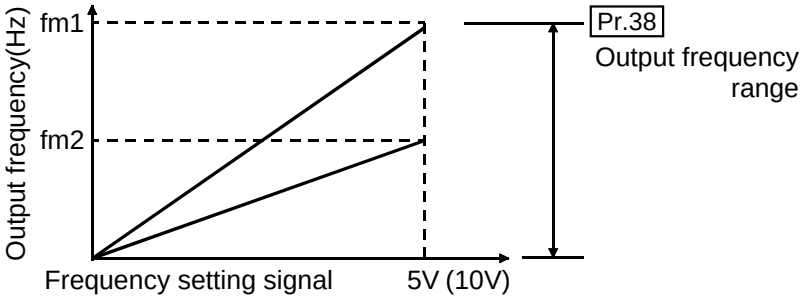

Parameter Number	Factory Setting	Setting Range
38	60Hz	1 to 400Hz

4.2.17 Frequency at 20mA input (Pr. 39)

Related parameters

Pr. 73 "0-5V/0-10V selection"
Pr. 79 "operation mode selection"
Pr. 904 "frequency setting current bias"
Pr. 905 "frequency setting current gain"

Pr. 39 "frequency at 20mA input"

- You can set the frequency provided when the frequency setting signal input across terminals 4-5 is 20mA.

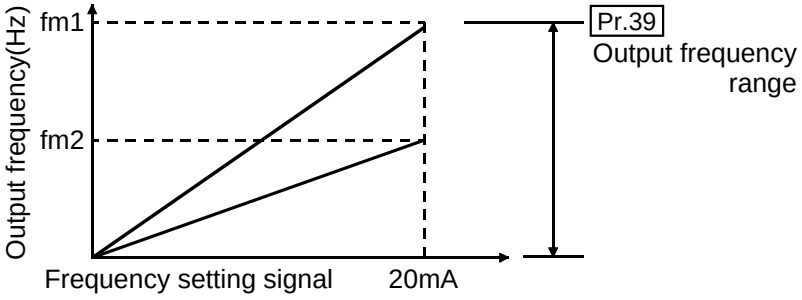

Parameter Number	Factory Setting	Setting Range
39	60Hz	1 to 400Hz

4.2.18 Up-to-frequency sensitivity (Pr. 41)

Related parameters

Pr. 190 "RUN terminal function selection"
Pr. 191 "FU terminal function selection"
Pr. 192 "A, B, C terminal function selection"

Pr. 41 "up-to-frequency sensitivity"

The ON range of the up-to-frequency signal (SU) output when the output frequency reaches the running frequency can be adjusted between 0 and ±100% of the running frequency.
This parameter can be used to ensure that the running frequency has been reached or used as the operation start signal etc. for related equipment.

Parameter Number	Factory Setting	Setting Range
41	10%	0 to 100%

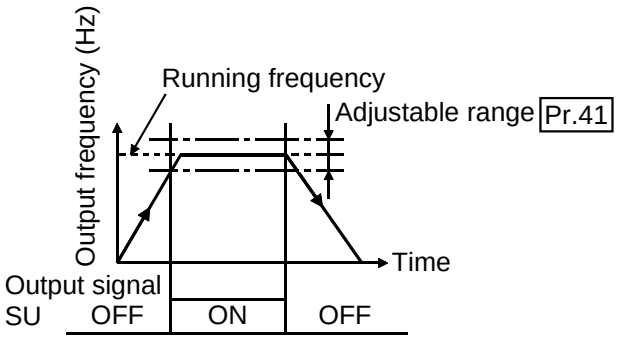

- Use any of Pr. 190 to Pr. 192 to allocate the terminal used for SU signal output. Refer to page 150 for Pr. 190 to Pr. 192 (output terminal function selection).

Note: When terminal assignment is changed using Pr. 190 to Pr. 192, the other functions may be affected. Check the functions of the corresponding terminals before making settings.

4.2.19 Output frequency detection (Pr. 42, Pr. 43)

Related parameters

Pr. 190 "RUN terminal function selection"
Pr. 191 "FU terminal function selection"
Pr. 192 "A, B, C terminal function selection"

Pr. 42 "output frequency detection"

Pr. 43 "output frequency detection for reverse rotation"

The output frequency detection signal (FU) is output when the output frequency reaches or exceeds the setting. This function can be used for electromagnetic brake operation, open signal etc.

- You can also set the detection of the frequency used exclusively for reverse rotation. This function is effective for switching the timing of electromagnetic brake operation between forward rotation (rise) and reverse rotation (fall) during vertical lift operation etc.

Parameter Number	Factory Setting	Setting Range	Remarks
42	6Hz	0 to 400Hz	
43	9999	0 to 400Hz, 9999	9999: Same as Pr. 42 setting

<Setting>

Refer to the figure below and set the corresponding parameters:

- When Pr. 43 ≠ 9999, the Pr. 42 setting applies to forward rotation and the Pr. 43 setting applies to reverse rotation.
- Assign the terminal used for FU signal output with any of Pr. 190 to Pr. 192 (output terminal function selection).
  Refer to page 150 for Pr. 190 to Pr. 192 (output terminal function selection).

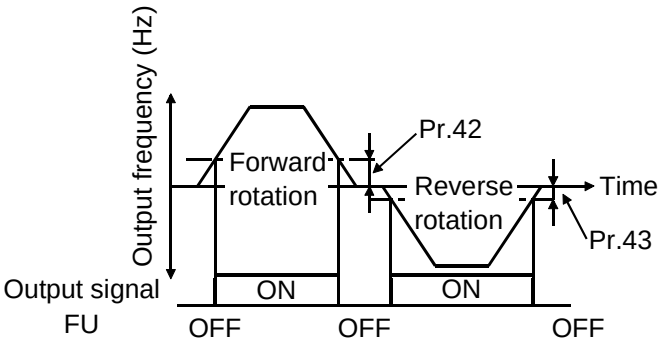

Note:	Changing the terminal assignment using Pr. 190 to Pr. 192 may affect the other functions. Make setting after confirming the function of each terminal.

Pr. 44, Pr. 45 ➔ Refer to Pr. 7.

Pr. 46 ➔ Refer to Pr. 0.

Pr. 47 ➔ Refer to Pr. 3.

Pr. 48 ➔ Refer to Pr. 9

4.2.20 Monitor display (Pr. 52, Pr. 54, Pr. 158)

Pr. 52 "control panel/PU main display data selection"

Pr. 54 "FM terminal function selection"

Pr. 158 "AM terminal function selection"

Related parameters

Pr. 37 "speed display"
Pr. 55 "frequency monitoring reference"
Pr. 56 "current monitoring reference"
Pr. 171 "actual operation hour meter clear"
Pr. 900 "FM terminal calibration"
Pr. 901 "AM terminal calibration"

You can select the signal displayed on the control panel (FR-PA02-02)/parameter unit (FR-PU04) main display screen and the signal output to the FM terminal (100V class, 200V class) and AM terminal (400V class).

<100V class, 200V class>

- Output terminal: Terminal FM (pulse train output)
- Output signal selection: Pr. 54 "FM terminal function selection"

<400V class>

- Output terminal: Terminal AM (analog output)
- Output signal selection: Pr. 158 "AM terminal function selection"

Parameter Number	Factory Setting	Setting Range
52	0	0, 23, 100
54	0	0, 1, 2
158	0	0, 1, 2

<Setting>

Set Pr. 52, Pr. 54 and Pr. 158 in accordance with the following table:

Signal Type	Unit	Parameter Setting				Full-Scale Value of FM, AM Level Meter
		Pr. 52		Pr. 54	Pr. 158	
		Control panel LED	PU main monitor	FM terminal	AM terminal	
Output frequency	Hz	0/100	0/100	0	0	Pr. 55
Output current	A	0/100	0/100	1	1	Pr. 56
Output voltage	——	0/100	0/100	2	2	400V or 800V
Alarm display	——	0/100	0/100	×	×	——
Actual operation time	10h	23	23	×	×	——

When 100 is set in Pr. 52, the monitored values during stop and during operation differ as indicated below:

	Pr. 52		
	0	100	
	During operation/during stop	During stop	During operation
Output frequency	Output frequency	Set frequency	Output frequency
Output current	Output current		
Output voltage	Output voltage		
Alarm display	Alarm display		

Note: 1. During an error, the output frequency at error occurrence is displayed.
2. During MRS, the values are the same as during a stop.
During offline auto tuning, the tuning status monitor has priority.

Note: 1. The monitoring of items marked × cannot be selected.
2. By setting "0" in Pr. 52, the monitoring of "output frequency to alarm display" can be selected in sequence by the SHIFT key.
3. Running speed on the PU main monitor is selected by "other monitor selection" of the parameter unit (FR-PU04).
4. The actual operation time displayed by setting "23" in Pr. 52 is calculated using the inverter operation time. (Inverter stop time is not included.) Set "0" in Pr. 171 to clear it.
5. The actual operation time is calculated from 0 to 99990 hours, then cleared, and recalculated from 0. If the operation time is less than 10 hours there is no display.
6. The actual operation time is not calculated if the inverter has not operated for more than 1 hour continuously.
7. When the control panel is used, the display unit is Hz or A only.

4.2.21 Monitoring reference (Pr. 55, Pr. 56)

Related parameters

Pr. 54 "FM terminal function selection"
Pr. 158 "AM terminal function selection"
Pr. 900 "FM terminal calibration"
Pr. 901 "AM terminal calibration"

Pr. 55 "frequency monitoring reference"

Pr. 56 "current monitoring reference"

Set the frequency or current which is referenced when the output frequency or output current is selected for terminals FM and AM.

Parameter Number	Factory Setting	Setting Range
55	60Hz	0 to 400Hz
56	Rated output current	0 to 500A

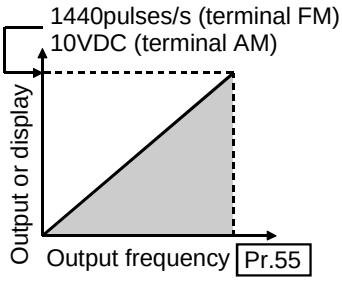

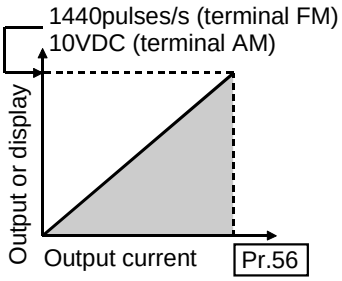

<Setting>

Refer to the above diagrams and set the frequency monitoring reference value in Pr. 55 and the current monitoring reference value in Pr. 56.

(For 200V and 100V class inverters)

Pr. 55 is set when Pr. 54 = 0 and Pr. 56 is set when Pr. 54 = 1.
Set the Pr. 55 and Pr. 56 values so that the output pulse train output of terminal FM is 1440pulses/s.

Note:	The maximum pulse train output of terminal FM is 2400pulses/s. If Pr. 55 is not adjusted, the output of terminal FM will be filled to capacity. Therefore, adjust Pr. 55.

(For 400V class inverter)

Refer to the above diagrams and set the frequency monitoring reference value in Pr. 55 and the current monitoring reference value in Pr. 56.
Pr. 55 is set when Pr. 158 = 0 and Pr. 56 is set when Pr. 158 = 1.
In Pr. 55 and Pr. 56, set the frequency and current at which the output voltage of terminal AM will be 10V.

Note:	The maximum output voltage of terminal AM is 10VDC.

4.2.22 Automatic restart after instantaneous power failure (Pr. 57, Pr. 58)

Pr. 57 "restart coasting time"

Pr. 58 "restart cushion time"

- You can restart the inverter without stopping the motor (with the motor coasting) when power is restored after an instantaneous power failure.

Parameter Number	Factory Setting	Setting Range	Remarks
57	9999	0 to 5 s, 9999	9999: No restart
58	1.0 s	0 to 60 s	

<Setting>

Refer to the following table and set the parameters:

Parameter Number	Setting		Description	
57	0	0.1K to 1.5K	0.5 s coasting time	Generally use this setting.
		2.2K to 7.5K	1.0 s coasting time	
	0.1 to 5 s		Waiting time for inverter-triggered restart after power is restored from an instantaneous power failure. (Set this time between 0.1 s and 5 s according to the inertia moment (J) and torque of the load.)	
	9999		No restart	
58	0 to 60 s		Normally the inverter may be run with the factory settings. These values are adjustable to the load (inertia moment, torque).	

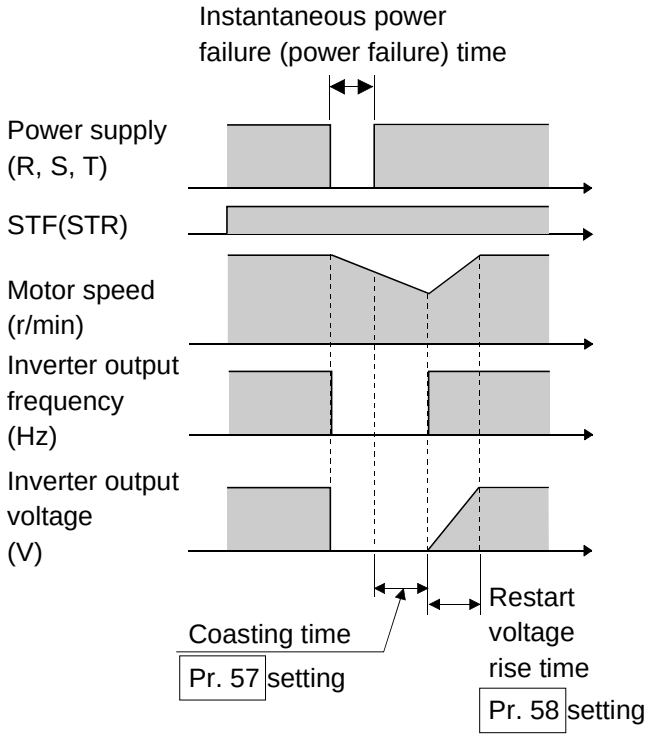

Note: 1. Automatic restart after instantaneous power failure uses a reduced-voltage starting system in which the output voltage is raised gradually with the preset frequency unchanged, independently of the coasting speed of the motor.
As in the FR-A024/A044, a motor coasting speed detection system (speed search system) is not used but the output frequency before an instantaneous power failure is output. Therefore, if the instantaneous power failure time is longer than 0.2 s, the frequency before the instantaneous power failure cannot be stored and the inverter will start at 0Hz.
2. The SU and FU signals are not output during restart but are output after the restart cushion time has elapsed.

⚠ CAUTION

⚠ **When automatic restart after instantaneous power failure has been selected, the motor and machine will start suddenly (after the reset time has elapsed) after occurrence of an instantaneous power failure.**
Stay away from the motor and machine.
When you have selected automatic restart after instantaneous power failure, apply the supplied CAUTION seals in easily visible places.

⚠ **When the start signal is turned off or the STOP RESET key is pressed during the cushion time for automatic restart after instantaneous power failure, deceleration starts after the automatic restart cushion time set in Pr. 58 "cushion time for automatic restart after instantaneous power failure" has elapsed.**

4.2.23 Remote setting function selection (Pr. 59)

Related parameters

Pr. 1 "maximum frequency"
Pr. 7 "acceleration time"
Pr. 8 "deceleration time"
Pr. 18 "high-speed maximum frequency"
Pr. 44 "second acceleration/ deceleration time"
Pr. 45 "second deceleration time"

Pr. 59 "remote setting function selection"

If the operator panel is located away from the control box, you can use contact signals to perform continuous variable-speed operation, without using analog signals.

- By merely setting this parameter, you can use the acceleration, deceleration and setting clear functions of the motorized speed setter (FR-FK).
- When the remote function is used, the output frequency of the inverter can be compensated for as follows:

External operation mode	Frequency set by RH/RM operation plus built-in frequency setting potentiometer or external analog frequency command
PU operation mode	Frequency set by RH/RM operation plus PU's digitally-set frequency

Parameter Number	Factory Setting	Setting Range
59	0	0, 1, 2

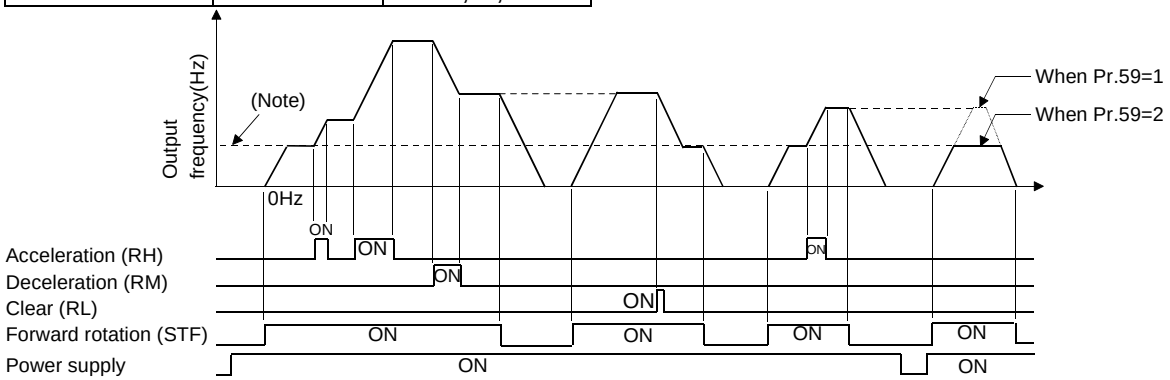

Note: External operation frequency or PU operation frequency other than multi-speed

Pr. 59 Setting	Operation	
	Remote setting function	Frequency setting storage function (E^2PROM)
0	No	——
1	Yes	Yes
2	Yes	No

- Use Pr. 59 to select whether the remote setting function is used or not and whether the frequency setting storage function* in the remote setting mode is used or not. When "remote setting function - yes" is selected, the functions of signals RH, RM and RL are changed to acceleration (RH), deceleration (RM) and clear (RL). Use Pr. 180 to Pr. 183 (input terminal function selection) to set signals RH, RM and RL.

* Frequency setting storage function

The remote setting frequency (frequency set by RH, RM operation) is stored into memory. When power is switched off once, then on again, operation is resumed at this setting of the output frequency. (Pr. 59=1)

<Frequency setting storage condition>

- Frequency at the time when the start signal (STF or STR) has switched off
- Frequency at the time when the RH (acceleration) and RM (deceleration) signals have remained off for more than 1 minute

Note: 1. The frequency can be varied by RH (acceleration) and RM (deceleration) between 0 and the maximum frequency (Pr. 1 or Pr. 18 setting).
2. When the acceleration or deceleration signal switches on, the set frequency varies according to the slope set in Pr. 44 or Pr. 45. The output frequency acceleration/deceleration times are as set in Pr. 7 and Pr. 8, respectively. Therefore, the longer preset times are used to vary the actual output frequency.
3. If the start signal (STF or STR) is off, turning on the acceleration (RH) or deceleration (RM) signal varies the set frequency.

REMARKS

A restart (STF signal ON) after ON-OFF of the clear signal (RL) should be made after more than 1 minute has elapsed. The output frequency provided when a restart is made within 1 minute is the output frequency given after the clear signal (RL) is turned off (multi-speed frequency).

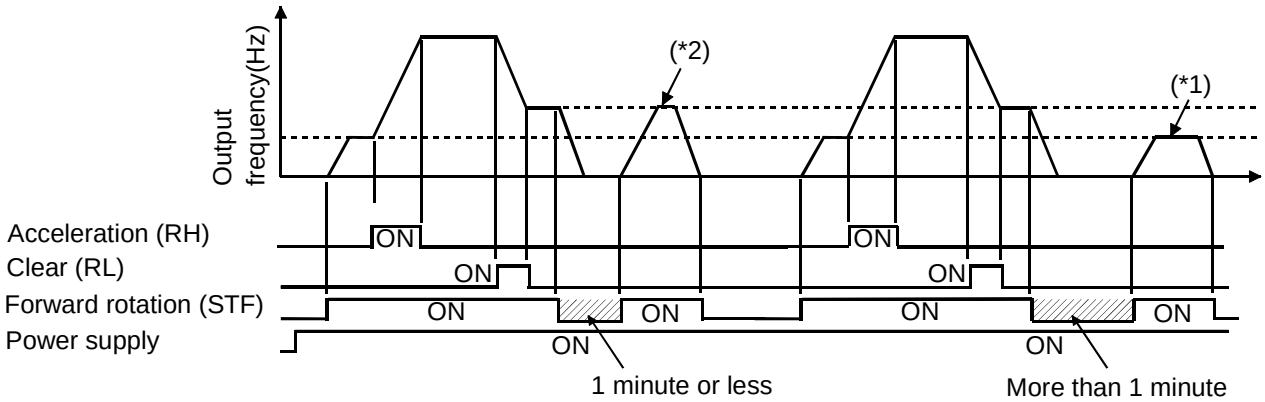

(*1) External operation frequency or PU operation frequency except multi-speed
(*2) Multi-speed frequency

⚠ CAUTION

⚠ **When selecting this function, re-set the maximum frequency according to the machine.**

4

4.2.24 Shortest acceleration/deceleration mode (Pr. 60 to Pr. 63)

Pr. 60 "shortest acceleration/deceleration mode"

Pr. 61 "reference I for intelligent mode"

Pr. 62 "ref. I for intelligent mode accel"

Pr. 63 "ref. I for intelligent mode decel"

Related parameters

Pr. 7 "acceleration time"
Pr. 8 "deceleration time"

The inverter automatically sets appropriate parameters for operation.

- If you do not set the acceleration and deceleration times and V/F pattern, you can run the inverter as if appropriate values had been set in the corresponding parameters. This operation mode is useful to start operation immediately without making fine parameter settings.

Parameter Number	Factory Setting	Setting Range	Remarks
60	0	0, 1, 2, 11, 12	
61	9999	0 to 500A, 9999	9999: Referenced from rated inverter current.
62	9999	0 to 200%, 9999	
63	9999	0 to 200%, 9999	

<Setting>

Pr. 60 Setting	Operation Mode	Description	Automatically Set Parameters
0	Ordinary operation mode	———	———
1, 2, 11, 12	Shortest acceleration/ deceleration mode	Set to accelerate/decelerate the motor in the shortest time. The inverter makes acceleration/deceleration in the shortest time using its full capabilities. During deceleration, an insufficient brake capability may cause the regenerative overvoltage alarm (E.OV3). "1" : Stall prevention operation level 150% "2" : Stall prevention operation level 180% "11": Stall prevention operation level 150% when brake resistor or brake unit is used "12": Stall prevention operation level 180% when brake resistor or brake unit is used	Pr. 7, Pr. 8

<Setting>

- Set the parameters when it is desired to improve the performance in the shortest acceleration/deceleration mode.

(1) Pr. 61 "reference I for intelligent mode"

Setting	Reference Current
9999 (factory setting)	Referenced from rated inverter current
0 to 500A	Referenced from setting (rated motor current)

(2) Pr. 62 "ref. I for intelligent mode accel"

The reference current setting can be changed.

Setting	Reference Current
9999 (factory setting)	150% (180%) is the limit value.
0 to 200%	The setting of 0 to 200% is the limit value.

(3) Pr. 63 "ref. I for intelligent mode decel"

The reference current setting can be changed.

Setting	Reference Current
9999 (factory setting)	150% (180%) is the limit value.
0 to 200%	The setting of 0 to 200% is the limit value.

Note: Pr. 61 to Pr. 63 are only valid when any of "1, 2, 11, 12" are selected for Pr. 60.

4.2.25 Retry function (Pr. 65, Pr. 67 to Pr. 69)

Pr. 65 "retry selection"

Pr. 67 "number of retries at alarm occurrence"

Pr. 68 "retry waiting time"

Pr. 69 "retry count display erasure"

When any protective function (major fault) is activated and the inverter stops its output, the inverter itself resets automatically and performs retries. You can select whether retry is made or not, alarms reset for retry, number of retries made, and waiting time.

Parameter Number	Factory Setting	Setting Range
65	0	0 to 3
67	0	0 to 10, 101 to 110
68	1 s	0.1 to 360 s
69	0	0

<Setting>

Use Pr. 65 to select the protective functions (major faults) which execute retry.

Errors Reset for Retry	Setting			
Display	0	1	2	3
E.OC1	●	●		●
E.OC2	●	●		●
E.OC3	●	●		●
E.OV1	●		●	●
E.OV2	●		●	●
E.OV3	●		●	●
E.THM	●			
E.THT	●			
E.FIN				
E. BE	●			
E. GF	●			
E.LF				
E.OHT	●			
E.OLT	●			
E.OPT	●			
E. PE	●			
E.PUE				
E.RET				
E.CPU				
E. 6				
E. 7				

Note: ● indicates the retry items selected.

Use Pr. 67 to set the number of retries at alarm occurrence.

Pr. 67 Setting	Number of Retries	Alarm Signal Output
0	Retry is not made.	————
1 to 10	1 to 10 times	Not output.
101 to 110	1 to 10 times	Output.

- Use Pr. 68 to set the waiting time from when an inverter alarm occurs until a restart in the range 0.1 to 360 seconds.
- Reading the Pr. 69 value provides the cumulative number of successful restart times made by retry. The setting of "0" erases the cumulative number of times.

Note: 1. The cumulative number in Pr. 69 is incremented by "1" when retry operation is regarded as successful, i.e. when normal operation is continued without the protective function (major fault) activated during a period five times longer than the time set in Pr. 68.
2. If the protective function (major fault) is activated consecutively within a period five times longer than the above waiting time, the control panel may show data different from the most recent data or the parameter unit (FR-PU04) may show data different from the first retry data. The data stored as the error reset for retry is only that of the protective function (major fault) which was activated the first time.
3. When an inverter alarm is reset by the retry function at the retry time, the stored data of the electronic over current protection, etc. are not cleared. (Different from the power-on reset.)

⚠ CAUTION

⚠ **When you have selected the retry function, stay away from the motor and machine unless required. They will start suddenly (after the reset time has elapsed) after occurrence of an alarm.**
When you have selected the retry function, apply the supplied CAUTION seals in easily visible places.

Pr. 66 ➔ Refer to Pr. 22.

Pr. 70 ➔ Refer to Pr. 30.

4.2.26 Applied motor (Pr. 71)

Pr. 71 "applied motor"

Related parameters

Pr. 0 "torque boost"
Pr. 12 "DC injection brake voltage"
Pr. 19 "base frequency voltage"
Pr. 80 "motor capacity"
Pr. 96 "auto-tuning setting/status"

Set the motor used.

- When using the Mitsubishi constant-torque motor, set "1" in Pr. 71 for either V/F control or general-purpose magnetic flux vector control.
  The electronic overcurrent protection is set to the thermal characteristic of the constant-torque motor.

Parameter Number	Factory Setting	Setting Range
71	0	0, 1, 3, 5, 6, 13, 15, 16, 23, 100, 101, 103, 105, 106, 113, 115, 116, 123

<Setting>

- Refer to the following list and set this parameter according to the motor used.

<table>
<tr><th rowspan="2">Pr. 71 Setting</th><th colspan="3" rowspan="2">Thermal Characteristics of Electronic Overcurrent Protection</th><th colspan="2">Applied motor</th></tr>
<tr><th>Standard</th><th>Constant-Torque</th></tr>
<tr><td>0, 100</td><td colspan="3">Thermal characteristics matching a standard motor</td><td>○</td><td></td></tr>
<tr><td>1, 101</td><td colspan="3">Thermal characteristics matching the Mitsubishi constant-torque motor</td><td></td><td>○</td></tr>
<tr><td>3, 103</td><td>Standard motor</td><td colspan="2" rowspan="3">Select "offline auto tuning setting".</td><td>○</td><td></td></tr>
<tr><td>13, 113</td><td>Constant-torque motor</td><td></td><td>○</td></tr>
<tr><td>23, 123</td><td>Mitsubishi general-purpose motor SF-JR4P (1.5kW (2HP) or less)</td><td>○</td><td></td></tr>
<tr><td>5, 105</td><td>Standard motor</td><td rowspan="2">Star connection</td><td rowspan="4">Motor constants can be entered directly.</td><td>○</td><td></td></tr>
<tr><td>15, 115</td><td>Constant-torque motor</td><td></td><td>○</td></tr>
<tr><td>6, 106</td><td>Standard motor</td><td rowspan="2">Delta connection</td><td>○</td><td></td></tr>
<tr><td>16, 116</td><td>Constant-torque motor</td><td></td><td>○</td></tr>
</table>

By setting any of "100 to 123", the electronic overcurrent protection thermal characteristic (applied motor) can be changed as indicated below according to the ON/OFF status of the RT signal:

RT Signal	Electronic Overcurrent Protection Thermal Characteristic (Applied Motor)
OFF	As indicated in the above table
ON	Constant-torque motor

⚠ CAUTION

⚠ **Set this parameter correctly according to the motor used.**
Incorrect setting may cause the motor to overheat and burn.

4.2.27 PWM carrier frequency (Pr. 72, Pr. 240)

Pr. 72 "PWM frequency selection"

Pr. 240 "Soft-PWM setting"

You can change the motor tone.

- By parameter setting, you can select Soft-PWM control which changes the motor tone.
- Soft-PWM control changes motor noise from a metallic tone into an unoffending complex tone.

Parameter Number	Factory Setting	Setting Range	Remarks
72	1	0 to 15	0 : 0.7kHz, 15 : 14.5kHz
240	1	0, 1	1: Soft-PWM valid

<Setting>

- Refer to the following list and set the parameters:

Parameter Number	Setting	Description
72	0 to 15	PWM carrier frequency can be changed. The setting displayed is in [kHz]. Note that 0 indicates 0.7kHz and 15 indicates 14.5kHz.
240	0	Soft-PWM invalid
	1	When any of "0 to 5" is set in Pr. 72, Soft-PWM is made valid.

Note: 1. Note that when the inverter is run at the ambient temperature above 40°C (104°F) with a 2kHz or higher value set in Pr. 72, the rated output current of the inverter must be reduced. (Refer to page 191 (depending upon the inverter).)

2. An increased PWM frequency will decrease motor noise but noise and leakage current will increase. Take proper action (refer to pages 35 to 39).

4.2.28 Voltage input (Pr. 73)

Pr. 73 "0-5V/0-10V selection"

Related parameters

Pr. 22 "stall prevention operation level"
Pr. 38 "frequency at 5V (10V) input"

- You can change the input (terminal 2) specifications in response to the frequency setting voltage signal. When entering 0 to 10VDC, always make this setting.

Parameter Number	Factory Setting	Setting Range
73	0	0, 1

Setting	Terminal 2 Input Voltage
0	For 0 to 5VDC input (factory setting)
1	For 0 to 10VDC input

Note: 1. To change the maximum output frequency at the input of the maximum frequency command voltage, use Pr. 38. Also, the acceleration/deceleration time, which is a slope up/down to the acceleration/deceleration reference frequency, is not affected by the change in Pr. 73 setting.
2. When connecting a frequency setting potentiometer across terminals 10-2-5 for operation, always set "0" in this parameter.

4.2.29 Input filter time constant (Pr. 74)

Pr. 74 "filter time constant"

You can set the input section's internal filter constant for an external voltage or current frequency setting signal.

- Effective for eliminating noise in the frequency setting circuit.
- Increase the filter time constant if steady operation cannot be performed due to noise. A larger setting results in slower response. (The time constant can be set between approximately 1ms to 1s with the setting of 0 to 8. A larger setting results in a larger filter time constant.)

Parameter Number	Factory Setting	Setting Range
74	1	0 to 8

4.2.30 Reset selection/disconnected PU detection/PU stop selection (Pr. 75)

Pr. 75 "reset selection/disconnected PU detection/PU stop selection"

You can select the reset input acceptance, control panel (FR-PA02-02) or PU (FR-PU04) connector disconnection detection function and PU stop function.

- Reset selection :You can select the reset function input timing.
- PU disconnection detection :When it is detected that the control panel (FR-PA02-02)/PU(FR-PU04) is disconnected from the inverter for more than 1 second, the inverter outputs an alarm code (E.PUE) and comes to an alarm stop.
- PU stop selection :When an alarm occurs in any operation mode, you can stop the inverter from the PU by pressing the STOP RESET key.

Parameter Number	Factory Setting	Setting Range
75	14	0 to 3, 14 to 17

<Setting>

Pr. 75 Setting	Reset Selection	PU Disconnection Detection	PU Stop Selection
0	Reset input normally enabled.	If the PU is disconnected, operation will be continued.	Pressing the STOP RESET key decelerates the inverter to a stop only in the PU operation mode.
1	Reset input enabled only when the protective function is activated.		
2	Reset input normally enabled.	When the PU is disconnected, an error is displayed on the PU and the inverter output is shut off.	
3	Reset input enabled only when the protective function is activated.		
14	Reset input normally enabled.	If the PU is disconnected, operation will be continued.	Pressing the STOP RESET key decelerates the inverter to a stop in any of the PU, external and communication operation modes.
15	Reset input enabled only when the protective function is activated.		
16	Reset input normally enabled.	When the PU is disconnected, an error is displayed on the PU and the inverter output is shut off.	
17	Reset input enabled only when the protective function is activated.		

How to make a restart after a stop by the STOP RESET key on the PU

(1) Control panel (FR-PA02-02)

1) After completion of deceleration to a stop, switch off the STF or STR signal.
2) Press the MODE key two times* to display OP.Md.

> Note: When Pr. 79 = 3, press the MODE key three times to display PU. Then, press the ▼ key and proceed to step 3).

(For the monitor screen) ..... Refer to page 52 for the monitor display provided by pressing the MODE key.

3) Press the SET key.
4) Switch on the STF or STR signal.

(2) Parameter unit (FR-PU04)

1) After completion of deceleration to a stop, switch off the STF or STR signal.
2) Press the EXT key.
3) Switch on the STF or STR signal.

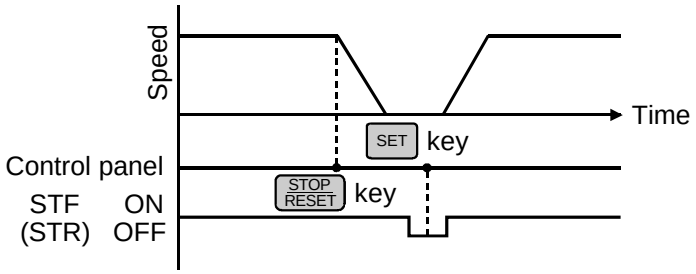

Stop and restart example for external operation

The other way of making a restart other than the above method is to perform a power-reset or to make a reset with the inverter reset terminal.

Note: 1. By entering the reset signal (RES) during operation, the inverter shuts off output while it is reset, the data of the electronic overcurrent protection and regenerative brake duty are reset, and the motor coasts.
2. The PU disconnection detection function judges that the PU is disconnected when it is removed from the inverter for more than 1 second. If the PU had been disconnected before power-on, it is not judged as an alarm.
3. To resume operation, reset the inverter after confirming that the PU is connected securely.
4. The Pr. 75 value can be set any time. Also, if parameter (all) clear is executed, this setting will not return to the initial value.
5. When the inverter is stopped by the PU stop function, PS is displayed but an alarm is not output.
When the PU connector is used for RS-485 communication operation, the reset selection and PU stop selection functions are valid but the PU disconnection detection function is invalid.

⚠ CAUTION

⚠ **Do not reset the inverter with the start signal on.**
Otherwise, the motor will start instantly after resetting, leading to potentially hazardous conditions.

4.2.31 Parameter write inhibit selection (Pr. 77)

Related parameters
Pr. 79 "operation mode selection"

Pr. 77 "parameter write disable selection"

You can select between write-enable and disable for parameters. This function is used to prevent parameter values from being rewritten by incorrect operation.

Parameter Number	Factory Setting	Setting Range
77	0	0, 1, 2

<Setting>

Pr. 77 Setting	Function
0	Parameter values may only be written during a stop in the PU operation mode. (Note 1)
1	Write disabled. Values of Pr. 22, Pr. 75, Pr. 77 and Pr. 79 "operation mode selection" can be written.
2	Write enabled even during operation.

Note: 1. The parameters half-tone screened in the parameter list can be set at any time.
2. If Pr. 77 = "2", the values of Pr. 23, Pr. 66, Pr. 71, Pr. 79, Pr. 80, Pr. 83, Pr. 84, Pr. 96, Pr. 180 to Pr. 183 and Pr. 190 to Pr. 192 cannot be written during operation.
Stop operation when changing their parameter settings.
3. By setting "1" in Pr. 77, the following clear operations can be inhibited:
• Parameter clear
• Parameter all clear

4.2.32 Reverse rotation prevention selection (Pr. 78)

Pr. 78 "reverse rotation prevention selection"

Related parameters
Pr. 79 "operation mode selection"

This function can prevent any reverse rotation fault resulting from the incorrect input of the start signal.

- Used for a machine which runs only in one direction, e.g. fan, pump.
  (The setting of this function is valid for the combined, PU, external and communication operations.)

Parameter Number	Factory Setting	Setting Range
78	0	0, 1, 2

<Setting>

Pr. 78 Setting	Function
0	Both forward and reverse rotations allowed
1	Reverse rotation disallowed
2	Forward rotation disallowed

4.2.33 Operation mode selection (Pr. 79)

Related parameters

Pr. 4 to Pr. 6, Pr. 24 to Pr. 27, Pr. 232 to Pr. 239 "multi-speed operation"
Pr. 180 to Pr. 183 (input terminal function selection)

Pr. 79 "operation mode selection"

Used to select the operation mode of the inverter.
The inverter can be run from the control panel or parameter unit (PU operation), with external signals (external operation), or by combination of PU operation and external operation (external/PU combined operation).
When power is switched on (factory setting), the External operation mode is selected.

Parameter Number	Factory Setting	Setting Range
79	0	0 to 4, 6 to 8

<Setting>

In the following table, operation using the control panel or parameter unit is abbreviated to PU operation.

Pr. 79 Setting	Function		
0	When power is switched on, the external operation mode is selected. PU or external operation can be selected by pressing the keys of the control panel or parameter unit. (Refer to page 55) For these modes, refer to the setting 1 and 2 below.		
	Operation mode	Running frequency	Start signal
1	PU operation mode	Digital setting by key operation of the control panel or parameter unit	RUN (FWD, REV) key of control panel or FWD or REV key of parameter unit
2	External operation mode	External signal input (across terminals 2 (4)-5, multi-speed selection)	External signal input (terminal STF, STR)
3	External/PU combined operation mode 1	Digital setting made by the key operation of the control panel or parameter unit, or external signal input (multi-speed setting only)	External signal input (terminal STF, STR)
4	External/PU combined operation mode 2	External signal input (across terminals 2 (4)-5, multi-speed selection)	RUN (FWD, REV) key of control panel or FWD or REV key of parameter unit
6	Switch-over mode Switch-over between PU and external operation modes can be done while running.		
7	External operation mode (PU operation interlock) MRS signal ON ..... Able to be switched to PU operation mode (output stop during external operation) MRS signal OFF ..... Switching to PU operation mode inhibited		
8	Switching to other than external operation mode (disallowed during operation) X16 signal ON..... Switched to external operation mode X16 signal OFF..... Switched to PU operation mode		

Note: Either "3" or "4" may be set to select the PU/external combined operation. These settings differ in starting method.

(1) Switch-over mode

During operation, you can change the current operation mode to another operation mode.

Operation Mode Switching	Switching Control/Operating Status
External operation to PU operation	1) Operate the control panel keys to select the PU operation mode. • Rotation direction is the same as that of external operation. • Set frequency is the same as the external frequency setting signal value. (Note that the setting will disappear when power is switched off or the inverter is reset.)
PU operation to external operation	1) Operate the control panel keys to select the external operation mode. • Rotation direction is determined by the external operation input signal. • Set frequency is determined by the external frequency setting signal.

(2) PU operation interlock

PU operation interlock forces the operation mode to be changed to the external operation mode when the MRS signal switches off. This function prevents the inverter from being inoperative by the external command if the mode is accidentally left unswitched from the PU operation mode.

1) Preparation

- Set "7" in Pr. 79 (PU operation interlock).
- Set the terminal used for MRS signal input with any of Pr. 180 to Pr. 183 (input terminal function selection).
  Refer to page 148 for Pr. 180 to Pr. 183 (input terminal function selection).

Note: When terminal assignment is changed using Pr. 180 to Pr. 183, the other functions may be affected.
Check the functions of the corresponding terminals before making settings.

2) Function

MRS Signal	Function/Operation
ON	Output stopped during external operation. Operation mode can be switched to PU operation mode. Parameter values can be rewritten in PU operation mode. PU operation allowed.
OFF	Forcibly switched to external operation mode. External operation allowed. Switching to PU operation mode inhibited.

<Function/operation changed by switching on-off the MRS signal>

Operating Condition		MRS Signal	Opera-tion Mode (Note 4)	Operating Status	Parameter Write	Switching to PU Operation Mode
Operation mode	Status					
PU	During stop	ON → OFF (Note 3)	External	During stop	Allowed → disallowed	Disallowed
	During operation	ON → OFF (Note 3)		If external operation frequency setting and start signal are entered, operation is performed in that status.	Allowed → disallowed	Disallowed
External	During stop	OFF → ON	External	During stop	Disallowed → disallowed	Allowed
		ON → OFF			Disallowed → disallowed	Disallowed
	During operation	OFF → ON		During operation → output stop	Disallowed → disallowed	Disallowed
		ON → OFF		Output stop → operation	Disallowed → disallowed	Disallowed

Note: 1. If the MRS signal is on, the operation mode cannot be switched to the PU operation mode when the start signal (STF, STR) is on.
2. The operation mode switches to the external operation mode independently of whether the start signal (STF, STR) is on or off.
Therefore, the motor is run in the external operation mode when the MRS signal is switched off with either of STF and STR on.
3. When the protective function (major fault) is activated, the inverter can be reset by pressing the STOP RESET key of the control panel.
4. Switching the MRS signal on and rewriting the Pr. 79 value to other than "7" in the PU operation mode causes the MRS signal to provide the ordinary MRS function (output stop). Also as soon as "7" is set in Pr. 79, the operation mode is switched to PU operation mode.

(3) Operation mode switching by external signal

1) Preparation
Set "8" (switching to other than external operation mode) in Pr. 79.
Use any of Pr. 180 to Pr. 183 (input terminal function selection) to set the terminal used for X16 signal input.
Refer to page 148 for Pr. 180 to Pr. 183 (input terminal function selection).

Note: When terminal assignment is changed using Pr. 180 to Pr. 183, the other functions may be affected.
Check the functions of the corresponding terminals before making settings.

2) Function
This switching is enabled during an inverter stop only and cannot be achieved during operation.

X16 Signal	Operation Mode
ON	External operation mode (cannot be changed to the PU operation mode)
OFF	PU operation mode (cannot be changed to the external operation mode)

4.2.34 General-purpose magnetic flux vector control selection (Pr. 80)

Pr. 80 "motor capacity"

Related parameters
Pr. 71 "applied motor"
Pr. 83 "rated motor voltage"
Pr. 84 "rated motor frequency"
Pr. 96 "auto-tuning setting/status"

You can set the general-purpose magnetic flux vector control.

- General-purpose magnetic flux vector control
  Provides large starting torque and sufficient low-speed torque.
  If the motor constants vary slightly, stable, large low-speed torque is provided without specific motor constant setting or tuning.

Parameter Number	Factory Setting	Setting Range	Remarks
80	9999	0.1kW to 7.5kW, 9999 (Note)	9999: V/F control

Note: The setting range changes with the inverter: 0.2kW to 7.5kW, 9999 for the 400V class.

If any of the following conditions are not satisfied, faults such as torque shortage and speed fluctuation may occur. In this case, select V/F control.

<Operating conditions>

- The motor capacity is equal to or one rank lower than the inverter capacity.
- The number of motor poles is any of 2, 4, and 6. (4 poles only for the constant-torque motor)
- Single-motor operation (one motor for one inverter) is performed.
- The wiring length between the inverter and motor is within 30m (98.42 feet). (If the length is over 30m (98.42 feet), perform offline auto tuning with the cables wired.)

<Setting>

(1) General-purpose magnetic flux vector control

- By setting the capacity of the motor used in Pr. 80, you can choose general-purpose magnetic flux vector control.

Parameter Number	Setting	Description	
80	9999	V/F control	
	0.1 to 7.5/ 0.2 to 7.5 (Note)	Set the motor capacity applied.	General-purpose magnetic flux vector control

Note: The setting range changes with the inverter: 0.2kW to 7.5kW, 9999 for the 400V class.

- When using Mitsubishi's constant-torque motor (SF-JRCA), set "1" in Pr. 71. (When using the SF-JRC, perform the offline auto tuning.)

4.2.35 Offline auto tuning function (Pr. 82 to Pr. 84, Pr. 90, Pr. 96)

Related parameters

Pr. 7 "acceleration time"
Pr. 9 "electronic thermal O/L relay "
Pr. 71 "applied motor"
Pr. 79 "operation mode selection"
Pr. 80 "motor capacity"

Pr. 82 "motor exciting current"

Pr. 83 "rated motor voltage"

Pr. 84 "rated motor frequency"

Pr. 90 "motor constant (R1)"

Pr. 96 "auto-tuning setting/status"

What is auto tuning?
(1) The general-purpose magnetic flux vector control system gets the best performance from the motor for operation.
(2) Using the offline auto tuning function to improve the operational performance of the motor.

When you use the general-purpose magnetic flux vector control, you can perform the offline auto tuning operation to calculate the motor constants automatically.

- Offline auto tuning is made valid only when Pr. 80 is set to other than "9999" to select the general-purpose magnetic flux vector control.
- The Mitsubishi standard motor (SF-JR0.4kW or more) or Mitsubishi constant-torque motor (By SF-JRCA 200V class and 4-pole motor of 0.4kW to 7.5kW) allows general-purpose magnetic flux vector control operation to be performed without using the offline auto tuning function. However, if any other motor (Motor made of the other manufacturers SF-JRC, etc.) is used or the wiring distance is long, using the offline auto tuning function allows the motor to be operated with the optimum operational characteristics.
- Offline auto tuning
  Automatically measures the motor constants used for general-purpose magnetic flux vector control.
  - Offline auto tuning can be performed with the load connected. (As the load is smaller, tuning accuracy is higher. Tuning accuracy does not change if inertia is large.)
  - The offline auto tuning status can be monitored with the control panel (FR-PA02-02) or PU (FR-PU04).
  - Only a static auto tune can be performed.
  - Offline auto tuning is available only when the motor is at a stop.
- Tuning data (motor constants) can be copied to another inverter with the PU (FR-PU04).
  - You can read, write and copy the motor constants tuned by the offline auto tuning.

Parameter Number	Factory Setting	Setting Range	Remarks
82	9999	0 to 500A, 9999	9999: Mitsubishi standard motor
83	200V/400V	0 to 1000V	Rated inverter voltage
84	60Hz	50 to 120Hz	
90	9999	0 to 50Ω, 9999	9999: Mitsubishi standard motor
96	0	0, 1	0: No tuning

<Operating conditions>

- The motor is connected.
- The motor capacity is equal to or one rank lower than the inverter capacity.
- Special motors such as high-slip motors and high-speed motors cannot be tuned.
- The motor may move slightly. Therefore, fix the motor securely with a mechanical brake, or before tuning, make sure that there will be no problem in safety if the motor runs.
  *This instruction must be followed especially for vertical lift applications.
  If the motor runs slightly, tuning performance is unaffected.
- Offline auto tuning will not be performed properly if it is started when a reactor or surge voltage suppression filter (FR-ASF-H) is connected between the inverter and motor. Remove it before starting tuning.

<Setting>

(1) Parameter setting

- Set the motor capacity (kW) in Pr. 80 and select the general-purpose magnetic flux vector control.
- Refer to the parameter details list and set the following parameters:

1) Set "1" in Pr. 96.
2) Set the rated motor current (A) in Pr. 9.
3) Set the rated motor voltage (V) in Pr. 83.
4) Set the rated motor frequency (Hz) in Pr. 84.
5) Select the motor using Pr. 71.
   - Standard motor ..... Pr. 71 = "3" or "103"
   - Constant-torque motor ..... Pr. 71 = "13" or "113"
   - Mitsubishi standard motor
     SF-JR 4 poles (1.5kW (2HP) or less)..... Pr. 71 = "23" or "123"

Note:	Pr. 83 and Pr. 84 are only displayed when the general-purpose magnetic flux vector control is selected. In these parameters, set the values given on the motor plate. Set 200V/60Hz or 400V/60Hz if the standard or other motor has more than one rated value. After tuning is over, set the Pr. 9 "electronic overcurrent protection" value to the rated current at the operating voltage/frequency.

■ **Parameter details**

Parameter Number	Setting	Description		
9	0 to 500A	Set the rated motor current (A).		
71 (Note)	0, 100	Thermal characteristics suitable for standard motor		
	1, 101	Thermal characteristics suitable for Mitsubishi's constant-torque motor		
	3, 103	Standard motor		Select "offline auto tuning setting"
	13, 113	Constant-torque motor		
	23, 123	Mitsubishi's SF-JR4P standard motor (1.5kW (2HP) or less)		
	5, 105	Standard motor	Star connection	Direct input of motor constants enabled
	15, 115	Constant-torque motor		
	6, 106	Standard motor	Delta connection	
	16, 116	Constant-torque motor		
83	0 to 1000V	Set the rated motor voltage (V).		
84	50 to 120Hz	Set the rated motor frequency (Hz).		
90	0 to 50Ω, 9999	Tuning data (Values measured by offline auto tuning are set automatically.)		
96	0	Offline auto tuning is not performed.		
	1	Offline auto tuning is performed.		

Note: The electronic overcurrent protection characteristics are also selected simultaneously. By setting any of "100 to 123", the electronic overcurrent protection changes to the thermal characteristic of the constant-torque motor when the RT signal switches on.

(2) Tuning execution

- For PU operation or combined operation 2, press the FWD or REV key.
- For external operation or combined operation 1, switch on the run command.

Note: 1. To force tuning to end
- Switch on the MRS or RES signal or press the STOP RESET key to end.
- Switch off the tuning start command to make a forced end.

2. During offline auto tuning, only the following I/O signals are valid:
- Input signals
  <Valid signals>
  MRS, RES, STF, STR
- Output signals
  RUN, FM, AM, A, B, C

3. Special caution should be exercised when a sequence has been designed to open the mechanical brake with the RUN signal.

(3) Monitoring the offline tuning status

When the parameter unit (FR-PU04) is used, the Pr. 96 value is displayed during tuning on the main monitor as shown below. When the control panel is used, the same value as on the PU is only displayed:

- Control panel display (FR-PA02-02)

(For inverter trip)

	1. Setting	2. Tuning in progress	3. Completion	4. Error-activated end
Displayed value	1 →	2 →	3	9

- Parameter unit (FR-PU04) main monitor

(For inverter trip)

	1. Setting	2. Tuning in progress	3. Completion	4. Error-activated end
Display	1 ---STOP PU →	TUNE 2 STF FWD PU →	TUNE 3 COMPLETION STF STOP PU →	TUNE ERROR 9 STF STOP PU

- Reference: Offline auto tuning time (factory setting) is about 10 seconds.

(4) Ending the offline auto tuning

1) Confirm the Pr. 96 value.
   - Normal end: "3" is displayed.
   - Abnormal end: "9", "91", "92" or "93" is displayed.
   - Forced end: "8" is displayed.

2) When tuning ended normally
   For PU operation or combined operation 2, press the STOP RESET key. For external operation or combined operation 1, switch off the start signal (STF or STR) once.
   This operation resets the offline auto tuning and the PU's monitor display returns to the ordinary indication. (Without this operation, next operation cannot be done.)

3) When tuning was ended due to an error
   Offline auto tuning did not end normally. (The motor constants have not been set.)
   Reset the inverter and start tuning all over again.

4) Error display definitions

Error Display	Error Cause	Remedy
9	Inverter trip	Make setting again.
91	Current limit (stall prevention) function was activated.	Increase acceleration/deceleration time. Set "1" in Pr. 156.
92	Converter output voltage reached 75% of rated value.	Check for fluctuation of power supply voltage.
93	Calculation error	Check the motor wiring and make setting again.

No connection with motor will result in a calculation (93) error.

5) When tuning was forced to end

An forced end occurs when you forced the tuning to end by pressing the STOP RESET key or switching off the start signal (STF or STR) during tuning.
In this case, the offline auto tuning has not ended normally.
(The motor constants are not set.)
Reset the inverter and restart the tuning.

Note: 1. The R1 motor constant measured during in the offline auto tuning is stored as a parameter and its data is held until the offline auto tuning is performed again.
2. An instantaneous power failure occurring during tuning will result in a tuning error.
After power is restored, the inverter goes into the ordinary operation mode. Therefore, when STF (STR) is on, the motor runs in forward (reverse) rotation.
3. Any alarm occurring during tuning is handled as in the ordinary mode. Note that if an error retry has been set, retry is ignored.
4. The set frequency monitor displayed during the offline auto tuning is 0Hz.

⚠ CAUTION

⚠ **When the offline auto tuning is used in vertical lift application, e.g. a lifter, it may drop due to insufficient torque.**

<Setting the motor constant as desired>

- To set the motor constant without using the offline auto tuning data

<Operating procedure>

1. Set any of the following values in Pr. 71:

		Star Connection Motor	Delta Connection Motor
Setting	Standard motor	5 or 105	6 or 106
	Constant-torque motor	15 or 115	16 or 116

By setting any of "105 to 116", the electronic overcurrent protection changes to the thermal characteristics of the constant-torque motor when the RT signal switches on.

2. Set "801" in Pr. 77.
   (Only when the Pr. 80 setting is other than "9999", the parameter values of the motor exciting current (Pr. 82) and motor constant (Pr. 90) can be displayed. Though the parameter values other than Pr. 82 and Pr. 90 can also be displayed, they are parameters for manufacturer setting and should be handled carefully without misuse.)

3. In the parameter setting mode, read the following parameters and set desired values:

Parameter Number	Name	Setting Range	Setting Increments	Factory Setting
82	Motor exciting current	0 to 500A, 9999	0.01A	9999
90	Motor constant (R1)	0 to 10Ω, 9999	0.001Ω	9999

4. Return the Pr. 77 setting to the original value.

5. Refer to the following table and set Pr. 84:

Parameter Number	Name	Setting Range	Setting Increments	Factory Setting
84	Rated motor frequency	50 to 120Hz	0.01Hz	60Hz

Note: 1. The Pr. 90 value may only be read when general-purpose magnetic flux vector control has been selected.
2. Set "9999" in Pr. 90 to use the standard motor constant (including that for the constant-torque motor).
3. If "star connection" is mistaken for "delta connection" or vice versa during setting of Pr. 71, general-purpose magnetic flux vector control cannot be exercised normally.

4.2.36 Computer link operation (Pr. 117 to Pr. 124, Pr. 342)

Pr. 117 "station number"
Pr. 118 "communication speed"
Pr. 119 "stop bit length"
Pr. 120 "parity check presence/absence"
Pr. 121 "number of communication retries"
Pr. 122 "communication check time interval"
Pr. 123 "waiting time setting"
Pr. 124 " CR·LF presence/absence selection"
Pr. 342 "E^{2}PROM write selection" (400V class only)

Used to perform required settings for RS-485 communication between the inverter and personal computer.
Using the inverter setup software (FR-SW0-SETUP-WE), you can perform parameter setting, monitoring, etc. efficiently.

- **The motor can be run from the PU connector of the inverter using RS-485 communication.**

Communication specifications

Conforming standard			RS-485
Number of inverters connected			1:N (maximum 32 inverters)
Communication speed			Selectable between 19200, 9600 and 4800bps
Control protocol			Asynchronous
Communication method			Half-duplex
Communication specifications	Character system		ASCII (7 bits/8 bits) selectable
	Stop bit length		Selectable between 1 bit and 2 bits.
	Terminator		CR/LF (presence/absence selectable)
	Check system	Parity check	Selectable between presence (even/odd) and absence
		Sum check	Present
	Waiting time setting		Selectable between presence and absence

- **For the data codes of the parameters, refer to Appendix 1 "Data Code List" (page 202).**

REMARKS

For computer link operation, set 65520 (HFFF0) as the value "8888" and 65535 (HFFFF) as the value "9999".

Parameter Number	Factory Setting	Setting Range	
117	0	0 to 31	
118	192	48, 96, 192	
119	1	Data length 8	0, 1
		Data length 7	10, 11
120	2	0, 1, 2	
121	1	0 to 10, 9999	
122*	9999 (Note)	0, 0.1 to 999.8 s, 9999	
123	9999	0 to 150, 9999	
124	1	0, 1, 2	
342 (400V class only)	0	0, 1	

*** When making communication, set any value other than 0 in Pr. 122 "communication check time interval".**

Note: In the FR-E520-0.1K to 7.5K-NA and FR-E510W-0.1K to 0.75K-NA, executing parameter clear or all clear resets the setting to "0".

<Setting>

To make communication between the personal computer and inverter, the communication specifications must be set to the inverter initially. If initial setting is not made or there is a setting fault, data transfer cannot be made.

Note: After making the initial setting of the parameters, always reset the inverter. After you have changed the communication-related parameters, communication cannot be made unit the inverter is reset.

Parameter Number	Definition	Setting		Description
117	Station number	0 to 31		Station number specified for communication from the PU connector. Set the inverter station numbers when two or more inverters are connected to one personal computer.
118	Communica-tion speed	48		4800 bps
		96		9600 bps
		192		19200 bps
119	Stop bit length	8 data bits	0	Stop bit length 1 bit
			1	Stop bit length 2 bits
		7 bits	10	Stop bit length 1 bit
			11	Stop bit length 2 bits
120	Parity check presence/ absence	0		Absent
		1		Odd parity present
		2		Even parity present
121	Number of communication retries	0 to 10		Set the permissible number of retries at occurrence of a data receive error. If the number of consecutive errors exceeds the permissible value, the inverter will come to an alarm stop.
		9999 (65535)		If a communication error occurs, the inverter will not come to an alarm stop. At this time, the inverter can be coasted to a stop by MRS or RESET input. During a communication error (H0 to H5), the minor fault signal (LF) is switched on. Allocate the used terminal with any of Pr. 190 to Pr. 192 (multi-function outputs).
122	Communica-tion check time interval	0		No communication
		0.1 to 999.8		Set the communication check time [seconds] interval. If a no-communication state persists for longer than the permissible time, the inverter will come to an alarm stop.
		9999		Communication check suspension
123	Waiting time setting	0 to 150		Set the waiting time between data transmission to the inverter and response.
		9999		Set with communication data.
124	CR·LF instruction presence/ absence	0		Without CR/LF
		1		With CR, without LF
		2		With CR/LF
342* (400V class only)	E^2PROM write selection	0		When parameter write is performed from the computer, parameters are written to E^2PROM.
		1		When parameter write is performed from the computer, parameters are written to RAM.

* When you have set write to RAM, powering off the inverter clears the parameter values that have been changed. Therefore the parameter values available when power is switched on again are those stored previously in E^2PROM.
When the parameter values will be changed frequently, set "1" in Pr. 342 to choose write to RAM.

<Computer programming>

(1) Communication protocol

Data communication between the computer and inverter is performed using the following procedure:

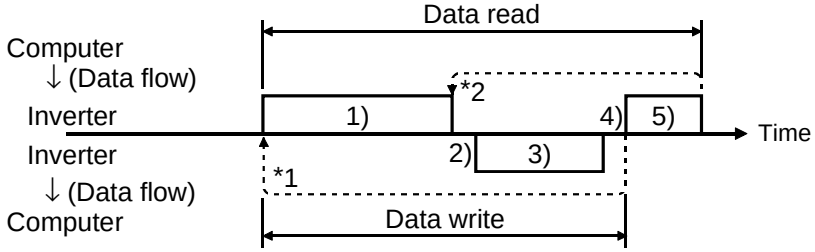

*1. If a data error is detected and a retry must be made, execute retry operation with the user program. The inverter comes to an alarm stop if the number of consecutive retries exceeds the parameter setting.

*2. On receipt of a data error occurrence, the inverter returns "reply data 3" to the computer again. The inverter comes to an alarm stop if the number of consecutive data errors reaches or exceeds the parameter setting.

(2) Communication operation presence/absence and data format types

Communication operation presence/absence and data format types are as follows:

No.	Operation		Run Command	Running Frequency	Parameter Write	Inverter Reset	Monitor-ing	Parame-ter Read
1)	Communication request is sent to the inverter in accordance with the user program in the computer.		A'	A (A") Note1	A (A") Note2	A	B	B
2)	Inverter data processing time		Present	Present	Present	Absent	Present	Present
3)	Reply data from the inverter (Data 1) is checked for error.	No error* (Request accepted)	C	C	C	Absent	E, E' (E") Note1	E (E") Note2
		With error (request rejected)	D	D	D	Absent	F	F
4)	Computer processing delay time		Absent	Absent	Absent	Absent	Absent	Absent
5)	Answer from computer in response to reply data 3. (Data 3 is checked for error)	No error* No inverter processing	Absent	Absent	Absent	Absent	G	G
		With error. Inverter outputs 3) again	Absent	Absent	Absent	Absent	H	H

* In the communication request data from the computer to the inverter, 10ms or more is also required after "no data error (ACK)". (Refer to page 126.)

Note:1 Setting any of "0.01 to 9998" in Pr. 37 "speed display" and "1" in data code "HFF" changes the data format to A" or E" (400V class). Regardless of the data code "HFF" setting, the data format for 200V or 100V class is always A" or E". The output frequency is the value of the speed display and its unit is 0.001r/min. If the data code FF is not 1, the unit is 1r/min and the 4-digit data format can be used.

2 The read/write data format of Pr. 37 "speed display" is always E"/A".

(3) Data format

Data used is hexadecimal.
Data is automatically transferred in ASCII between the computer and inverter.

1) Data format types

(1) Communication request data from computer to inverter

[Data write]

Format A

*3 ENQ	Inverter station number		Instruction code		Waiting time	Data				Sum check		*4
1	2	3	4	5	6	7	8	9	10	11	12	13←Number of characters

Format A'

*3 ENQ	Inverter station number		Instruction code		Waiting time *5	Data		Sum check		*4
1	2	3	4	5	6	7	8	9	10	11←Number of characters

Format A"

*3 ENQ	Inverter station number		Instruction code		Waiting time	Data						Sum check		*4
1	2	3	4	5	6	7	8	9	10	11	12	13	14	15←Number of characters

[Data read]

Format B

*3 ENQ	Inverter station number		Instruction code		Waiting time *5	Sum check		*4
1	2	3	4	5	6	7	8	9←Number of characters

Note: 1. The inverter station numbers may be set between H00 and H1F (stations 0 and 31) in hexadecimal.
2. *3 indicates the control code.
3. *4 indicates the CR or LF code.
When data is transmitted from the computer to the inverter, codes CR (carriage return) and LF (line feed) are automatically set at the end of a data group on some computers. In this case, setting must also be made on the inverter according to the computer.
Also, the presence and absence of the CR and LF codes can be selected using Pr. 124.
4. At *5, when Pr. 123 "waiting time setting" ≠ 9999, create the communication request data without "waiting time" in the data format.
(The number of characters is decremented by 1.)

2) Reply data from inverter to computer during data write

[No data error detected]

Format C

*3 ACK	Inverter station number		*4
1	2	3	4←Number of characters

[Data error detected]

Format D

*3 NAK	Inverter station number		Error code	*4
1	2	3	4	5←Number of characters

4

3) Reply data from inverter to computer during data read

[No data error detected]

Format E

*3 STX	Inverter station number	Read data					*3 ETX	Sum check		*4
1	2	3	4	5	6	7	8	9	10	11

Format E'

*3 STX	Inverter station number	Read data			*3 ETX	Sum check		*4
1	2	3	4	5	6	7	8	9

Format E"

*3 STX	Inverter station number	Read data					*3 ETX	Sum check		*4
1	2	3	4	5	6	7	8	9	10	11	12	13

[Data error detected]

Format F

*3 NAK	Inverter station number	Error code	*4
1	2	3	4	5

4) Send data from computer to inverter during data read

[No data error detected]

Format G

*3 ACK	Inverter station number	*4
1	2	3	4←Number of characters

[Data error detected]

Format H

*3 NAK	Inverter station number	*4
1	2	3	4←Number of characters

(4) Data definitions

1) Control codes

Signal	ASCII Code	Description
STX	H02	Start of Text (Start of data)
ETX	H03	End of Text (End of data)
ENQ	H05	Enquiry (Communication request)
ACK	H06	Acknowledge (No data error detected)
LF	H0A	Line Feed
CR	H0D	Carriage Return
NAK	H15	Negative Acknowledge (Data error detected)

2) Inverter station number

Specify the station number of the inverter which communicates with the computer.

3) Instruction code

Specify the processing request, e.g. operation, monitoring, given by the computer to the inverter. Hence, the inverter can be run and monitored in various ways by specifying the instruction code as appropriate. (Refer to page 202.)

4) Data

Indicates the data such as frequency and parameters transferred to and from the inverter. The definitions and ranges of set data are determined in accordance with the instruction codes. (Refer to page 202.)

5) Waiting time

Specify the waiting time between the receipt of data at the inverter from the computer and the transmission of reply data. Set the waiting time in accordance with the response time of the computer between 0 and 150ms in 10ms increments (e.g. 1 = 10ms, 2 = 20ms).

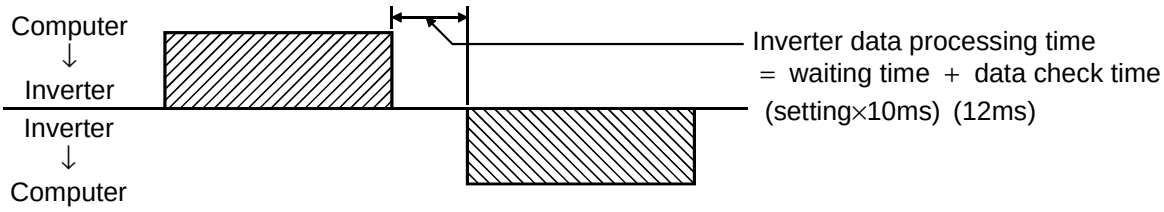

Note: If the Pr. 123 "waiting time setting" value is not 9999, create the communication request data with no "waiting time" in the data format. (The number of characters is decremented by 1.)

6) Response time

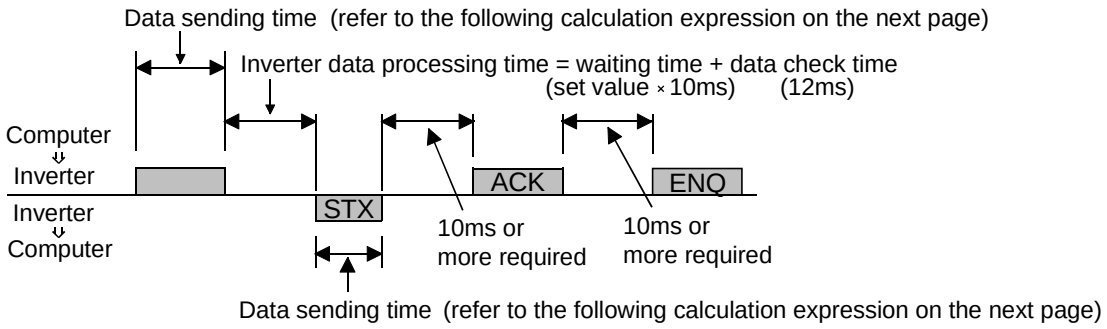

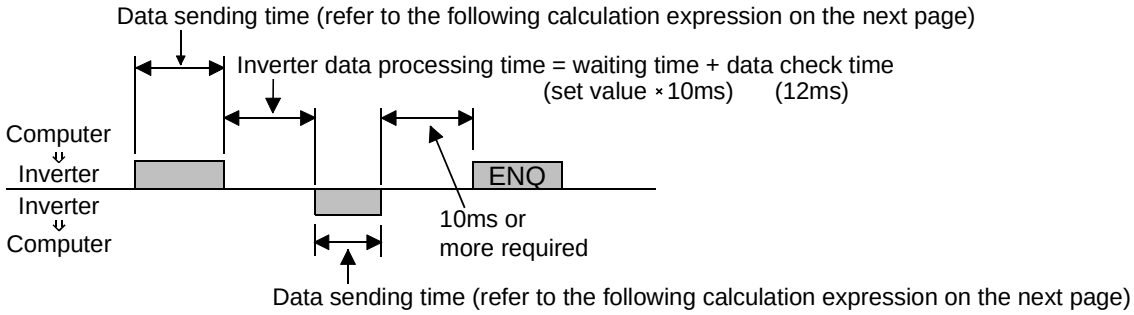

[Data sending time calculation expression]

$$\frac{1}{\text{Communication speed (bps)}} \times \text{Number of data characters (Refer to page 124)} \times \text{Communication specification (Total number of bits) (See below)} = \text{Data sending time (s)}$$

● Communication specification

Name		Number of Bits
Stop bit length		1 bit 2 bits
Data length		7 bits 8 bits
Parity check	Yes	1 bit
	No	0 bits

In addition to the bits in the above table, 1 bit is required for the start bit.
Minimum total number of bits ... 9 bits
Maximum total number of bits ... 12 bits

7) Sum check code

The sum check code is 2-digit ASCII (hexadecimal) representing the lower 1 byte (8 bits) of the sum (binary) derived from the checked ASCII data.

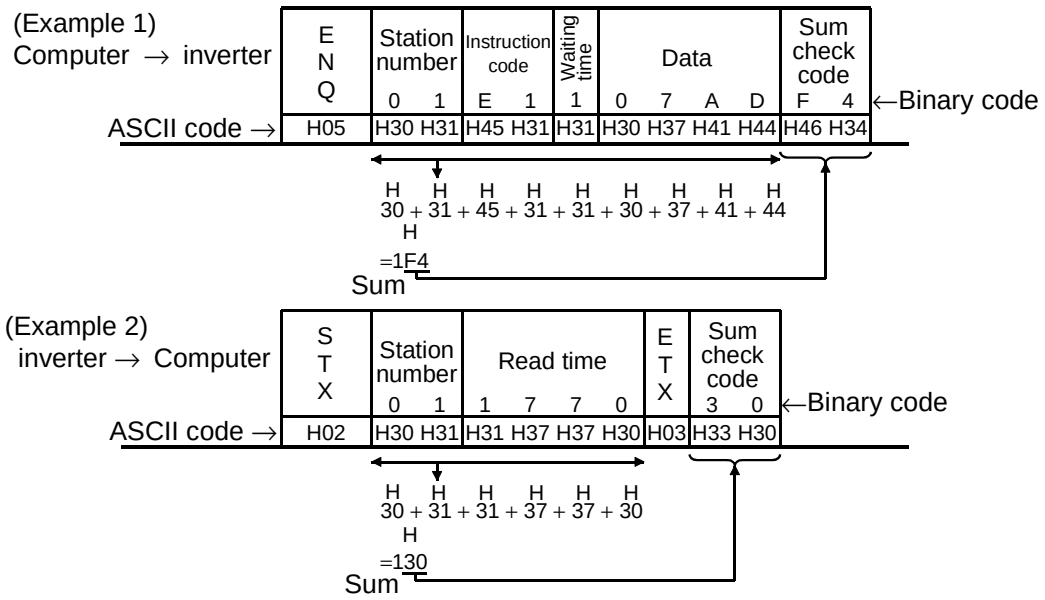

8) Error code

If any error is found in the data received by the inverter, its definition is sent back to the computer together with the NAK code. (Refer to page 132.)

Note: 1. When the data from the computer has an error, the inverter will not accept that data.

2. Any data communication, e.g. run command, monitoring, is started when the computer gives a communication request. Without the computer's command, the inverter does not return any data. For monitoring, therefore, design the program to cause the computer to provide a data read request as required.

3. When accessing the parameter settings, data for link parameter expansion setting differs between the parameters as indicated below:

		Instruction Code	Data
Link parameter expansion setting	Read	H7F	H00: Pr. 0 to Pr. 96 values are accessible. H01: Pr. 100 to Pr. 158 and Pr. 900 to Pr. 905 values are accessible. H02: Pr. 160 to Pr. 196 and Pr. 232 to Pr. 251 values are accessible. H03: Pr. 338 to Pr. 342 values are accessible. H09: Pr. 990, Pr. 991 values are accessible.
	Write	HFF	

⚠ CAUTION

⚠ **When the inverter's permissible communication time interval is not set, interlocks are provided to disable operation to prevent hazardous conditions. Always set the communication check time interval before starting operation.**

⚠ **Data communication is not started automatically but is made only once when the computer provides a communication request. If communication is disabled during operation due to signal cable breakage etc, the inverter cannot be stopped. When the communication check time interval has elapsed, the inverter will come to an alarm stop (E.PUE).**
The inverter can be coasted to a stop by switching on its RES signal or by switching power off.

⚠ **If communication is broken due to signal cable breakage, computer fault etc, the inverter does not detect such a fault. This should be fully noted.**

<Setting items and set data>

After completion of parameter settings, set the instruction codes and data then start communication from the computer to allow various types of operation control and monitoring.

No.	Item		Instruction Code	Description	Number of Data Digits (Data code FF=1)
1	Operation mode	Read	H7B	H0001: External operation H0002: Communication operation	4 digits
		Write	HFB	H0001: External operation H0002: Communication operation	
2	Monitoring: Output frequency [speed]		H6F	H0000 to HFFFF: Output frequency (hexadecimal) in 0.01Hz increments [Speed (hexadecimal) in r/min increments if Pr. 37 = 1 to 9998]	4 digits (6 digits)
	Monitoring: Output current		H70	H0000 to HFFFF: Output current (hexadecimal) in 0.01A increments	4 digits
	Monitoring: Output voltage		H71	H0000 to HFFFF: Output voltage (hexadecimal) in 0.1V increments	4 digits
	Monitoring: Alarm definition		H74 to H77	H0000 to HFFFF: Two most recent alarm definitions Alarm definition display example (instruction code H74) b15 b8 b7 b0 0 0 1 1 0 0 0 0 1 0 1 0 0 0 0 0 Previous alarm (H30) / Most recent alarm (HA0) Alarm data	4 digits
3	Run command		HFA	b7 b0 0 0 0 0 0 0 1 0 [For example 1] [Example 1] H02 ... Forward rotation [Example 2] H00 ... Stop b0 : ——— b1 : Forward rotation (STF) b2 : Reverse rotation (STR) b3 : ——— b4 : ——— b5 : ——— b6 : ——— b7 : ———	2 digits

Alarm data

Data	Description	Data	Description
H00	No alarm	H70	BE
H10	OC1	H80	GF
H11	OC2	H81	LF
H12	OC3	H90	OHT
H20	OV1	HA0	OPT
H21	OV2	HB0	PE
H22	OV3	HB1	PUE
H30	THT	HB2	RET
H31	THM	HF6	E. 6
H40	FIN	HF7	E. 7
H60	OLT		

<table>
<tr><th>No.</th><th>Item</th><th>Instruction Code</th><th>Description</th><th>Number of Data Digits (Data code FF=1)</th></tr>
<tr><td>4</td><td>Inverter status monitor</td><td>H7A</td><td>b7 b0
0 0 0 0 0 0 1 0
(For example 1)
[Example 1] H02 ... During forward rotation
[Example 2] H80 ... Stop due to alarm
b0: Inverter running (RUN)
b1: Forward rotation
b2: Reverse rotation
b3: Up to frequency (SU)
b4: Overload (OL)
b5: ————
b6: Frequency detection (FU)
b7: Alarm occurrence</td><td>2 digits</td></tr>
<tr><td rowspan="4">5</td><td>Set frequency read (E^2PROM)</td><td>H6E</td><td rowspan="2">Reads the set frequency (RAM or E^2PROM).
H0000 to H9C40: 0.01Hz increments (hexadecimal)</td><td rowspan="2">4 digits
(6 digits)</td></tr>
<tr><td>Set frequency read (RAM)</td><td>H6D</td></tr>
<tr><td>Set frequency write (E^2PROM)</td><td>HEE</td><td rowspan="2">H0000 to H9C40: 0.01Hz increments (hexadecimal)
(0 to 400.00Hz)
To change the set frequency consecutively, write data to the inverter RAM.
(Instruction code: HED)</td><td rowspan="2">4 digits
(6 digits)</td></tr>
<tr><td>Set frequency write (RAM)</td><td>HED</td></tr>
<tr><td>6</td><td>Inverter reset</td><td>HFD</td><td>H9696: Resets the inverter.
As the inverter is reset on start of communication by the computer, the inverter cannot send reply data back to the computer.</td><td>4 digits</td></tr>
<tr><td>7</td><td>Alarm definition batch clear</td><td>HF4</td><td>H9696: Batch clear of alarm history</td><td>4 digits</td></tr>
<tr><td>8</td><td>All parameter clear</td><td>HFC</td><td>All parameters return to the factory settings.
Any of four different all clear operations is performed according to the data.
<table>
<tr><th>Pr. / Data</th><th>Communication Pr.</th><th>Calibration</th><th>Other Pr.*</th><th>HEC HFF</th></tr>
<tr><td>H9696</td><td>○</td><td>×</td><td>○</td><td>○</td></tr>
<tr><td>H9966</td><td>○</td><td>○</td><td>○</td><td>○</td></tr>
<tr><td>H5A5A</td><td>×</td><td>×</td><td>○</td><td>○</td></tr>
<tr><td>H55AA</td><td>×</td><td>○</td><td>○</td><td>○</td></tr>
</table>
When all parameter clear is executed for H9696 or H9966, communication-related parameter settings also return to the factory settings. When resuming operation, set the parameters again.
*Pr. 75 is not cleared.</td><td>4 digits</td></tr>
<tr><td>9</td><td>Parameter write</td><td>H80 to HFD</td><td rowspan="2">Refer to the "Data Code List" (page 202) and write and/or read the values as required.</td><td rowspan="2">4 digits</td></tr>
<tr><td>10</td><td>Parameter read</td><td>H00 to H7B</td></tr>
</table>

No.	Item		Instruction Code	Description	Number of Data Digits (Data code FF=1)
11	Link parameter expansion setting	Read	H7F	H00 to H6C and H80 to HEC parameter values are changed. H00: Pr. 0 to Pr. 96 values are accessible. H01: Pr. 117 to Pr. 158 and Pr. 900 to Pr. 905 values are accessible. H02: Pr. 160 to Pr. 192 and Pr. 232 to Pr. 251 values are accessible. H03: Pr. 338 to Pr. 340 values are accessible. (only 400V class fitted with FR-E5NC), Pr. 342 value is accessible (400V class only) H09: Pr. 990, Pr. 991 value is accessible.	2 digits
		Write	HFF		
12	Second parameter changing (Code HFF=1)	Read	H6C	When setting the bias/gain (data codes H5E to H6A, HDE to HED) parameters H00: Offset/gain H01: Analog H02: Analog value of terminal	2 digits
		Write	HEC		

REMARKS

For the instruction codes HFF, HEC, their set values are held once they are written, but changed to 0 when the inverter is reset or all clear is performed.

<Error Code List>

The corresponding error code in the following list is displayed if an error is detected in any communication request data from the computer:

Error Code	Item	Definition	Inverter Operation
H0	Computer NAK error	The number of errors consecutively detected in communication request data from the computer is greater than allowed number of retries.	Brought to an alarm stop (E.PUE) if error occurs continuously more than the allowable number of retries.
H1	Parity error	The parity check result does not match the specified parity.	
H2	Sum check error	The sum check code in the computer does not match that of the data received by the inverter.	
H3	Protocol error	Data received by the inverter is in wrong protocol, data receive is not completed within given time, or CR and LF are not as set in the parameter.	
H4	Framing error	The stop bit length is not as specified by initialization.	
H5	Overrun error	New data has been sent by the computer before the inverter completes receiving the preceding data.	
H6	———	———	———
H7	Character error	The character received is invalid (other than 0 to 9, A to F, control code).	Does not accept received data but is not brought to alarm stop.
H8	———	———	———
H9	———	———	———
HA	Mode error	Parameter write was attempted in other than the computer link operation mode or during inverter operation.	Does not accept received data but is not brought to alarm stop.
HB	Instruction code error	The specified command does not exist.	
HC	Data range error	Invalid data has been specified for parameter write, frequency setting, etc.	
HD	———	———	———
HE	———	———	———
HF	———	———	———

(5) Communication specifications for RS-485 communication

Operation Location	Item	Operation Mode	
		Communication Operation from PU Connector	External Operation
Computer user program via PU connector	Run command (start)	Enable	Disable
	Running frequency setting	Enable	Enable (Combined operation mode)
	Monitoring	Enable	Enable
	Parameter write	Enable (*2)	Disable (*2)
	Parameter read	Enable	Enable
	Inverter reset	Enable	Enable
	Stop command (*1)	Enable	Enable
Control circuit terminal	Inverter reset	Enable	Enable
	Run command	Disable	Enable
	Running frequency setting	Disable	Enable

*1 As set in Pr. 75.

*2 As set in Pr. 77.

Note: At occurrence of RS-485 communication fault, the inverter cannot be reset from the computer.

(6) Operation at alarm occurrence

Fault Location	Description		Operation Mode	
			Communication Operation (PU connector)	External Operation
Inverter fault	Inverter operation		Stop	Stop
	Communication	PU connector	Continued	Continued
Communication error (Communication from PU connector)	Inverter operation		Stop/continued (*3)	Continued
	Communication	PU connector	Stop	Stop

*3: Can be selected using the corresponding parameter (factory-set to stop).

(7) Communication error

Fault Location	Error Message	Remarks
Communication error (Communication from PU connector)	Not displayed	Error code is E.PUE

4.2.37 PID control (Pr. 128 to Pr. 134)

Related parameters

Pr. 73 "0-5V/0-10V selection"
Pr. 79 "operation mode selection"
Pr. 180 to Pr. 183 (input terminal function selection)
Pr. 191 to Pr. 192 (output terminal function selection)
Pr. 902 to Pr. 905 (frequency setting voltage (current) biases and gains)

Pr. 128 "PID action selection"

Pr. 129 "PID proportional band"

Pr. 130 "PID integral time"

Pr. 131 "upper limit"

Pr. 132 "lower limit"

Pr. 133 "PID action set point for PU operation"

Pr. 134 "PID differential time"

The inverter can be used to exercise process control, e.g. flow rate, air volume or pressure.

- The voltage input signal (0 to ±5V or 0 to ±10V) or Pr. 133 setting is used as a set point and the 4 to 20mA DC current input signal used as a feedback value to constitute a feedback system for PID control.

Parameter Number	Factory Setting	Setting Range	Remarks
128	0	0, 20, 21	
129	100%	0.1 to 1000%, 9999	9999: No proportional control
130	1s	0.1 to 3600s, 9999	9999: No integral control
131	9999	0 to 100%, 9999	9999: Function invalid
132	9999	0 to 100%, 9999	9999: Function invalid
133	0%	0 to 100%	
134	9999	0.01 to 10.00s, 9999	9999: No differential control

<Setting>

(1) Basic PID control configuration

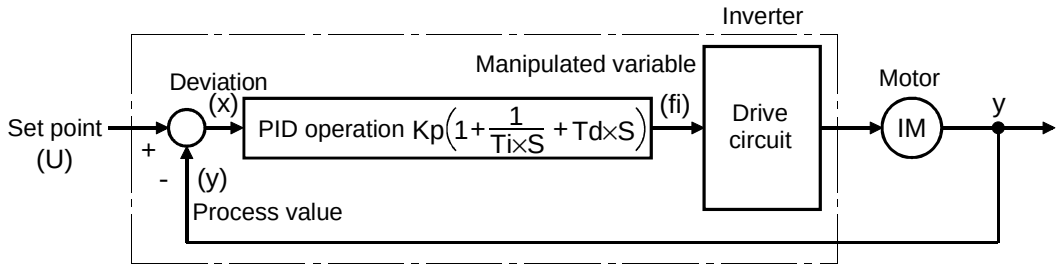

Kp : Proportional constant
Ti : Integral time
S : Operator
Td : Differential time

(2) PID action overview

1) PI action

A combination of proportional control action (P) and integral control action (I) for providing a manipulated variable in response to deviation and changes with time.

[Operation example for stepped changes of process value]

Note: PI action is the sum of P and I actions.

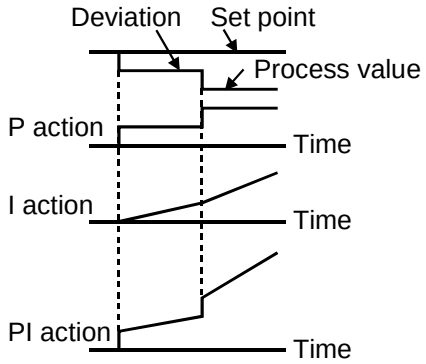

2) PD action

A combination of proportional control action (P) and differential control action (D) for providing a manipulated variable in response to deviation speed to improve the transient characteristic.

[Operation example for proportional changes of process value]

Note: PD action is the sum of P and D actions.

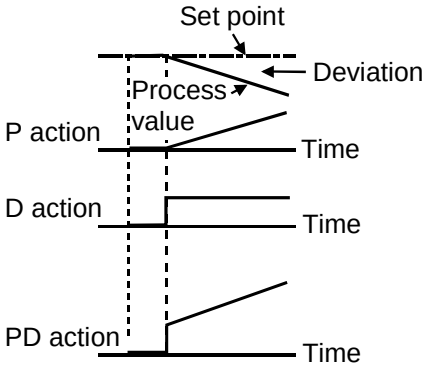

3) PID action

The PI action and PD action are combined to utilize the advantages of both actions for control.

Note: The PID action is the sum of P, I and D actions.

4) Reverse action

Increases the manipulated variable (output frequency) if deviation X (set point - process value) is positive, and decreases the manipulated variable if deviation is negative.

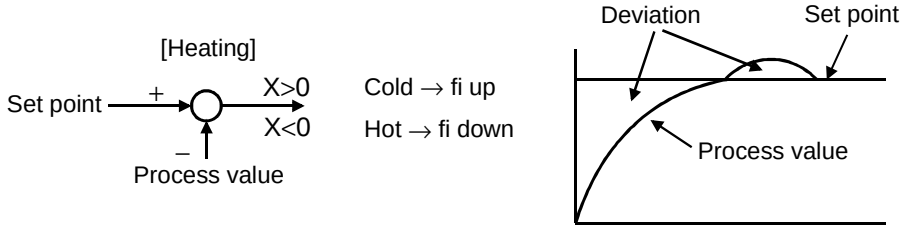

5) Forward action

Increases the manipulated variable (output frequency) if deviation X (set point - process value) is negative, and decreases the manipulated variable if deviation is positive.

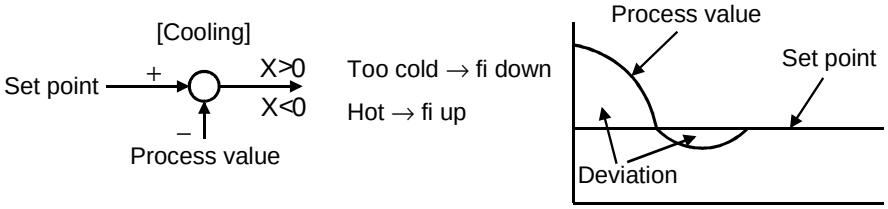

Relationships between deviation and manipulated variable (output frequency)

	Deviation	
	Positive	**Negative**
Reverse action	↗	↘
Forward action	↘	↗

(3) Wiring example

- Pr. 190 = 14
- Pr. 191 = 15
- Pr. 192 = 16

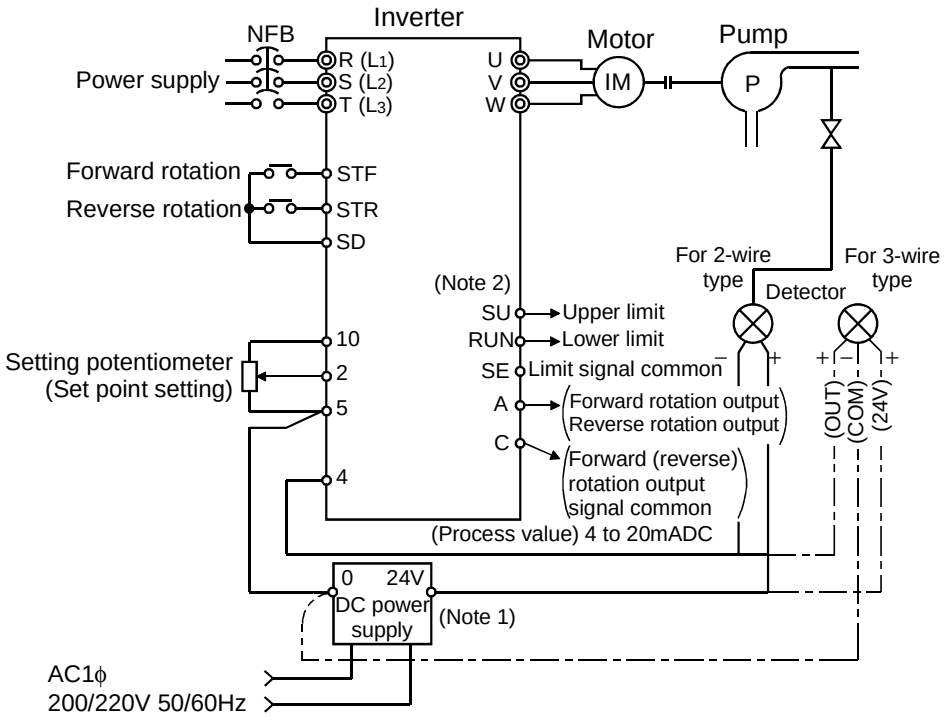

Note: 1. The power supply must be selected in accordance with the power specifications of the detector used.
2. The output signal terminals used depends on the Pr. 190 to Pr. 192 settings.

(4) I/O signals

Signal		Terminal Used	Function	Description
Input	2	2	Set point input	Enter the set point for PID control.
	4	4	Process value input	Enter the 4 to 20mADC process value signal from the detector.
Output	FUP	Depending on Pr. 190 to Pr. 192	Upper limit output	Output to indicate that the process value signal exceeded the upper limit value.
	FDN		Lower limit output	Output to indicate that the process value signal exceeded the lower limit value.
	RL		Forward (reverse) rotation direction output	"Hi" is output to indicate that the output indication of the parameter unit is forward rotation (FWD) or "Low" to indicate that it is reverse rotation (REV) or stop (STOP).

- Enter the set point across inverter terminals 2-5 or in Pr. 133 and enter the process value signal across inverter terminals 4-5.

Item	Entry	Description	
Set point	Across terminals 2-5	Set 0V as 0% and 5V as 100%.	When "0" is set in Pr. 73 (5V selected for terminal 2).
		Set 0V as 0% and 10V as 100%.	When "1" is set in Pr. 73 (10V selected for terminal 2).
Set point	Pr. 133	Set the set point (%) in Pr. 133.	
Process value	Across terminals 4-5	4mA DC is equivalent to 0% and 20mA DC to 100%.	

(5) Parameter setting

Parameter Number	Setting	Name	Description	
128	0	PID action selection	No PID action	
	20		For heating, pressure control, etc.	PID reverse action
	21		For cooling, etc.	PID forward action
129	0.1 to 1000%	PID propor-tional band	If the proportional band is narrow (parameter setting is small), the manipulated variable varies greatly with a slight change of the process value. Hence, as the proportional band narrows, the response sensitivity (gain) improves but the stability deteriorates, e.g. hunting occurs. Gain Kp = 1/proportional band	
	9999		No proportional control	
130	0.1 to 3600 s	PID integral time	Time required for the integral (I) action to provide the same manipulated variable as that for the proportional (P) action. As the integral time decreases, the set point is reached earlier but hunting occurs more easily.	
	9999		No integral control.	
131	0 to 100%	Upper limit	Set the upper limit. If the feedback value exceeds the setting, the FUP signal is output. (Process value of 4mA is equivalent to 0% and 20mA to 100%.)	
	9999		No function	
132	0 to 100%	Lower limit	Set the lower limit. (If the process value goes out of the setting range, an alarm can be output. In this case, the process value of 4mA is equivalent to 0% and 20mA to 100%.)	
	9999		No function	
133	0 to 100%	PID action set point for PU operation	Only valid for the PU command in the PU operation or PU/external combined operation mode. For external operation, the voltage across 2-5 is the set point. (Pr. 902 value is equivalent to 0% and Pr. 903 value to 100%.)	
134	0.01 to 10.00 s	PID differential time	Time required for the differential (D) action to provide the same process value as that for the proportional (P) action. As the differential time increases, greater response is made to a deviation change.	
	9999		No differential control.	

(6) Adjustment procedure

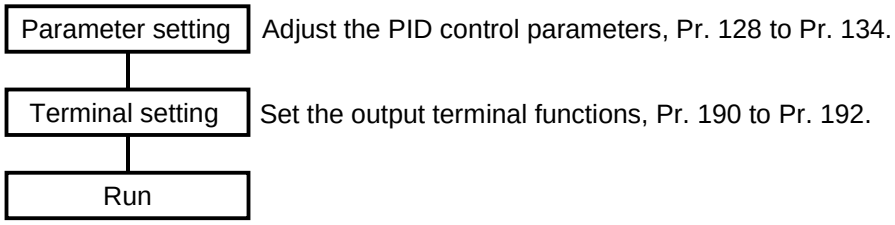

(7) Calibration example

(A detector of 4mA at 0°C (32°F) and 20mA at 50°C (122°F) is used to adjust the room temperature to 25°C (77°F) under PID control. The set point is given to across inverter terminals 2-5 (0-5V).)

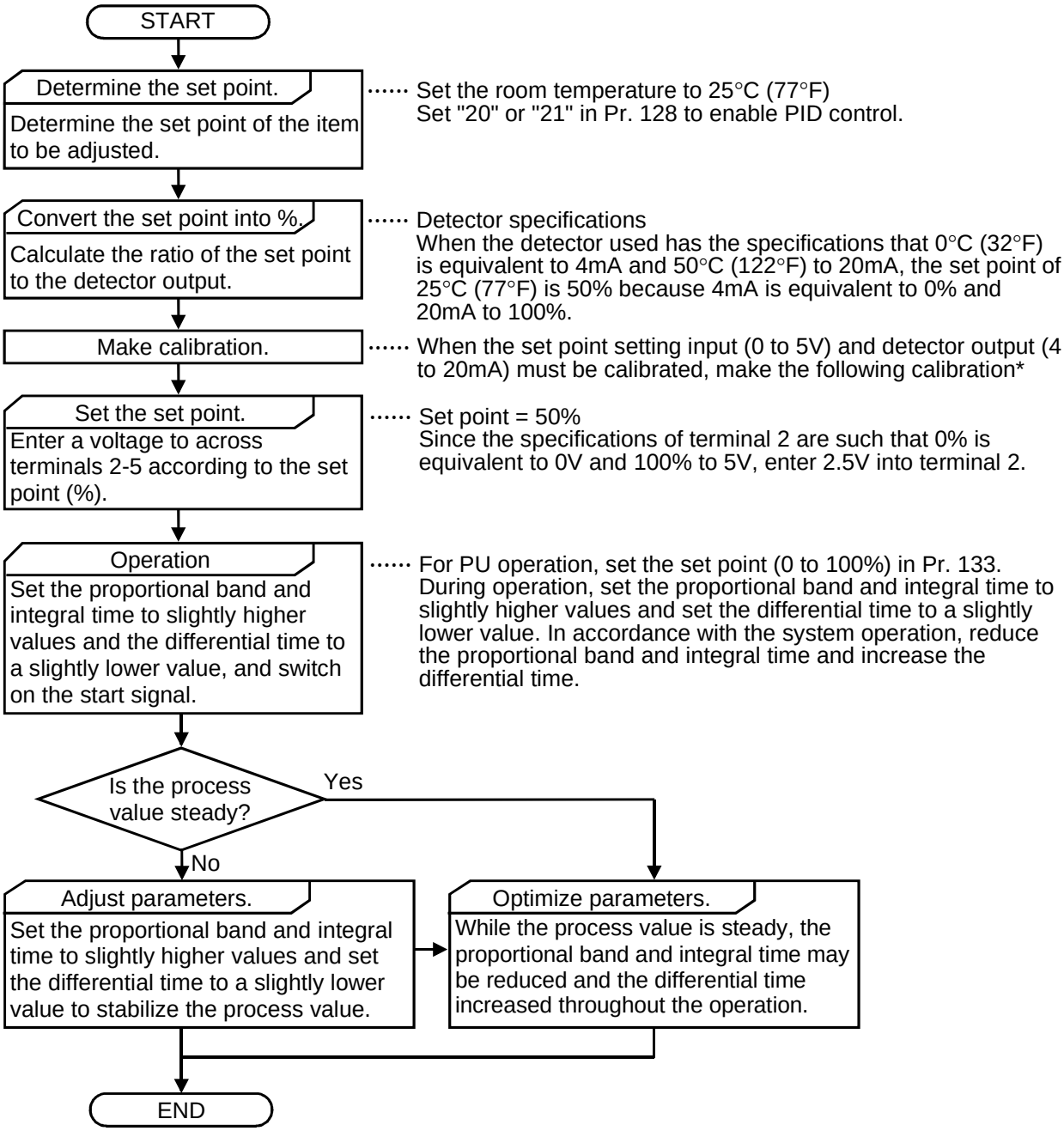

* When calibration is required, use Pr. 902 to Pr. 905 to calibrate the detector output and set point setting input in the PU mode during an inverter stop.

<Set point input calibration>

1. Apply the input voltage of 0% set point setting (e.g. 0V) to across terminals 2-5.
2. Make calibration using Pr. 902. At this time, enter the frequency which should be output by the inverter at the deviation of 0% (e.g. 0Hz).
3. Apply the voltage of 100% set point setting (e.g. 5V) to across terminals 2-5.
4. Make calibration using Pr. 903. At this time, enter the frequency which should be output by the inverter at the deviation of 100% (e.g. 60Hz).

<Detector output calibration>

1. Apply the output current of 0% detector setting (e.g. 4mA) across terminals 4-5.
2. Make calibration using Pr. 904.
3. Apply the output current of 100% detector setting (e.g. 20mA) across terminals 4-5.
4. Make calibration using Pr. 905.

Note: The frequencies set in Pr. 904 and Pr. 905 should be the same as set in Pr. 902 and Pr. 903.
The results of the above calibration are as shown below:

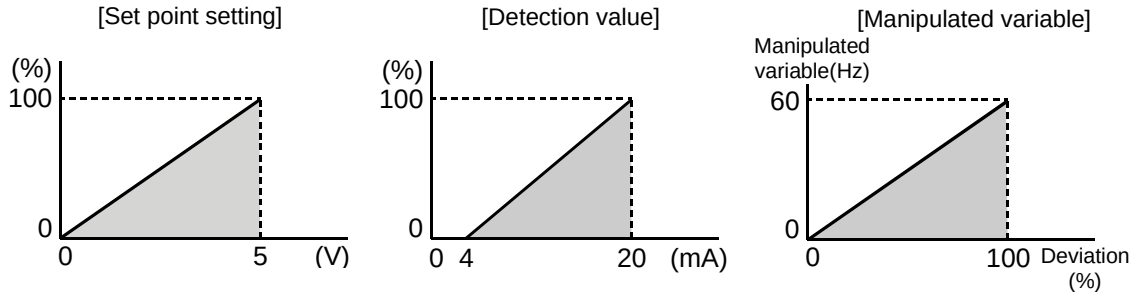

Note: 1. If the multi-speed (RH, RM, RL) signal or jog operation (jog) signal is entered, PID control is stopped and multi-speed or jog operation is started.
2. When the terminal functions are changed using Pr. 190 to Pr. 192, the other functions may be affected. Confirm the functions of the corresponding terminals before making settings.
3. When you have chosen the PID control, the minimum frequency is as set in Pr. 902 and the maximum frequency is as set in Pr. 903.
(The settings of Pr. 1 "maximum frequency" and Pr. 2 "minimum frequency" are also valid.)

4.2.38 Output current detection function (Pr. 150, Pr.151)

Pr. 150 "output current detection level"

Pr. 151 "output current detection period"

Related parameters
Pr. 190 to Pr. 192
(output terminal function selection)

- If the output current remains higher than the Pr. 150 setting during inverter operation for longer than the time set in Pr. 151, the output current detection signal (Y12) is output from the inverter's open collector output terminal.
  (Use any of Pr. 190 to Pr. 192 to assign the terminal used for Y12 signal output.)

Parameter Number	Factory Setting	Setting Range
150	150%	0 to 200.0%
151	0	0 to 10 s

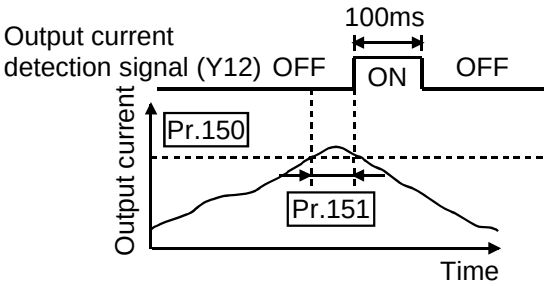

<Setting>

Refer to the following list and set the parameters:

Parameter Number	Description
150	Set the output current detection level. 100% is the rated inverter current.
151	Set the output current detection time. Set a period of time from when the output current rises to or above the Pr. 150 setting to when the output current detection signal (Y12) is output.

Note: 1. The output current detection signal is held on for about 100ms (at least) if it switches on once when the output current rises to or above the preset detection level.
2. This function is also valid during execution of offline auto tuning.
3. When the terminal functions are changed using Pr. 190 to Pr. 192, the other functions may be affected. Confirm the functions of the corresponding terminals before making settings.

4.2.39 Zero current detection (Pr. 152, Pr.153)

Pr. 152 "zero current detection level"

Pr. 153 "zero current detection period"

Related parameters
Pr. 190 to Pr. 192 (output terminal function selection)

When the inverter's output current falls to "0", torque will not be generated. This may cause a gravity drop when the inverter is used in vertical lift application.
To prevent this, the output current "zero" signal can be output from the inverter to close the mechanical brake when the output current has fallen to "zero".

- If the output current remains lower than the Pr. 152 setting during inverter operation for longer than the time set in Pr. 153, the zero current detection (Y13) signal is output from the inverter's open collector output terminal.
  (Use any of Pr. 190 to Pr. 192 to assign the terminal used for Y13 signal output.)

Parameter Number	Factory Setting	Setting Range
152	5.0%	0 to 200.0%
153	0.5 s	0.05 to 1 s

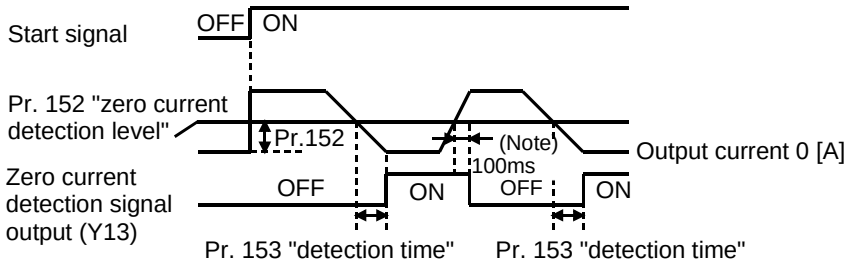

<Setting>

Refer to the following list and set the parameters:

Parameter Number	Description
152	Set the zero current detection level. Set this parameter to define the percentage of the rated current at which the zero current will be detected.
153	Set the zero current detection time. Set a period of time from when the output current falls to or below the Pr. 152 setting to when the zero current detection signal (Y13) is output.

Note: 1. If the current falls below the preset detection level but the timing condition is not satisfied, the zero current detection signal is held on for about 100ms.
2. This function is also valid during execution of offline auto tuning.
3. When the terminal functions are changed using Pr. 190 to Pr. 192, the other functions may be affected. Confirm the functions of the corresponding terminals before making settings.

⚠ CAUTION

- **The zero current detection level setting should not be too high, and the zero current detection time setting should not be too long. Otherwise, the detection signal may not be output when torque is not generated at a low output current.**
- **To prevent the machine and equipment from resulting in hazardous conditions by use of the zero current detection signal, install a safety backup such as an emergency brake.**

4.2.40 Stall prevention function and current limit function (Pr. 156)

Pr. 156 " stall prevention operation selection"

Related parameters

Pr. 22 "stall prevention operation level"
Pr. 23 "stall prevention operation level compensation factor at double speed"

You can make settings to disable stall prevention caused by overcurrent and to disable the inverter from an overcurrent trip if an excessive current occurs due to sudden load variation or turning the inverter's output side ON-OFF (to disable the fast-response current limit which limits the current).

Parameter Number	Factory Setting	Setting Range
156	0	0 to 31, 100

<Setting>

Refer to the following tables and set the parameter as required.

Pr. 156 Setting	Fast-Response Current Limit ○: Activated ●: Not activated	Stall Prevention Operation Selection ○: Activated ●: Not activated			OL Signal Output ○: Operation continued ●: Operation not continued (Note 1)
		Acceleration	Constant speed	Deceleration	
0	○	○	○	○	○
1	●	○	○	○	○
2	○	●	○	○	○
3	●	●	○	○	○
4	○	○	●	○	○
5	●	○	●	○	○
6	○	●	●	○	○
7	●	●	●	○	○
8	○	○	○	●	○
9	●	○	○	●	○
10	○	●	○	●	○
11	●	●	○	●	○
12	○	○	●	●	○
13	●	○	●	●	○
14	○	●	●	●	○
15	●	●	●	●	○

Pr. 156 Setting		Fast-Response Current Limit ○: Activated ●: Not activated	Stall Prevention Operation Selection ○: Activated ●: Not activated			OL Signal Output ○: Operation continued ●: Operation not continued (Note 1)
			Acceleration	Constant speed	Deceleration	
16		○	○	○	○	●
17		●	○	○	○	●
18		○	●	○	○	●
19		●	●	○	○	●
20		○	○	●	○	●
21		●	○	●	○	●
22		○	●	●	○	●
23		●	●	●	○	●
24		○	○	○	●	●
25		●	○	○	●	●
26		○	●	○	●	●
27		●	●	○	●	●
28		○	○	●	●	●
29		●	○	●	●	●
30		○	●	●	●	●
31		●	●	●	●	●
100	Driving	○	○	○	○	○
	Regenerative	●	●	●	●	○

Note 1: When "Operation not continued for OL signal output" is selected, the "E.OLT" alarm code (stopped by stall prevention) is displayed and operation stopped.
(Alarm stop display "E.OLT")

2: If the load is heavy, the lift is predetermined, or the acceleration/deceleration time is short, the stall prevention may be activated and the motor not stopped in the preset acceleration/deceleration time. Therefore, set optimum values to the Pr. 156 and stall prevention operation level.

⚠ CAUTION

⚠ **Always perform test operation.**
Stall prevention operation performed during acceleration may increase the acceleration time.
Stall prevention operation performed during constant speed may cause sudden speed changes.
Stall prevention operation performed during deceleration may increase the deceleration time, increasing the deceleration distance.

Pr. 158 ➔ Refer to Pr. 52.

4.2.41 User group selection (Pr. 160, Pr. 173 to Pr. 176)

Pr. 160 "user group read selection"

Pr. 173 "user group 1 registration"

Pr. 174 "user group 1 deletion"

Pr. 175 "user group 2 registration"

Pr. 176 "user group 2 deletion"

Among all parameters, a total of 32 parameters can be registered to two different user groups. The registered parameters may only be accessed.
The other parameters cannot be read.

Parameter Number	Factory Setting	Setting Range	Remarks
160	0	0, 1, 10, 11	
173	0	0 to 999	
174	0	0 to 999, 9999	9999: Batch deletion
175	0	0 to 999	
176	0	0 to 999, 9999	9999: Batch deletion

<Setting example show the use of the control panel (FR-PA02-02)>

(1) Registration of parameter to user group (when registering Pr. 3 to user group 1)

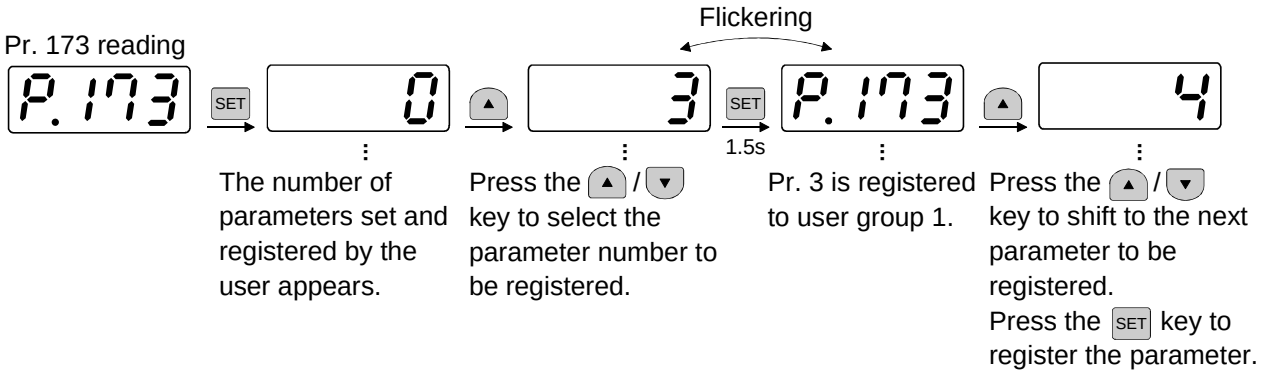

(2) Deletion of parameter from the user group (when Pr. 5 is deleted from user group 1)

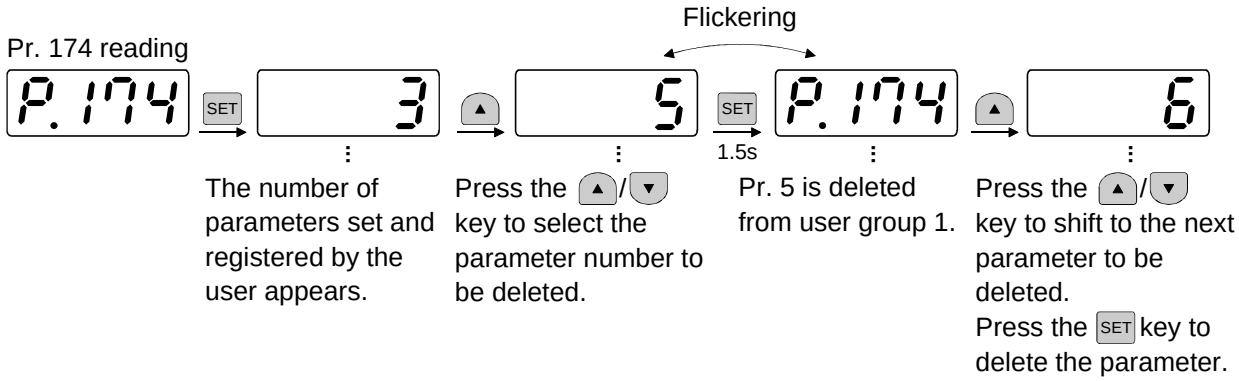

(3) Set the required value in Pr. 160 to make the user group or groups valid or invalid.

Pr. 160 Setting	Description
0	Previous parameters read
1	User group 1's parameters read
10	User group 2's parameters read
11	User group 1 and 2 parameters read

Note: 1. The Pr. 77, Pr. 160 and Pr. 991 values may always be read independently of the user group setting.
2. The Pr. 173 or Pr. 174 value read indicates the number of parameters registered to group 1, and the Pr. 175 or Pr. 176 value read indicates the number of parameters registered to group 2.
3. If "0" is set in the second digit of two-digit Pr. 160, it is not displayed. However, "0" is displayed when it is set in the first digit only.
4. When "9999" is set in Pr. 174 or Pr. 176, the parameters registered to the corresponding user group are batch-deleted.

4.2.42 Actual operation hour meter clear (Pr. 171)

Pr. 171 "actual operation hour meter clear"

Related parameter

Pr. 52 "Control panel/PU main display data selection"

You can clear the monitor (actual operation hour) value which is selected when Pr. 52 is "23".

Parameter Number	Factory Setting	Setting Range
171	0	0

<Setting>

Write "0" in the parameter to clear the actual operation hour.

Pr. 173 to Pr. 176 ➔ Refer to Pr. 160.

4.2.43 Input terminal function selection (Pr. 180 to Pr. 183)

Pr. 180 "RL terminal function selection"

Pr. 181 "RM terminal function selection"

Pr. 182 "RH terminal function selection"

Pr. 183 "MRS terminal function selection"

Use these parameters to select/change the input terminal functions.

Parameter Number	Terminal Symbol	Factory Setting	Factory-Set Terminal Function	Setting Range
180	RL	0	Low-speed operation command (RL)	0 to 8, 16, 18
181	RM	1	Middle-speed operation command (RM)	0 to 8, 16, 18
182	RH	2	High-speed operation command (RH)	0 to 8, 16, 18
183	MRS	6	Output shut-off (MRS)	0 to 8, 16, 18

<Setting>

Refer to the following list and set the parameters.

Setting	Signal Name	Function		Related Parameters
0	RL	Pr. 59 = 0	Low-speed operation command	Pr. 4 to Pr. 6 Pr. 24 to Pr. 27 Pr. 232 to Pr. 239
		Pr. 59 = 1, 2 *	Remote setting (setting clear)	Pr. 59
1	RM	Pr. 59 = 0	Middle-speed operation command	Pr. 4 to Pr. 6, Pr. 24 to Pr. 27, Pr. 232 to Pr. 239
		Pr. 59 = 1, 2 *	Remote setting (deceleration)	Pr. 59
2	RH	Pr. 59 = 0	High-speed operation command	Pr. 4 to Pr. 6, Pr. 24 to Pr. 27, Pr. 232 to Pr. 239
		Pr. 59 = 1, 2 *	Remote setting (acceleration)	Pr. 59
3	RT	Second function selection		Pr. 44 to Pr. 48
4	AU	Current input selection		
5	STOP	Start self-holding terminal		
6	MRS	Output shut-off terminal		
7	OH	External thermal relay input ** The external thermal relay provided for overheat protection or the embedded temperature relay within the motor is activated to stop the inverter.		Refer to page 166.
8	REX	15-speed selection (combination with three speeds of RL, RM, RH)		Pr. 4 to Pr. 6, Pr. 24 to Pr. 27, Pr. 232 to Pr. 239
16	X16	PU operation-external operation switch-over		Pr. 79
18	X18	General-purpose magnetic flux vector-V/F switch-over (OFF: general-purpose magnetic flux vector control, ON: V/F control) (Note 3)		Pr. 80

* : When Pr. 59 = "1" or "2", the functions of the RL, RM and RH signals change as listed above.

**: Activated when the relay contact "opens".

Note:
1. One function can be assigned to two or more terminals. In this case, the terminal inputs are OR' ed.
2. The speed command priorities are higher in order of multi-speed setting (RH, RM, RL, REX) and AU.
3. When V/F control is selected using the V/F-general-purpose magnetic flux switch-over function, the secondry functions are also selected.
   During operation, you cannot switch between V/F and general-purpose magnetic flux. Should you switch between V/F and general-purpose magnetic flux, only the second functions are selected.
4. Use common terminals to assign multi-speeds (7 speeds) and remote setting. They cannot be set individually.
   (Common terminals are used since these functions are designed for multiple speed setting and need not be set at the same time.)
5. Functions are invalid if values other than the above are set to Pr. 180 to Pr. 183 (input terminal function selection).

4.2.44 Output terminal function selection (Pr. 190 to Pr. 192)

Pr. 190 "RUN terminal function selection"

Pr. 191 "FU terminal function selection"

Pr. 192 "A, B, C terminal function selection"

You can change the functions of the open collector and contact output terminals.

Parameter Number	Terminal Symbol	Factory Setting	Factory-Set Terminal Function	Setting Range
190	RUN	0	Inverter running	0 to 99
191	FU	4	Output frequency detection	0 to 99
192	ABC	99	Alarm output	0 to 99

<Setting>

Refer to the following table and set the parameters:

Setting	Signal Name	Function	Operation	Related Parameters
0	RUN	Inverter running	Output during operation when the inverter output frequency rises to or above the starting frequency.	——
1	SU	Up to frequency	Refer to Pr. 41 "up-to-frequency sensitivity". (Note 1)	Pr. 41
3	OL	Overload alarm	Output while stall prevention function is activated.	Pr. 22, Pr. 23, Pr. 66
4	FU	Output frequency detection	Refer to Pr. 42, Pr. 43 (output frequency detection).	Pr. 42, Pr. 43
11	RY	Inverter operation ready	Output when the inverter is ready to be started by switching the start signal on.	——
12	Y12	Output current detection	Refer to Pr. 150 and Pr. 151 (output current detection).	Pr. 150, Pr. 151
13	Y13	Zero current detection	Refer to Pr. 152 and Pr. 153 (zero current detection).	Pr. 152, Pr. 153
14	FDN	PID lower limit	Refer to Pr. 128 to Pr. 134 (PID control).	Pr. 128 to Pr. 134
15	FUP	PID upper limit		
16	RL	PID forward-reverse rotation output		
98	LF	Minor fault output	Output when a minor fault (fan failure or communication error warning) occurs.	Pr. 122, Pr. 244
99	ABC	Alarm output	Output when the inverter's protective function is activated to stop the output (major fault).	——

Note: 1. The same function may be set to more than one terminal.
2. Pr. 190 to Pr. 192 do not function if the values set are other than the above.

Pr. 232 to Pr. 239 ➔ Refer to Pr. 4.

Pr. 240 ➔ Refer to Pr. 72.

4.2.45 Cooling fan operation selection (Pr. 244)

Pr. 244 "cooling fan operation selection"

You can control the operation of the cooling fan built in the inverter (whether there is a cooling fan or not depends on the models. Refer to the outline dimensional drawing (Refer to page 196).)

Parameter Number	Factory Setting	Setting Range
244	0	0, 1

<Setting>

Setting	Description
0	Operated at power on (independent of whether the inverter is running or at a stop).
1	Cooling fan on-off control valid (The cooling fan is always on while the inverter is running. During a stop, the inverter status is monitored and the fan switches on-off according to temperature.)

<Reference>

In either of the following cases, fan operation is regarded as faulty, [FN] is shown on the control panel, and the minor fault (LF) signal is output. Use any of Pr. 190 to Pr. 192 (output terminal function selection) to allocate the terminal used to output the LF signal.

1) Pr. 244 = "0"
   When the fan comes to a stop with power on.
2) Pr. 244 = "1"
   When the inverter is running and the fan stops during fan ON command or the fan starts during fan OFF command.

Note:	When the terminal assignment is changed using Pr. 190 to Pr. 192, the other functions may be affected. Confirm the functions of the corresponding terminals before making settings.

4.2.46 Slip compensation (Pr. 245 to Pr. 247)

Pr. 245 "rated motor slip"

Pr. 246 "slip compensation response time"

Pr. 247 "constant-output region slip compensation selection"

The inverter output current may be used to assume motor slip to keep the motor speed constant.

Parameter Number	Factory Setting	Setting Range	Remarks
245	9999	0 to 50%, 9999	9999: No slip compensation
246	0.5	0.01 to 10 s	
247	9999	0, 9999	9999: Slip compensation made

<Setting>

$$\text{Rated slip} = \frac{\text{Synchronous speed at base frequency - rated speed}}{\text{Synchronous speed at base frequency}} \times 100[\%]$$

Parameter Number	Setting	Function
245	0 to 50%	Used to set the rated motor slip.
	9999	Slip compensation is not made.
246	0.01 to 10 s	Used to set the slip compensation response time. (Note)
247	0	Slip compensation is not made in the constant output range (frequency range above the frequency set in Pr. 3).
	9999	Slip compensation is made in the constant output range.

Note: When this value is made smaller, response will be faster.
However, as load inertia is greater, a regenerative overvoltage (OVT) error is more liable to occur.

4.2.47 Ground fault detection at start (Pr. 249) (400V class does not have this function)

Pr. 249 "ground fault detection at start"

You can select whether ground fault detection at start is made or not. Ground fault detection is made only immediately after the start signal is input to the inverter.
If a ground fault occurs during operation, the protective function is not activated.

Parameter Number	Factory Setting	Setting Range
249	0	0, 1

<Setting>

Setting	Description
0	Ground fault detection not made
1	Ground fault detection made

Note: 1. Since detection is made at a start, an about 20ms output delay occurs at every start.
2. When a ground fault is detected with "1" set in Pr. 249, alarm output "E.GF" is detected and the output is shut off.
3. If the motor capacity is less than 0.1kW, protection may not be provided against a ground fault.

4.2.48 Stop selection (Pr. 250)

Pr. 250 "stop selection"

Related parameters

Pr. 7 "acceleration time"
Pr. 8 "deceleration time"
Pr. 44 "second acceleration/ deceleration time"
Pr. 45 "second deceleration time"

Used to select the stopping method (deceleration to a stop or coasting) when the start signal (STF/STR) switches off.

Parameter Number	Factory Setting	Setting Range
250	9999	0 to 100 s, 1000 to 1100 s, 8888, 9999

(1) Pr. 250 = "9999"

When the start signal switches off, the motor is decelerated to a stop.

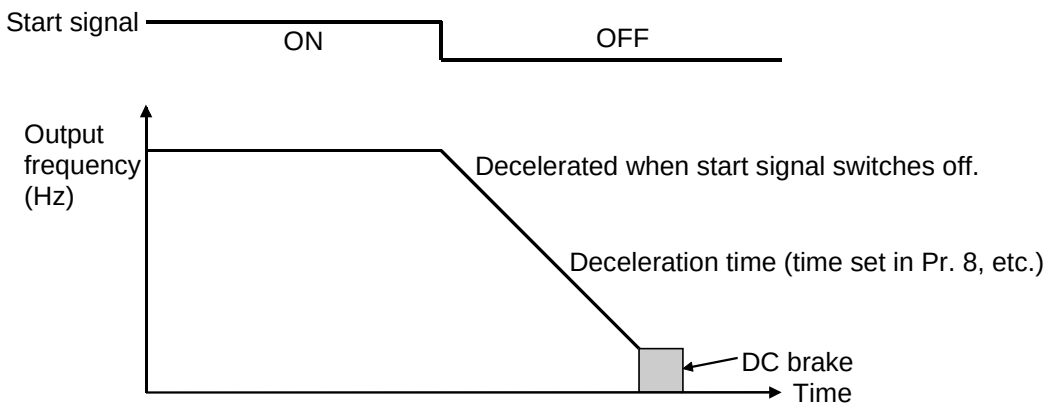

(2) Pr. 250 = 0 to 100 seconds (output is shut off after preset time)

The output is shut off when the time set in Pr. 250 has elapsed after the start signal was switched off. The motor coasts to a stop.

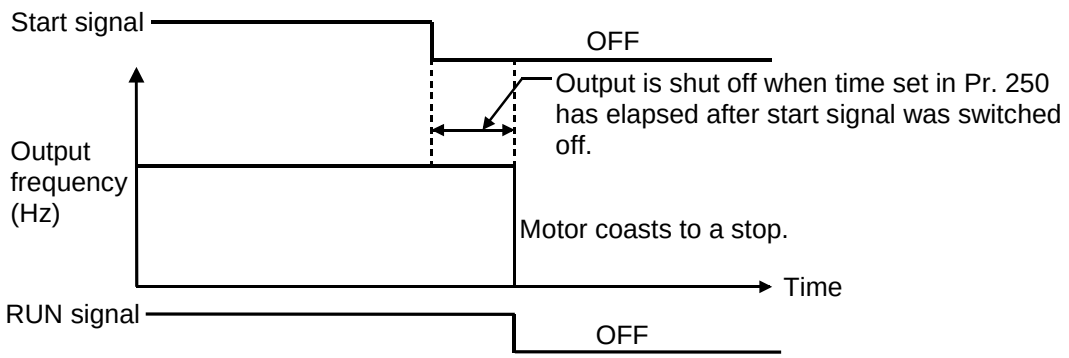

When the Pr. 250 value is 8888, the functions of terminals STF and STR change as shown below:
STF = start signal, STR = rotation direction signal

STF	STR	Inverter Operating Status
OFF	OFF	Stop
OFF	ON	
ON	OFF	Forward rotation
ON	ON	Reverse rotation

When the Pr. 250 value is any of 1000 to 1100 s, the functions of terminals STF and STR are the same as when the Pr. 250 value is 8888.
Also, for the stopping method used when the start signal switches off, the output is shut off (the motor coasts to a stop) after the period set in Pr. 250 (i.e. 1000 s) have elapsed.

Note: 1. The RUN signal switches off when the output stops.
2. When the start signal is switched on again during motor coasting, the motor starts at 0Hz.
3. When the Pr. 250 value is 0, the output is shut off within the shortest time.

4.2.49 Output phase failure protection selection (Pr. 251)

Pr. 251 " Output phase failure protection selection "

You can make invalid the output phase failure protection (E.LF) function which stops the inverter output if one of the three phases (U, V, W) on the inverter's output side (load side) becomes open.
Choose "without output phase failure protection" when the motor capacity is smaller than the inverter capacity (when the output current is less than approximately 25% of the rated inverter current value as a guideline), since performing operation in such a case may activate output phase failure protection.

Parameter Number	Setting Range	Minimum Setting Increments	Factory Setting	Description
251	0, 1	1	1	0: Without output phase failure protection 1: With output phase failure protection

4.2.50 Meter (frequency meter) calibration (Pr. 900) (200V class, 100V class)

Related parameters

Pr. 54 "FM terminal function selection"
Pr. 55 "frequency monitoring reference"
Pr. 56 "current monitoring reference"

Pr. 900 "FM terminal calibration"

- By using the control panel or parameter unit, you can calibrate a meter connected to terminal FM to full scale deflection.
- Terminal FM provides the pulse output. By setting Pr. 900, you can calibrate the meter connected to the inverter from the parameter unit without providing a calibration resistor.
- You can display a digital value on a digital counter using the pulse train signal from terminal FM. A 1440pulses/s output is provided at the full scale value as explained in the section of Pr. 54. When the running frequency has been selected for monitoring, the ratio of this FM terminal output frequency can be set in Pr. 55.

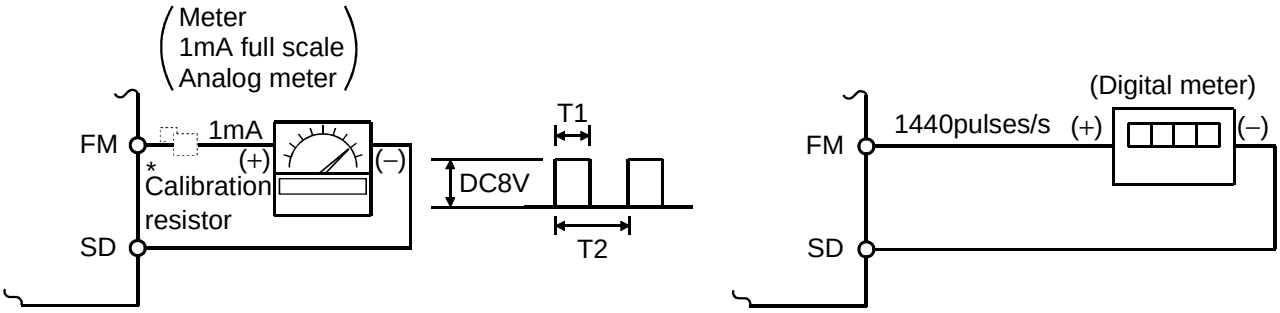

Pulse width T1 : Adjusted with Pr. 900
Pulse period T2 : Set in Pr. 55 (frequency monitoring)
Set in Pr. 56 (current monitoring)

Note : The parameter is factory-set to 1mA full-scale or 1440pulses/s.
FM output frequency at 60Hz.

* Not needed when the control panel (FR-PA-02-02) or parameter unit (FR-PU04) is used for calibration. Used when calibration must be made near the frequency meter for such a reason as a remote frequency meter. However, the frequency meter needle may not deflect to full-scale if the calibration resisitor is connected. In this case, use this resistor and the control panel or parameter unit together.

(1) Calibration of terminal FM

1) Connect a meter (frequency meter) across inverter terminals FM-SD.
(Note the polarity. FM is the positive terminal.)
2) When a calibration resistor has already been connected, adjust the resistance to "0" or remove the resistor.
3) Set any of "0 to 2" in Pr. 54.
When the running frequency or inverter output current has been selected as the output signal, preset in Pr. 55 or Pr. 56 the running frequency or current at which the output signal is 1440pulses/s.
At this 1440pulses/s, the meter normally deflects to full scale.

<Operation procedure>

- When using the control panel (FR-PA02-02)

1) Select the PU operation mode.

↓

2) Set the running frequency.

↓

3) Press the SET key.

↓

4) Read Pr. 900 "FM terminal calibration".

↓

5) Press the FWD key to run the inverter. (Motor need not be connected.)

↓

6) Hold down the ▲/▼ key to adjust the meter pointer to a required position.
(Depending on the setting, it may take some time unit the pointer moves.)

↓

7) Press the SET key for about 1.5s.

↓

8) Press the STOP RESET key to stop the inverter.

REMARKS

Calibration can also be made for external operation. Set the frequency in the external mode and make calibration in the steps 4) to 8).

Note: 1. Pr. 900 is factory-set to 1mA full-scale or 1440 pulses/s. FM output frequency at 60Hz. The maximum pulse train output of terminal FM is 2400 pulses/s.
2. When a frequency meter is connected across terminals FM-SD to monitor the running frequency, the FM terminal output is filled to capacity at the factory setting if the maximum output frequency reaches or exceeds 100Hz. In this case, the Pr. 55 setting must be changed to the maximum frequency.
3. It is possible to calibrate even during operation.

4.2.51 Meter (frequency meter) calibration (Pr. 901) (400V class)

Pr. 901 "AM terminal calibration"

Related parameters

Pr. 55 "frequency monitoring reference"
Pr. 56 "current monitoring reference"
Pr. 158 "AM terminal function selection"

- By using the control panel or parameter unit, you can calibrate a meter connected to terminal AM to full scale deflection.
- Terminal AM is factory-set to provide a 10VDC output in the full-scale state of each monitored data. Pr. 901 allows the output voltage ratio (gain) to be adjusted according to the meter reading. Note that the maximum output voltage is 10VDC.

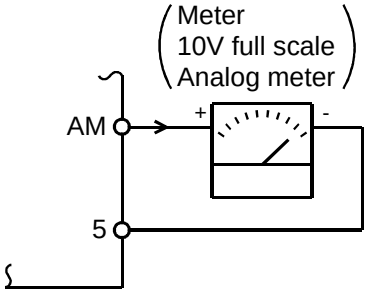

(1) Calibration of terminal AM

1) Connect a 0-10VDC meter (frequency meter) across inverter terminals AM-5. (Note the polarity. AM is the positive terminal.)
2) Set any of "0, 1, 2" in Pr. 158.
   When the running frequency or inverter output current has been selected as the output signal, preset in Pr. 55 or Pr. 56 the running frequency or current at which the output signal is 10V.

<Operation procedure>

- When using the control panel (FR-PA02-02)

1) Select the PU operation mode.

↓

2) Set the running frequency.

↓

3) Press the SET key.

↓

4) Read Pr. 901 "AM terminal calibration".

↓

5) Press the FWD key to run the inverter. (Motor need not be connected.)

↓

6) Hold down the ▲/▼ key to adjust the meter pointer to a required position.
(Depending on the setting, it may take some time until the pointer moves.)

↓

7) Press the SET key for about 1.5s.

↓

8) Press the STOP RESET key to stop the inverter.

REMARKS

Calibration can also be made for external operation. Set the frequency in the external mode and make calibration in the steps 4) to 8).

Note: It is possible to calibrate even during operation.

4.2.52 Biases and gains of the frequency setting voltage (current) (Pr. 902 to Pr. 905)

Pr. 902 "frequency setting voltage bias"

Pr. 903 "frequency setting voltage gain"

Pr. 904 "frequency setting current bias"

Pr. 905 "frequency setting current gain"

Related parameters

Pr. 38 "frequency at 5V (10V) input"
Pr. 39 "frequency at 20mA input"
Pr. 73 "0-5/0-10V selection"
Pr. 79 "operation mode selection"

The "bias" and "gain" functions are used to adjust the relationship between the input signal entered from outside the inverter (to set the output frequency), i.e. 0 to 5VDC, 0 to 10VDC or 4 to 20mADC, and the output frequency.

- Use Pr. 902 to set the bias of the voltage signal and use Pr. 903 to set its gain.
- Use Pr. 904 to set the bias of the current signal and use Pr. 905 to set its gain.

Parameter Number	Factory Setting		Setting Range	
902	0V	0Hz	0 to 10V	0 to 60Hz
903	5V	60Hz	0 to 10V	1 to 400Hz
904	4mA	0Hz	0 to 20mA	0 to 60Hz
905	20mA	60Hz	0 to 20mA	1 to 400Hz

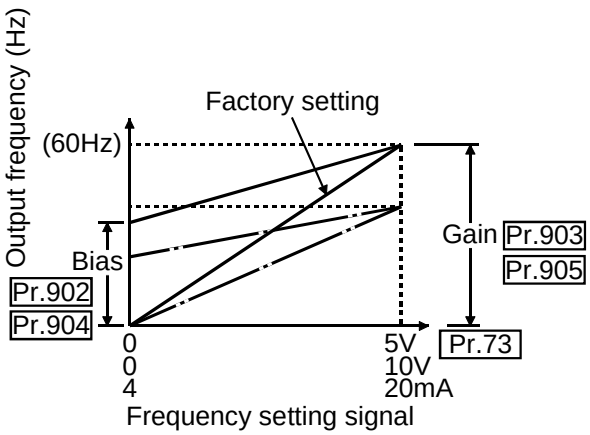

<Setting>

(1) The frequency setting voltage (current) biases and gains may be adjusted by any of the three following ways:

1) Any point can be adjusted with a voltage applied across terminals 2-5 (with a current flowing across terminals 4-5).
2) Any point can be adjusted with no voltage applied across terminals 2-5 (with no current flowing across terminals 4-5).
3) Only the bias and gain frequencies are adjusted and the voltage (current) is not adjusted.

Pr. 903 "frequency setting voltage gain"

(Pr.902, Pr. 904, Pr. 905 can also be adjusted similarly.)

<Adjustment procedure> When using an external frequency setting signal to set the frequency.

(1) Power-on (monitoring mode)

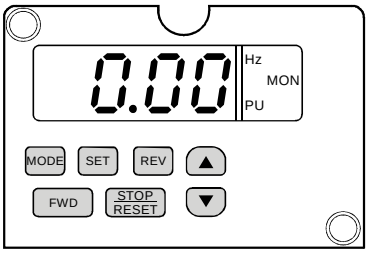

(2) Choose the PU operation mode.

1) Using the MODE key, make sure that the PU operation mode has been selected.

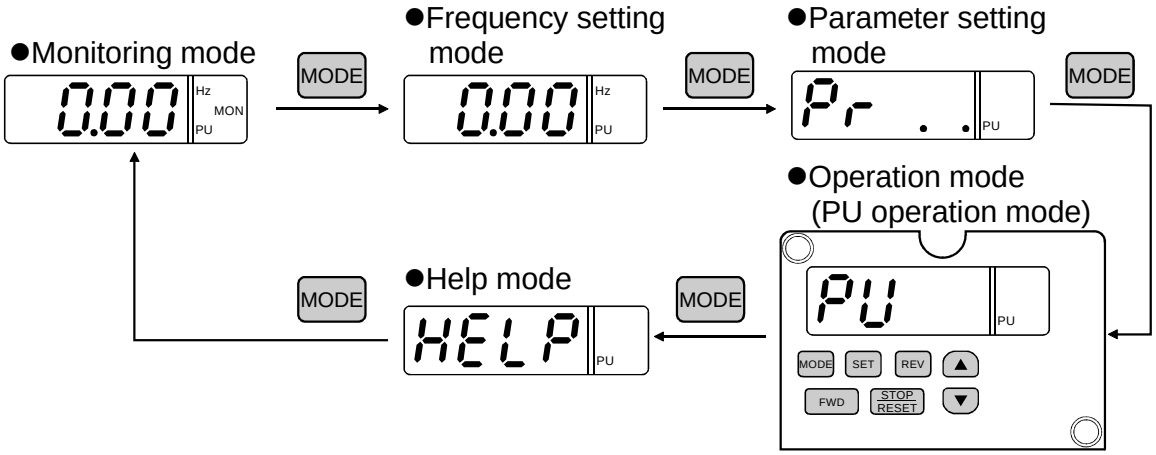

Confirm that the PU operation mode (PU) has been chosen.
In the JOG operation mode (JOG)
or external operation mode (OP.Md),
press the ▲/▼ key to display PU .
If PU cannot be displayed by pressing the ▲/▼ key in the external operation mode (OP.Md).
(if Pr. 79 "operation mode selection" ≠ "0"), refer to 2) and set "1" (PU operation mode) in Pr. 79 "operation mode selection".

2) Set "1" (PU operation mode) in Pr. 79 "operation mode selection".

Example: To change the external operation mode (Pr. 79=2) to the PU operation mode (Pr. 79=1)

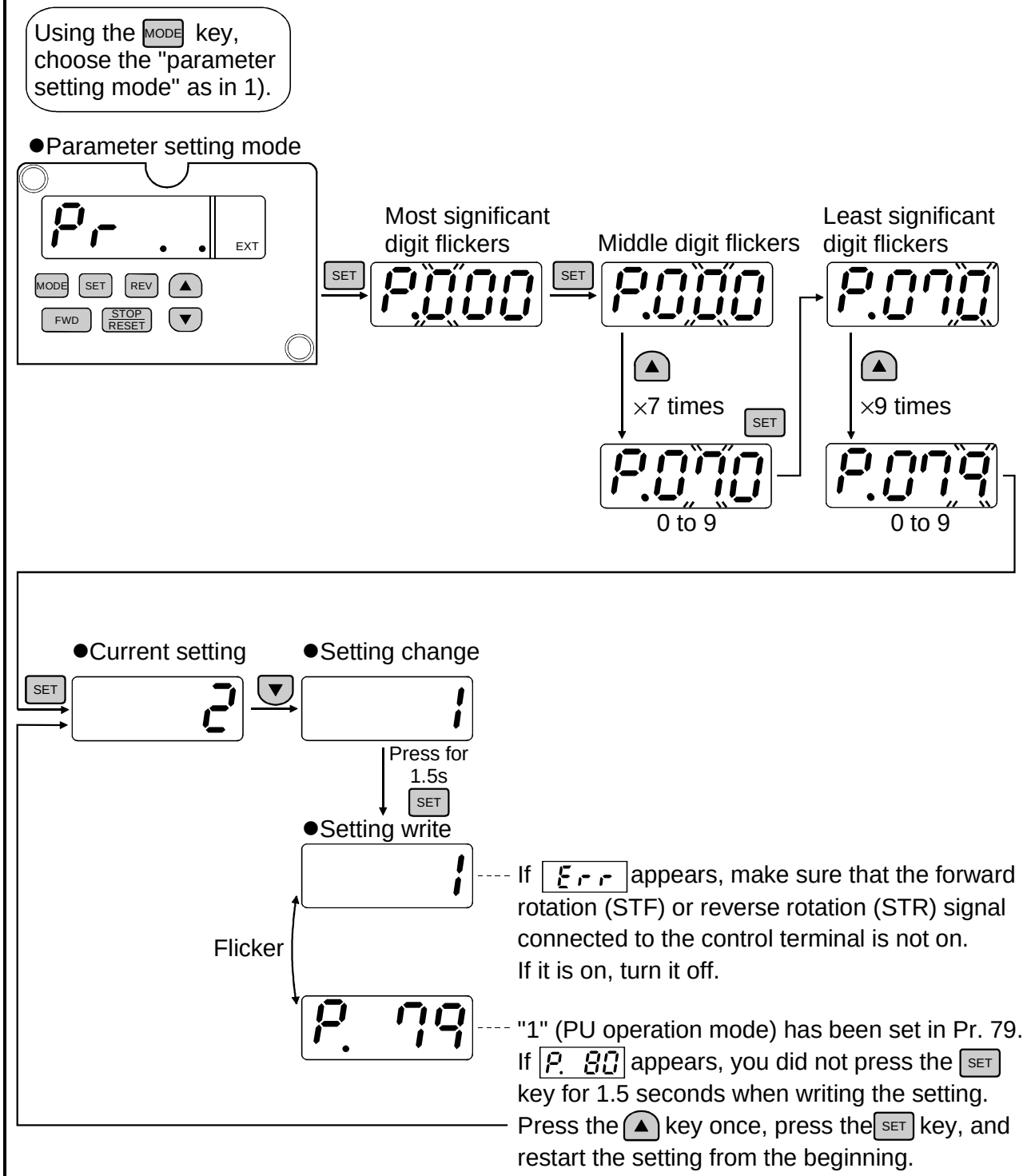

(3) Read Pr. 903 and show the current setting of the gain frequency.
(Pr. 902, Pr. 904 and Pr. 905 can also be adjusted similarly.)

●Parameter setting mode

Using the MODE key, choose the "parameter setting mode" as in (2)-1).

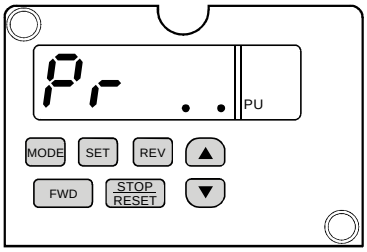

SET

Most significant digit flickers.

×9 times

SET

0 to 9

Middle digit flickers.

SET

Least significant digit flickers.

×3 times

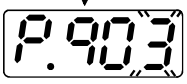

SET

0 to 9

Current setting of gain frequency

(4) Set a gain frequency in Pr. 903 and show the analog voltage A/D value across terminals 2-5 in %. (when the frequency is set to 80Hz)

Current setting of gain frequency

●Changing the gain frequency

Press ▲▼ to change the set frequency.

Press for 1.5s

SET

●Analog voltage A/D value (%) across terminals 2-5

In any of the methods in (5) to (7) on the following page, continue the setting until the analog voltage A/D value flickers. If you end the setting here, the gain frequency change will not be reflected.

1) When not adjusting the gain voltage → go to (5)
2) When adjusting any point by applying a voltage → go to (6)
3) When adjusting any point without applying a voltage → go to (7)

(5) How to adjust the gain frequency only without the voltage being adjusted

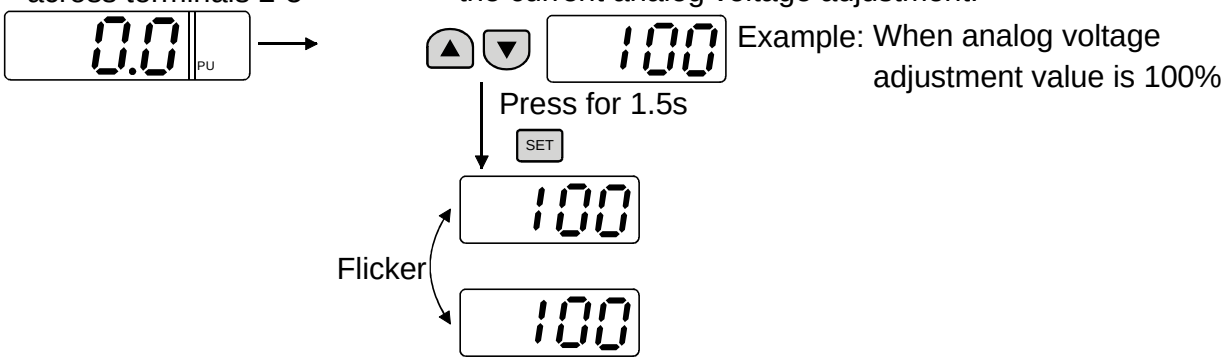

(6) How to adjust any point by applying a voltage across terminals 2-5 (e.g. from the external potentiometer) (current: across terminals 4-5) (When applying 5V)

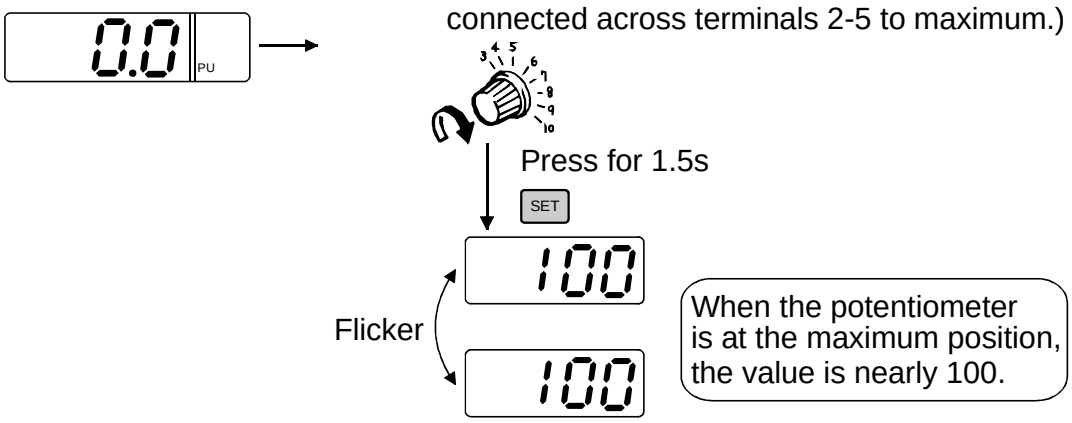

(7) How to adjust any point without applying a voltage across terminals 2-5 (without a current flowing across terminals 4-5) (when changing from 4V (80%) to 5V (100%))

(8) Press the SET key to shift to the next parameter.
(9) Re-set Pr. 79 "operation mode selection" according to the operation mode to be used.

Note: 1. If the Pr. 903 or Pr. 905 (gain adjustment) value is changed, the Pr. 20 value does not change.
2. When the Pr. 903 or Pr. 905 value is set, the value of Pr. 38 "frequency at 5V (10V) input" or Pr. 39 "frequency at 20mA input" changes automatically.

⚠ CAUTION

⚠ **Be careful when setting the bias frequency at 0V to any value other than "0". Even without the speed command, the motor will start running at the set frequency by merely switching on the start signal.**

CHAPTER 5
PROTECTIVE FUNCTIONS

This chapter explains the "protective functions" of this product.
Always read the instructions before using the equipment.

5.1 Errors (Alarms) 166
5.2 Troubleshooting 175
5.3 Precautions for Maintenance and Inspection 178

5.1 Errors (Alarms)

If any fault has occurred in the inverter, the corresponding protective function is activated to bring the inverter to an alarm stop and automatically give the corresponding error (alarm) indication on the optional control panel or the panel display.
If your fault does not correspond to any of the following errors or if you have any other problem, please contact your sales representative.

- Retention of alarm output signal ..... When the magnetic contactor (MC) provided on the power supply side of the inverter is opened at the activation of the protective function, the inverter's control power will be lost and the alarm output will not be held.
- Alarm indication ..... When the protective function is activated, the operation panel display automatically switches to the above indication.
- Resetting method ..... When the protective function is activated, the inverter output is kept stopped. Unless reset, therefore, the inverter cannot restart. Switch power off once, then on again; or apply RES signal for more than 0.1 seconds. Kept on, "Err." appears (flickers) to indicate that the inverter is being reset.
- When the protective function is activated, take the corresponding corrective action, then reset the inverter, and resume operation.

5.1.1 Error (alarm) definitions

(1) Major faults

When the protective function is activated, the inverter output is shut off and the alarm is output.

Operation Panel Indication	E. OC1	E.OC 1	**FR-PU04**	OC During Acc
Name	Overcurrent shut-off during acceleration			
Description	When the inverter output current reaches or exceeds approximately 200% of the rated current during acceleration, the protective circuit is activated to stop the inverter output.			
Check point	Check for sudden acceleration. Check for output short-circuit/ground fault.			
Corrective action	Increase the acceleration time.			

Operation Panel Indication	E. OC2	E.OC 2	**FR-PU04**	Stedy Spd OC
Name	Overcurrent shut-off during constant speed			
Description	When the inverter output current reaches or exceeds approximately 200% of the rated current during constant speed, the protective circuit is activated to stop the inverter output.			
Check point	Check for sudden load change. Check for output short-circuit/ground fault.			
Corrective action	Keep load stable.			

Operation Panel Indication	E. OC3	E.OC3	**FR-PU04**	OC During Dec
Name	Overcurrent shut-off during deceleration			
Description	When the inverter output current reaches or exceeds approximately 200% of the rated current during deceleration (other than acceleration or constant speed), the protective circuit is activated to stop the inverter output.			
Check point	Check for sudden speed reduction. Check for output short-circuit/ground fault. Check for too fast operation of motor's mechanical brake.			
Corrective action	Increase the deceleration time. Adjust brake operation.			

Operation Panel Indication	E. OV1	E.OV1	**FR-PU04**	OV During Acc
Name	Regenerative overvoltage shut-off during acceleration			
Description	If regenerative energy causes the inverter's internal main circuit DC voltage to reach or exceed the specified value, the protective circuit is activated to stop the inverter output. It may also be activated by a surge voltage generated in the power supply system.			
Check point	Check for too slow acceleration.			
Corrective action	Decrease the acceleration time.			

Operation Panel Indication	E. OV2	E.OV2	**FR-PU04**	Stedy Spd OV
Name	Regenerative overvoltage shut-off during constant speed			
Description	If regenerative energy causes the inverter's internal main circuit DC voltage to reach or exceed the specified value, the protective circuit is activated to stop the inverter output. It may also be activated by a surge voltage generated in the power supply system.			
Check point	Check for sudden load change.			
Corrective action	• Keep load stable. • Use the brake unit or high power factor converter (FR-HC) as required.			

Operation Panel Indication	E. OV3	E.Ov3	**FR-PU04**	OV During Dec
Name	Regenerative overvoltage shut-off during deceleration or stop			
Description	If regenerative energy causes the inverter's internal main circuit DC voltage to reach or exceed the specified value, the protective circuit is activated to stop the inverter output. It may also be activated by a surge voltage generated in the power supply system.			
Check point	Check for sudden speed reduction.			
Corrective action	• Increase the deceleration time. (Set the deceleration time which matches the inertia moment of the load.) • Decrease the braking duty. • Use the brake unit or high power factor converter (FR-HC) as required.			

Operation Panel Indication	E. THM	E.THM	**FR-PU04**	Motor Overload
Name	Motor overload shut-off (electronic overcurrent protection) (Note 1)			
Description	The electronic overcurrent protection in the inverter detects motor overheat due to overload or reduced cooling capability during constant-speed operation to stop the inverter output. When a multi-pole motor or two or more motors are run, provide a thermal relay in the output side of the inverter.			
Check point	Check the motor for use under overload.			
Corrective action	• Reduce the load weight. • For the constant-torque motor, change the Pr. 71 setting to the constant-torque motor setting.			

Operation Panel Indication	E. THT	E.THT	**FR-PU04**	Inv. Overload
Name	Inverter overload shut-off (electronic overcurrent protection) (Note 1)			
Description	If a current of more than 150% of the rated output current flows and overcurrent shut-off does not occur (200% or less), inverse-time characteristics cause the electronic overcurrent protection to be activated to stop the inverter output in order to protect the output transistors.			
Check point	Check the motor for use under overload.			
Corrective action	Reduce the load weight.			

Note: 1 Resetting the inverter initializes the internal heat integrating data of the electronic overcurrent protection.

Operation Panel Indication	E. FIN	E.FIn	**FR-PU04**	H/Sink O/Temp
Name	Fin overheat			
Description	If the cooling fin overheats, the overheat sensor is actuated to stop the inverter output.			
Check point	• Check for too high ambient temperature. • Check for cooling fin clogging.			
Corrective action	Set the ambient temperature to within the specifications.			

Operation Panel Indication	E. BE	E. bE	**FR-PU04**	Br. Cct. Fault (Note)
Name	Brake transistor alarm detection (Note 2)			
Description	If a brake transistor fault occurs due to excessively large regenerative energy from the motor, for example, that fault is detected to stop the inverter output. In this case, the inverter power must be switched off immediately.			
Check point	Check for improper braking duty.			
Corrective action	Change the inverter. Please contact your sales representative.			

Note: 2 This function is activated only when the optional brake resistor is connected.

Operation Panel Indication	E. GF	E. GF	**FR-PU04**	Ground Fault
Name	Output side ground fault overcurrent protection			
Description	This function stops the inverter output if a ground fault overcurrent flows due to a ground fault which occurred in the inverter's output (load) side. Use Pr. 249 "ground fault detection at start" to set whether the protective function is to be activated or not. (In the 400V class, the protective function is always active.)			
Check point	Check for a ground fault in the motor and connection cable.			
Corrective action	Remedy the ground fault portion.			

Operation Panel Indication	E. OHT	E.OHT	**FR-PU04**	OH Fault
Name	External thermal relay operation (Note 3)			
Description	If the external thermal relay designed for motor overheat protection or the internally mounted temperature relay in the motor switches on (contacts open), the inverter output is stopped. If the relay contacts are reset automatically, the inverter will not restart unless it is reset.			
Check point	• Check for motor overheating. • Check that the value of 7 (OH signal) is set correctly in any of Pr. 180 to Pr. 183 (input terminal function selection).			
Corrective action	Reduce the load and operating duty.			

Note: 3 This function is activated only when OH has been set to any of Pr. 180 to Pr. 183 (input terminal function selection).

Operation Panel Indication	E. OLT	E.OLT	**FR-PU04**	Stll Prev STP
Name	Stall prevention			
Description	The running frequency has fallen to 0 by stall prevention activated. (OL while stall prevention is being activated.)			
Check point	Check the motor for use under overload.			
Corrective action	Reduce the load weight.			

Operation Panel Indication	E. OPT	E.OPT	**FR-PU04**	Option Fault
Name	Option alarm			
Description	Stops the inverter output if the inverter station is disconnected from the system in the NET mode. (Note 4) Also stops the inverter output if the dedicated option used in the inverter results in setting error or connection (connector) fault.			
Check point	Check that the plug-in option connector is plugged securely.			
Corrective action	Connect the plug-in option securely. Please contact your sales representative.			

Note: 4 Only when the FR-E5NC is fitted to the three-phase 400V power input model.

Operation Panel Indication	E. PE	E. PE	**FR-PU04**	Corrupt Memory
Name	Parameter storage device alarm			
Description	A fault occurred in parameters stored (example: E^2PROM fault).			
Check point	Check for too many number of parameter write times.			
Corrective action	Please contact your sales representative.			

Operation Panel Indication	E. PUE	E.PUE	**FR-PU04**	PU Leave Out
Name	Parameter unit disconnection			
Description	This function stops the inverter output if communication between the inverter and PU is suspended, e.g. the PU is disconnected, when "2", "3", "16" or "17" was set in Pr. 75. This function stops the inverter output if the number of successive communication errors is greater than the number of permissible retries when the Pr. 121 value is "9999" for RS-485 communication from the PU connector.			
Check point	• Check for loose fitting of the control panel (FR-PA02-02) or FR-PU04. • Check the Pr. 75 setting.			
Corrective action	Fit the control panel (FR-PA02-02) and FR-PU04 securely.			

Operation Panel Indication	E. RET	E.rET	**FR-PU04**	Retry No Over
Name	Retry count exceeded			
Description	If operation cannot be resumed properly within the number of retries set, this function stops the inverter output.			
Check point	Find the cause of alarm occurrence.			
Corrective action	Eliminate the cause of the error preceding this error indication.			

Operation Panel Indication	E. CPU	E.CPU	**FR-PU04**	CPU Fault
Name	CPU error			
Description	If the arithmetic operation of the built-in CPU does not end within a predetermined period, the inverter self-determines it as an alarm and stops the output.			
Check point	———			
Corrective action	Please contact your sales representative.			

Operation Panel Indication	E. 6	E. 6	**FR-PU04**	Fault 6
	E. 7	E. 7		Fault 7
Name	CPU error			
Description	This function stops the inverter output if a communication error occurs in the built-in CPU. (400V class only)			
Check point	———			
Corrective action	Please contact your sales representative.			

Operation Panel Indication	E. LF	E.LF	**FR-PU04**	E. LF
Name	Output phase failure protection			
Description	This function stops the inverter output if one of the three phases (U, V, W) on the inverter's output side (load side) results in open phase.			
Check point	• Check the wiring (Check the motor for a fault.) • Check that the capacity of the used motor is not smaller than the inverter capacity.			
Corrective action	• Wire the cables properly. • Check the setting of Pr. 251 "output phase failure protection selection".			

(2) Minor fault

The output is not shut off when the protective function is activated. You can make parameter setting to output the minor fault signal. (Set "98" in any of Pr. 190 to Pr. 192 (output terminal function selection). Refer to page 150.)

Operation Panel Indication	FN	Fn	**FR-PU04**	Fan Failure
Name	Fan fault			
Description	For the inverter which contains a cooling fan, FN appears on the operation panel when the cooling fan stops due to a fault or operates differently from the setting of Pr. 244 "cooling fan operation selection".			
Check point	Check the cooling fan for a fault.			
Corrective action	Change the fan.			

(3) Warnings

Operation Panel Indication	OL	OL	**FR-PU04**	OL
Name	Stall prevention (overcurrent)			
Description	During acceleration	If a current of more than 150% (Note 5) of the rated inverter current flows in the motor, this function stops the increase in frequency until the overload current reduces to prevent the inverter from resulting in overcurrent shut-off. When the overload current has reduced below 150%, this function increases the frequency again.		
	During constant-speed operation	If a current of more than 150% (Note 5) of the rated inverter current flows in the motor, this function lowers the frequency until the overload current reduces to prevent overcurrent shut-off. When the overload current has reduced below 150%, this function increases the frequency up to the set value.		
	During deceleration	If a current of more than 150% (Note 5) of the rated inverter current flows in the motor, this function stops the decrease in frequency until the overload current reduces to prevent the inverter from resulting in overcurrent shut-off. When the overload current has reduced below 150%, this function decreases the frequency again.		
Check point	Check the motor for use under overload.			
Corrective action	The acceleration/deceleration time may change. Increase the stall prevention operation level with Pr. 22 "stall prevention operation level", or disable stall prevention with Pr. 156 "stall prevention operation selection".			

Note: 5 The stall prevention operation current can be set as desired. It is factory-set to 150%.

Operation Panel Indication	oL	oL	**FR-PU04**	oL
Name	Stall prevention (overvoltage)			
Description	During deceleration	If the regenerative energy of the motor increases too much to exceed the brake capability, this function stops the decrease in frequency to prevent overvoltage shut-off. As soon as the regenerative energy has reduced, deceleration resumes.		
Check point	Check for sudden speed reduction.			
Corrective action	The deceleration time may change. Increase the deceleration time using Pr. 8 "deceleration time"			

Operation Panel Indication	PS	PS	**FR-PU04**	PS
Name	PU stop			
Description	A stop made by pressing the STOP RESET key of the PU has been set in Pr. 75 "PU stop selection".			
Check point	Check for a stop made by pressing the STOP RESET key of the operation panel during external operation.			
Corrective action	Refer to page 106.			

Operation Panel Indication	Err.	Err.
Description	This alarm appears if: • The RES signal is on; • You attempted to set any parameter value in the external operation mode; • You attempted to change the operation mode during operation; • You attempted to set any parameter value outside its setting range. • You attempted to set any parameter value during operation (while signal STF or STR is ON). • You attempted to set any parameter value while parameter write is being inhibited in Pr. 77 "parameter write inhibit selection".	
Corrective action	Perform operation correctly.	

5.1.2 To know the operating status at the occurrence of alarm

When any alarm has occurred, the display automatically switches to the indication of the corresponding protective function (error). By pressing the MODE key at this point without resetting the inverter, the display shows the output frequency. In this way, it is possible to know the running frequency at the occurrence of the alarm. This also applies to the current. After resetting, you can confirm the data in the alarm history (refer to page 56).

5.1.3 Correspondence between digital and actual characters

There are the following correspondences between the actual alphanumeric characters and the digital characters displayed on the control panel (FR-PA02-02):

Actual	Display
0	0
1	1
2	2
3	3
4	4
5	5
6	6
7	7
8	8
9	9

Actual	Display
A	A
B	b
C	C
D	d
E	E
F	F
G	G
H	H
I	I
J	J
L	L

Actual	Display
M	M
N	n
O	O
o	o
P	P
S	S
T	T
U	U
V	v
r	r
-	-

5.1.4 Resetting the inverter

The inverter can be reset by performing any of the following operations. Note that the electronic overcurrent protection's internal heat calculation value and the number of retries are cleared (erased) by resetting the inverter.

Operation 1: ..... Using the control panel (FR-PA02-02), press the STOP RESET key to reset the inverter. (This may only be performed when the inverter protective function (major fault) is activated.)

Operation 2: ..... Switch power off once, then switch it on again.

Operation 3: ..... Switch on the reset signal (RES).

POINT: Check the corresponding areas. If the cause is still unknown, it is recommended to initialize the parameters (return to factory settings), re-set the required parameter values, and check again.

5.2.1 Motor remains stopped

- 1) Check the main circuit
  - Check that a proper power supply voltage is applied (control panel display is provided).
  - Check that the motor is connected properly.
  - Check that the conductor across P1-P(+) is connected.
- 2) Check the input signals
  - Check that the start signal is input.
  - Check that both the forward and reverse rotation start signals are not input.
  - Check that the frequency setting signal is not zero.
  - Check that the AU signal is on when the frequency setting signal is 4 to 20mA.
  - Check that the output stop signal (MRS) or reset signal (RES) is not on.
  - Check that the sink/source connector is fitted securely (400V class only).
- 3) Check the parameter settings
  - Check that the reverse rotation prevention (Pr. 78) is not selected.
  - Check that the operation mode (Pr. 79) setting is correct.
  - Check that the bias and gain (Pr. 902 to Pr. 905) settings are correct.
  - Check that the starting frequency (Pr. 13) setting is not greater than the running frequency.
  - Check that various operational functions (such as three-speed operation), especially the maximum frequency (Pr. 1), are not zero.
  - Check that the manufacturer setting parameter Pr. 146 = 1.
- 4) Check the load
  - Check that the load is not too heavy.
  - Check that the shaft is not locked.
- 5) Others
  - Check that the ALARM lamp is off.
  - Check that the control panel display does not show an error (e.g. E.OC1).
  - Check that the Pr. 15 "jog frequency" setting is not lower than the Pr. 13 "starting frequency" value.

5.2.2 Motor rotates in opposite direction

- Check that the phase sequence of output terminals U, V and W is correct.
- Check that the start signals (forward rotation, reverse rotation) are connected properly.

5.2.3 Speed greatly differs from the setting

- Check that the frequency setting signal is correct. (Measure the input signal level.)
- Check that the following parameter settings are correct (Pr. 1, Pr. 2, Pr. 19, Pr. 38, Pr. 39, Pr. 245, Pr. 902 to Pr. 905).
- Check that the input signal lines are not affected by external noise. (Use shielded cables)
- Check that the load is not too heavy.

5.2.4 Acceleration/deceleration is not smooth

- Check that the acceleration and deceleration time settings are not too short.
- Check that the load is not too heavy.
- Check that the torque boost setting is not too large to activate the stall prevention function.

5.2.5 Motor current is large

- Check that the load is not too heavy.
- Check that the torque boost setting is not too large.

5.2.6 Speed does not increase

- Check that the maximum frequency setting is correct.
- Check that the load is not too heavy. (In agitators, etc., load may become heavier in winter.)
- Check that the torque boost setting is not too large to activate the stall prevention function.
- Check that the brake resistor is not connected to terminals P (+) - P1 accidentally.

5.2.7 Speed varies during operation

When slip compensation is selected, the output frequency varies with load fluctuation between 0 and 2Hz. This is a normal operation and is not a fault.

1) Inspection of load
   - Check that the load is not varying.

2) Inspection of input signal
   - Check that the frequency setting signal is not varying.
   - Check that the frequency setting signal is not affected by noise.
   - Check that a malfunction does not occur due to an undesirable current when the transistor output unit is connected, for example. (Refer to page 23.)

3) Others
   - Check that the setting of the applied motor capacity (Pr. 80) is correct for the inverter capacities in general-purpose magnetic flux vector control.
   - Check that the wiring length is within 30m (98.42 feet) in general-purpose magnetic flux vector control.
   - Check that the wiring length is correct in V/F control.

5.2.8 Operation mode is not changed properly

If the operation mode does not change correctly, check the following:

1. External input signal ..... Check that the STF or STR signal is off. When it is on, the operation mode cannot be changed.

2. Parameter setting ..... Check the Pr. 79 setting.
When the setting of Pr. 79 "operation mode selection" is "0", switching input power on places the inverter in the external operation mode. By pressing the MODE key twice and pressing the ▲ key, the external operation mode changes to the PU operation mode.
For any other setting (1 to 8), the operation mode is limited according to the setting.
(For details of Pr. 79, refer to page 110.)

5.2.9 Control panel display is not operating

- Make sure that the control panel is connected securely with the inverter.
- Check for a short circuit across terminals PC-SD.
- Check that the jumper across terminals P (+) - P1 is fitted securely.

5.2.10 POWER lamp is not lit

- Make sure that the wiring and installation are correct.

5.2.11 Parameter write cannot be performed

- Make sure that operation is not being performed (signal STF or STR is not ON).
- Make sure that you pressed the SET key (WRITE key) for longer than 1.5 seconds.
- Make sure that you are not attempting to set the parameter outside the setting range.
- Make sure that you are not attempting to set the parameter in the external operation mode.
- Check Pr. 77 "parameter write inhibit selection".

5.3 Precautions for Maintenance and Inspection

The transistorized inverter is a static unit mainly consisting of semiconductor devices. Daily inspection must be performed to prevent any fault from occurring due to adverse influence by the operating environment, such as temperature, humidity, dust, dirt and vibration, changes in the parts with time, service life, and other factors.

5.3.1 Precautions for maintenance and inspection

For some short time after the power is switched off, a high voltage remains in the smoothing capacitor. Therefore, when more than 10 minutes have elapsed after power-off, make sure that the voltage across the main circuit terminals P (+) - N (–) of the inverter is 30VDC or less using a meter, etc. Then, access the inverter for inspection.

5.3.2 Check items

(1) Daily inspection

- Check the following:
  1) Motor operation fault
  2) Improper installation environment
  3) Cooling system fault
  4) Unusual vibration and noise
  5) Unusual overheating and discoloration
- During operation, check the inverter input voltages using a meter.

(2) Cleaning

Always run the inverter in a clean state.
When cleaning the inverter, gently wipe dirty areas with a soft cloth immersed in neutral detergent or ethanol.

Note:	Do not use solvent, such as acetone, benzene, toluene and alcohol, as they will cause the inverter surface paint to peel off. Do not use detergent or alcohol to clean the display and other sections of the control panel as these sections may deform.

5.3.3 Periodic inspection

Check the areas inaccessible during operation and requiring periodic inspection.

1) Cooling system: .....Clean the air filter, etc.
2) Screws and bolts: .....These parts may become loose due to vibration, temperature changes, etc. Check that they are tightened securely and retighten as necessary.
3) Conductors and insulating materials: Check for corrosion and damage.
4) Insulation resistance: Measure.
5) Cooling fan, smoothing capacitor: Check and change if necessary.

5.3.4 Insulation resistance test using megger

1) Before performing the insulation resistance test using a megger on the external circuit, disconnect the cables from all terminals of the inverter so that the test voltage is not applied to the inverter.
2) For the continuity test of the control circuit, use a meter (high resistance range) and do not use the megger or buzzer.
3) For the inverter, conduct the insulation resistance test on the main circuit only as shown below and do not perform the test on the control circuit. (Use a 500VDC megger.)

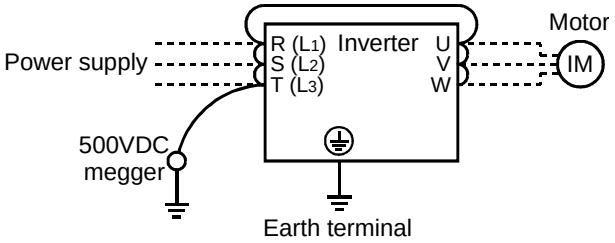

5.3.5 Pressure test

Do not conduct a pressure test. The inverter's main circuit uses semiconductors, which may deteriorate if a pressure test is made.

5.3.6 Daily and Periodic Inspection

Area of Inspection	Inspection Item	Description	Interval			Method	Criterion	Instrument
			Daily	Periodic* 1 year	Periodic* 2 years			
General	Surrounding environment	Check ambient temperature, humidity, dust, dirt, etc.	○			Refer to page 12.	Ambient temperature: -10°C to +50°C (14°F to 122°F), non-freezing. Ambient humidity: 90% or less, non-condensing.	Thermometer, hygrometer, recorder
	Overall unit	Check for unusual vibration and noise.	○			Visual and auditory checks.	No fault.	
	Power supply voltage	Check that main circuit voltage is normal.	○			Measure voltage across inverter terminals R-S-T (L1-L2-L3).	Within permissible AC (DC) voltage fluctuation (Refer to page 191).	Meter, digital multimeter
Main circuit	General	(1) Check with megger (across main circuit terminals and ground terminal). (2) Check for loose screws and bolts. (3) Check for overheat on each part. (4) Clean.		○ ○ ○	○	(1) Disconnect all cables from inverter and measure across terminals R (L1), S (L2), T (L3), U, V, W and ground terminal with megger. (2) Retighten. (3) Visual check.	(1) 5MΩ or more. (2), (3) No fault.	500VDC class megger
	Conductors, cables	(1) Check conductors for distortion. (2) Check cable sheaths for breakage.		○ ○		(1), (2) Visual check.	(1), (2) No fault.	
	Terminal block	Check for damage.		○		Visual check	No fault	
	Inverter module Converter module	Check resistance across terminals.			○	Disconnect cables from inverter and measure across terminals R, S, T-P, N (L1, L2, L3 - +, –), and across U, V, W-P (+), N (–) with a meter with a 100Ω range.	Refer to page 182.	Analog meter
	Smoothing capacitor	(1) Check for liquid leakage. (2) Check for safety valve projection and bulge. (3) Measure electrostatic capacity.	○ ○	○		(1), (2) Visual check. (3) Measure with capacity meter.	(1), (2) No fault. (3) 85% or more of rated capacity.	Capacity meter

Area of Inspection	Inspection Item	Description	Interval			Method	Criterion	Instrument
			Daily	Periodic*				
				1 year	2 years			
Main circuit	Relay	(1) Check for chatter during operation. (2) Check for rough surface on contacts.		○ ○		(1) Auditory check. (2) Visual check.	(1) No fault. (2) No fault.	
Control circuit Protective circuit	Operation check	(1) Check balance of output voltages across phases with inverter operated independently. (2) Perform sequence protective operation test to make sure there is no fault in protective or display circuits.		○ ○		(1) Measure voltage across inverter output terminals U-V-W. (2) Simulate connection of inverter protective circuit output terminals.	(1) Phase-to-phase voltage balance within 4V (8V) for 200V (400V). (2) Fault must occur because of sequence.	Digital multimeter, rectifier type voltmeter
Cooling system	Cooling fan	(1) Check for unusual vibration and noise. (2) Check for loose connection.	○	○		(1) Turn by hand with power off. (2) Visual check.	No unusual vibration and unusual noise.	
Display	Display	(1) Check for LED lamp blown. (2) Clean.	○	○		(1) Lamps indicate indicator lamps on panel. (2) Clean with rag.	(1) Check that lamps are lit.	
	Meter	Check that reading is normal.	○			Check reading of meters on panel.	Must satisfy specified and management values.	Voltmeter, ammeter, etc.
Motor	General	(1) Check for unusual vibration and noise. (2) Check for unusual odor.	○ ○			(1) Auditory, sensory, visual checks. (2) Check for unusual odor due to overheats, damage, etc.	(1), (2) No fault.	
	Insulation resistance	Check with megger (across terminals and ground terminal).			○	Disconnect cables from U, V, W, including motor cables.	5MΩ or more.	500V megger

Note: The values within the parentheses are for the 400V class.

* For periodic inspection, contact you nearest Mitsubishi sales representative.

● **Checking the inverter and converter modules**

<Preparation>

(1) Disconnect the external power supply cables (R, S, T (L_1, L_2, L_3)) and motor cables (U, V, W).
(2) Prepare a meter. (Use 100Ω range.)

<Checking method>

Change the polarity of the meter alternately at the inverter terminals R (L_1), S (L_2), T (L_3), U, V, W, P (+) and N (–), and check for continuity.

> Note: 1. Before measurement, check that the smoothing capacitor is discharged.
> 2. At the time of continuity, the measured value is several to several ten's-of ohms depending on the number of modules, number of parallel modules, circuit tester type, etc. If all measured values are almost the same, the modules are without fault.

<Module device numbers and terminals to be checked>

		Tester Polarity		Measured Value		Tester Polarity		Measured Value
		⊕	⊖			⊕	⊖	
Converter module	D1	R (L_1)	P (+)	Discontinuity	D4	R (L_1)	N (–)	Continuity
		P (+)	R (L_1)	Continuity		N (–)	R (L_1)	Discontinuity
	D2	S (L_2)	P (+)	Discontinuity	D5	S (L_2)	N (–)	Continuity
		P (+)	S (L_2)	Continuity		N (–)	S (L_2)	Discontinuity
	D3	T (L_3)	P (+)	Discontinuity	D6	T (L_3)	N (–)	Continuity
		P (+)	T (L_3)	Continuity		N (–)	T (L_3)	Discontinuity
Inverter module	TR1	U	P (+)	Discontinuity	TR4	U	N (–)	Continuity
		P (+)	U	Continuity		N (–)	U	Discontinuity
	TR3	V	P (+)	Discontinuity	TR6	V	N (–)	Continuity
		P (+)	V	Continuity		N (–)	V	Discontinuity
	TR5	W	P (+)	Discontinuity	TR2	W	N (–)	Continuity
		P (+)	W	Continuity		N (–)	W	Discontinuity

(Assumes the use of an analog meter.)

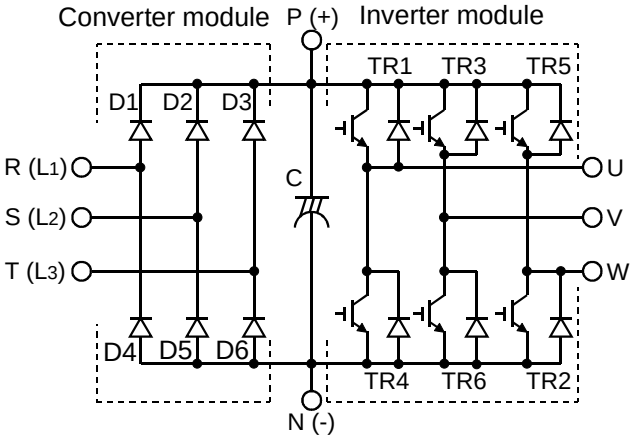

Note: The FR-E510W-0.1K to 0.75K-NA do not have T (L_3), D3 and D6.

5.3.7 Replacement of parts

The inverter consists of many electronic parts such as semiconductor devices.
The following parts may deteriorate with age because of their structural or physical characteristics, leading to reduced performance or failure of the inverter. For preventive maintenance, the parts must be changed periodically.

Part Name	Standard Replacement Interval	Description
Cooling fan	2 to 3 years	Change (as required)
Smoothing capacitor in main circuit	5 years	Change (as required)
Smoothing capacitor on control board	5 years	Change the board (as required).

Note: For part replacement, contact the nearest Mitsubishi FA center.

(1) Cooling fan

The cooling fan cools heat-generating parts such as the main circuit semiconductor devices. The life of the cooling fan bearing is usually 10,000 to 35,000 hours. Hence, the cooling fan must be changed every 2 to 3 years if the inverter is run continuously. When unusual noise and/or vibration is noticed during inspection, the cooling fan must be changed immediately.

Inverter Model No.	Fan Type
FR-E520-0.75K-NA	MMF-04C24DS BKO-CA1382H01
FR-E520-1.5K, 2.2K, 3.7K-NA	MMF-06D24DS BKO-C2461H07
FR-E520-5.5K, 7.5K-NA	MMF-06D24ES BKO-CA1027H08
FR-E540-1.5K, 2.2K, 3.7K-NA	MMF-06D24ES-FC4 BKO-CA1027H09
FR-E540-5.5K, 7.5K-NA	MMF-06D24ES FC5 BKO-CA1027H10

● **Removal**

(For the FR-E520-0.75K to 7.5K-NA)

1) Remove the wiring cover. (Refer to page 7.)
2) Unplug the fan connector.
   The cooling fan is plugged into the cooling fan connector beside the inverter terminal block.
   Unplug the connector and separate the inverter from the cooling fan.
3) Remove the cooling fan cover.
   Push the cover in the direction of arrow and pull it down.
4) Remove the cooling fan and cooling fan cover.
   The cooling fan is secured by the fixing catches.
   Disengage the fixing catches to remove the cooling fan and cooling fan cover.

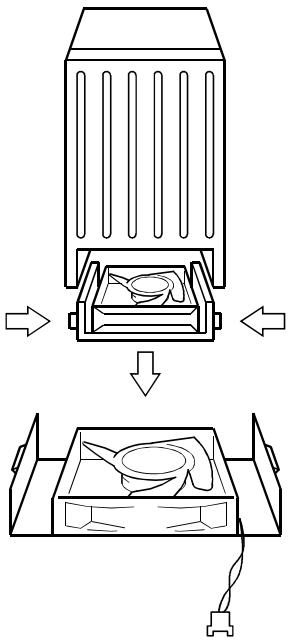

(For the FR-E540-1.5K to 7.5K-NA)

1) Remove the front cover
   (Refer to page 5.).

2) Unplug the fan connector.
   The cooling fan is connected to the cooling fan connector beside the main circuit terminal block of the inverter. Unplug the connector.

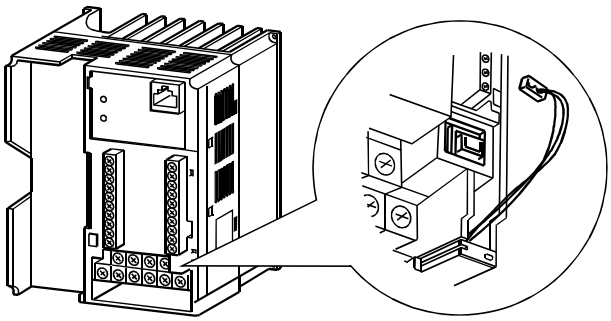

3) Remove the inverter and cooling fan.
   Push in the direction of arrow A and pull out in the direction of arrow B.

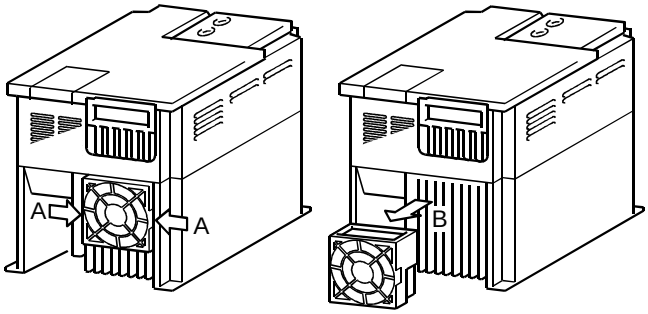

4) Remove the cooling fan and cooing fan cover.
   The cooling fan is secured by the fixing catches.
   You can remove the cooling fan and cooling fan cover by disengaging the fixing catches.

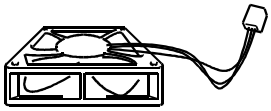

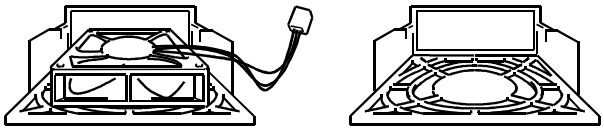

● **Reinstallation**

(For the FR-E520-0.75K to 7.5K-NA)

1) After confirming the orientation of the fan, reinstall the fan to the cover so that the arrow on the left of "AIR FLOW" faces in the opposite direction of the fan cover.
   Note: If the air flow is set in the wrong direction, the inverter life can be shorter.
2) Reinstall the fan cover to the inverter.
   Run the cable through the wiring groove to prevent it from being caught between the chassis and cover.
3) Reconnect the cable to the connector.
4) Reinstall the wiring cover.

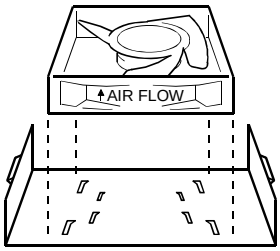

(For 5.5K, 7.5K-NA)

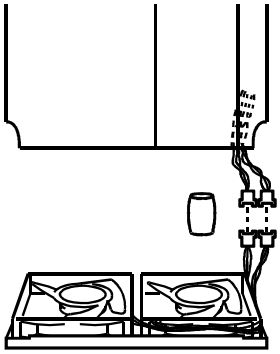

*Wire the cables using care so that they are not caught by the cooling fan.

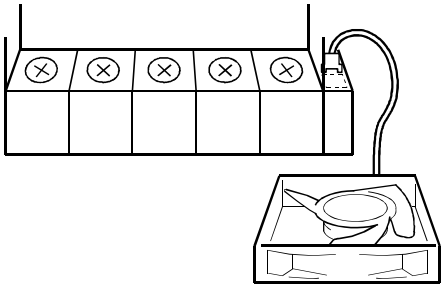

(For the FR-E540-1.5K to 7.5K-NA)

1) After confirming the orientation of the fan, reinstall the fan to the cover so that the arrow on the left of "AIR FLOW" faces in the opposite direction of the fan cover.
   Note: If the air flow is set in the wrong direction, the inverter life can be shorter.

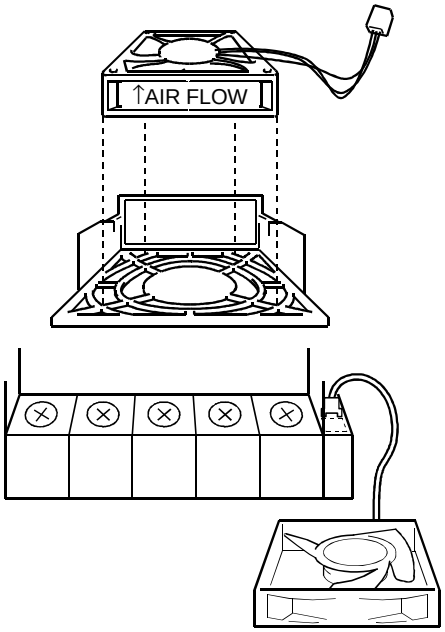

2) Reinstall the fan cover to the inverter.
   Run the cable through the wiring groove to prevent it from being caught between the chassis and cover.

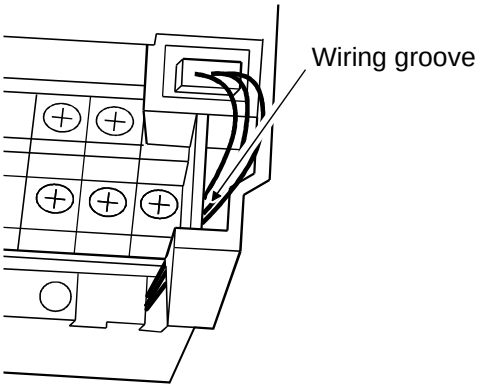

3) Reconnect the cable to the connector.

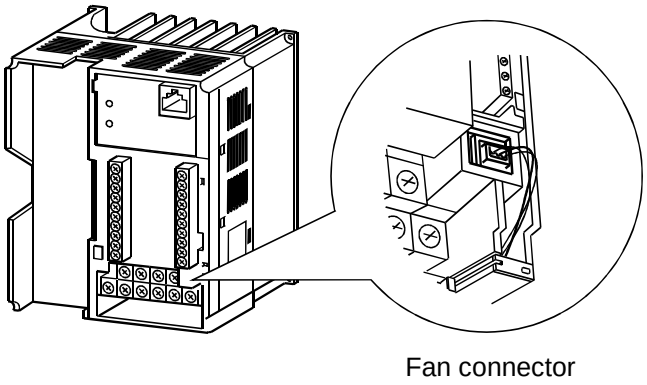

4) Reinstall the inverter front cover.

(2) Smoothing capacitors

A large-capacity aluminum electrolytic capacitor is used for smoothing the DC in the main circuit, and an aluminum electrolytic capacitor is also used for stabilizing the control power in the control circuit.

Their characteristics are adversely affected by ripple current, etc. When the inverter is operated in an ordinary, air-conditioned environment, change the capacitors about every 5 years. When 5 years have elapsed, the capacitors will deteriorate more rapidly. Check the capacitors at least every year (less than six months if the life will be expired soon). Check the following:

1) Case (side faces and bottom face for expansion)
2) Sealing plate (for remarkable warp and extreme crack)
3) Appearance, external cracks, discoloration, leakage.
   When the measured capacitance of the capacitor has reduced below 85% of the rating, change the capacitor.

5.3.8 Measurement of main circuit voltages, currents and powers

- **Measurement of voltages and currents**

Since the voltages and currents on the inverter power supply and output sides include harmonics, accurate measurement depends on the instruments used and circuits measured.
When instruments for commercial frequency are used for measurement, measure the following circuits using the instruments given on the next page.

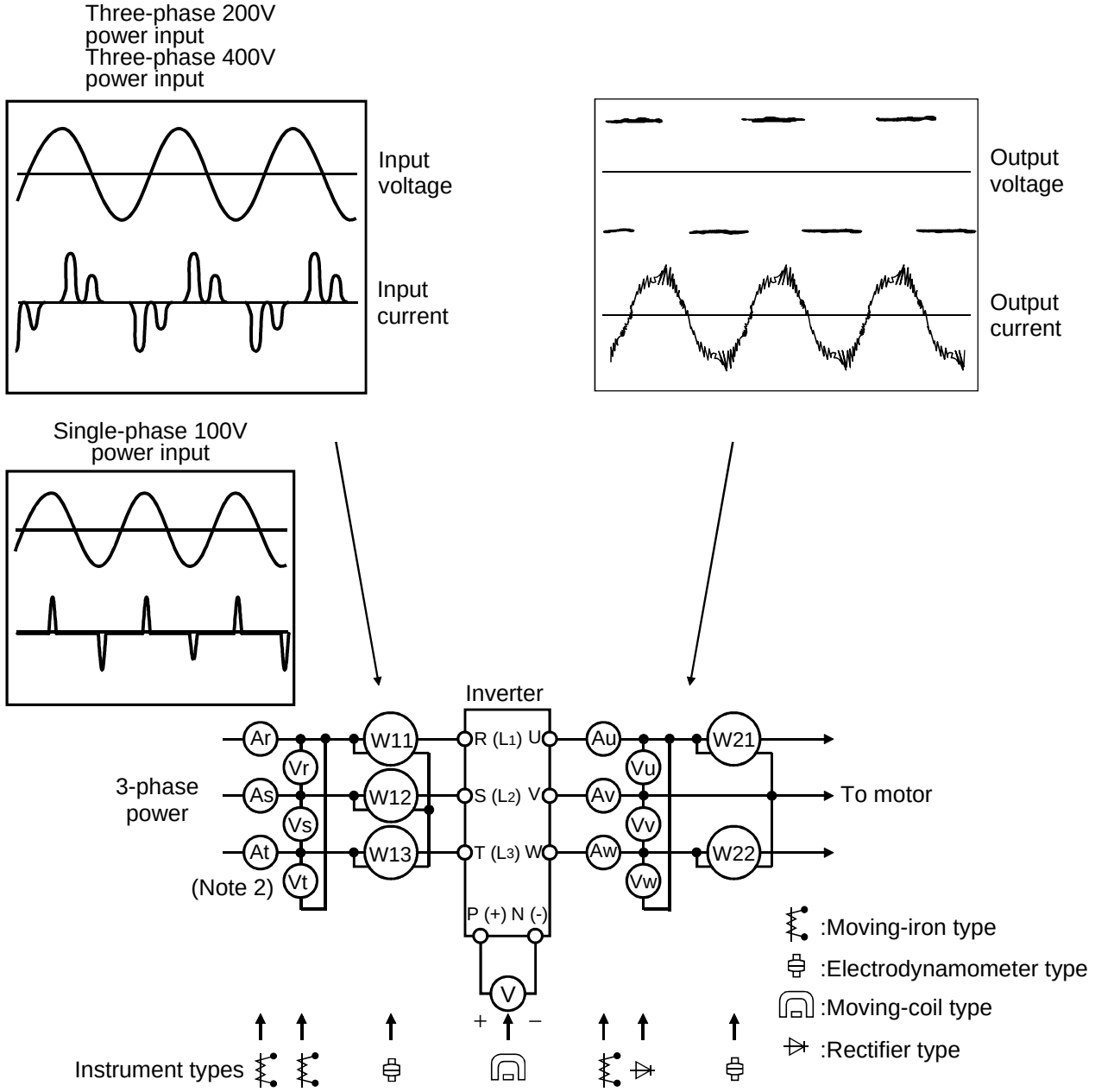

Typical Measuring Points and Instruments

Note: 1. Use FFT (Fast Fourier Transforms) to measure the output voltage accurately.
It cannot be measured accurately with a meter or general instrument.
2. For FR-E510W-0.1K to 0.75K-NA do not use At, As, Vt, Vs, W12 and W13.

Measuring Points and Instruments

Item	Measuring Point	Measuring Instrument	Remarks (Reference Measured Value)	
Power supply voltage (V1)	Across R-S (L_1-L_2), S-T (L_2-L_3) and T-R (L_3-L_1)	Moving-iron type AC voltmeter	Is the commercial power supply within permissible variation of AC voltage (refer to page 191).	
Power supply side current (I1)	R, S and T line currents (L_1, L_2 and L_3 line currents)	Moving-iron type AC ammeter		
Power supply side power (P1)	At R (L_1), S (L_2) and T (L_3), and across R-S (L_1-L_2), S-T (L_2-L_3) and T-R (L_3-L_1)	Electrodynamic type single-phase wattmeter	P1 = W11 + W12 + W13 (3-wattmeter method)	
Power supply side power factor (Pf1)	Calculate after measuring power supply voltage, power supply side current and power supply side power. [For three-phase power supply] $Pf1=\frac{P1}{\sqrt{3}V1\times I1}\times 100\%$ [For single-phase power supply] $Pf1=\frac{P1}{V1\times I1}\times 100\%$			
Output side voltage (V2)	Across U-V, V-W and W-U	(Note 1) (Cannot be measured by moving-iron type)	Difference between phases is within ±1% of maximum output voltage.	
Output side current (I2)	U, V and W line currents	Moving-iron type AC ammeter (Note 2)	Current should be equal to or less than rated inverter current. Difference between phases is 10% or lower.	
Output side power (P2)	At U, V and W, and across U-V and V-W	Electrodynamic type single-phase wattmeter	P2 = W21 + W22 2-wattmeter method (or 3-wattmeter method)	
Output side power factor (Pf2)	Calculate in similar manner to power supply side power factor. $Pf2=\frac{P2}{\sqrt{3}V2\times I2}\times 100\%$			
Converter output	Across P-N (+ - –)	Moving-coil type (such as tester)	Inverter LED display is lit. 1.35 × V1 Maximum 380V (760V) during regenerative operation	
Frequency setting signal	Across 2 (positive)-5	Moving-coil type (Meter, etc. may be used) (Internal resistance: 50kΩ or larger)	0 to 5V/0 to 10VDC	"5" is common.
	Across 4 (positive)-5		4 to 20mADC	
Frequency setting power supply	Across 10 (positive)-5		5VDC	
Frequency meter signal	Across FM (positive)-SD		Approximately 5VDC at maximum frequency (without frequency meter) 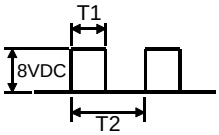 Pulse width T1: Adjusted with Pr. 900 Pulse cycle T2: Set with Pr. 55 (Valid for frequency monitoring only)	SD is common.
	Across AM (+)-5		Approximately 10DVC at maximum frequency (without frequency meter)	"5" is common.
Start signal Select signal	Across STF, STR, RH, RM, RL, MRS, RES-SD	Moving-coil type (Meter, etc. may be used) (Internal resistance: 50kΩ or larger)	20 to 30VDC when open. ON voltage: 1V or less	SD is common.
Reset	Across RES (positive)-SD			
Output stop	Across MRS (positive)-SD			
Alarm signal	Across A-C Across B-C	Moving-coil type (such as a meter)	Continuity check <Normal> <Fault> Across A-C: Discontinuity Continuity Across B-C: Continuity Discontinuity	

Note: 1. Use FFT to measure the output voltage accurately. It can not be measured accurately with a meter or general instrumentation.

2. If the carrier frequency exceeds 5kHz, do not use this instrument since using it may increase eddy-current loss produced in metal parts inside the instrument, leading to burnout.
In this case, use an approximate effective value type instrument.

* The value within the parentheses is for the 400V class.

CHAPTER 6
SPECIFICATIONS

This chapter provides the "specifications" of this product.
Always read the instructions before using the equipment

6.1 Standard Specifications 191

6.1 Standard Specifications

6.1.1 Model specifications

(1) 3-phase 200V power supply

Type FR-E520-□ -NA			0.1K	0.2K	0.4K	0.75K	1.5K	2.2K	3.7K	5.5K	7.5K
Applicable motor capacity (Note 1)		kW	0.1	0.2	0.4	0.75	1.5	2.2	3.7	5.5	7.5
		HP	1/8	1/4	1/2	1	2	3	5	7.5	10
Output	Rated capacity (kVA) (Note 2)		0.3	0.6	1.2	2.0	3.2	4.4	7.0	9.5	13.1
	Rated current (A) (Note 6)		0.8 (0.8)	1.5 (1.4)	3 (2.5)	5 (4.1)	8 (7)	11 (10)	17.5 (16.5)	24 (23)	33 (31)
	Overload capacity (Note 3)		150% 60s 200% 0.5s (inverse-time characteristics)								
	Voltage (Note 4)		Three phase, 200V to 240V 50Hz/60Hz								
Power supply	Rated input AC (DC) voltage, frequency		Three phase, 200V to 240V 50Hz/60Hz (280VDC, Note 7)								
	Permissible AC (DC) voltage fluctuation		170 to 264V 50Hz/60Hz (252 to 310VDC, Note 7)								
	Permissible frequency fluctuation		±5%								
	Power supply system capacity (kVA) (Note 5)		0.4	0.8	1.5	2.5	4.5	5.5	9	12	17
Protective structure (JEM1030)			Enclosed type (IP20)								
Cooling system			Self-cooling			Forced air cooling					
Approximate weight (kg (lbs))			0.6 (1.32)	0.6 (1.32)	0.8 (1.76)	1.0 (2.2)	1.7 (3.75)	1.7 (3.75)	2.2 (4.85)	4.4 (9.7)	4.9 (10.8)

Note: 1. The applicable motor capacity indicated is the maximum capacity applicable when a Mitsubishi 4-pole standard motor is used.

2. The rated output capacity indicated assumes that the output voltage is 230V.
3. The overload capacity indicated in % is the ratio of the overload current to the inverter's rated current. For repeated duty, allow time for the inverter and motor to return to or below the temperatures under 100% load.
4. The maximum output voltage cannot exceed the power supply voltage. The maximum output voltage may be set as desired below the power supply voltage. However, the crest value of the inverter output voltage remains unchanged from the DC bus voltage.
5. The power supply capacity changes with the values of the power supply side inverter impedances (including those of the input reactor and cables).
6. The rated output current in the parentheses applies when low acoustic noise operation is to be performed at the ambient temperature higher than 40°C (104°F) with the Pr. 72 (PWM frequency selection) value set to 2kHz or higher.
7. When using a DC power supply
   (1) The guideline for the power supply voltage fluctuation range is 280VDC ±10%, and usually use the power supply at or below 300VDC.
   (2) When DC power is switched on, a larger inrush current flows than in AC power. The number of power-on times should be minimized.
   (3) 300VDC must be reserved to make the torque characteristic equal to when AC power supply is used.

(2) 3-phase 400V power supply

Type FR-E540-□ -NA			0.4K	0.75K	1.5K	2.2K	3.7K	5.5K	7.5K
Applicable motor capacity (Note 1)		kW	0.4	0.75	1.5	2.2	3.7	5.5	7.5
		HP	1/2	1	2	3	5	7.5	10
Output	Rated capacity (kVA) (Note 2)		1.2	2.0	3.0	4.6	7.2	9.1	13.0
	Rated current (A) (Note 6)		1.6 (1.4)	2.6 (2.2)	4.0 (3.8)	6.0 (5.4)	9.5 (8.7)	12	17
	Overload capacity (Note 3)		150% 60s 200% 0.5s (inverse-time characteristics)						
	Voltage (Note 4)		Three phase, 380V to 480V 50Hz/60Hz						
Power supply	Rated input AC voltage, frequency		Three phase, 380V to 480V 50Hz/60Hz						
	Permissible AC voltage fluctuation		325 to 528 V 50Hz/60Hz						
	Permissible frequency fluctuation		Within ±5%						
	Power supply system capacity (kVA) (Note 5)		1.5	2.5	4.5	5.5	9	12	17
Protective structure (JEM1030)			Enclosed type (IP20)						
Cooling system			Self-cooling		Forced air cooling				
Approximate weight (kg (lbs))			1.9 (4.19)	1.9 (4.19)	2.0 (4.41)	2.1 (4.63)	2.1 (4.63)	3.8 (8.38)	3.8 (8.38)

Note: 1. The applicable motor capacity indicated is the maximum capacity applicable when a Mitsubishi 4-pole standard motor is used.
2. The rated output capacity indicated assumes that the output voltage is 440V.
3. The overload capacity indicated in % is the ratio of the overload current to the inverter's rated current. For repeated duty, allow time for the inverter and motor to return to or below the temperatures under 100% load.
4. The maximum output voltage cannot exceed the power supply voltage. The maximum output voltage may be set as desired below the power supply voltage. However, the crest value of the inverter output voltage remains unchanged from the DC bus voltage.
5. The power supply capacity changes with the values of the power supply side inverter impedances (including those of the input reactor and cables).
6. The rated output current in the parentheses applies when low acoustic noise operation is to be performed at the ambient temperature higher than 40°C (104°F) with the Pr. 72 (PWM frequency selection) value set to 2kHz or higher.

(3) Single-phase 100V power supply

Type FR-E510W- ☐ K-NA			0.1K	0.2K	0.4K	0.75K
Applicable motor capacity (Note 1)		kW	0.1	0.2	0.4	0.75
		HP	1/8	1/4	1/2	1
Output	Rated capacity (kVA) (Note 2)		0.3	0.6	1.2	2
	Rated output current (A) (Note 7)		0.8 (0.8)	1.5 (1.4)	3.0 (2.5)	5.0 (4.1)
	Overload capacity (Note 3)		150% 60s 200% 0.5s (inverse-time characteristics)			
	Rated output voltage		Three phase, 200V to 230V 50Hz/60Hz (Note 4, 8)			
Power supply	Rated input AC voltage, frequency		Single phase, 100V to 115V 50Hz/60Hz			
	Permissible AC voltage fluctuation		Single phase, 90V to 132V 50Hz/60Hz			
	Permissible frequency fluctuation		Within ±5%			
	Power supply capacity (kVA) (Note 5)		0.5	0.9	1.5	2.5
Protective structure (JEM1030)			Enclosed type (IP20)			
Cooling system			Self-cooling			
Approximate weight (kg(lbs))			0.6 (1.32)	0.6 (1.32)	1.0 (2.2)	1.7 (3.75)

Note: 1. The applicable motor capacity indicated is the maximum capacity applicable when a Mitsubishi 4-pole standard motor is used.
Normally, the rated current (at 50Hz) of the motor applied should not exceed the rated current.

2. The rated output capacity indicated assumes that the output voltage is 230V.
3. The overload capacity indicated in % is the ratio of the overload current to the inverter's rated output current. For repeated duty, allow time for the inverter and motor to return to or below the temperatures under 100% load.
4. For single-phase 100V power input, the output voltage provided cannot be twice or more of the power supply voltage. The crest value of the inverter output voltage remains unchanged from the DC bus voltage.
5. The power supply capacity changes with the values of the power supply side inverter impedances (including those of the input reactor and cables). Use the power supply capacity larger than the indicated.
6. Load applied to the motor will reduce the output voltage about 10 to 15%. When using a general-purpose motor, it must be used under reduced load.
7. The rated output current in the parentheses applies when low acoustic noise operation is to be performed at the ambient temperature higher than 40°C with the Pr. 72 (PWM frequency selection) value set to 2kHz or higher.
8. For single-phase 100V power input, the application of motor load reduces the output voltage about 10 to 15%. Therefore, the load must be reduced when a general-purpose motor is used.

6.1.2 Common specifications

Control specifications	Control system		Soft-PWM control/high carrier frequency PWM control can be selected. V/F control or general-purpose magnetic flux vector control can be selected.	
	Output frequency range		0.2 to 400Hz (starting frequency variable between 0 and 60Hz)	
	Frequency setting resolution	Analog input	Across terminals 2-5: 1/500 of maximum set frequency (5VDC input), 1/1000 (10VDC, 4-20mADC input)	
		Digital input	0.01Hz (less than 100Hz), 0.1Hz (100Hz or more) when digital setting is made using the control panel	
	Frequency accuracy	Analog input	Within ±0.5% of maximum output frequency (25°C ±10°C (77°F±18°F))	
		Digital input	Within 0.01% of set output frequency when setting is made from control panel.	
	Voltage/frequency characteristic		Base frequency set as required between 0 and 400Hz. Constant torque or variable torque pattern can be selected.	
	Starting torque		150% or more (at 1Hz), 200% or more (at 3Hz) when general-purpose magnetic flux vector control or slip compensation is selected	
	Torque boost		Manual torque boost, 0 to 30% may be set.	
	Acceleration/deceleration time setting		0.01, 0.1 to 3600 s (acceleration and deceleration can be set individually), linear or S-pattern acceleration/deceleration mode can be selected.	
	Braking torque	Regene-rative (Note 3)	0.1K, 0.2K ... 150%, 0.4K, 0.75K ... 100%, 1.5K ... 50%, 2.2K, 3.7K, 5.5K, 7.5K ... 20%	
		DC injection brake	Operation frequency (0 to 120Hz), operation time (0 to 10 s), operation voltage (0 to 30%) variable	
	Current stall prevention operation level		Operation current level can be set (0 to 200% variable), presence or absence can be selected.	
	Voltage stall prevention operation level		Operation level is fixed, presence or absence can be selected.	
	Fast-response current limit level		Operation level is fixed, presence or absence can be selected.	
	Input signals	Frequency setting signal	Analog input	0 to 5VDC, 0 to 10VDC, 4 to 20mADC.	
			Digital input	Entered from control panel optional (FR-PA02-02).	
		Start signal		Forward rotation and reverse rotation, start signal self-holding input (3-wire input) selectable.	
		Alarm reset		Used to reset alarm output provided when protective function is activated.	
		Multi-speed selection		Up to 15 speeds can be selected. (Each speed can be set between 0 and 400Hz, running speed can be changed during operation from the control panel.)	Use Pr. 180 to Pr. 183 for selection.
		Second function selection		Used to select second functions (acceleration time, deceleration time, torque boost, base frequency, electronic overcurrent protection).	
		Output stop		Instantaneous shut-off of inverter output (frequency, voltage).	
		Current input selection		Used to select input of frequency setting signal 4 to 20mADC (terminal 4).	
		External thermal relay input		Thermal relay contact input for use when the inverter is stopped by the external thermal relay.	
		PU operation-external operation switching		Used to switch between PU operation and external operation from outside the inverter.	
		V/F-general-purpose magnetic flux switching		Used to switch between V/F control and general-purpose magnetic flux vector control from outside the inverter.	

Control specifications	Operation functions			Maximum/minimum frequency setting, frequency jump operation, external thermal relay input selection, automatic restart operation after instantaneous power failure, forward/reverse rotation prevention, slip compensation, operation mode selection, offline auto tuning function, PID control, computer link operation (RS-485)
	Output signals	Operating status		2 open collector output signals can be selected from inverter running, up to frequency, frequency detection, overload alarm, zero current detection, output current detection, PID upper limit, PID lower limit, PID forward/reverse rotation, operation ready, minor fault and alarm, and 1 contact output (230VAC 0.3A, 30VDC 0.3A) can be selected.
		For meter		1 signal can be selected from output frequency, output current and output voltage. Pulse train output (1440 pulses/s/full scale).
Display	Control panel display		Operating status	Output voltage, output current, set frequency, running.
			Alarm definition	Alarm definition is displayed when protective function is activated. 4 alarm definitions are stored.
	LED display			Power application (POWER), Alarm (ALARM)
Protective/alarm functions				Overcurrent shut-off (during acceleration, deceleration, constant speed), regenerative overvoltage shut-off, undervoltage (Note 1), instantaneous power failure (Note 1), overload shut-off (electronic overcurrent protection), brake transistor alarm, output short circuit, stall prevention, brake resistor overheat protection, fin overheat, fan failure (Note 4), parameter error, PU disconnection, output phase failure protection, ground fault over current protection (400V class), starting-time ground fault overcurrent protection (other than 400V class) .
Environment	Ambient temperature			-10°C to +50°C (14°F to 122°F) (non-freezing)
	Ambient humidity			90%RH or less (non-condensing)
	Storage temperature (Note 2)			-20°C to +65°C (-4°F to 149°F)
	Ambience			Indoors (no corrosive and flammable gases, oil mist, dust and dirt.)
	Altitude, vibration			Maximum 1000m (3280.80 feet) above sea level for standard operation. After that derate by 3% for every extra 500m (1640.40 feet) up to 2500m (8202.00 feet) (91%). 5.9m/s^2 or less (conforming to JIS C 0911)

Note: 1. When undervoltage or instantaneous power failure has occurred, alarm display or alarm output is not provided but the inverter itself is protected. Overcurrent, regenerative overvoltage or other protection may be activated at power restoration according to the operating status (load size, etc.)
2. Temperature applicable for a short period in transit, etc.
3. The braking torque indicated is a short-duration average torque (which varies with motor loss) when the motor alone is decelerated from 60Hz in the shortest time and is not a continuous regenerative torque. When the motor is decelerated from the frequency higher than the base frequency, the average deceleration torque will reduce. Since the inverter does not contain a brake resistor, use the optional brake resistor when regenerative energy is large. (The optional brake resistor cannot be used with 0.1K and 0.2K.) A brake unit (BU) may also be used.
4. Not provided for the FR-E540-0.4K, 0.75K-NA, FR-E520-0.1K to 0.4K-NA and FR-E510W-0.1K to 0.75K-NA which are not equipped with a cooling fan.

6.1.3 Outline drawings

(1) 200V class, 100V class

- **FR-E520-0.1K-NA, 0.2K-NA, 0.4K-NA, 0.75K-NA**
- **FR-E510W-0.1K-NA, 0.2K-NA, 0.4K-NA**

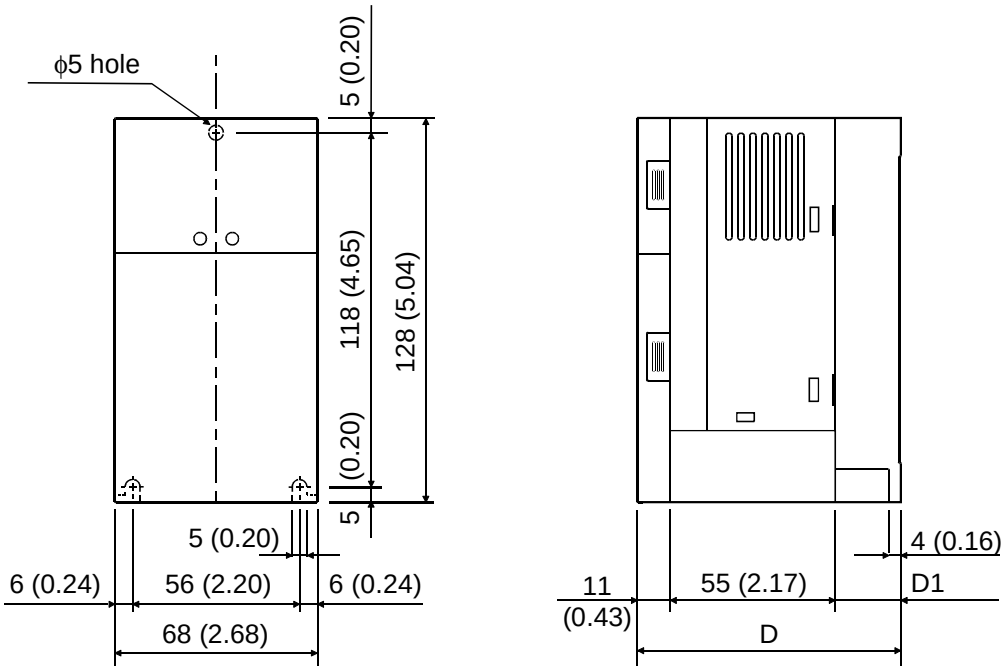

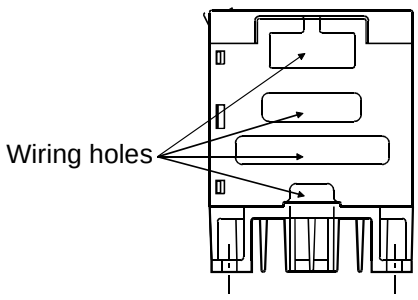

Capacity	D	D1	D2
FR-E520-0.1K-NA	76 (2.99)	10 (0.39)	55 (2.17)
FR-E520-0.2K-NA	76 (2.99)	10 (0.39)	55 (2.17)
FR-E520-0.4K-NA	108 (4.25)	42 (1.65)	55 (2.17)
FR-E520-0.75K-NA	128 (5.04)	62 (2.44)	55 (2.17)
FR-E510W-0.1K-NA	76 (2.99)	10 (0.39)	55 (2.17)
FR-E510W-0.2K-NA	106 (4.17)	10 (0.39)	85 (3.35)
FR-E510W-0.4K-NA	138 (5.43)	42 (1.65)	85 (3.35)

Note: FR-E520-0.75K-NA is provided with cooling fan.

(Unit: mm (inches))

- **FR-E520-1.5K-NA, 2.2K-NA**
- **FR-E510W-0.75K-NA**

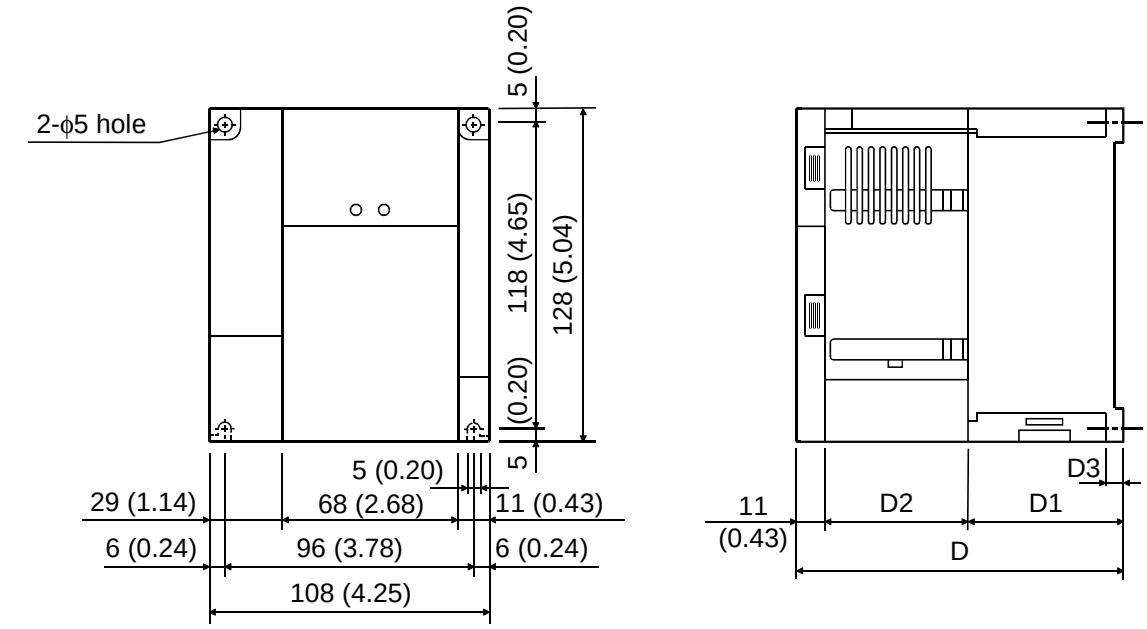

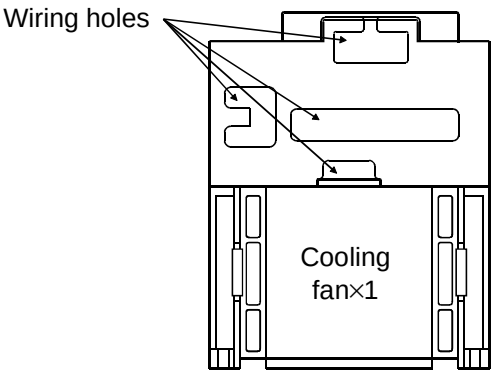

Inverter Model	D	D1	D2	D3
FR-E520-1.5K-NA, 2.2K-NA	131 (5.16)	65 (2.56)	55 (2.17)	8 (0.31)
FR-E510W-0.75K-NA	155 (6.10)	59 (2.32)	85 (3.35)	5 (0.20)

Note: FR-E510W-0.75K-NA is not equipped with a cooling fan.

(Unit: mm (inches))

● **FR-E520-3.7K-NA**

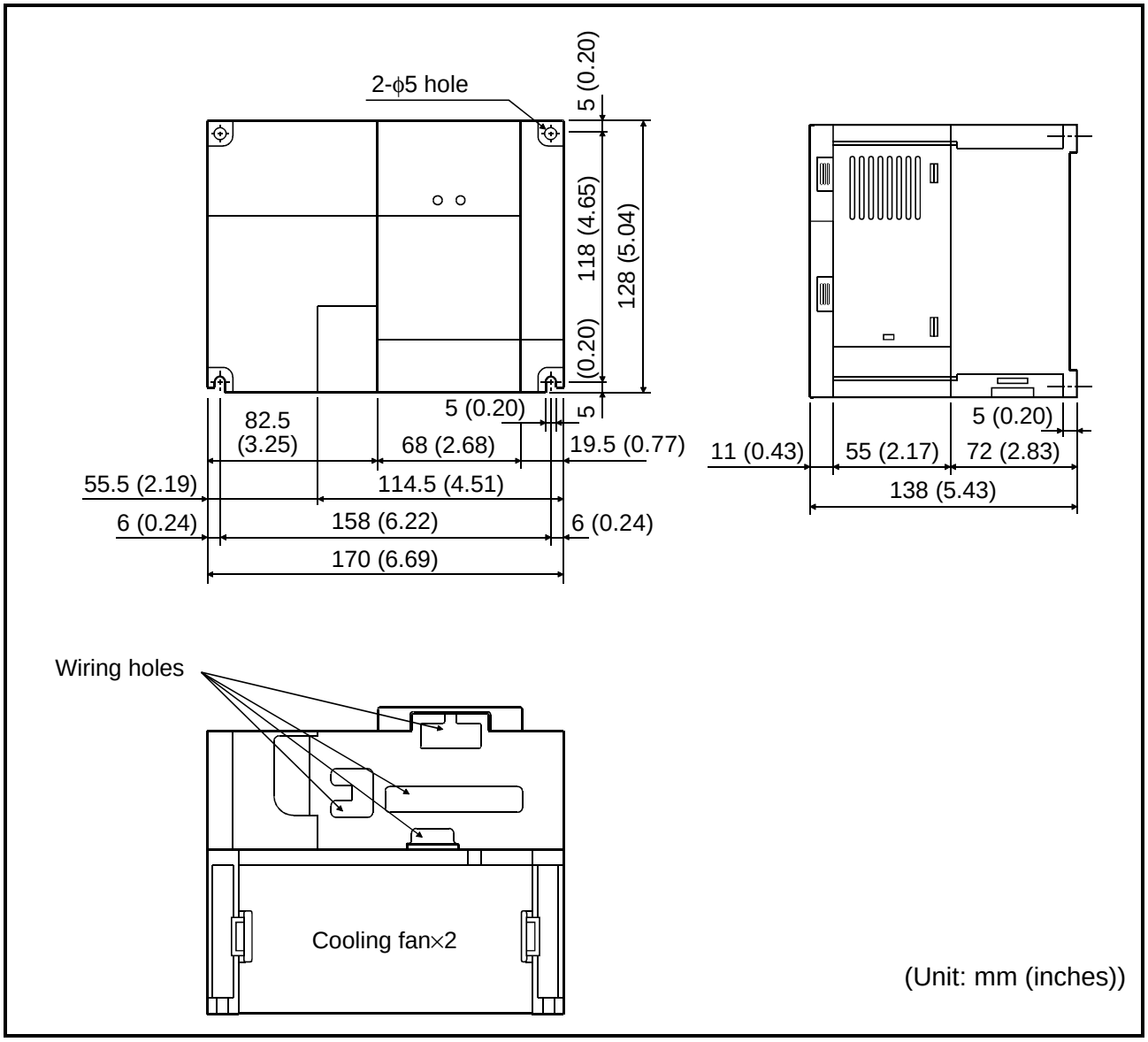

● **FR-E520-5.5K-NA, 7.5K-NA**

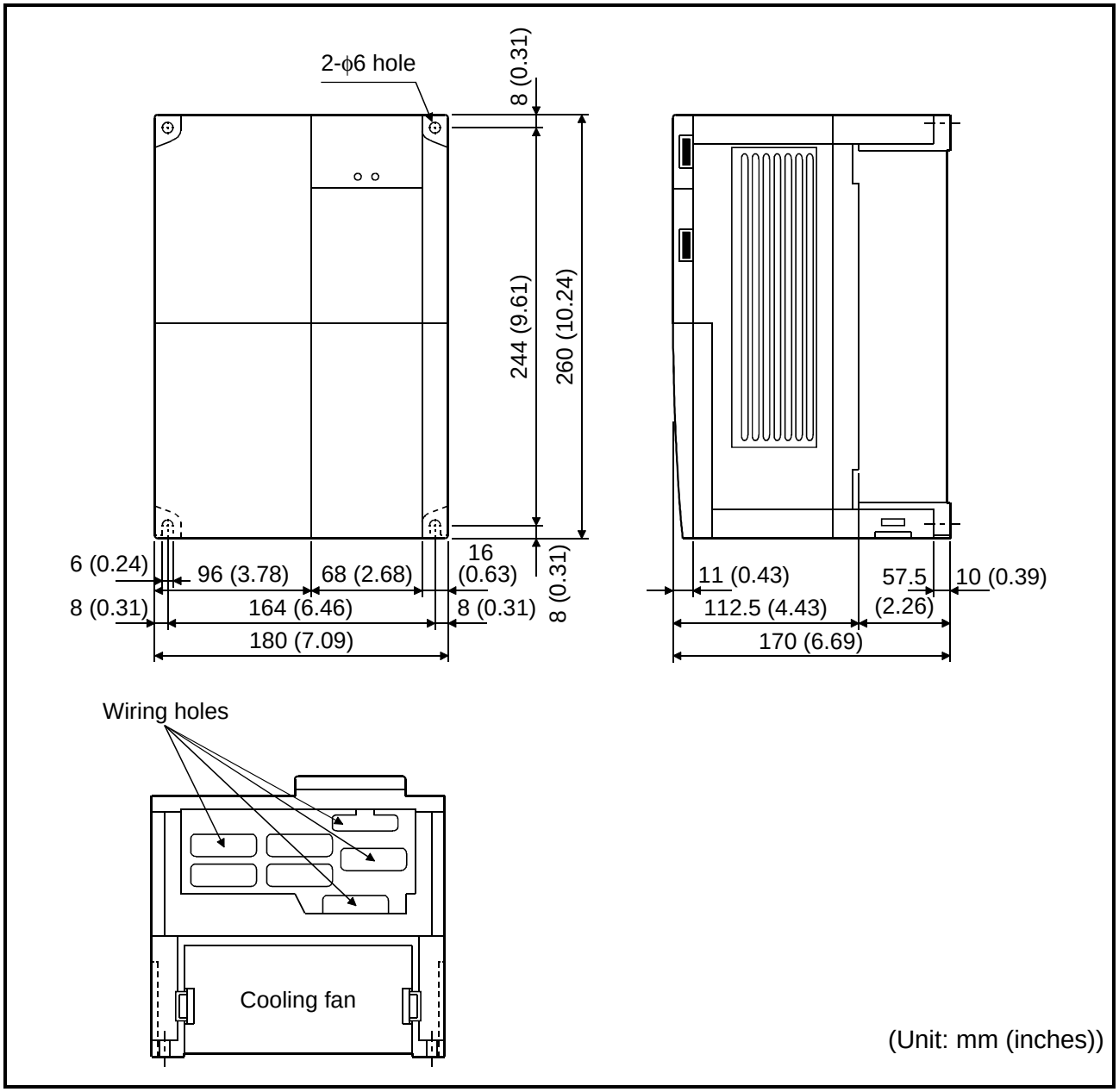

(2) 400V class

- **FR-E540-0.4K, 0.75K, 1.5K, 2.2K, 3.7K-NA**

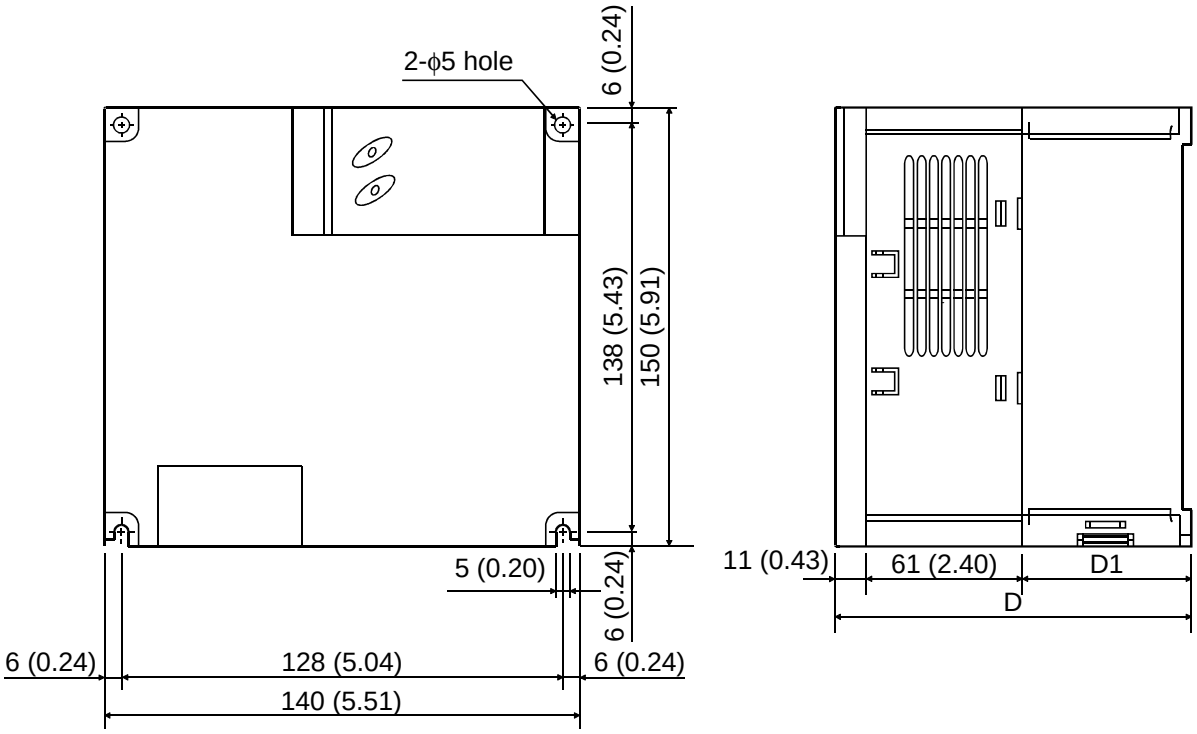

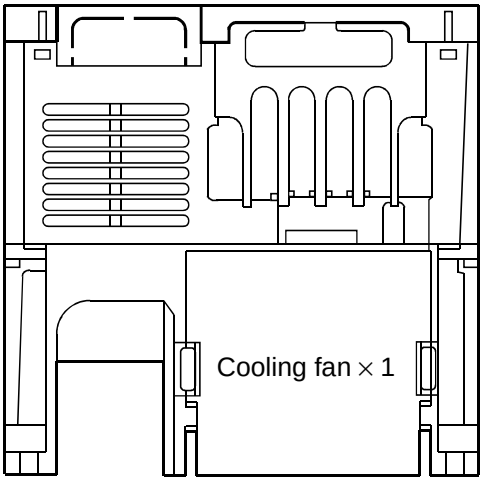

Inverter Type	D	D1
FR-E540-0.4K, 0.75K-NA	116 (4.57)	44 (1.73)
FR-E540-1.5K to 3.7K-NA	136 (5.35)	64 (2.52)

Note: There is no cooling fan in the FR-E540-0.4K and 0.75K-NA

(Unit: mm (inches))

● **FR-E540-5.5K, 7.5K-NA**

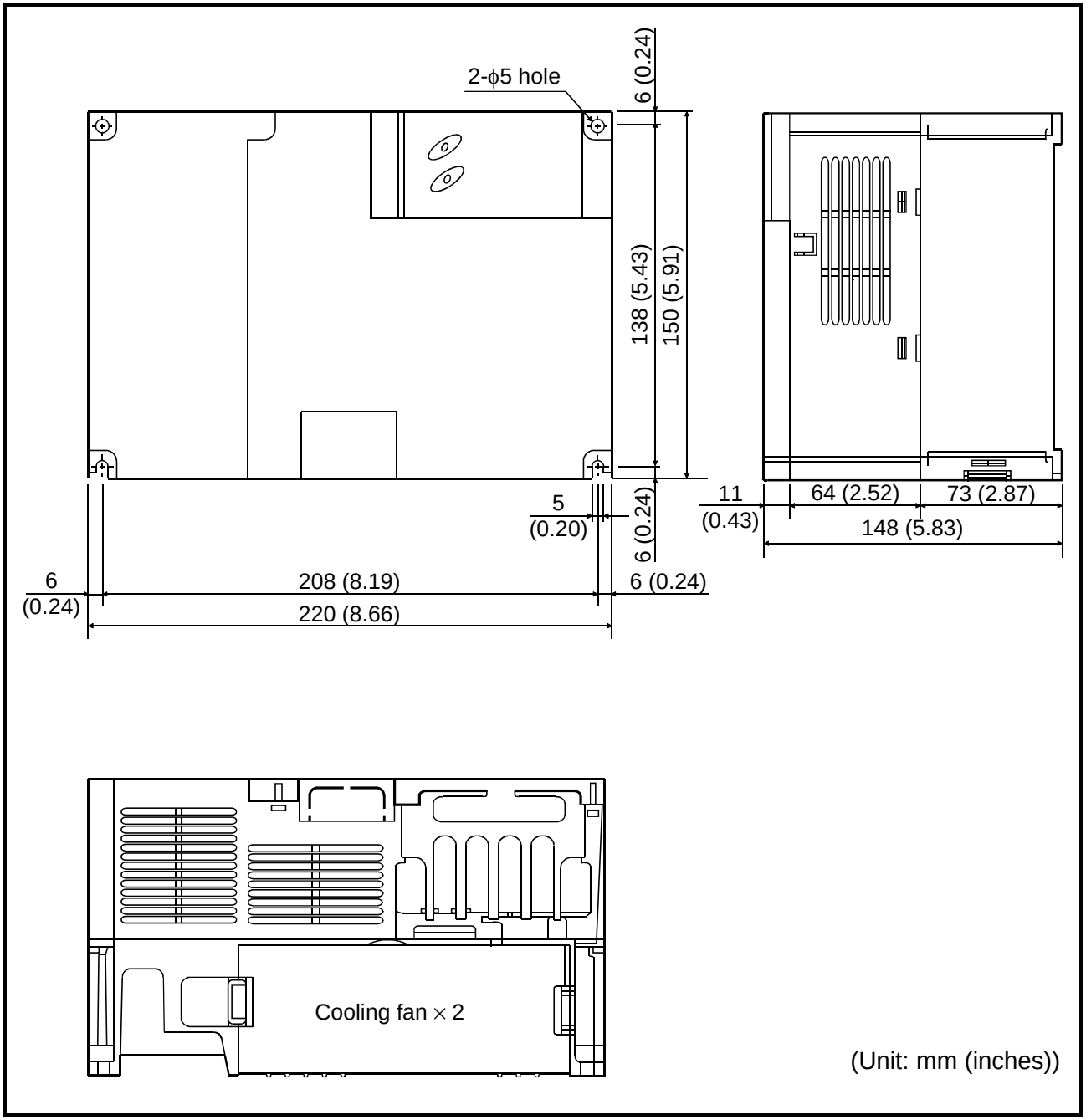

APPENDIX

This chapter provides "supplementary information" for use of this product.
Always read the instructions before using the equipment.

Appendix 1 Data Code List 202

APPENDIX 1 Data Code List

Func-tion	Parameter Number	Name	Data Code		Link Parameter Extension Setting (Data Code 7F/FF)
			Read	Write	
Basic functions	0	Torque boost	00	80	0
	1	Maximum frequency	01	81	0
	2	Minimum frequency	02	82	0
	3	Base frequency	03	83	0
	4	Multi-speed setting (high speed)	04	84	0
	5	Multi-speed setting (middle speed)	05	85	0
	6	Multi-speed setting (low speed)	06	86	0
	7	Acceleration time	07	87	0
	8	Deceleration time	08	88	0
	9	Electronic thermal O/L relay	09	89	0
Standard operation functions	10	DC injection brake operation frequency	0A	8A	0
	11	DC injection brake operation time	0B	8B	0
	12	DC injection brake voltage	0C	8C	0
	13	Starting frequency	0D	8D	0
	14	Load pattern selection	0E	8E	0
	15	Jog frequency	0F	8F	0
	16	Jog acceleration/deceleration time	10	90	0
	18	High-speed maximum frequency	12	92	0
	19	Base frequency voltage	13	93	0
	20	Acceleration/deceleration reference frequency	14	94	0
	21	Acceleration/deceleration time increments	15	95	0
	22	Stall prevention operation level	16	96	0
	23	Stall prevention operation level compensation factor at double speed	17	97	0
	24	Multi-speed setting (speed 4)	18	98	0
	25	Multi-speed setting (speed 5)	19	99	0
	26	Multi-speed setting (speed 6)	1A	9A	0
	27	Multi-speed setting (speed 7)	1B	9B	0
	29	Acceleration/deceleration pattern	1D	9D	0
	30	Regenerative function selection	1E	9E	0
	31	Frequency jump 1A	1F	9F	0
	32	Frequency jump 1B	20	A0	0
	33	Frequency jump 2A	21	A1	0
	34	Frequency jump 2B	22	A2	0
	35	Frequency jump 3A	23	A3	0
	36	Frequency jump 3B	24	A4	0
	37	Speed display	25	A5	0
	38	Frequency at 5V (10V) input	26	A6	0
	39	Frequency at 20mA input	27	A7	0

Func-tion	Parameter Number	Name	Data Code		Link Parameter Extension Setting (Data Code 7F/FF)
			Read	Write	
Output terminal functions	41	Up-to-frequency sensitivity	29	A9	0
	42	Output frequency detection	2A	AA	0
	43	Output frequency detection for reverse rotation	2B	AB	0
Second functions	44	Second acceleration/deceleration time	2C	AC	0
	45	Second deceleration time	2D	AD	0
	46	Second torque boost	2E	AE	0
	47	Second V/F (base frequency)	2F	AF	0
	48	Second electronic overcurrent protection	30	B0	0
Display functions	52	Control panel/PU main display data selection	34	B4	0
	54	FM terminal function selection	36	B6	0
	55	Frequency monitoring reference	37	B7	0
	56	Current monitoring reference	38	B8	0
Automatic restart functions	57	Restart coasting time	39	B9	0
	58	Restart cushion time	3A	BA	0
Additional function	59	Remote setting function selection	3B	BB	0
Operation selection functions	60	Shortest acceleration/deceleration mode	3C	BC	0
	61	Reference I for intelligent mode	3D	BD	0
	62	Ref. I for intelligent mode accel	3E	BE	0
	63	Ref. I for intelligent mode decel	3F	BF	0
	65	Retry selection	41	C1	0
	66	Stall prevention operation level reduction starting frequency	42	C2	0
	67	Number of retries at alarm occurrence	43	C3	0
	68	Retry waiting time	44	C4	0
	69	Retry count display erasure	45	C5	0
	70	Special regenerative brake duty	46	C6	0
	71	Applied motor	47	C7	0
	72	PWM frequency selection	48	C8	0
	73	0-5V/0-10V selection	49	C9	0
	74	Filter time constant	4A	CA	0
	75	Reset selection/disconnected PU detection/PU stop selection	4B	CB	0
	77	Parameter write disable selection	4D	CD	0
	78	Reverse rotation prevention selection	4E	CE	0
	79	Operation mode selection	4F	CF	0
General-purpose magnetic flux vector control	80	Motor capacity	50	D0	0
	82	Motor exciting current	52	D2	0
	83	Rated motor voltage	53	D3	0
	84	Rated motor frequency	54	D4	0
	90	Motor constant (R1)	5A	DA	0
	96	Auto-tuning setting/status	60	E0	0

Func-tion	Parameter Number	Name	Data Code		Link Parameter Extension Setting (Data Code 7F/FF)
			Read	Write	
Communication functions	117	Station number	11	91	1
	118	Communication speed	12	92	1
	119	Stop bit length	13	93	1
	120	Parity check presence/absence	14	94	1
	121	Number of communication retries	15	95	1
	122	Communication check time interval	16	96	1
	123	Waiting time setting	17	97	1
	124	CR·LF presence/absence selection	18	98	1
PID control	128	PID action selection	1C	9C	1
	129	PID proportional band	1D	9D	1
	130	PID integral time	1E	9E	1
	131	Upper limit	1F	9F	1
	132	Lower limit	20	A0	1
	133	PID action set point for PU operation	21	A1	1
	134	PID differential time	22	A2	1
Additional function	145	Parameter unit language switch over	2D	AD	2
	146	Parameter set by manufacture. Do not set.			
Current detection	150	Output current detection level	32	B2	1
	151	Output current detection period	33	B3	1
	152	Zero current detection level	34	B4	1
	153	Zero current detection period	35	B5	1
Sub function	156	Stall prevention operation selection	38	B8	1
	158	AM terminal function selection	3A	BA	1
Additional function	160	User group read selection	00	80	2
Initial monitor	171	Actual operation hour meter clear	0B	8B	2
User functions	173	User group 1 registration	0D	8D	2
	174	User group 1 deletion	0E	8E	2
	175	User group 2 registration	0F	8F	2
	176	User group 2 deletion	10	90	2
Terminal assignment functions	180	RL terminal function selection	14	94	2
	181	RM terminal function selection	15	95	2
	182	RH terminal function selection	16	96	2
	183	MRS terminal function selection	17	97	2
	190	RUN terminal function selection	1E	9E	2
	191	FU terminal function selection	1F	9F	2
	192	A, B, C terminal function selection	20	A0	2

Func-tion	Parameter Number	Name	Data Code		Link Parameter Extension Setting (Data Code 7F/FF)
			Read	Write	
Multi-speed operation	232	Multi-speed setting (speed 8)	28	A8	2
	233	Multi-speed setting (speed 9)	29	A9	2
	234	Multi-speed setting (speed 10)	2A	AA	2
	235	Multi-speed setting (speed 11)	2B	AB	2
	236	Multi-speed setting (speed 12)	2C	AC	2
	237	Multi-speed setting (speed 13)	2D	AD	2
	238	Multi-speed setting (speed 14)	2E	AE	2
	239	Multi-speed setting (speed 15)	2F	AF	2
Sub functions	240	Soft-PWM setting	30	B0	2
	244	Cooling fan operation selection	34	B4	2
	245	Rated motor slip	35	B5	2
	246	Slip compensation response time	36	B6	2
	247	Constant-output region slip compensation selection	37	B7	2
	249	Ground fault detection at start	39	B9	2
Stop selection function	250	Stop selection	3A	BA	2
Additional function	251	Output phase failure protection selection	3B	BB	2
Computer link function	338*	Operation command right	26	A6	3
	339*	Speed command right	27	A7	3
	340*	Link start mode selection	28	A8	3
	342 (400V class only)	E^2PROM write selection	2A	AA	3
Calibration functions	900	FM terminal calibration	5C	DC	1
	901	AM terminal calibration	5D	DD	1
	902	Frequency setting voltage bias	5E	DE	1
	903	Frequency setting voltage gain	5F	DF	1
	904	Frequency setting current bias	60	E0	1
	905	Frequency setting current gain	61	E1	1
	990	Buzzer beep control	5A	DA	9
	991	LCD contrast	5B	DB	9

* Only 400V class fitted with FR-E5NC

REVISIONS

*The manual number is given on the bottom left of the back cover.

Print Date	*Manual Number	Revision
Jul., 1998	IB(NA)-66866-A	First edition
Mar., 1999	IB(NA)-66866-B	Additions • Three-phase 400V power input specifications
May, 1999	IB(NA)-66866-C	Additions • Single-phase 100V power input specifications
May, 2000	IB(NA)-66866-D	Modifications • Alarm indications (E. 6, E. 7) • Control circuit terminal screw tightening torque • Instructions for compliance with U.S. and Canadian Electrical Codes
Nov., 2000	IB(NA)-66866-E	Additions • Pr. 251 "output phase failure protection selection" • Pr. 342 "E^2PROM write selection" (400V class only) Modifications • Instructions for compliance with U.S. and Canadian Electrical Codes