MITSUBISHI ELECTRIC

GRAPHIC OPERATION TERMINAL

GOT2000

GOT2000 Series Connection Manual (Non-Mitsubishi Electric Products 2) For GT Works3 Version1

-GT27 model
-GT25 model
-GT25 open frame model
-GT25 wide model
-GT25 rugged model
-GT23 model
-GT21 model
-GT21 wide model

SAFETY PRECAUTIONS

(Always read these precautions before using this equipment.)

Before using this product, please read this manual and the relevant manuals introduced in this manual carefully and pay full attention to safety to handle the product correctly.

The precautions given in this manual are concerned with this product.

In this manual, the safety precautions are ranked as "WARNING" and "CAUTION".

⚠ WARNING	**Indicates that incorrect handling may cause hazardous conditions, resulting in death or severe injury.**
⚠ CAUTION	**Indicates that incorrect handling may cause hazardous conditions, resulting in minor or moderate injury or property damage.**

Note that failure to observe ⚠ CAUTION may lead to a serious accident depending on the circumstances.

Make sure to observe both warnings and cautions to ensure personal safety.

Please save this manual to make it accessible when required and always forward it to the end user.

[DESIGN PRECAUTIONS]

⚠WARNING

- Some failures of the GOT, communication unit or cable may keep the outputs on or off.
  Some failures of a touch panel may cause malfunction of the input objects such as a touch switch.
  An external monitoring circuit should be provided to check for output signals which may lead to a serious accident. Not doing so can cause an accident due to false output or malfunction.
- Do not use the GOT as the warning device that may cause a serious accident.
  An independent and redundant hardware or mechanical interlock is required to configure the device that displays and outputs serious warning.
  Failure to observe this instruction may result in an accident due to incorrect output or malfunction.
- When the GOT backlight has a failure, the GOT status will be as follows. Failure to observe this instruction may result in an accident due to incorrect output or malfunction.
  [GT27, GT25, GT23]
  The POWER LED blinks (orange/blue), the display section dims, and inputs by a touch switch are disabled.
  [GT2105-Q]
  The POWER LED blinks (orange/blue), and the display section dims. However, inputs by a touch switch are still available.
  [GT2107-W, GT2104-R, GT2104-P, GT2103-P, GS21]
  The display section dims. However, inputs by a touch switch are still available.
  Even if the display section dims, inputs by a touch switch may still be available. This may cause an unintended operation of the touch switch.
  For example, if an operator assumes that the display section has dimmed because of the screen save function and touches the display section to cancel the screen save, a touch switch may be activated.
  The GOT backlight failure can be checked with a system signal of the GOT. (This system signal is not available on GT2107-W, GT2104-R, GT2104-P, GT2103-P, and GS21.)

[DESIGN PRECAUTIONS]

⚠ WARNING

- The display section of the GOT is an analog-resistive type touch panel.
  When multiple points of the display section are touched simultaneously, an accident may occur due to incorrect output or malfunction.
  [GT27]
  Do not touch three points or more simultaneously on the display section. Doing so may cause an accident due to an incorrect output or malfunction.
  [GT25, GT23, GT21, GS21]
  Do not touch two points or more simultaneously on the display section. Doing so may cause a touch switch near the touched points to operate unexpectedly, or may cause an accident due to an incorrect output or malfunction.
- When programs or parameters of the controller (such as a PLC) that is monitored by the GOT are changed, be sure to reset the GOT, or turn on the unit again after shutting off the power as soon as possible.
  Not doing so can cause an accident due to false output or malfunction.
- If a communication fault (including cable disconnection) occurs during monitoring on the GOT, communication between the GOT and PLC CPU is suspended and the GOT becomes inoperative.
  (1) For bus connection (GT27 and GT25 only): The GOT becomes inoperative. Power on the PLC CPU again to reestablish communication.
  (2) For other than bus connection: The GOT becomes inoperative.
  A system where the GOT is used should be configured to perform any significant operation to the system by using the switches of a device other than the GOT on the assumption that a GOT communication fault will occur.
  Not doing so can cause an accident due to false output or malfunction.
- To maintain the security (confidentiality, integrity, and availability) of the GOT and the system against unauthorized access, DoS[*1] attacks, computer viruses, and other cyberattacks from unreliable networks and devices via network, take appropriate measures such as firewalls, virtual private networks (VPNs), and antivirus solutions.
  Mitsubishi Electric shall have no responsibility or liability for any problems involving GOT trouble and system trouble by unauthorized access, DoS attacks, computer viruses, and other cyberattacks.
  *1 DoS: A denial-of-service (DoS) attack disrupts services by overloading systems or exploiting vulnerabilities, resulting in a denial-of-service (DoS) state.

[DESIGN PRECAUTIONS]

⚠CAUTION

- Do not bundle the control and communication cables with main-circuit, power or other wiring.
  Run the above cables separately from such wiring and keep them a minimum of 100mm apart.
  Not doing so noise can cause a malfunction.
- Do not press the GOT display section with a pointed material as a pen or driver.
  Doing so can result in a damage or failure of the display section.
- When the GOT connects to an Ethernet network, the IP address setting is restricted according to the system configuration.
  [GT27, GT25, GT23]
  When a GOT2000 series model and a GOT1000 series model are on an Ethernet network, do not set the IP address 192.168.0.18 for the GOTs and the controllers on this network.
  Doing so can cause IP address duplication at the GOT startup, adversely affecting the communication of the device with the IP address 192.168.0.18.
  The operation at the IP address duplication depends on the devices and the system.
  [GT21, GS21]
  Setting the IP address (192.168.3.18) in the following system configurations can cause IP address duplication at GOT startup, adversely affecting communications of the device whose IP address is 192.168.3.18.
  The operation at IP address duplication depends on the devices and the system.
  When multiple GOTs connect to the Ethernet network:
  Do not set the IP address (192.168.3.18) for the GOTs and the controllers in the network.
  When one GOT connects to the Ethernet network:
  Do not set the IP address (192.168.3.18) for the controllers other than the GOT in the network.
- When using the Ethernet interfaces, set an IP address for each interface to access a different network.
- Turn on the controllers and the network devices to be ready for communication before they communicate with the GOT.
  Failure to do so can cause a communication error on the GOT.
- When the GOT is subject to shock or vibration, or some colors appear on the screen of the GOT, the screen of the GOT might flicker.

[MOUNTING PRECAUTIONS]

⚠WARNING

- Be sure to shut off all phases of the external power supply used by the system before mounting or removing the GOT main unit to/from the panel.
  Not doing so can cause the unit to fail or malfunction.
- Be sure to shut off all phases of the external power supply used by the system before mounting or removing the option unit onto/from the GOT. (GT27, GT25 Only)

[MOUNTING PRECAUTIONS]

⚠CAUTION

- Use the GOT in the environment that satisfies the general specifications described in this manual. Not doing so can cause an electric shock, fire, malfunction or product damage or deterioration.
- When mounting the GOT to the control panel, tighten the mounting screws in the specified torque range with a Phillips-head screwdriver No. 2.
  [GT27, GT25-W, GT2512-S, GT2510-V, GT2508-V, GT23, GT2107-W]
  Specified torque range (0.36 N•m to 0.48 N•m)
  [GT2505-V, GT2105-Q]
  Specified torque range (0.30 N•m to 0.50 N•m)
  [GT2104-R, GT2104-P, GT2103-P]
  Specified torque range (0.20 N•m to 0.25 N•m)
  Undertightening can cause the GOT to drop, short circuit or malfunction.
  Overtightening can cause a drop, short circuit or malfunction due to the damage of the screws or the GOT.
- When mounting a unit on the GOT, tighten the mounting screws in the following specified torque range.
  [GT27, GT25 (except GT25-W)]
  When loading the communication unit or option unit other than wireless LAN unit to the GOT, fit it to the connection interface of the GOT and tighten the mounting screws in the specified torque range (0.36 N•m to 0.48 N•m) with a Phillips-head screwdriver No. 2.
  When loading the wireless LAN unit to the GOT, fit it to the side interface of GOT and tighten the mounting screws in the specified torque range (0.10 N•m to 0.14 N•m) with a Phillips-head screwdriver No. 1.
  When the GOT is installed vertically, its side interface is positioned on the bottom.
  To prevent the falling of the wireless LAN communication unit from the side interface, install or remove the unit while holding it with hands.
  [GT25-W]
  When mounting the wireless LAN communication unit on the GOT, fit it to the wireless LAN communication unit interface and tighten the mounting screws in the specified torque range (0.10 N•m to 0.14 N•m) with a Phillips-head screwdriver No.1.
  [GT2103-P]
  When mounting the SD card unit on the GOT, fit it to the side of the GOT and tighten the tapping screws in the specified torque range (0.3 N•m to 0.6 N•m) with a Phillips-head screwdriver No. 2.
  Under tightening can cause the GOT to drop, short circuit or malfunction.
  Overtightening can cause a drop, failure or malfunction due to the damage of the screws or unit.
- When closing the USB environmental protection cover, note the following points to ensure the IP rating.
  [GT27, GT25 (except GT25-W and GT2505-V)]
  Push the [PUSH] mark on the latch firmly to fix the cover to the GOT.
  [GT2512-WX, GT2510-WX, GT2507-W, GT2505-V, GT2107-W]
  Push the USB mark on the latch firmly to fix the cover to the GOT.
  [GT2105-Q]
  Tighten the lower fixing screws of the cover in the specified torque range (0.36 N•m to 0.48 N•m) to fix the cover to the GOT.

[MOUNTING PRECAUTIONS]

⚠CAUTION

- Remove the protective film of the GOT.
  When the user continues using the GOT with the protective film, the film may not be removed.
  In addition, for the models equipped with the human sensor function, using the GOT with the protective film may cause the human sensor not to function properly.
- For GT2512F-S, GT2510F-V, and GT2508F-V, attach an environmental protection sheet dedicated to the open frame model (sold separately) to the display section.
  Or, attach a user-prepared environmental protection sheet.
  Not doing so may damage or soil the GOT or cause foreign matter to enter the GOT, resulting in a failure or malfunction.
- When installing the supplied fittings on GT2512F-S, GT2510F-V, or GT2508F-V, tighten screws in the specified torque range (0.8 N•m to 1.0 N•m).
  Meld studs on the control panel to fasten the fittings.
  The studs must have strength adequate to withstand a tightening torque of 0.9 N•m or more.
  Make sure that no foreign matter such as welding waste is at and around the bases of the studs.
  Tighten nuts on the studs in the specified torque range (0.8 N•m to 0.9 N•m) with a wrench for M4 nuts.
  Undertightening a screw or nut may cause the GOT to drop, short-circuit, or malfunction.
  Overtightening a screw or nut may damage it or the GOT, causing the GOT to drop, short-circuit, or malfunction.
- Do not operate or store the GOT in the environment exposed to direct sunlight, rain, high temperature, dust, humidity, or vibrations.
- Although GT2507T-W is ruggedized for environments such as UV rays, temperatures and vibrations, its operation is not guaranteed in all conditions and environments.
  Make sure to use or store the GOT in an appropriate environment.
- When using the GOT in the environment of oil or chemicals, use the protective cover for oil.
  Failure to do so may cause failure or malfunction due to the oil or chemical entering into the GOT.
- Do not operate the GOT with its display section frozen.
  The water droplets on the display section may freeze at a low temperature.
  Touch switches and other input objects may malfunction if the display section is frozen.

[WIRING PRECAUTIONS]

⚠WARNING

- Be sure to shut off all phases of the external power supply used by the system before wiring.
  Failure to do so may result in an electric shock, product damage or malfunctions.

[WIRING PRECAUTIONS]

⚠CAUTION

- When grounding the FG terminal and LG terminal of the GOT power supply section, note the following points.
  Not doing so may cause an electric shock or malfunction.
  [GT27, GT25, GT23, GT2107-W, GT2105-Q, GS21]
  Make sure to ground the FG terminal and LG terminal of the GOT power supply section solely for the GOT (ground resistance: 100 Ω or less, cross-sectional area of the ground cable: 2.0 mm^2 or more).
  (GT2705-V, GT25-W, GT2505-V, GT2107-W, GT2105-Q, and GS21 do not have the LG terminal.)
  [GT2104-R, GT2104-P, GT2103-P]
  Make sure to ground the FG terminal of the GOT power supply section with a ground resistance of 100 Ω or less. (For GT2104-PMBLS and GT2103-PMBLS, grounding is unnecessary.)
- When tightening the terminal screws, use the following screwdrivers.
  [GT27, GT25, GT23, GT2107-W, GT2105-Q, GS21]
  Use a Phillips-head screwdriver No. 2.
  [GT2104-R, GT2104-P, GT2103-P]
  For the usable screwdrivers, refer to the following.
  GOT2000 Series User's Manual (Hardware)
- Tighten the terminal screws of the GOT power supply section in the following specified torque range.
  [GT27, GT25, GT23]
  Specified torque range (0.5 N•m to 0.8 N•m)
- For a terminal processing of a wire to the GOT power supply section, use the following terminal.
  [GT27, GT25, GT23, GT2107-W, GT2105-Q, GS21]
  Use applicable solderless terminals for terminal processing of a wire and tighten them with the specified torque.
  Not doing so can cause a fire, failure or malfunction.
  [GT2104-R, GT2104-P, GT2103-P]
  Connect a stranded wire or a solid wire directly, or use a rod terminal with an insulation sleeve.
- Correctly wire the GOT power supply section after confirming the rated voltage and terminal arrangement of the product.
  Not doing so can cause a fire or failure.
- Tighten the terminal screws of the GOT power supply section in the following specified torque range.
  [GT27, GT25, GT23, GT2107-W, GT2105-Q]
  Specified torque range (0.5 N•m to 0.8 N•m)
  [GT2104-R, GT2104-P, GT2103-P]
  Specified torque range (0.22 N•m to 0.25 N•m)
  [GS21]
  Specified torque range (0.5 N•m to 0.6 N•m)
- Exercise care to avoid foreign matter such as chips and wire offcuts entering the GOT.
  Not doing so can cause a fire, failure or malfunction.
- Some models have an ingress prevention label on their top to prevent foreign matter, such as wire offcuts, from entering the GOT during wiring.
  Do not peel this label during wiring.
  Before starting system operation, be sure to peel this label because of heat dissipation.

[WIRING PRECAUTIONS]

⚠CAUTION

- Plug the communication cable into the GOT interface or the connector of the connected unit, and tighten the mounting screws and the terminal screws in the specified torque range.
  Undertightening can cause a short circuit or malfunction.
  Overtightening can cause a short circuit or malfunction due to the damage of the screws or unit.
- Plug the QnA/ACPU/Motion controller (A series) bus connection cable by inserting it into the connector of the connected unit until it "clicks".
  After plugging, check that it has been inserted snugly.
  Not doing so can cause a malfunction due to a contact fault.

[TEST OPERATION PRECAUTIONS]

⚠WARNING

- Before testing the operation of a user-created screen (such as turning on or off a bit device, changing the current value of a word device, changing the set value or current value of a timer or counter, and changing the current value of a buffer memory), thoroughly read the manual to fully understand the operating procedure.
  During the test operation, never change the data of the devices which are used to perform significant operation for the system.
  Doing so may cause an accident due to an incorrect output or malfunction.

[STARTUP/MAINTENANCE PRECAUTIONS]

⚠WARNING

- When power is on, do not touch the terminals.
  Doing so can cause an electric shock or malfunction.
- Correctly connect the battery connector.
  Do not charge, disassemble, heat, short-circuit, solder, or throw the battery into the fire.
  Doing so will cause the battery to produce heat, explode, or ignite, resulting in injury and fire.
- Before starting cleaning or terminal screw retightening, always switch off the power externally in all phases.
  Not switching the power off in all phases can cause a unit failure or malfunction.
  Undertightening can cause a short circuit or malfunction.
  Overtightening can cause a short circuit or malfunction due to the damage of the screws or unit.

[STARTUP/MAINTENANCE PRECAUTIONS]

⚠CAUTION

- Do not disassemble or modify the unit.
  Doing so can cause a failure, malfunction, injury or fire.
- Do not touch the conductive and electronic parts of the unit directly.
  Doing so can cause a unit malfunction or failure.
- The cables connected to the unit must be run in ducts or clamped.
  Not doing so can cause the unit or cable to be damaged due to the dangling, motion or accidental pulling of the cables or can cause a malfunction due to a cable connection fault.
- When unplugging the cable connected to the unit, do not hold and pull from the cable portion.
  Doing so can cause the unit or cable to be damaged or can cause a malfunction due to a cable connection fault.
- Do not drop the module or subject it to strong shock. A module damage may result.
- Do not drop or give an impact to the battery mounted to the unit.
  Doing so may damage the battery, causing the battery fluid to leak inside the battery.
  If the battery is dropped or given an impact, dispose of it without using.
- Before touching the unit, always touch grounded metals, etc. to discharge static electricity from human body, etc.
  Not doing so can cause the unit to fail or malfunction.
- Use the battery manufactured by Mitsubishi Electric Corporation.
  Use of other batteries may cause a risk of fire or explosion.
- Dispose of used battery promptly.
  Keep away from children.Do not disassemble and do not dispose of in fire.
- Be sure to shut off all phases of the external power supply before replacing the battery or using the dip switch of the terminating resistor.
  Not doing so can cause the unit to fail or malfunction by static electricity.
- Before cleaning the GOT, be sure to turn off the power.
  Before cleaning, check the following items.
  • Ensure that there are no problems with the installation condition of the GOT to the control panel.
  • Ensure that there are no damages on the environmental protection sheet (not replaceable).
  If the environmental protection sheet peels or the cleaning solution enters between the sheet and the display section during cleaning, stop the cleaning immediately.
  In such a case, do not use the GOT.

[TOUCH PANEL PRECAUTIONS]

⚠CAUTION

- For the analog-resistive film type touch panels, normally the adjustment is not required.
  However, the difference between a touched position and the object position may occur as the period of use elapses.
  When any difference between a touched position and the object position occurs, execute the touch panel calibration.
- When any difference between a touched position and the object position occurs, other object may be activated.
  This may cause an unexpected operation due to incorrect output or malfunction.

[PRECAUTIONS FOR USING A DATA STORAGE]

⚠WARNING

- Do not remove the SD card from drive A while the SD card is being accessed by the GOT, or the GOT may stop processing for about 20 seconds.
  During this stop, you cannot operate the GOT, and the functions running in the background, including the screen refresh, alarm, logging, and script, also stop.
  This stop may affect the system operation, causing an accident.
  Before removing the SD card, check the following items.
  [GT27, GT25, GT23(Excluding GT2505-V and GT25HS-V)]
  Before removing the SD card, check that the SD card access LED is off.
  [GT2505-V, GT25HS-V]
  Make sure to turn off the SD card access switch before removing the SD card.Not doing so may damage the SD card and files.
  [GT21, GS21]
  Disable the SD card access in the GOT utility, and then check that the SD card access LED is off before removing the SD card.
- Do not remove the data storage from the file server (drive N) that is being accessed by the GOT, or the system operation may be affected.
  Before removing the data storage, check the relevant system signal to make sure that the data storage is not being accessed.

[PRECAUTIONS FOR USING A DATA STORAGE]

⚠CAUTION

- Do not remove the data storage from the GOT while the data storage is being accessed by the GOT, or the data storage and files may be damaged.
  Before removing the data storage, check the SD card access LED, relevant system signal, or others to make sure that the data storage is not being accessed.
- Turning off the GOT while it accesses the SD card results in damage to the SD card and files.
- When using the GOT with an SD card inserted, check the following items.
  [GT27, GT25, GT23(Excluding GT2505-V and GT25HS-V)]
  After inserting an SD card into the GOT, make sure to close the SD card cover.
  Otherwise, data cannot be read or written.
  [GT2505-V, GT25HS-V]
  After inserting an SD card into the GOT, make sure to turn on the SD card access switch.
  Otherwise, data cannot be read or written.
  [GT21, GS21]
  After inserting an SD card into the SD card unit, make sure to enable the SD card access in the GOT utility.
  Otherwise, data cannot be read or written.

[PRECAUTIONS FOR USING A DATA STORAGE]

⚠CAUTION

- When removing the SD card from the GOT, make sure to support the SD card by hand as it may pop out.
  Not doing so may cause the SD card to drop from the GOT, resulting in a failure or break.
- When inserting a USB device into a USB interface of the GOT, make sure to insert the device into the interface firmly.
  Not doing so may cause the USB device to drop from the GOT, resulting in a failure or break. (GT27, GT25, and GT2107-W)
- Before removing the data storage from the GOT, follow the procedure for removal on the utility screen of the GOT. After the successful completion dialog is displayed, remove the data storage by hand carefully.
  Not doing so may cause the data storage to drop from the GOT, resulting in a failure or break.

[PRECAUTIONS FOR USE]

⚠CAUTION

- Do not touch the edges of the touch panel (display section) repeatedly.
  Doing so may result in a failure.
- Do not turn off the GOT while data is being written to the storage memory (ROM) or SD card.
  Doing so may corrupt the data, rendering the GOT inoperative.
- The GOT rugged model uses the environmental protection sheet (not replaceable) with UV protection function on the front surface.
  Therefore, it is possible to suppress deterioration of the touch panel or the liquid crystal display panel that may be caused by ultraviolet rays.
  Note that if the rugged model is exposed to ultraviolet rays for an extended period of time, the front surface may turn yellow.
  If the rugged model is likely to be exposed to ultraviolet rays for an extended period of time, it is recommended to use a UV protective sheet (option).

[PRECAUTIONS FOR REMOTE CONTROL]

⚠WARNING

- Remote control is available through a network by using GOT functions, including theSoftGOT-GOT link function, the remote personal computer operation function, the VNC server function, and the GOT Mobile function.
  If you remotely operate control equipment using such functions, the field operator may not notice the remote operation, leading to an accident.
  In addition, a communication delay or interruption may occur depending on the network environment, and remote control of control equipment cannot be performed normally in some cases.
  Before using the above functions to perform remote control, fully grasp the circumstances of the field site and ensure safety.
- When operating the server (GOT) of the GOT Mobile function to disconnect a client, notify the operator of the client about the disconnection beforehand.
  Not doing so may cause an accident.

[PRECAUTIONS FOR EXCLUSIVE AUTHORIZATION CONTROL]

⚠WARNING

- Before using the GOT network interaction function to prevent simultaneous operations from multiple pieces of equipment, make sure you understand the function.
  You can enable or disable the exclusive authorization control of the GOT network interaction function for each screen. (For all screens, the exclusive authorization control is disabled by default.)
  Properly determine the screens for which the exclusive authorization control is required, and set the control by screen.
  A screen for which the exclusive authorization control is disabled is operable simultaneously from multiple pieces of equipment. Make sure to determine the operation period for each operator, fully grasp the circumstances of the field site, and ensure safety to perform operations.

[DISPOSAL PRECAUTIONS]

⚠CAUTION

- When disposing of this product, treat it as industrial waste.
  When disposing of batteries, separate them from other wastes according to the local regulations.
  (Refer to the GOT2000 Series User's Manual (Hardware) for details of the battery directive in the EU member states.)

[TRANSPORTATION PRECAUTIONS]

⚠CAUTION

- When transporting lithium batteries, make sure to treat them based on the transport regulations.
  (Refer to the GOT2000 Series User's Manual (Hardware) for details of the regulated models.)
- Make sure to transport the GOT main unit and/or relevant unit(s) in the manner they will not be exposed to the impact exceeding the impact resistance described in the general specifications of this manual, as they are precision devices.
  Failure to do so may cause the unit to fail.
  Check if the unit operates correctly after transportation.
- When fumigants that contain halogen materials such as fluorine, chlorine, bromine, and iodine are used for disinfecting and protecting wooden packaging from insects, they cause malfunction when entering our products.
  Please take necessary precautions to ensure that remaining materials from fumigant do not enter our products, or treat packaging with methods other than fumigation (heat method).
  Additionally, disinfect and protect wood from insects before packing products.

CONTENTS

SAFETY PRECAUTIONS 1
INTRODUCTION 20
Manuals for GT Works3 20
Abbreviations, Generic Terms, and Model Icons 22

PART 1 PREPARATORY PROCEDURES FOR MONITORING

CHAPTER 1 PREPARATORY PROCEDURES FOR MONITORING 30

1.1 Setting the Communication Interface 31
Setting connected equipment (Channel setting) 31
GOT Ethernet Setting 44
I/F communication setting 48
Precautions 50
1.2 Writing the Project Data onto the GOT 51
Writing the project data onto the GOT 51
Checking the project data and OS writing on GOT 52
1.3 Option Devices for the Respective Connection 53
Communication module 53
Option unit 55
Conversion cable 55
Serial multi-drop connection unit 55
Field network adapter unit 55
RS-232/485 signal conversion adapter 55
Precautions when installing units on top of one another 56
1.4 Connection Cables for the Respective Connection 58
GOT connector specifications 58
Coaxial cableconnector connection method 60
Terminating resistors of GOT 62
Setting the RS-232/485 signal conversion adaptor 67
1.5 Verifying GOT Recognizes Connected Equipment 68
1.6 Checking for Normal Monitoring 70
Check on the GOT 70
Confirming the communication state on the GOT side (For Ethernet connection) 73
Confirming the communication state to each station (Station monitoring function) 75

PART 2 CONNECTIONS TO NON-MITSUBISHI ELECTRIC PRODUCTS

CHAPTER 2 HITACHI IES PLC 80

2.1 Connectable Model List 80
2.2 Serial Connection 81
Connection to large-sized H series 81
Connecting to H-200 to 252, H series board type, or EH-150 83
Connection diagram 84

GOT side settings . . . 86
PLC side setting . . . 89
2.3 Ethernet Connection . . . 90
Connecting to EHV or MICRO-EHV series . . . 90
GOT side settings . . . 92
PLC side setting . . . 96
2.4 Settable Device Range . . . 99

CHAPTER 3 HITACHI PLC 101

3.1 Connectable Model List . . . 101
3.2 Serial connection. . . . 102
Connecting to S10V. . . . 102
Connecting to S10mini . . . 103
Connection diagram . . . 104
GOT Side Settings. . . . 106
PLC Side Setting . . . 108
3.3 Ethernet Connection . . . 110
Connecting to S10VE . . . 110
GOT Side Settings. . . . 111
PLC side setting . . . 114
3.4 Settable Device Range . . . 116

CHAPTER 4 FUJI PLC 117

4.1 Connectable Model List . . . 117
4.2 Serial connection. . . . 118
Connecting to MICREX-F55 . . . 118
Connecting to MICREX-F70 . . . 121
Connecting to MICREX-F120S/140S/15□S. . . . 125
Connecting to MICREX-SX SPH . . . 129
Connection Diagram . . . 132
GOT Side Settings. . . . 137
PLC Side Setting . . . 140
Station number setting. . . . 148
4.3 Ethernet Connection . . . 149
Connecting to MICREX-SX SPH . . . 149
GOT Side Settings. . . . 150
PLC side setting (MICREX-SX SPH). . . . 153
4.4 Settable Device Range . . . 154
4.5 Precautions . . . 154

CHAPTER 5 FUJI TEMPERATURE CONTROLLER 155

5.1 Connectable Model List . . . 155
5.2 System Configuration . . . 156
Connecting to PXR3, PXR4, PXR5 or PXR9. . . . 156
Connecting to PXG4, PXG5, PXG9 or PXH9 . . . 159
Connecting to PXF4, PXF5 or PXF9 . . . 162
Connecting to PUMA or PUMB . . . 164
5.3 Connection Diagram . . . 167
RS-232 cable. . . . 167
RS-485 cable. . . . 170

5.4 GOT Side Settings . . . 175
Setting the communication interface (Controller setting) . . . 175
Communication detail settings . . . 176
5.5 Temperature Controller Side Setting . . . 177
Connecting to PXR3/4/5/9 . . . 177
Connecting to PXG4, PXG5 or PXG9 . . . 178
Connecting to PXH9 . . . 178
Connecting to PXF4, PXF5 or PXF9 . . . 179
Connecting to PUMA or PUMB . . . 179
Connecting to interface converter (RC-77) . . . 180
Connecting to interface converter (SI-30A) . . . 181
Connecting to interface converter (KS-485) . . . 182
Connecting to interface converter (K3SC-10) . . . 182
Station number setting . . . 185
5.6 Settable Device Range . . . 186
5.7 Precautions . . . 186

CHAPTER 6 YASKAWA PLC 187

6.1 Connectable Model List . . . 187
6.2 Serial Connection . . . 188
Connecting to GL120 or GL130 . . . 188
Connecting to GL60S, GL60H, or GL70H . . . 189
Connecting to MP920/930, CP-9300MS/9200(H), or PROGIC-8 . . . 190
Connecting to MP940 . . . 192
Connecting to CP-9200SH or CP-317 . . . 193
Connecting to MP2200, MP2300, or MP2300S . . . 194
Connection Diagram . . . 195
GOT Side Settings . . . 203
PLC Side Settings . . . 206
6.3 Ethernet Connection . . . 209
Connecting to MP920, MP2200, MP2300, or MP2300S . . . 209
Connecting to CP-9200SH, CP-312, or CP-317 . . . 211
Connecting to MP3200 or MP3300 . . . 212
GOT Side Settings . . . 213
PLC side setting (MP2000 or MP920 series) . . . 217
PLC side setting (CP-9200SH, CP-312, or CP-317 series) . . . 222
PLC side setting (MP3000 series) . . . 226
Precautions . . . 229
6.4 Settable Device Range . . . 230

CHAPTER 7 YASKAWA ROBOT CONTROLLER 231

7.1 Connectable Model List . . . 231
7.2 System Configuration . . . 232
Connecting to a robot controller . . . 232
7.3 GOT side settings . . . 233
Setting the communication interface (Controller setting) . . . 233
Communication detail settings . . . 234
GOT Ethernet setting . . . 235
Connected Ethernet controller setting . . . 236
7.4 Robot Controller Settings . . . 237

Connecting to a robot controller . . . 237
7.5 Settable Device Range . . . 238
7.6 Precautions . . . 239

CHAPTER 8 YOKOGAWA PLC 241

8.1 Connectable Model List . . . 241
8.2 Serial Connection . . . 242
Connecting to FA-M3 or FA-M3V . . . 242
Connecting to FA500 . . . 244
Connecting to STARDOM . . . 245
Connection diagram . . . 246
GOT side settings . . . 249
PLC side setting . . . 251
Connecting a conversion cable . . . 252
Connecting to PC link module . . . 253
Connecting to STARDOM . . . 259
Precautions . . . 261
8.3 Ethernet Connection . . . 262
Connecting to FA-M3 or FA-M3V . . . 262
GOT Side Settings . . . 264
PLC side setting . . . 267
Connecting to Ethernet Interface Module . . . 268
Connecting to FA-M3, FA-M3V (built-in Ethernet interface) . . . 270
Precautions . . . 271
8.4 Settable Device Range . . . 272

CHAPTER 9 YOKOGAWA TEMPERATURE CONTROLLER 273

9.1 Connectable Model List . . . 273
9.2 System Configuration . . . 274
Connecting to GREEN Series . . . 274
Connecting to UT100 Series . . . 277
Connecting to UT2000 Series . . . 279
Connecting to UTAdvanced Series . . . 281
9.3 Connection Diagram . . . 286
RS-232 cable . . . 286
RS-485 cable . . . 287
9.4 GOT Side Settings . . . 306
Setting the communication interface (Controller setting) . . . 306
Communication detail settings . . . 307
9.5 Temperature Controller Side Setting . . . 308
Connecting to GREEN Series . . . 308
Connecting to UT100 Series . . . 309
Connecting to UT2000 Series . . . 309
Connecting to UTAdvanced Series . . . 310
Connecting to RS232C/RS485 converter (ML2-□) . . . 311
Station number setting . . . 313
9.6 Settable Device Range . . . 315
9.7 Precautions . . . 315

CHAPTER 10 RKC TEMPERATURE CONTROLLER 317

10.1 Connectable Model List . . . 317
10.2 System Configuration . . . 319
Connecting to SR Mini HG series (HGH-PCP-J) . . . 319
Connecting to SR Mini HG series (H-PCP-A, H-PCP-B) . . . 323
Connecting to SRZ series . . . 325
Connecting to SRJ series . . . 329
Connecting to CB series . . . 331
Connecting to FB series . . . 333
Connecting to RB series . . . 338
Connecting to PF, HA, RMC, MA, AG, or SA series . . . 340
Connecting to THV series . . . 344
Connecting to SRX series . . . 347
Connecting to SB1 series . . . 349
Connecting to B400 series . . . 351
Connecting to FZ series . . . 352
Connecting to RZ series . . . 356
Connecting to PZ series . . . 358
Connecting to GZ series . . . 362
10.3 Connection Diagram . . . 366
RS-232 cable . . . 366
RS-422 cable . . . 368
RS-485 cable . . . 373
10.4 GOT Side Settings . . . 382
Setting the communication interface (Controller setting) . . . 382
Communication detail settings . . . 383
10.5 Temperature Controller Side Setting . . . 384
Connecting to SR Mini HG series (HGH-PCP-J) . . . 384
Connecting to SR Mini HG series (H-PCP-A, H-PCP-B) . . . 387
Connecting to Z-TIO, Z-DIO, Z-CT . . . 388
Connecting to Z-COM module . . . 390
Connecting to SRJ series . . . 392
Connecting to CB series . . . 392
Connecting to FB series . . . 393
Connecting to RB series . . . 394
Connecting to PF series . . . 394
Connecting to HA series . . . 395
Connecting to AG series . . . 396
Connecting to RMC series . . . 396
Connecting to MA series . . . 397
Connecting to THV series . . . 397
Connecting to SA series . . . 398
Connecting to X-TIO Module . . . 398
Connecting to SB1 series . . . 400
Connecting to B400 series . . . 401
Connecting to FZ series . . . 403
Connecting to RZ series . . . 404
Connecting to PZ series . . . 405
Connecting to GZ series . . . 406
Station number setting . . . 407

10.6 **Settable Device Range** . . . 409
10.7 **Precautions** . . . 409

CHAPTER 11 ALLEN-BRADLEY PLC 411

11.1 **Connectable Model List** . . . 411
11.2 **Serial Connection** . . . 414
Connecting to SLC500 series . . . 414
Connecting to MicroLogix series . . . 416
Connecting to ControlLogix, CompactLogix, or FlexLogix series . . . 419
Connection Diagram . . . 420
GOT Side Settings . . . 423
PLC Side Setting . . . 427
11.3 **Ethernet Connection** . . . 429
Ethernet connection type: Connecting to Ethernet (AB MicroLogix) . . . 429
Ethernet connection type: Connecting to Ethernet (AB) . . . 430
Ethernet connection type: Connecting to Ethernet (AB Tag) . . . 432
GOT Side Settings . . . 434
PLC side setting . . . 440
Precautions . . . 441
11.4 **Settable Device Range** . . . 442

CHAPTER 12 GE PLC 443

12.1 **Connectable Model List** . . . 443
12.2 **System Configuration** . . . 445
Connecting to Series90-30 . . . 445
Connecting to Series90-70 . . . 448
Connecting to VersaMax Micro . . . 450
12.3 **Connection Diagram** . . . 452
RS-232 cable . . . 452
RS-422 cable . . . 453
12.4 **GOT Side Settings** . . . 455
Setting the communication interface (Controller setting) . . . 455
Communication detail settings . . . 456
12.5 **PLC Side Setting** . . . 457
Connecting to Series 90-30 . . . 457
Connecting to VersaMaxMicro . . . 458
Connecting to IC693CMM311 . . . 458
Connecting to IC697CMM711 . . . 459
Station number setting . . . 459
12.6 **Settable Device Range** . . . 460
12.7 **Precautions** . . . 460

CHAPTER 13 LS INDUSTRIAL SYSTEMS PLC 461

13.1 **Connectable Model List** . . . 461
13.2 **Serial Connection** . . . 462
Connecting to K80S or K120S . . . 462
Connecting to K200S . . . 465
Connecting to K300S . . . 467
Connection Diagram . . . 469
GOT Side Settings . . . 473

PLC Side Setting . . . 475
13.3 Ethernet Connection . . . 476
Connecting to XGK . . . 476
GOT side settings . . . 478
PLC Side Setting . . . 483
Precautions . . . 484
13.4 Settable Device Range . . . 485

CHAPTER 14 MITSUBISHI ELECTRIC INDIA PLC 487

14.1 Connectable Model List . . . 487
14.2 System Configuration . . . 488
Connecting to Nexgenie 1000 PLC, Nexgenie 2000 PLUS PLC . . . 488
14.3 Connection Diagram . . . 490
RS-232 cable . . . 490
RS-422 cable . . . 491
RS-485 cable . . . 493
14.4 GOT Side Settings . . . 496
Setting the communication interface (Controller setting) . . . 496
Communication detail settings . . . 497
14.5 PLC Side Settings . . . 498
14.6 Settable Device Range . . . 499

CHAPTER 15 SICK SAFETY CONTROLLER 501

15.1 Connectable Model List . . . 501
15.2 System Configuration . . . 502
Connecting to Flexi Soft . . . 502
15.3 Connection Diagram . . . 503
RS-232 cable . . . 503
15.4 GOT Side Settings . . . 504
Setting the communication interface (Controller setting) . . . 504
Communication detail settings . . . 505
15.5 PLC Side Setting . . . 506
Connecting to Flexi Soft . . . 506
15.6 Settable Device Range . . . 507

CHAPTER 16 SIEMENS PLC 509

16.1 Connectable Model List . . . 509
16.2 Serial Connection . . . 510
Connecting to SIMATIC S7-300 or SIMATIC S7-400 series . . . 510
Connecting to SIMATIC S7-200 series . . . 512
Connection Diagram . . . 513
GOT Side Settings . . . 515
PLC Side Setting . . . 517
Connecting to HMI Adapter . . . 518
Connecting to SIMATIC S7-200, SIMATIC S7-200 CN/SMART . . . 518
Precautions . . . 519
16.3 Ethernet Connection . . . 520
Ethernet connection type: Connecting to FETCH/WRITE . . . 520
Ethernet connection type: Connecting to OP communication . . . 521
GOT Side Settings . . . 523

PLC side setting . . . 528
Precautions . . . 530
16.4 Settable Device Range . . . 531

CHAPTER 17 HIRATA CORPORATION HNC CONTROLLER 533

CHAPTER 18 MURATEC CONTROLLER 535

APPENDIX 537

Appendix 1 Settable Device Range . . . 537
HITACHI IES equipment ([HITACHI IES EHV]) . . . 538
HITACHI IES equipment ([HITACHI IES HIDIC H]) . . . 544
HITACHI equipment ([HITACHI S10VE]) . . . 549
HITACHI equipment ([HITACHI S10mini/S10V]) . . . 560
FUJI equipment ([FUJI Temperature Controller/Digital Controller]) . . . 567
FUJI equipment ([FUJI MICREX-F]) . . . 570
FUJI equipment ([FUJI MICREX-SX SPH]) . . . 576
YASKAWA equipment ([YASKAWA GL/PROGIC8]) . . . 579
YASKAWA equipment ([YASKAWA CP9200(H)]) . . . 583
YASKAWA equipment ([YASKAWA CP9300MS(MC compatible)]) . . . 586
YASKAWA equipment ([YASKAWA MP2000/MP900/CP9200SH]) . . . 589
YASKAWA equipment ([YASKAWA MP3000]) . . . 592
YASKAWA equipment ([YASKAWA Robot Controller]) . . . 595
YOKOGAWA equipment ([YOKOGAWA STARDOM/FA500/FA-M3]) . . . 601
YOKOGAWA equipment ([YOKOGAWA GREEN/UT100/UT2000/UTAdvanced]) . . . 606
RKC equipment ([RKC SR Mini HG]) . . . 609
ALLEN-BRADLEY equipment ([AB SLC500]) . . . 611
ALLEN-BRADLEY equipment ([AB MicroLogix]) . . . 614
ALLEN-BRADLEY equipment ([AB MicroLogix (Extended)]) . . . 619
ALLEN-BRADLEY equipment ([AB Control/CompactLogix]) . . . 619
ALLEN-BRADLEY equipment ([AB Control/CompactLogix(Tag)]) . . . 623
GE equipment ([GE Series 90]) . . . 624
LS IS equipment ([LS Industrial Systems XGK]) . . . 627
LS IS equipment ([LS Industrial Systems MASTER-K]) . . . 631
MITSUBISHI INDIA equipment ([MEI Nexgenie]) . . . 635
SICK equipment ([SICK Flexi Soft]) . . . 638
SIEMENS equipment ([SIEMENS S7-200] or [SIEMENS S7-200(CN/SMART)]) . . . 639
SIEMENS equipment ([SIEMENS S7-300/400]) . . . 644
SIEMENS equipment ([SIEMENS S7(Ethernet)]) . . . 649
SIEMENS equipment ([SIEMENS OP(Ethernet)]) . . . 653
REVISIONS . . . 661
WARRANTY . . . 663
Intellectual Property Rights . . . 664

INTRODUCTION

Thank you for choosing Mitsubishi Electric Graphic Operation Terminal (GOT).
Before using the product, read this manual carefully and make sure you understand the functions and performance of the GOT for correct use.
☞ Manuals for GT Works3
☞ Abbreviations, Generic Terms, and Model Icons

Manuals for GT Works3

The electronic manuals related to this product are installed together with the screen design software.
If you need the printed manuals, consult your local sales office.

Manuals for GT Designer3 (GOT2000)

Point

e-Manual refers to the Mitsubishi Electric FA electronic book manuals that can be browsed using a dedicated tool.
e-Manual has the following features:

- Required information can be cross-searched in multiple manuals.
- Other manuals can be accessed from the links in the manual.
- Hardware specifications of each part can be found from the product figures.
- Pages that users often browse can be bookmarked.
- Sample programs can be copied to the engineering tool.

■Screen design software-related manuals

Manual name	Manual number (Model code)	Format
GT Works3 Installation Instructions	-	PDF
GT Designer3 (GOT2000) Screen Design Manual	SH-081220ENG (1D7ML9)	PDF e-Manual
GT Converter2 Version3 Operating Manual for GT Works3	SH-080862ENG	PDF e-Manual
GOT2000 Series MES Interface Function Manual for GT Works3 Version1	SH-081228ENG	PDF e-Manual

■Connection manuals

Manual name	Manual number (Model code)	Format
GOT2000 Series Connection Manual (Mitsubishi Electric Products) For GT Works3 Version1	SH-081197ENG (1D7MJ8)	PDF e-Manual
GOT2000 Series Connection Manual (Non-Mitsubishi Electric Products 1) For GT Works3 Version1	SH-081198ENG	PDF e-Manual
GOT2000 Series Connection Manual (Non-Mitsubishi Electric Products 2) For GT Works3 Version1	SH-081199ENG	PDF e-Manual
GOT2000 Series Connection Manual (Microcomputers, MODBUS/Fieldbus Products, Peripherals) For GT Works3 Version1	SH-081200ENG	PDF e-Manual
GOT2000 Series Handy GOT Connection Manual For GT Works3 Version1	SH-081867ENG (1D7MS9)	PDF e-Manual
GOT2000 Series Connection Manual (α2 Connection) for GT Works3 Version1	JY997D52301	PDF e-Manual

■GT SoftGOT2000 manuals

Manual name	Manual number (Model code)	Format
GT SoftGOT2000 Version1 Operating Manual	SH-081201ENG	PDF e-Manual
MELSOFT GT OPC UA Client Operating Manual	SH-082174ENG	PDF

■GOT2000 series user's manuals

Manual name	Manual number (Model code)	Format
GOT2000 Series User's Manual (Hardware)	SH-081194ENG (1D7MJ5)	PDF e-Manual
GOT2000 Series User's Manual (Utility)	SH-081195ENG (1D7MJ6)	PDF e-Manual
GOT2000 Series User's Manual (Monitor)	SH-081196ENG (1D7MJ7)	PDF e-Manual

■GOT SIMPLE series user's manuals

Manual name	Manual number	Format
GOT SIMPLE Series User's Manual	JY997D52901	PDF e-Manual

■Manuals related to GT Works3 add-on projects

Manual name	Manual number (Model code)	Format
GT Works3 Add-on License for GOT2000 Enhanced Drive Control (Servo) Project Data Manual (Fundamentals)	SH-082072ENG (1D7MV1)	PDF e-Manual
GT Works3 Add-on License for GOT2000 Enhanced Drive Control (Servo) Project Data Manual (Screen Details)	SH-082074ENG (1D7MV3)	PDF e-Manual

Manuals for GT Designer3 (GOT1000)

Refer to the Help and manuals for GT Designer3 (GOT1000).

Abbreviations, Generic Terms, and Model Icons

The following shows the abbreviations, generic terms, and model icons used in this manual.

GOT

■GOT2000 series

Abbreviations and generic terms			Description	Meaning of icon	
				Available	Unavailable
GT27	GT27-X	GT2715-X	GT2715-XTBA GT2715-XTBD	GT 27	-
	GT27-S	GT2712-S	GT2712-STBA GT2712-STWA GT2712-STBD GT2712-STWD		
		GT2710-S	GT2710-STBA GT2710-STBD		
		GT2708-S	GT2708-STBA GT2708-STBD		
	GT27-V	GT2710-V	GT2710-VTBA GT2710-VTWA GT2710-VTBD GT2710-VTWD		
		GT2708-V	GT2708-VTBA GT2708-VTBD		
		GT2705-V	GT2705-VTBD		
GT25			All GT25 models	GT 25	-
	GT25-W	GT2512-WX	GT2512-WXTBD GT2512-WXTSD	GT 25	-
		GT2510-WX	GT2510-WXTBD GT2510-WXTSD		
		GT2507-W	GT2507-WTBD GT2507-WTSD		
		GT2507T-W	GT2507T-WTSD		
	GT25-S	GT2512-S	GT2512-STBA GT2512-STBD		
		GT2512F-S	GT2512F-STNA GT2512F-STND		
	GT25-V	GT2510-V	GT2510-VTBA GT2510-VTWA GT2510-VTBD GT2510-VTWD		
		GT2510F-V	GT2510F-VTNA GT2510F-VTND		
		GT2508-V	GT2508-VTBA GT2508-VTWA GT2508-VTBD GT2508-VTWD		
		GT2508F-V	GT2508F-VTNA GT2508F-VTND		
		GT2505-V	GT2505-VTBD		
	GT25HS-V Handy GOT	GT2506HS-V	GT2506HS-VTBD	GT 2506 HS	-
		GT2505HS-V	GT2505HS-VTBD	GT 2505 HS	-
GT23	GT23-V	GT2310-V	GT2310-VTBA GT2310-VTBD	GT 23	-
		GT2308-V	GT2308-VTBA GT2308-VTBD		

Abbreviations and generic terms			Description	Meaning of icon	
				Available	Unavailable
GT21			All GT21 models		-
	GT21-W	GT2107-W	GT2107-WTBD GT2107-WTSD		-
	GT21-Q	GT2105-Q	GT2105-QTBDS GT2105-QMBDS		-
	GT21-R	GT2104-R	GT2104-RTBD		-
	GT21-P	GT2104-P	GT2104-PMBD		-
			GT2104-PMBDS		-
			GT2104-PMBDS2		-
			GT2104-PMBLS		-
		GT2103-P	GT2103-PMBD		-
			GT2103-PMBDS		-
			GT2103-PMBDS2		-
			GT2103-PMBLS		-
GT SoftGOT2000			GT SoftGOT2000 Version1		-

■GOT SIMPLE series

Abbreviations and generic terms		Description	Meaning of icon	
			Available	Unavailable
GS21	GS21-W-N	GS2110-WTBD-N GS2107-WTBD-N		-
	GS21-W	GS2110-WTBD GS2107-WTBD		

■GOT1000 series, GOT900 series, and GOT800 series

Abbreviations and generic terms	Description	Meaning of icon	
		Available	Unavailable
GOT1000 Series	GOT1000 Series	-	
GOT900 Series	GOT-A900 Series GOT-F900 Series	-	
GOT800 Series	GOT-800 Series	-	

Communication unit

Abbreviations and generic terms	Description
Bus connection unit	GT15-QBUS GT15-QBUS2 GT15-ABUS GT15-ABUS2 GT15-75QBUSL GT15-75QBUS2L GT15-75ABUSL GT15-75ABUS2L
Serial communication unit	GT15-RS2-9P GT15-RS4-9S GT15-RS4-TE
MELSECNET/H communication unit	GT15-J71LP23-25 GT15-J71BR13
CC-Link IE TSN communication unit	GT25-J71GN13-T2
CC-Link IE Controller Network communication unit	GT15-J71GP23-SX
CC-Link IE Field Network communication unit	GT15-J71GF13-T2
CC-Link communication unit	GT15-J61BT13
Wireless LAN communication unit	GT25-WLAN
Serial multi-drop connection unit	GT01-RS4-M
Connection conversion adapter	GT10-9PT5S
Field network adapter unit	GT25-FNADP
Ethernet communication unit	GT25-J71E71-100
RS-232/485 signal conversion adapter	GT14-RS2T4-9P

Option unit

Abbreviations and generic terms	Description
Printer unit	GT15-PRN
Video input unit	GT27-V4-Z (A set of GT16M-V4-Z and GT27-IF1000)
RGB input unit	GT27-R2 GT27-R2-Z (A set of GT16M-R2-Z and GT27-IF1000)
Video/RGB input unit	GT27-V4R1-Z (A set of GT16M-V4R1-Z and GT27-IF1000)
RGB output unit	GT27-ROUT GT27-ROUT-Z (A set of GT16M-ROUT-Z and GT27-IF1000)
Digital video output unit	GT27-VHOUT
Multimedia unit	GT27-MMR-Z (A set of GT16M-MMR-Z and GT27-IF1000)
Video signal conversion unit	GT27-IF1000
External I/O unit	GT15-DIO GT15-DIOR
Sound output unit	GT15-SOUT
SD card unit	GT21-03SDCD

Option

Abbreviations and generic terms	Description
SD card	NZ1MEM-2GBSD NZ1MEM-4GBSD NZ1MEM-8GBSD NZ1MEM-16GBSD L1MEM-2GBSD L1MEM-4GBSD
Battery	GT11-50BAT GT15-BAT
Protective sheet	GT27-15PSGC GT25-12WPSGC GT25-12PSGC GT25-10WPSGC GT25-10PSGC GT25-08PSGC GT21-07WPSGC GT25T-07WPSVC GT25-05PSGC GT25-05PSGC-2 GT21-05PSGC GT21-04RPSGC-UC GT21-03PSGC-UC GT21-04PSGC-UC GT27-15PSCC GT25-12WPSCC GT25-12PSCC GT25-10WPSCC GT25-10PSCC GT25-08PSCC GT25-05PSCC GT25-05PSCC-2 GT25-12PSCC-UC GT25-10PSCC-UC GT25-08PSCC-UC GT21-07WPSCC GT21-05PSCC GT21-04RPSCC-UC GT21-04PSCC-UC GT21-03PSCC-UC GT16H-60PSC GT14H-50PSC
Antibacterial/antiviral protective sheet	GT25-12PSAC GT25-10PSAC GT25-08PSAC
Environmental protection sheet	GT25F-12ESGS GT25F-10ESGS GT25F-08ESGS
Protective cover for oil	GT20-15PCO GT20-12PCO GT20-10PCO GT20-08PCO GT21-12WPCO GT21-10WPCO GT21-07WPCO GT25T-07WPCO GT25-05PCO GT25-05PCO-2 GT05-50PCO GT21-04RPCO GT10-30PCO GT10-20PCO
USB environmental protection cover	GT25-UCOV GT25-05UCOV GT21-WUCOV

Abbreviations and generic terms	Description
Stand	GT15-90STAND GT15-80STAND GT15-70STAND GT05-50STAND GT25-10WSTAND GT21-07WSTAND GT25T-07WSTAND
Attachment	GT15-70ATT-98 GT15-70ATT-87 GT15-60ATT-97 GT15-60ATT-96 GT15-60ATT-87 GT15-60ATT-77 GT21-04RATT-40
Panel-mounted USB port extension	GT14-C10EXUSB-4S GT10-C10EXUSB-5S
Connector conversion box	GT16H-CNB-42S GT16H-CNB-37S GT11H-CNB-37S
Emergency stop switch guard cover	GT16H-60ESCOV GT14H-50ESCOV
Wall-mounting attachment	GT14H-50ATT

Software

■Software related to GOT

Abbreviations and generic terms	Description
GT Works3	SW1DND-GTWK3-J, SW1DND-GTWK3-E, SW1DND-GTWK3-C
GT Designer3 Version1	Screen design software GT Designer3 for GOT2000 and GOT1000 series
GT Designer3	Screen design software for GOT2000 series included in GT Works3
GT Designer3 (GOT2000)	
GT Designer3 (GOT1000)	Screen design software for GOT1000 series included in GT Works3
Speech synthesis license	GT Works Text to Speech License (SW1DND-GTVO-M)
Add-on license	GT Works3 add-on license for GOT2000 enhanced drive control (servo) project data (SW1DND-GTSV-MZ)
GENESIS64 Advanced	GENESIS64 server application (GEN64-APP)
GENESIS64 Basic SCADA	GENESIS64 server application (GEN64-BASIC)
GENESIS64	Generic term of GENESIS64 Advanced and GENESIS64 Basic SCADA
GOT Mobile function license for GT SoftGOT2000	License required to use the GOT Mobile function with GT SoftGOT2000 (SGT2K-WEBSKEY-□)
GT Simulator3	Screen simulator GT Simulator3 for GOT2000, GOT1000, and GOT900 series
GT SoftGOT2000	GOT2000 compatible HMI software GT SoftGOT2000
GT OPC UA Client	MELSOFT GT OPC UA Client (SW1DNN-GTOUC-MD)
GT Converter2	Data conversion software GT Converter2 for GOT1000 and GOT900 series
GT Designer2 Classic	Screen design software GT Designer2 Classic for GOT900 series
GT Designer2	Screen design software GT Designer2 for GOT1000 and GOT900 series
DU/WIN	Screen design software FX-PCS-DU/WIN for GOT-F900 series

■Software related to iQ Works

Abbreviations and generic terms	Description
iQ Works	iQ Platform compatible engineering environment MELSOFT iQ Works
MELSOFT Navigator	Integrated development environment software included in SW□DND-IQWK (iQ Platform compatible engineering environment MELSOFT iQ Works) (□ represents a version.)
MELSOFT iQ AppPortal	SW□DND-IQAPL-M type integrated application management software (□ represents a version.)

■Other software

Abbreviations and generic terms		Description
GX Works3		SW□DND-GXW3-E (-EA, -EAZ) type programmable controller engineering software (□ represents a version.)
GX Works2		SW□DNC-GXW2-E (-EA, -EAZ) type programmable controller engineering software (□ represents a version.)
Controller simulator	GX Simulator3	Simulation function of GX Works3
	GX Simulator2	Simulation function of GX Works2
	GX Simulator	SW□D5C-LLT-E (-EV) type ladder logic test tool function software package (SW5D5C-LLT (-V) or later versions) (□ represents a version.)
GX Developer		SW□D5C-GPPW-E (-EV)/SW□D5F-GPPW (-V) type software package (□ represents a version.)
GX LogViewer		SW□DNN-VIEWER-E type software package (□ represents a version.)
MI Configurator		Configuration and monitor tool for Mitsubishi Electric industrial computers (SW□DNNMICONF-M) (□ represents a version.)
PX Developer		SW□D5C-FBDQ-E type FBD software package for process control (□ represents a version.)
MT Works2		Motion controller engineering environment MELSOFT MT Works2 (SW□DND-MTW2-E) (□ represents a version.)
MT Developer		SW□RNC-GSV type integrated start-up support software for motion controller Q series (□ represents a version.)
CW Configurator		Setting/monitoring tools for the C Controller module and MELSECWinCPU (SW□DND-RCCPU-E) (□ represents a version.)
MR Configurator2		SW□DNC-MRC2-E type servo configuration software (□ represents a version.)
MR Configurator		MRZJW□-SETUP type servo configuration software (□ represents a version.)
FR Configurator2		Inverter setup software (SW□DND-FRC2-E) (□ represents a version.)
FR Configurator		Inverter setup software (FR-SW□-SETUP-WE) (□ represents a version.)
NC Configurator2		CNC parameter setting support tool (FCSB1221)
NC Configurator		CNC parameter setting support tool
FX Configurator-FP		Parameter setting, monitoring, and testing software package for FX3U-20SSC-H (SW□D5CFXSSCE) (□ represents a version.)
FX Configurator-EN-L		FX3U-ENET-L type Ethernet module setting software (SW1D5-FXENETL-E)
FX Configurator-EN		FX3U-ENET type Ethernet module setting software (SW1D5C-FXENET-E)
RT ToolBox2		Robot program creation software (3D-11C-WINE)
RT ToolBox3		Robot program creation software (3F-14C-WINE)
MX Component		MX Component Version□ (SW□D5C-ACT-E, SW□D5C-ACT-EA) (□ represents a version.)
MX Sheet		MX Sheet Version□ (SW□D5C-SHEET-E, SW□D5C-SHEET-EA) (□ represents a version.)
CPU Module Logging Configuration Tool		CPU module logging configuration tool (SW1DNN-LLUTL-E)

License key (for GT SoftGOT2000)

Abbreviations and generic terms	Description
License key	GT27-SGTKEY-U

Others

Abbreviations and generic terms	Description
IAI	IAI Corporation
AZBIL	Azbil Corporation
OMRON	OMRON Corporation
KEYENCE	KEYENCE CORPORATION
KOYO EI	KOYO ELECTRONICS INDUSTRIES CO., LTD.
JTEKT	JTEKT CORPORATION
SHARP	Sharp Corporation
SHINKO	Shinko Technos Co., Ltd.
CHINO	CHINO CORPORATION
TOSHIBA	TOSHIBA CORPORATION
SHIBAURA MACHINE	SHIBAURA MACHINE CO., LTD.
PANASONIC	Panasonic Corporation
PANASONIC IDS	Panasonic Industrial Devices SUNX Co., Ltd.
HITACHI IES	Hitachi Industrial Equipment Systems Co., Ltd.
HITACHI	Hitachi, Ltd.
HIRATA	Hirata Corporation
FUJI	FUJI ELECTRIC CO., LTD.
MURATEC	Muratec products manufactured by Murata Machinery, Ltd.
YASKAWA	YASKAWA Electric Corporation
YOKOGAWA	Yokogawa Electric Corporation
RKC	RKC INSTRUMENT INC.
ALLEN-BRADLEY	Allen-Bradley products manufactured by Rockwell Automation, Inc.
CLPA	CC-Link Partner Association
GE	GE Intelligent Platforms, Inc.
HMS	HMS Industrial Networks
LS IS	LS Industrial Systems Co., Ltd.
MITSUBISHI INDIA	Mitsubishi Electric India Pvt. Ltd.
ODVA	Open DeviceNet Vendor Association, Inc.
SCHNEIDER	Schneider Electric SA
SICK	SICK AG
SIEMENS	Siemens AG
SCHNEIDER EJH	Schneider Electric Japan Holdings Ltd.
PLC	Programmable controller manufactured by its respective company
Control equipment	Control equipment manufactured by its respective company
Temperature controller	Temperature controller manufactured by its respective company
Indicating controller	Indicating controller manufactured by its respective company
Controller	Controller manufactured by its respective company
Industrial switch (for CC-Link IE TSN Class B)	CC-Link IE TSN Class B (Synchronized Realtime Communication) hub certified by CC-Link Partner Association
Industrial switch (for CC-Link IE TSN Class A)	CC-Link IE TSN Class A (Realtime Communication) hub certified by CC-Link Partner Association
CC-Link IE TSN-equipped module	Generic term for the following CC-Link IE TSN master/local modules and CC-Link IE TSN Plus master/local module • RJ71GN11-T2 • RJ71GN11-EIP • FX5-CCLGN-MS

PART 1 PREPARATORY PROCEDURES FOR MONITORING

1 PREPARATORY PROCEDURES FOR MONITORING

- Page 31 Setting the Communication Interface
- Page 51 Writing the Project Data onto the GOT
- Page 53 Option Devices for the Respective Connection
- Page 58 Connection Cables for the Respective Connection
- Page 68 Verifying GOT Recognizes Connected Equipment
- Page 70 Checking for Normal Monitoring

The following shows the procedures to be taken before monitoring and corresponding reference sections.

1. Setting the communication interface

Determine the connection type and channel No. to be used, and perform the communication setting.

☞ Page 31 Setting the Communication Interface

☞ Each chapter GOT Side Settings

2. Writing the project data and OS

Write the standard monitor OS, communication driver, extended function OS, project data and communication settings onto the GOT.

☞ Page 51 Writing the project data onto the GOT

3. Verifying the project data and OS

Verify the standard monitor OS, communication driver, extended function OS, project data and communication settings are properly written onto the GOT.

☞ Page 52 Checking the project data and OS writing on GOT

4. Attaching the communication unit and connecting the cable

Mount the optional equipment and prepare/connect the connection cable according to the connection type.

☞ Page 53 Option Devices for the Respective Connection

☞ Page 58 Connection Cables for the Respective Connection

☞ Each chapter System Configuration

☞ Each chapter Connection Diagram

5. Verifying GOT recognizes connected equipment

Verify the GOT recognizes controllers on [Communication Settings] of the Utility.

☞ Page 68 Verifying GOT Recognizes Connected Equipment

6. Verifying the GOT is monitoring normally

Verify the GOT is monitoring normally using Utility, Developer, etc.

☞ Page 70 Checking for Normal Monitoring

1.1 Setting the Communication Interface

Set the communication interface of GOT and the connected equipment.

When using the GOT at the first time, make sure to set the channel of communication interface and the communication driver before writing to GOT.

Set the communication interface of the GOT at [Controller Setting] and [I/F Communication Setting] in GT Designer3.

Setting connected equipment (Channel setting)

Set the channel of the equipment connected to the GOT.

Setting

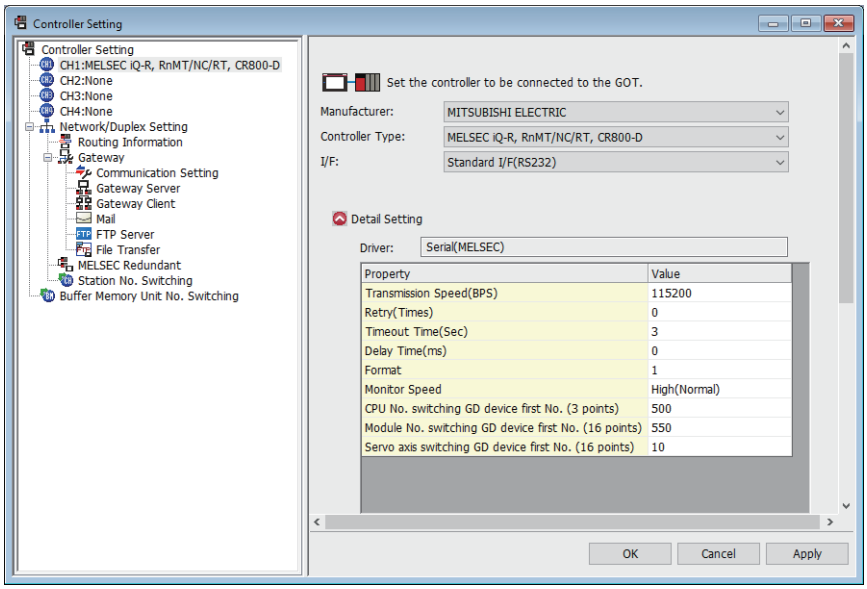

1. Select [Common] → [Controller Setting] from the menu.
2. The Controller Setting dialog box appears. Select the channel No. to be used from the list menu.
3. Refer to the following explanations for the setting.

Point

Channel No.2 to No.4

Use the channel No.2 to No.4 when using the Multi-channel function.

For details of the Multi-channel function, refer to the following.

GOT2000 Series Connection Manual (Mitsubishi Electric Products) For GT Works3 Version1

Setting item

This section describes the setting items of the Manufacturer, Controller Type, Driver and I/F.

When using the channel No.2 to No.4, put a check mark at [Use CH*].

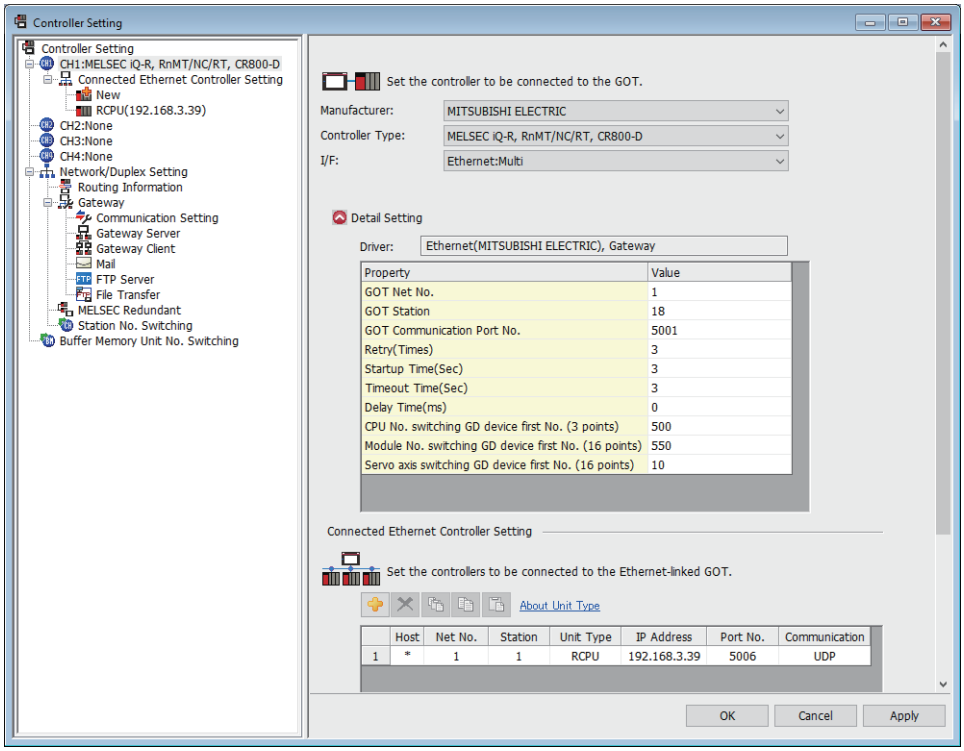

Item	Description
Use CH*	Select this item when setting the channel No.2 to No.4.
Manufacturer	Select the manufacturer of the equipment to be connected to the GOT.
Type	Select the type of the equipment to be connected to the GOT. For the settings, refer to the following. ☞ Page 33 Setting [Controller Type]
I/F	Select the interface of the GOT to which the equipment is connected. For the settings, refer to the following. ☞ Page 43 Setting [I/F]
Driver	Select the communication driver to be written to the GOT. For the settings, refer to the following. ☞ Page 32 Setting [Driver] When multiple communication drivers can be selected, this item is displayed. When only one communication driver can be selected, the driver name is displayed under [Detail Setting].
Detail Setting	Make settings for the transmission speed and data length of the communication driver. ☞ Refer to each chapter of the equipment to be connected to the GOT.

■Setting [Driver]

The displayed items for a driver differ according to the settings [Manufacturer], [Controller Type] and [I/F].

When the driver to be set is not displayed, confirm if [Manufacturer], [Controller Type] and [I/F] are correct.

For the settings, refer to the following.

☞ [Setting the communication interface] section in each chapter

■Setting [Controller Type]

The type differs depending on the PLC to be used.

For the settings, refer to the following.

Type	Model name
[HITACHI IES EHV]	EHV-CPU08
	EHV-CPU16
	EHV-CPU32
	EHV-CPU64
	EHV-CPU128
	MVH-A40□□□
	MVH-D40□□□
	MVH-A64□□□
	MVH-D64□□□
[HITACHI IES HIDIC H]	H-302
	H-702
	H-1002
	H-2002
	H-4010
	H-300
	H-700
	H-2000
	H-200
	H-250
	H-252
	H-252B
	H-252C
	H-20DR
	H-28DR
	H-40DR
	H-64DR
	H-20DT
	H-28DT
	H-40DT
	H-64DT
	HL-40DR
	HL-64DR
	EH-CPU104
	EH-CPU208
	EH-CPU308
	EH-CPU316
	EH-CPU516
	EH-CPU548
[HITACHI S10VE]	LQP600
[HITACHI S10mini/S10V]	LQP510
	LQP520
	LQP800
	LQP000
	LQP010
	LQP011
	LQP120

Type	Model name
[FUJI Temperature Controller/Digital Controller]	PXF4
	PXF5
	PXF9
	PXR3
	PXR4
	PXR5
	PXR9
	PXG4
	PXG5
	PXG9
	PXH9
	PUMA
	PUMB
[FUJI MICREX-F]	F55
	F70
	F120S
	F140S
	F15□S
[FUJI MICREX-SX SPH]	SPH200
	SPH300
	SPH2000
	SPH3000
[YASKAWA GL/PROGIC8]	PROGIC-8
	GL120
	GL130
	GL60S
	GL60H
	GL70H
[YASKAWA CP-9200 (H)]	CP-9200(H)
[YASKAWA CP-9300MS (MC compatible)]	CP-9300MS
[YASKAWA MP2000/MP900/CP9200SH]	MP2200
	MP2300
	MP2300S
	MP920
	MP930
	MP940
	CP-9200SH
	CP-312
	CP-317
[YASKAWA MP3000]	MP3200
	MP3300
[YASKAWA Robot Controller]	YRC1000
	YRC1000micro

Type	Model name
[YOKOGAWA STARDOM/FA500/FA-M3]	FA500
	F3SP05
	F3SP08
	F3SP10
	F3SP20
	F3SP30
	F3FP36
	F3SP21
	F3SP22-0S
	F3SP25
	F3SP35
	F3SP28
	F3SP38
	F3SP53
	F3SP58
	F3SP59
	F3SP66
	F3SP67
	F3SP71-4N
	F3SP71-4S
	F3SP76-7S
	NFCP100
	NFJT100

Type	Model name
[YOKOGAWA GREEN/UT100/UT2000/UTAdvanced]	UT320
	UT321
	UT350
	UT351
	UT420
	UT450
	UT520
	UT550
	UT551
	UT750
	UP350
	UP351
	UP550
	UP750
	UM330
	UM331
	UM350
	UM351
	US1000
	UT130
	UT150
	UT152
	UT155
	UP150
	UT2400
	UT2800
	UT32A
	UT35A
	UT52A
	UT55A
	UT75A
	UP32A
	UP35A
	UP55A
	UM33A

Type	Model name
[RKC SR Mini HG]	H-PCP-J
	H-PCP-A
	H-PCP-B
	Z-TIO
	Z-DIO
	Z-CT
	Z-COM
	J-TI-A/B
	CB100
	CB400
	CB500
	CB700
	CB900
	FB100
	FB400
	FB900
	RB100
	RB400
	RB500
	RB700
	RB900
	PF900
	PF901
	HA400
	HA401
	HA900
	HA901
	RMC500
	MA900
	MA901
	AG500
	THV-A1
	SA100
	SA200
	X-TIO
	SB1
	B400
	FZ110
	FZ400
	FZ900
	RZ100
	RZ400
	PZ400
	PZ900
	GZ400
	GZ900

Type	Model name
[AB SLC500]	SLC500-20
	SLC500-30
	SLC500-40
	SLC5/01
	SLC5/02
	SLC5/03
	SLC5/04
	SLC5/05
[AB MicroLogix]	1761-L10BWA
	1761-L10BWB
	1761-L16AWA
	1761-L16BWA
	1761-L16BWB
	1761-L16BBB
	1761-L32AWA
	1761-L32BWA
	1761-L32BWB
	1761-L32BBB
	1761-L32AAA
	1761-L20AWA-5A
	1761-L20BWA-5A
	1761-L20BWB-5A
	1763-L16BWA
	1762-L24BWA
	1766-L32AWA
	1764-LSP
	1764-LRP

Type	Model name
[AB Control/CompactLogix]	1756-L
	1756-L1M1
	1756-L1M2
	1756-L1M3
	1756-L61
	1756-L62
	1756-L63
	1756-L64
	1756-L55M12
	1756-L55M13
	1756-L55M14
	1756-L55M16
	1756-L55M22
	1756-L55M23
	1756-L55M24
	1769-L31
	1769-L32E
	1769-L32C
	1769-L35E
	1769-L35CR
	1794-L33
	1794-L34
	1756-L72S
	1756-L71
	1756-L72
	1756-L73
	1756-L74
	1756-L75
	1756-L81E
	1756-L82E
	1756-L83E
	1756-L84E
	1756-L85E

Type	Model name
[AB Control/CompactLogix (Tag)]	1756-L
	1756-L1M1
	1756-L1M2
	1756-L1M3
	1756-L61
	1756-L62
	1756-L63
	1756-L64
	1756-L55M12
	1756-L55M13
	1756-L55M14
	1756-L55M16
	1756-L55M22
	1756-L55M23
	1756-L55M24
	1769-L32E
	1769-L35E
	1794-L33
	1794-L34
	1756-L72S
	1756-L71
	1756-L72
	1756-L73
	1756-L74
	1756-L75
	1756-L81E
	1756-L82E
	1756-L83E
	1756-L84E
	1756-L85E

Type	Model name
[GE Series 90]	IC693CPU311
	IC693CPU313
	IC693CPU323
	IC693CPU350
	IC693CPU360
	IC693CPU363
	IC693CPU366
	IC693CPU367
	IC693CPU374
	IC697CPU731
	IC697CPX772
	IC697CPX782
	IC697CPX928
	IC697CPX935
	IC697CPU780
	IC697CGR772
	IC697CGR935
	IC697CPU788
	IC697CPU789
	IC697CPM790
	IC200UAA003
	IC200UAL004
	IC200UAL005
	IC200UAL006
	IC200UAA007
	IC200UAR028
	IC200UDD110
	IC200UDD120
	IC200UDD212
	IC200UDR005
	IC200UDR006
	IC200UDR010
	IC200UDD064
	IC200UDD164
	IC200UDR164
	IC200UDR064
	IC200UAR014
	IC200UDD104
	IC200UDD112
	IC200UDR001
	IC200UDR002
	IC200UDR003
LS Industrial Systems XGK	XGK-CPUU
	XGK-CPUH
	XGK-CPUA
	XGK-CPUS
	XGK-CPUE
	XGK-CPUUN
	XGK-CPUHN
	XGK-CPUSN

Type	Model name
[LS Industrial Systems MASTER-K]	K7M-D□□□S(/DC)
	K7M-D□□□U
	K3P-07□S
	K4P-15AS
[MEI Nexgenie]	NG16DL
	NG16ADL
	NG14RL
	NG16DN
	NG16ADN
	NG14RN
	P2210
	P2211
	P2213A
	P2214
[SICK Flexi Soft]	FX3-CPU000000
	FX3-CPU130002
	FX3-CPU320002
<For GT27, GT25, and GT23> [SIEMENS S7-200] <For GT21 and GS21> [SIEMENS S7-200(CN/SMART)]	SIMATIC S7-200
	SIMATIC S7-200 SMART
	SIMATIC S7-200 CN
[SIEMENS S7-300/400]	SIMATIC S7-300
	SIMATIC S7-400
[SIEMENS S7(Ethernet)]	SIMATIC S7-300
	SIMATIC S7-400
[SIEMENS OP(Ethernet)]	SIMATIC S7-200
	SIMATIC S7-200 SMART
	SIMATIC S7-300
	SIMATIC S7-400
	SIMATIC S7-1200
	SIMATIC S7-1500

■Setting [I/F]

The interface differs depending on the GOT to be used.

Set the I/F according to the connection and the position of communication unit to be mounted onto the GOT.

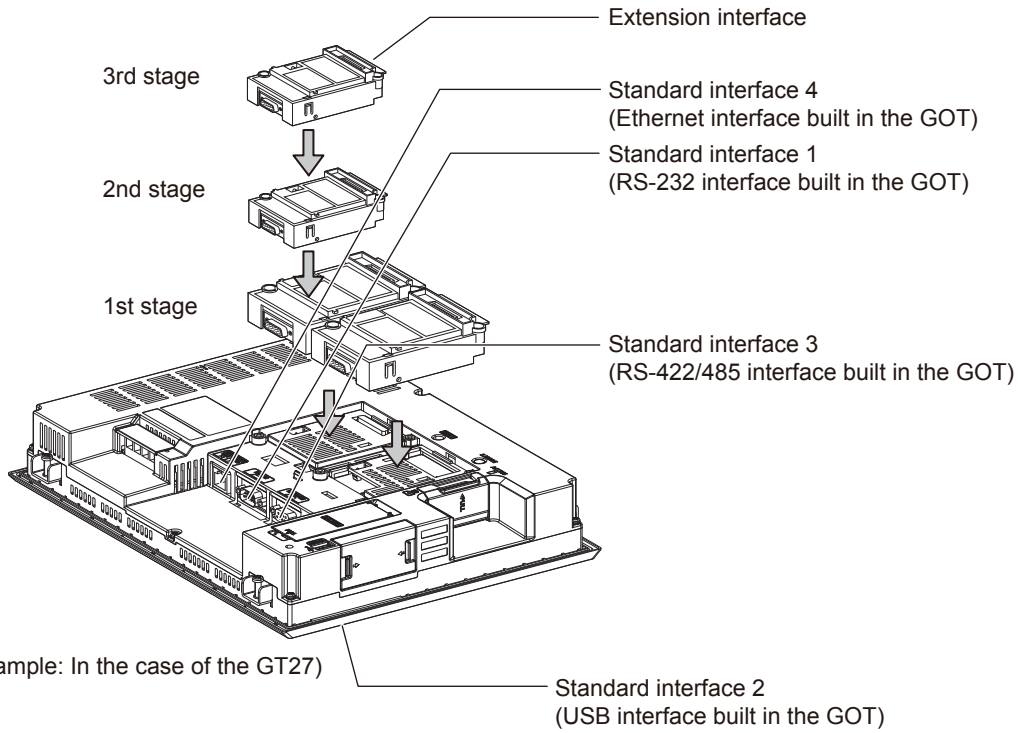

(Example: In the case of the GT27)

GOT Ethernet Setting

The GOT can be connected to a different network by using the following network.

1) GOT IP Address Setting

Set the following communication port setting.

Standard port (When using GT25-W, port 1)

Set [GOT IP Address] and [Subnet Mask] in the standard port with a built-in GOT, or port 1.

Extension port (When using GT25-W, port 2)

Set [GOT IP Address] and [Subnet Mask] in the extension port (the Ethernet interface for the Ethernet communication module), or port 2 with a built-in GOT.

When using the GOT other than GT25-W, BootOS Version Z or later is required to use the extension port.

For details on writing the BootOS, refer to the following manual.

GT Designer3 (GOT2000) Screen Design Manual

Wireless LAN

Set [GOT IP Address], [Subnet Mask], [Peripheral S/W Communication Port No.], and [Transparent Port No.] for the wireless LAN interface.

2) GOT Ethernet Common Setting

Set the following setting which is common to the standard port and the extension port, or port 1 and port 2.

- [Default Gateway]
- [Peripheral S/W Communication Port No.]
- [Transparent Port No.]

3) IP Filter Setting

By configuring the IP filter setting, the access from the specific IP address can be permitted or shut off.

GOT IP Address Setting

Set the GOT IP address.

■[Standard Port] or [Port 1]

The following shows an example for [Standard Port].

1. Select [Common] → [GOT Ethernet Setting] → [GOT IP Address Setting] from the menu to display the [GOT Ethernet Setting] window.

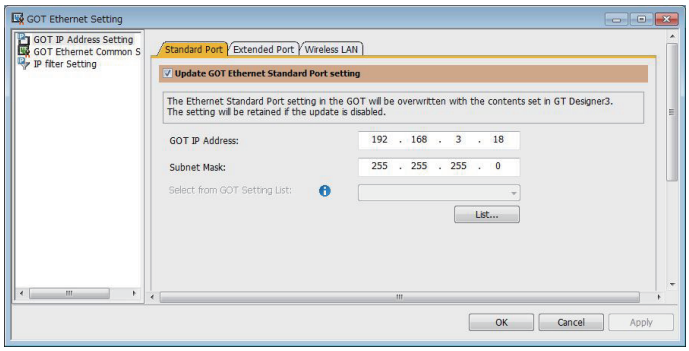

2. On the [Standard Port] tab, configure the following settings.

Item	Description	Range
Update GOT Ethernet standard port setting	The GOT Ethernet standard port settings are applied on GOT.	-
GOT IP Address	Set the IP address of the GOT IP Address. (Default:192.168.3.18)	0.0.0.0 to 255.255.255.255
Subnet Mask	Set the subnet mask for the sub network. (Only for connection via router) If the sub network is not used, the default value is set. (Default: 255.255.255.0)	0.0.0.0 to 255.255.255.255
Select from GOT Setting List	Select the GOT set in [GOT Setting List] dialog. GT Designer3 (GOT2000) Screen Design Manual	-

■[Extended Port], or [Port 2]

The following shows an example for [Extended Port].

1. Select [Common] → [GOT Ethernet Setting] → [GOT IP Address Setting] from the menu to display the [GOT Ethernet Setting] window.

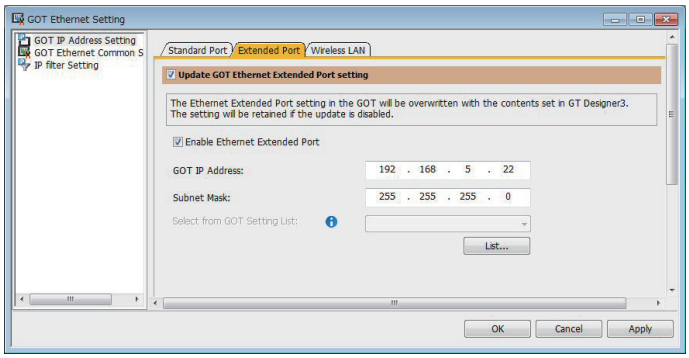

2. On the [Extended Port] tab, configure the following settings.

Item	Description	Range
Update GOT Ethernet extended port setting	The GOT Ethernet extended port settings are applied on GOT.	-
Enable Ethernet extended port	Enable the ethernet extended port.	-
GOT IP Address	Set the IP address of the GOT IP Address. (Default:192.168.5.22)	0.0.0.0 to 255.255.255.255
Subnet Mask	Set the subnet mask for the sub network. (Only for connection via router) If the sub network is not used, the default value is set. (Default: 255.255.255.0)	0.0.0.0 to 255.255.255.255
Select from GOT Setting List	Select the GOT set in [GOT Setting List] dialog. GT Designer3 (GOT2000) Screen Design Manual	-

■[Wireless LAN]

1. Select [Common] → [GOT Ethernet Setting] → [GOT IP Address Setting] from the menu to display the [GOT Ethernet Setting] window.

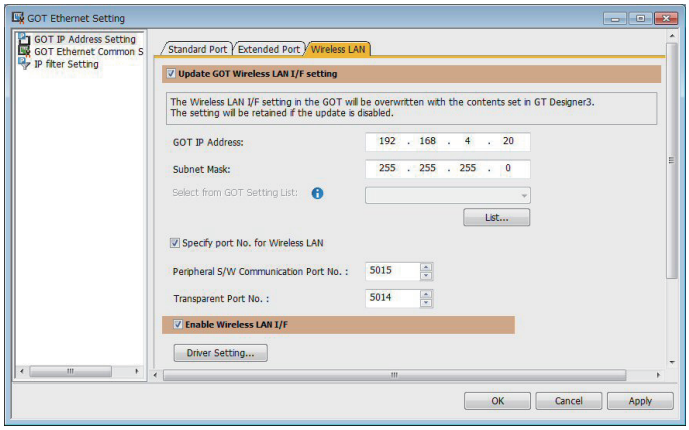

2. On the [Wireless LAN] tab, configure the following settings.

Item	Description	Range
Update GOT Wireless LAN I/F setting	The wireless LAN interface settings are applied on GOT.	-
Enable Wireless LAN I/F	Enable the wireless LAN.	-
GOT IP Address	Set the IP address of the wireless LAN I/F. (Default:192.168.4.20)	0.0.0.0 to 255.255.255.255
Subnet Mask	Set the subnet mask for the sub network. (Only for connection via router) If the sub network is not used, the default value is set. (Default: 255.255.255.0)	0.0.0.0 to 255.255.255.255
Select from GOT Setting List	Select the GOT set in [GOT Setting List] dialog. GT Designer3 (GOT2000) Screen Design Manual	-
Specify port No. for Wireless LAN	Enable the port number setting for the wireless LAN separately from GOT Ethernet common setting.	-
Peripheral S/W Communication Port No.	Set the GOT port No. for the communication with the peripheral S/W. (Default: 5015)	1024 to 65534 (Except for 5011 to 5013, 49153 to 49170)
Transparent Port No.	Set the GOT port No. for the transparent function. (Default: 5014)	1024 to 65534 (Except for 5011 to 5013, 49153 to 49170)
Driver setting	Display [Detail Settings] dialog, GT Designer3 (GOT2000) Screen Design Manual	-

Point

GOT IP address

For GOT IP address of each Ethernet setting, set a value that network system is different from each other.

(When the subnet mask is [255.255.255.0])

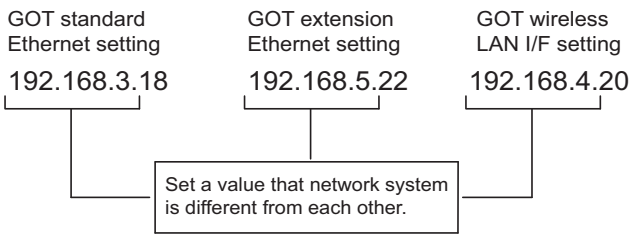

GOT Ethernet Common Setting

Set the following setting which is common to the standard port and the extension port, or port 1 and port 2.

1. Select [Common] → [GOT Ethernet Setting] → [GOT Ethernet Common Setting] from the menu to display the [GOT Ethernet Setting] window.

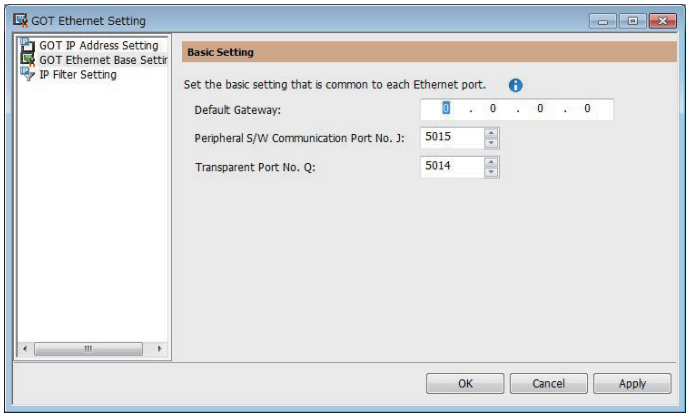

2. Configure the following settings.

Item	Description	Range
Default Gateway	Set the router address of the default gateway where the GOT is connected. (Only for connection via router) (Default: 0.0.0.0)	0.0.0.0 to 255.255.255.255
Peripheral S/W Communication Port No.	Set the GOT port No. for the communication with the peripheral S/W. (Default: 5015)	1024 to 65534 (Except for 5011 to 5013, 49153 to 49170)
Transparent Port No.	Set the GOT port No. for the transparent function. (Default: 5014)	1024 to 65534 (Except for 5011 to 5013, 49153 to 49170)

IP Filter Setting

1. Select [Common] → [GOT Ethernet Setting] → [IP Filter Setting] from the menu to display the [GOT Ethernet Setting] window.

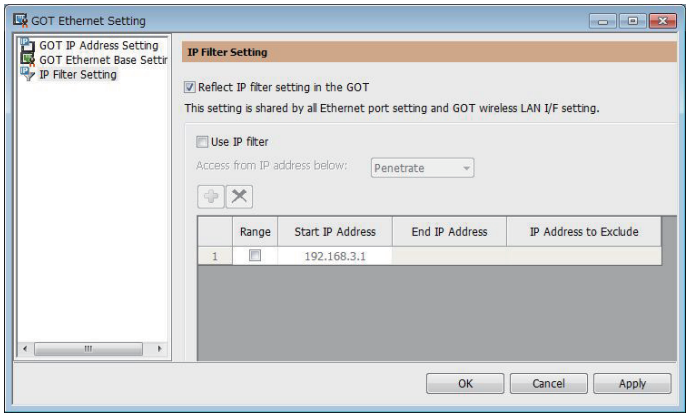

2. For the detailed settings, refer to the following manual.

GT Designer3 (GOT2000) Screen Design Manual

I/F communication setting

This function displays the list of the GOT communication interfaces.

Set the channel and the communication driver to the interface to be used.

Setting

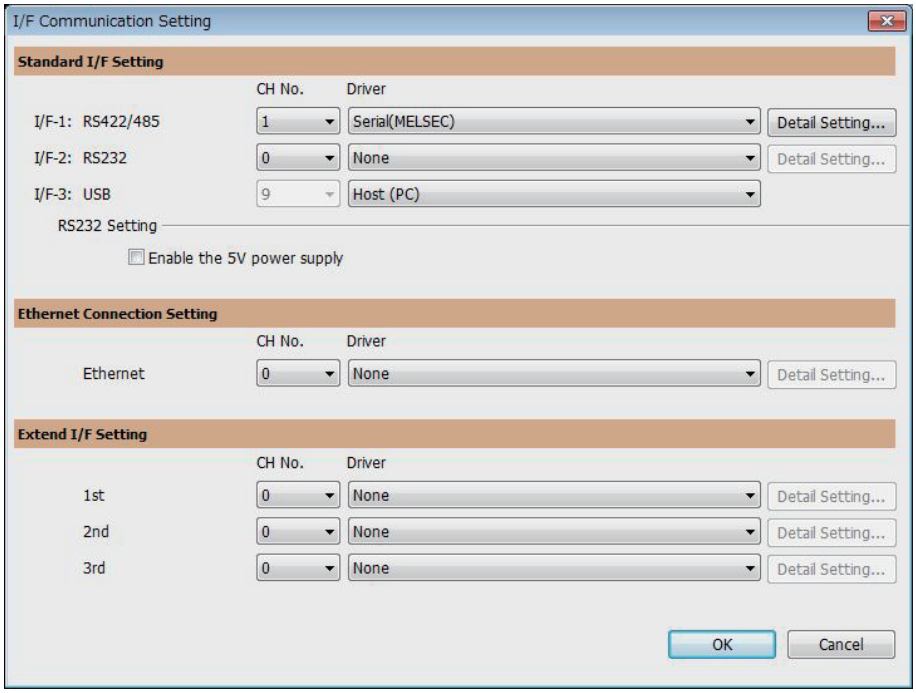

1. Select [Common] → [I/F Communication Setting] from the menu.
2. The I/F Communication Setting dialog box appears. Make the settings with reference to the following explanation.

Setting item

The following describes the setting items for the standard I/F setting and extension I/F setting.

For the detailed explanations, refer to the following manual.

GT Designer3 (GOT2000) Screen Design Manual

When GT2104-P or GT2103-P is selected in the GOT type setting

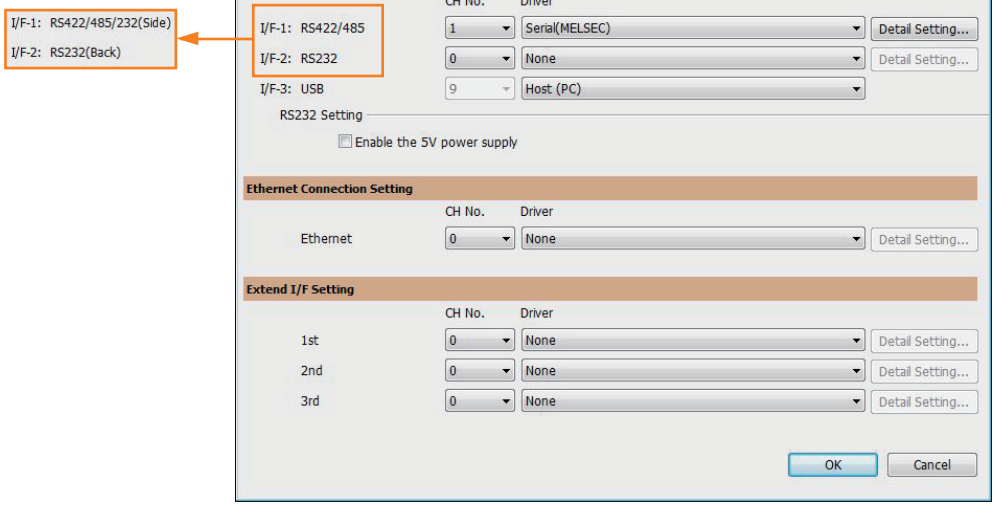

Item	Description	
Standard I/F Setting	Set channel No. and drivers to the GOT standard interfaces.	
	CH No.	Set the CH No. according to the intended purpose. 0: Not used 1 to 4: Used for connecting a controller of channel No. 1 to 4 set in Setting connected equipment (Channel setting) 5 to 8: Used for barcode function, RFID function, remote personal computer operation function (serial) A: Used for the report function (with a serial printer), hard copy function (with a serial printer).
	Driver	Set the driver for the device to be connected. • Each communication driver suitable to the channel numbers • Each communication driver for connected devices
	Detail Setting	Set the detailed settings for the communication driver. ☞ Refer to each chapter of the equipment to be connected to the GOT.
	I/F-1,I/F-2,I/F-3	The communication type of the GOT standard interface is displayed.
	RS232 Setting	To validate the 5V power supply function in RS232, mark the [Enable the 5V power supply] checkbox. The RS232 setting is invalid when the CH No. of [I/F-1: RS232] is [9]. Not applicable to GT21 and GS21.
Ethernet Connection Setting	Set the channel number and the communication driver to the Ethernet interface with a built-in GOT.	
	CH No.	Set the CH No. according to the intended purpose. 0: Not used 1 to 4: Used for connecting a controller of channel No. 1 to 4 set in Setting connected equipment (Channel setting) 9: Used for connecting Host (PC) or Ethernet download A: Used for the remote personal computer operation function (Ethernet), VNC server function, gateway function, and MES interface function. Multi: Used for multi-channel Ethernet connection
	Driver	Set the driver for the device to be connected. • Each communication driver suitable to the channel numbers • Each communication driver for connected devices
	Detail Setting	Set the detailed settings for the communication driver. ☞ Refer to each chapter of the equipment to be connected to the GOT.

Item	Description	
Extend I/F Setting	Set the communication unit attached to the extension interface of the GOT. Not applicable to GT21 and GS21.	
	CH No.	Set the CH No. according to the intended purpose. The number of channels differs depending on the GOT to be used. 0: Not used 1 to 4: Used for the controllers of channel numbers 1 to 4 set in controller setting (channel setting). 5 to 8: Used for the barcode function, the RFID function, and the remote personal computer operation function (Serial). A: Used for the video/RGB display function, multimedia function, external I/O function, operation panel function, video output function, report function, hard copy function (with a printer), and sound output function.
	Driver	Set the driver for the device to be connected. • Each communication driver suitable to the channel numbers • Each communication driver for connected devices
	Detail Setting	Set the detailed settings for the communication driver. ☞ Refer to each chapter of the equipment to be connected to the GOT.

Point

Channel No., drivers, [RS232 Setting]

• Channel No.2 to No.4

Use the channel No.2 to No.4 when using the Multi-channel function.

For details of the Multi-channel function, refer to the following.

📖GOT2000 Series Connection Manual (Mitsubishi Electric Products) For GT Works3 Version1

• Drivers

The displayed items for a driver differ according to the settings [Manufacturer], [Controller Type] and [I/F].

When the driver to be set is not displayed, confirm if [Manufacturer], [Controller Type] and [I/F] are correct.

☞ [Setting the communication interface] section in each chapter

Precautions

Precautions for changing model

■When devices that cannot be converted are included.

When setting of [Manufacturer] or [Controller Type] is changed, GT Designer3 displays the device that cannot be converted (no corresponding device type, or excessive setting ranges) as [??]. In this case, set the device again.

■When the changed Manufacturer or Controller Type does not correspond to the network.

The network will be set to the host station.

■When the Manufacturer or Controller Type is changed to [None]

The GT Designer3 displays the device of the changed channel No. as [??]. In this case, set the device again.

Since the channel No. is retained, the objects can be reused in other channel No. in a batch by using the [Device Bach Edit], [CH No. Batch Edit] or [Device List].

1.2 Writing the Project Data onto the GOT

Write the package data onto the GOT.

For details on writing to GOT, refer to the following manual.

GT Designer3 (GOT2000) Screen Design Manual

Writing the project data onto the GOT

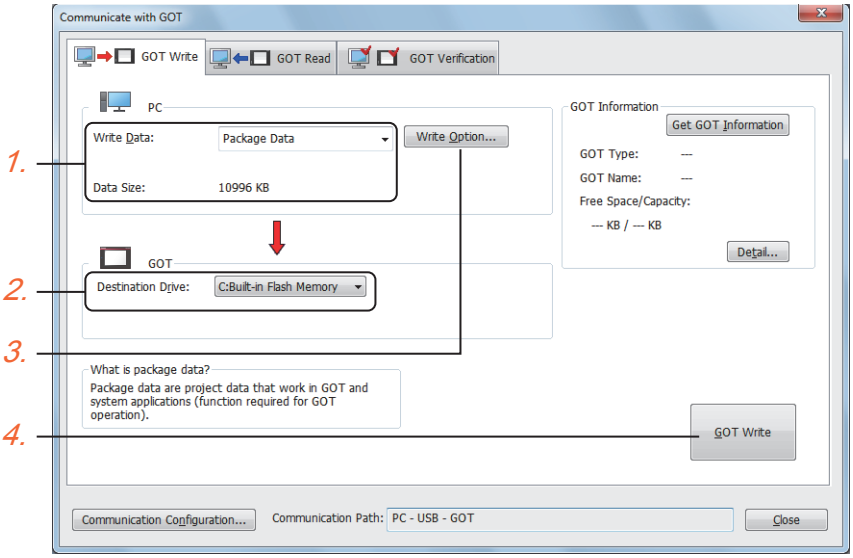

1. Select [Package Data] for [Write Data].

The capacity of the transfer data is displayed in [Data Size]. Check that the destination drive has the sufficient available space.

2. Select [Destination Drive].

3. When the system application or the special data is required to be added to the package data or deleted, click the [Write Option] button and configure the setting in the [Write Option] dialog.

4. Click the [GOT Write] button.

5. The package data is written to the GOT.

Checking the project data and OS writing on GOT

Confirm if the package data is properly written onto the GOT by reading from GOT using GT Designer3.

For reading from the GOT, refer to the following manual.

GT Designer3 (GOT2000) Screen Design Manual

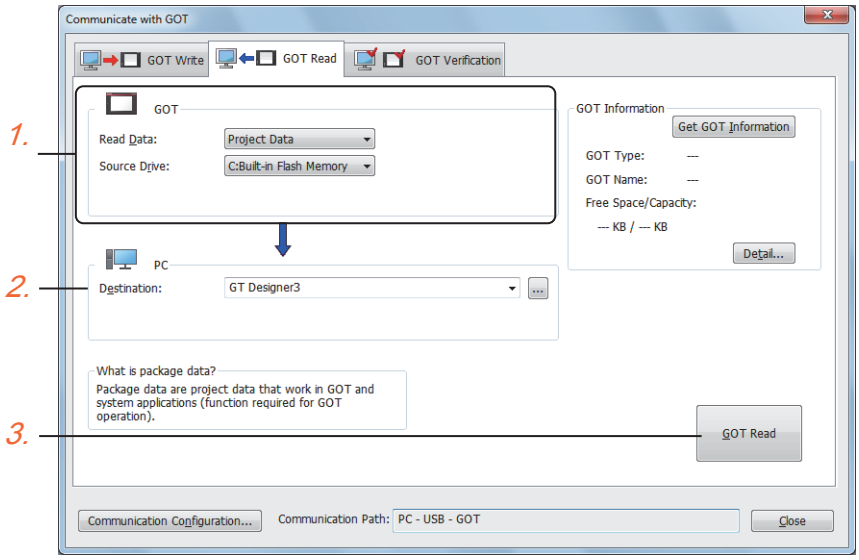

1. Set [GOT Side] as follows.

- Select [Project Data] or [Package Data] for [Read Data].
- Select the drive where the project data or the package data is stored for [Source Drive].

2. Set [PC Side].

Set the reading destination of the project for [Destination].

To read the project data to GT Designer3, select [GT Designer3].

(When [Read Data] is [Package Data], the project data cannot be read to GT Designer3.)

To read the project data as a file, click the [...] button to set the saving format and the saving destination of the file.

3. Click the [GOT Read] button.

4. The project is read.

5. Confirm that the project data is written correctly onto the GOT.

1.3 Option Devices for the Respective Connection

The following shows the option devices to connect in the respective connection type.
For the specifications, usage and connecting procedure on option devices, refer to the respective device manual.

Communication module

Product name	Model	Specifications
Bus connection unit	GT15-QBUS	For QCPU (Q mode), Motion CPU (Q series) Bus connection (1ch) unit standard model
	GT15-QBUS2	For QCPU (Q mode), Motion CPU (Q series) Bus connection (2ch) unit standard model
	GT15-ABUS	For A/QnACPU, Motion CPU (A series) Bus connection (1ch) unit standard model
	GT15-ABUS2	For A/QnACPU, Motion CPU (A series) Bus connection (2ch) unit standard model
	GT15-75QBUSL	For QCPU (Q mode), Motion CPU (Q series) Bus connection (1ch) unit slim model
	GT15-75QBUS2L	For QCPU (Q mode), Motion CPU (Q series) Bus connection (2ch) unit slim model
	GT15-75ABUSL	For A/QnACPU, Motion CPU (A series) Bus connection (1ch) unit slim model
	GT15-75ABUS2L	For A/QnACPU, Motion CPU (A series) Bus connection (1ch) unit slim model
Serial communication unit	GT15-RS2-9P	RS-232 serial communication unit (D-sub 9-pin (male))
	GT15-RS4-9S	RS-422/485 serial communication unit (D-sub 9-pin (female))
	GT15-RS4-TE	RS-422/485 serial communication unit (terminal block)
MELSECNET/H communication unit	GT15-J71LP23-25	Optical loop unit
	GT15-J71BR13	Coaxial bus unit
MELSECNET/10 communication unit	GT15-J71LP23-25	Optical loop unit (MELSECNET/H communication unit used in the MNET/10 mode)
	GT15-J71BR13	Coaxial bus unit (MELSECNET/H communication unit used in the MNET/10 mode)
CC-Link IE TSN communication unit	GT25-J71GN13-T2	Local station (device station)
CC-Link IE Controller Network communication unit	GT15-J71GP23-SX	Optical loop unit
CC-Link IE Field Network communication unit	GT15-J71GF13-T2	CC-Link IE Field Network (1000BASE-T) unit
CC-Link communication unit	GT15-J61BT13	Intelligent device station unit CC-LINK Ver. 2 compatible
Ethernet communication unit	GT25-J71E71-100	Ethernet (100Base-TX) unit
Wireless LAN communication unit[*1][*2]	GT25-WLAN	• Used for the connection to the IEEE802.11b/g/n compliant, built-in antenna, access point (master unit), station (slave unit), personal computers, tablets, and smartphones. • Compliance with Japan Radio Law[*3], FCC[*4], RE[*6] (R&TTE[*4]), SRRC[*5], KC[*5], Radio Equipment Regulations (UKCA)[*7]

*1 Data transfer in wireless LAN communication may not be as stable as that in cable communication.
A packet loss may occur depending on the surrounding environment and the installation location.
Be sure to perform a confirmation of operation before using this product.

*2 When [Operation Mode] is set to [Access Point] in [Wireless LAN Setting] of GT Designer3, up to five stations are connectable to the wireless LAN access point (base station).

*3 The product with hardware version A or later (manufactured in December 2013) complies with the regulation.
The product with hardware version A can be used only in Japan.
For information on how to check the hardware version, refer to the following.
GOT2000 Series User's Manual (Hardware)

*4 The product with hardware version B or later (manufactured from October 2014) complies with the regulation.
The product with hardware version B or later can be used in Japan, the United States, the EU member states, Switzerland,Norway, Iceland, and Liechtenstein.
For information on how to check the hardware version, refer to the following.
GOT2000 Series User's Manual (Hardware)

*5 The product with hardware version D or later (manufactured from May 2016) complies with the regulation.
The product with hardware version D or later can be used in Japan, the United States, the EU member states, Switzerland,Norway, Iceland, Liechtenstein, China (excluding Hong Kong, Macao, and Taiwan), and South Korea.
For information on how to check the hardware version, refer to the following.
GOT2000 Series User's Manual (Hardware)

*6 The product complies with the RE Directive from March 31, 2017.

*7 The product with hardware version G or later (manufactured from October 2021) complies with the regulation.
The product with hardware version G or later can be used in Japan, the United States, the EU member states, the UK, Switzerland, Norway, Iceland, Liechtenstein, China (excluding Hong Kong, Macao, and Taiwan), and South Korea.

Option unit

Product name	Model	Specifications
Multimedia unit	GT27-MMR-Z	For video input signal (NTSC/PAL) 1 ch, playing movie
Video input unit	GT27-V4-Z	For video input signal (NTSC/PAL) 4 ch
RGB input unit	GT27-R2 GT27-R2-Z	For analog RGB input signal 2 ch
Video/RGB input unit	GT27-V4R1-Z	For video input signal (NTSC/PAL) 4 ch, for analog RGB mixed input signal 1 ch
RGB output unit	GT27-ROUT GT27-ROUT-Z	For analog RGB output signal 1 ch
Digital video output unit	GT27-VHOUT	For digital video output, 1 channel
Sound output unit	GT15-SOUT	For sound output
External I/O unit	GT15-DIOR	For the connection to external I/O device or operation panel (Negative Common Input/Source Type Output)
	GT15-DIO	For the connection to external I/O device or operation panel (Positive Common Input/Sink Type Output)

Conversion cable

Product name	Model	Specifications
RS-485 terminal block conversion modules	FA-LTBGT2R4CBL05	RS-422/485 (Connector) ↔ RS-485 (Terminal block) Supplied connection cable dedicated for the conversion unit
	FA-LTBGT2R4CBL10	
	FA-LTBGT2R4CBL20	

Serial multi-drop connection unit

Product name	Model	Specifications
Serial multi-drop connection unit	GT01-RS4-M	GOT multi-drop connection module GOT2000 Series Connection Manual (Mitsubishi Electric Products) For GT Works3 Version1

Field network adapter unit

Product name	Model	Specifications
Field network adapter unit	GT25-FNADP	The field network adapter unit can be used with the following field networks by using the Anybus CompactCom M40 network communication module manufactured by HMS (hereinafter referred to as the communication module). Field networks: • PROFIBUS DP-V1 • DeviceNet How to incorporate the communication module to the field network adapter unit, and the details of the product name of the communication module, refer to the following manual. GOT2000 Series Field Network Adapter Unit User's Manual

RS-232/485 signal conversion adapter

Product name	Model	Specifications
RS-232/485 signal conversion adapter	GT14-RS2T4-9P	RS-232 signal (D-Sub 9-pin connector) → RS-485 signal (Terminal block)

Precautions when installing units on top of one another

When units are mounted on another unit, the mounting position is restricted depending on the combination of the units.

Point

• Mounting method of a communication unit and option unit

For the mounting method of a communication unit and option unit, refer to the following.

GOT2000 Series User's Manual (Hardware)

• When the multi-channel function is used

When the multi-channel function is used, the combination of connection types is restricted.

For the combination of connection types, refer to the following.

GOT2000 Series Connection Manual (Mitsubishi Electric Products) For GT Works3 Version1

Product name		Model	Number of occupied slots	Mounting position
Group A *1	Video input unit	GT27-V4-Z *2	2	1st stage
	RGB input unit	GT27-R2		
		GT27-R2-Z *2		
	Video/RGB input unit	GT27-V4R1-Z *2		
	RGB output unit	GT27-ROUT		
		GT27-ROUT-Z *2		
	Multimedia unit	GT27-MMR-Z *2		
	Digital video output unit	GT27-VHOUT		
Group B *1	Bus connection unit (2 channels) *3	GT15-QBUS2	2	• When a unit in group A is mounted: Upper stage of the group A unit • When no unit in group A is mounted: 1st stage • When any units in group C are mounted: Lower stage of the group C units
		GT15-ABUS2		
	MELSECNET/H communication unit	GT15-J71LP23-25		
		GT15-J71BR13		
	CC-Link IE TSN communication unit	GT25-J71GN13-T2		
	CC-Link IE Controller Network communication unit	GT15-J71GP23-SX		
	CC-Link IE Field Network communication unit	GT15-J71GF13-T2		
	CC-Link communication unit	GT15-J61BT13		
Group C	Bus connection unit (1 channel) *3*4	GT15-QBUS	1	• When a unit in group A is mounted: Upper stage of the group A unit • When a unit in group B is mounted: Upper stage of the group B unit
		GT15-ABUS		
	Ethernet communication unit	GT25-J71E71-100		
	Serial communication unit	GT15-RS2-9P		
		GT15-RS4-9S		
		GT15-RS4-TE		
	Sound output unit	GT15-SOUT		
	External I/O unit	GT15-DIOR		
		GT15-DIO		
	Printer unit	GT15-PRN		
Field network adapter unit		GT25-FNADP	1	Uppermost stage

*1 Only one of the units can be mounted on the GOT.

*2 Mounting the unit requires two stages.

*3 A slim model bus connection unit (GT15-75QBUSL, GT15-75QBUS2L, GT15-75ABUSL, or GT15-75ABUS2L) cannot be mounted on another unit.

*4 The unit cannot be mounted on a unit in group B.

Example) When mounting a video/RGB input unit, MELSECNET/H communication unit, and serial communication unit

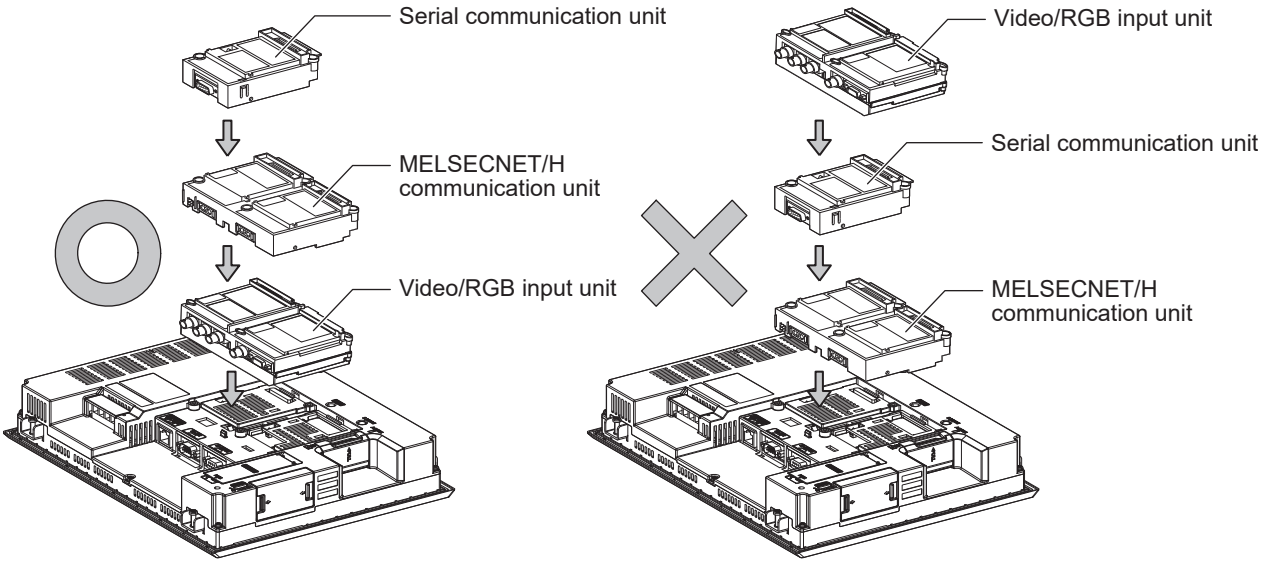

1.4 Connection Cables for the Respective Connection

To connect the GOT to a device in the respective connection type, connection cables between the GOT and a device are necessary.

For cables needed for each connection, refer to each chapter for connection.

For the dimensions of connection cables and connector shapes, refer to the following.

GOT2000 Series User's Manual (Hardware)

GOT connector specifications

The following shows the connector specifications on the GOT side.

Refer to the following table when preparing connection cables by the user.

RS-232 interface

The following connector or equivalent connector is used for the RS-232 interface of the GOT and the RS-232 communication unit.

For the GOT side of the connection cable, use a connector and connector cover applicable to the GOT connector.

■Connector specifications

GOT	Connector type	Connector model	Manufacturer
GT27, GT25, GT23, GT2107-W, GT2105-QTBDS, GT2105-QMBDS, GS21	9-pin D-sub (male) #4-40UNC inch screw thread	17LE-23090-27(D3CH)-FA	DDK Ltd.
GT15-RS2-9P	9-pin D-sub (male) #4-40UNC inch screw thread	17LE-23090-27(D3CH)-FA	DDK Ltd.
GT01-RS4-M		JES-9P-2A3A	J.S.T.MFG.CO.,LTD. (JST)
GT2104-RTBD GT2104-PMBDS2 GT2103-PMBDS2	9-pin terminal block *1*2	MC1.5/9-G-3.5BK	PHOENIX CONTACT Inc

*1 The terminal block (MC1.5/9-ST-3.5 or corresponding product) of the cable side is packed together with the GT2104-RTBD, GT2103-PMBDS2.

*2 The applicable solderless terminal of the terminal block is AI 0.25-6BU (AWG24) (PHOENIX CONTACT Inc.). When fabricating a connection cable, use CRIMPFOX 6 (PHOENIX CONTACT Inc.) for crimping tool.

■Connector pin arrangement

GT27, GT25, GT23, GT2107-W, GT2105-QTBDS, GT2105-QMBDS, GS21, GT15-RS2-9P, GT01-RS4-M	GT2104-RTBD, GT2104-PMBDS2, GT2103-PMBDS2
GOT main part connector see from the front 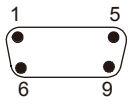 9-pin D-sub (male)	See from the back of a GOT main part 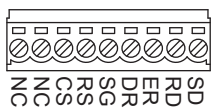 9-pin terminal block

RS-422/485 interface

The following connector or equivalent connector is used for the RS-422/485 interface of the GOT and the RS-422/485 communication unit.

For the GOT side of the connection cable, use a connector and connector cover applicable to the GOT connector.

■Connector model

GOT	Connector type	Connector model	Manufacturer
GT27, GT25, GT23, GT2107-W, GT2105-QTBDS, GT2105-QMBDS, GS21	9-pin D-Sub (female) M2.6 metric screw thread	17LE-13090-27(D3AH)-FA	DDK Ltd.
GT2104-PMBD GT2103-PMBD	5-pin terminal block *1*3	MC1.5/5-G-3.5BK	PHOENIX CONTACT Inc
GT2104-RTBD GT2104-PMBDS GT2104-PMBLS GT2103-PMBDS GT2103-PMBLS	9-pin terminal block *2*3	MC1.5/9-G-3.5BK	PHOENIX CONTACT Inc
GT15-RS4-9S	9-pin D-Sub (female) M2.6 metric screw thread	17LE-13090-27(D3AH)-FA	DDK Ltd.
GT01-RS4-M		JES-9S-2A3B14	J.S.T.MFG.CO.,LTD. (JST)
GT15-RS4-TE	—	SL-SMT3.5/10/90F BOX	Weidmüller Interface GmbH & Co. KG

*1 The terminal block (MC1.5/5-ST-3.5 or corresponding product) of the cable side is packed together with the GT2103-PMBD.

*2 The terminal block (MC1.5/9-ST-3.5 or corresponding product) of the cable side is packed together with the GT2104-RTBD, GT2103-PMBDS, GT2103-PMBLS.

*3 The applicable solderless terminal of the terminal block is AI 0.25-6BU (AWG24) (PHOENIX CONTACT Inc.). When fabricating a connection cable, use CRIMPFOX 6 (PHOENIX CONTACT Inc.) for crimping tool.

■Connector pin arrangement

GT27, GT25, GT23, GT2107-W, GT2105-QTBDS, GT2105-QMBDS, GS21, GT15-RS4-9P, GT01-RS4-M	GT2104-PMBD, GT2103-PMBD	GT2104-RTBD, GT2104-PMBDS, GT2104-PMBLS, GT2103-PMBDS, GT2103-PMBLS
GOT main part connector see from the front 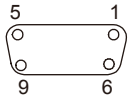 9-pin D-sub (female)	See from the back of a GOT main part 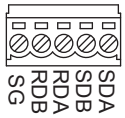 5-pin terminal block	See from the back of a GOT main part 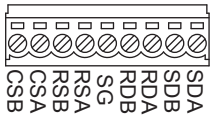 9-pin terminal block

Coaxial cableconnector connection method

The following describes the method for connecting the BNC connector (connector plug for coaxial cable) and the cable.

⚠CAUTION

● Solder the coaxial cable connectors properly.
Insufficient soldering may result in malfunctions.

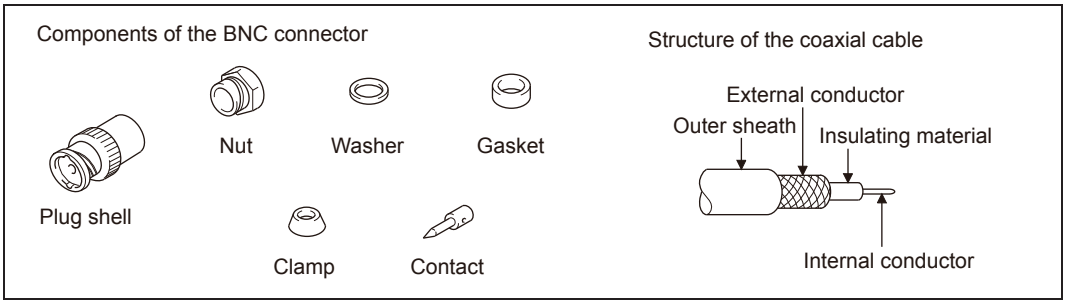

1. Remove the external sheath of the coaxial cable with dimensions as shown below.

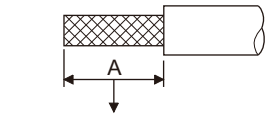

Cut this portion of the outer sheath

Cable in use	A
3C-2V	15mm
5C-2V, 5C-2V-CCY	10mm

2. Pass the nut, washer, gasket, and clamp through the coaxial cable as shown on the left and loosen the external conductor.

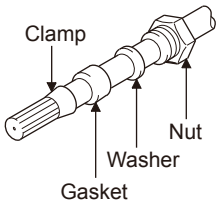

3. Cut the external conductor, insulting material, and internal conductor with the dimensions as shown below.
Note that the external conductor should be cut to the same dimension as the tapered section of the clamp and smoothed down to the clamp.

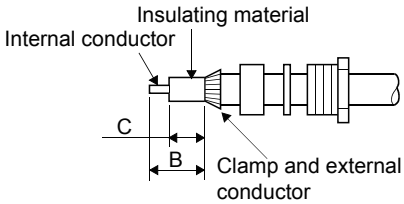

Cable in use	B	C
3C-2V	6mm	3mm
5C-2V, 5C-2V-CCY	7mm	5mm

4. Solder the contact to the internal conductor.

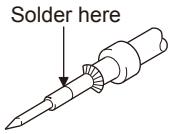

5. Insert the contact assembly shown in step 4 into the plug shell and screw the nut into the plug shell.

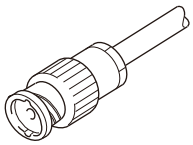

Precautions for soldering

Note the following precautions when soldering the internal conductor and contact.

- Make sure that the solder does not bead up at the soldered section.
- Make sure there are no gaps between the connector and cable insulator or they do not cut into each other.
- Perform soldering quickly so the insulation material does not become deformed.

Terminating resistors of GOT

The following shows the terminating resistor specifications on the GOT side.

When setting the terminating resistor in each connection type, refer to the following.

RS-422/485 communication unit

Set the terminating resistor using the terminating resistor setting switch.

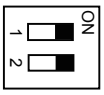

SW1

Terminating resistor*1	Switch No.	
	1	2
100 OHM	ON	ON
Disable	OFF	OFF

*1 The default setting is "Disable".

- For RS422/485 communication unit

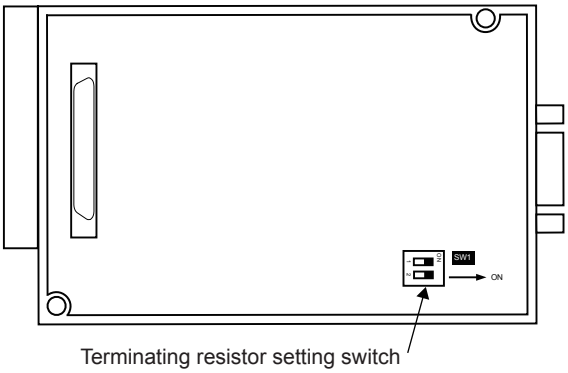

Terminating resistor setting switch

Rear view of RS-422/485 communication unit.

GT27

Set the terminating resistor using the terminating resistor setting switch.

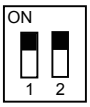

Terminating resistor*1	Switch No.	
	1	2
Enable	ON	ON
Disable	OFF	OFF

*1 The default setting is "Disable".

- For GT2710-V

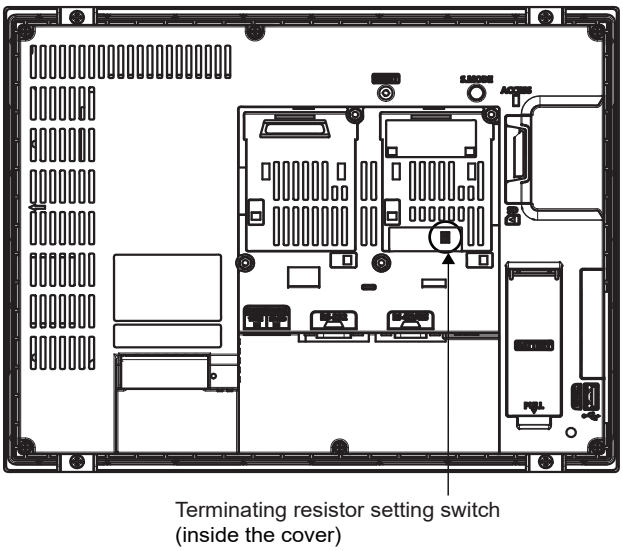

Terminating resistor setting switch
(inside the cover)

GT25 (except GT25-W and GT2505-V)

Set the terminating resistor using the terminating resistor setting switch.

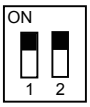

Terminating resistor*1	Switch No.	
	1	2
Enable	ON	ON
Disable	OFF	OFF

*1 The default setting is "Disable".

• For GT2510-V

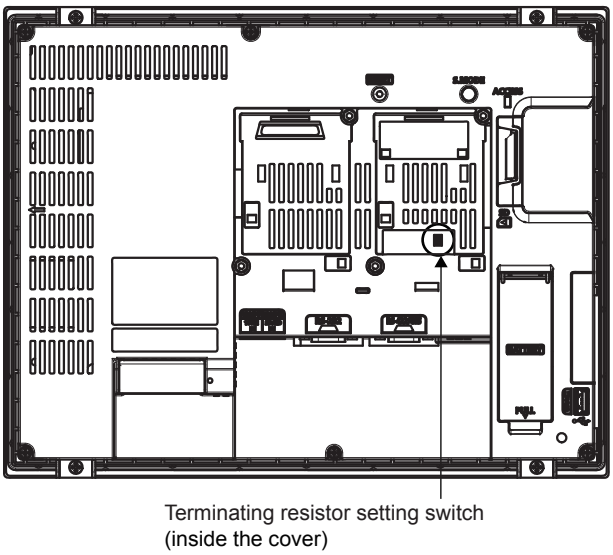

GT25-W

Set the terminating resistor using the terminating resistor selector.

• For GT2510-WX

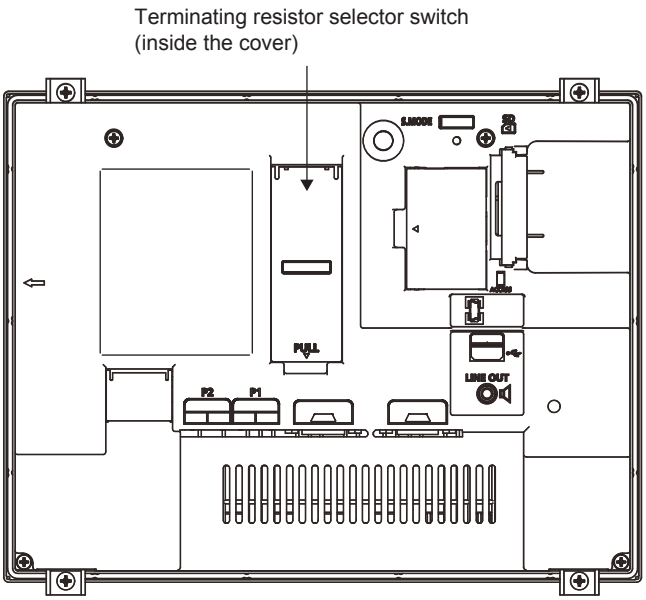

GT2505-V

Set the terminating resistor using the terminating resistor selector.

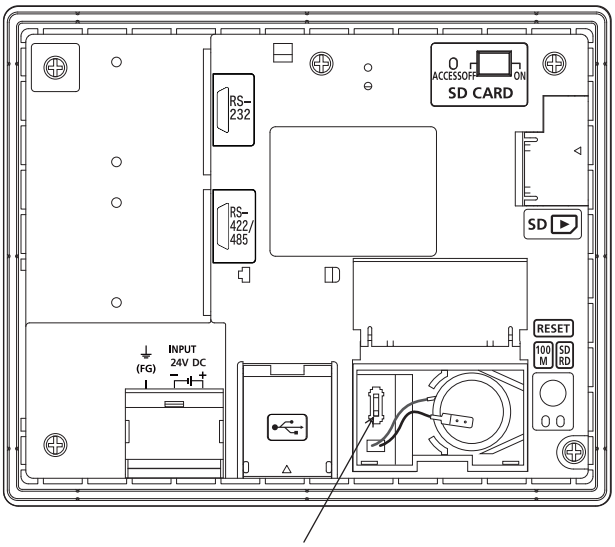

Terminating resistor selector switch

GT23

Set the terminating resistor using the terminating resistor setting switch.

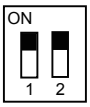

Terminating resistor*1	Switch No.	
	1	2
Enable	ON	ON
Disable	OFF	OFF

*1 The default setting is "Disable".

- For GT2310-V

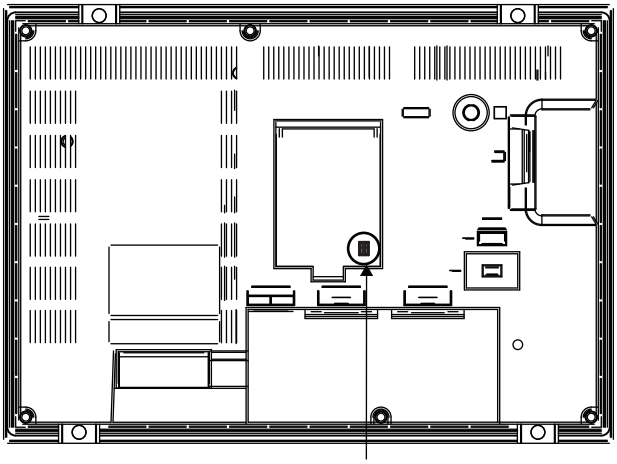

Terminating resistor setting switch
(inside the cover)

GT21

Set the terminating resistor using the terminating resistor setting switch.

• For GT2103-PMBD

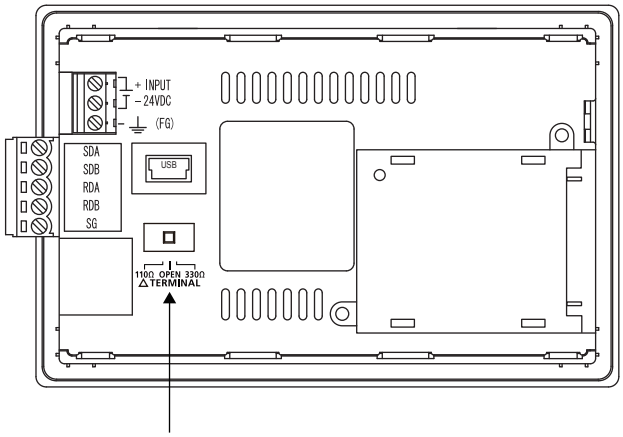

Terminating resistor selector switch

GS21-W-N

Set the terminating resistor using the terminating resistor selector.

• For GS2110-WTBD-N

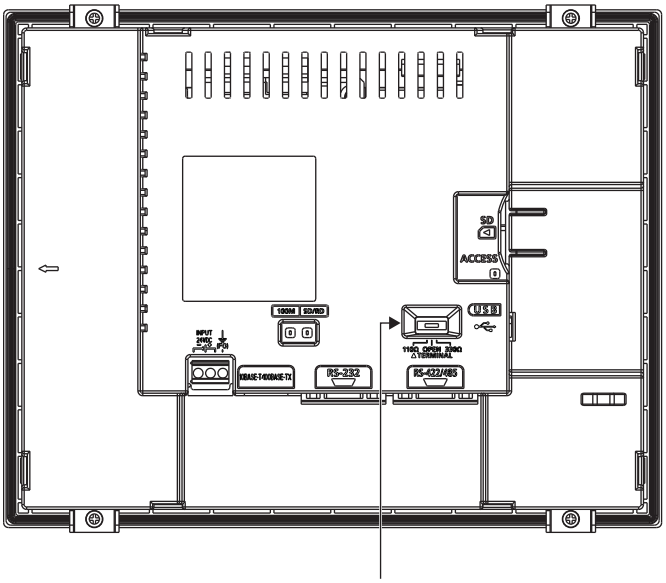

Terminating resistor selector switch

Point

Terminating resistor selector switch position

The position of the terminating resistor selector switch depends on the GOT type.

For the details, refer to the following.

GOT2000 Series User's Manual (Hardware)

Terminating resistor of GS21-W

The terminating resistor of GS21-W is fixed to 330 Ω.

For the details, refer to the following.

GOT SIMPLE Series User's Manual

Setting the RS-232/485 signal conversion adaptor

Set the 2-wire/4-wire terminating resistor setting switch according to the connection type.

Point

Enable the 5V power supply

Make sure to validate "Enable the 5V power supply" in the [RS232 Setting] to operate the RS-232/485 signal conversion adaptor.

☞ Page 48 I/F communication setting

When validating the function using the utility function of the GOT main unit, refer to the following manual.

GOT2000 Series User's Manual (Utility)

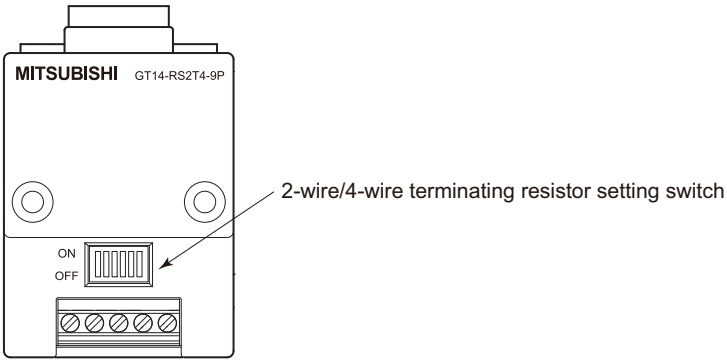

Setting the 2-wire/4-wire terminating resistor setting switch

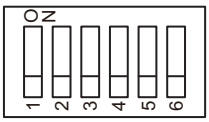

Setting item	Set value	Switch No.					
		1	2	3	4	5	6
2-wire/4-wire	2-wire (1Pair)	ON	ON	-	-	-	OFF
	4-wire (2Pair)	OFF	OFF	-	-	-	OFF
Terminating resistor	110Ω	-	-	ON	OFF	OFF	OFF
	OPEN	-	-	OFF	OFF	OFF	OFF
	330Ω	-	-	OFF	ON	ON	OFF

Point

RS-232/485 signal conversion adapter

For details on the RS-232/485 signal conversion adapter, refer to the following manual.

GT14-RS2T4-9P RS-232/485 Signal Conversion Adapter User's Manual

1.5 Verifying GOT Recognizes Connected Equipment

Verify the GOT recognizes controllers on [Communication Settings] of the Utility.

- Channel number of communication interface, communication drivers allocation status
- Communication unit installation status

For details on the Utility, refer to the following manual.

GOT2000 Series User's Manual (Utility)

1. After powering up the GOT, touch [GOT basic set] → [Controller] from the Utility.

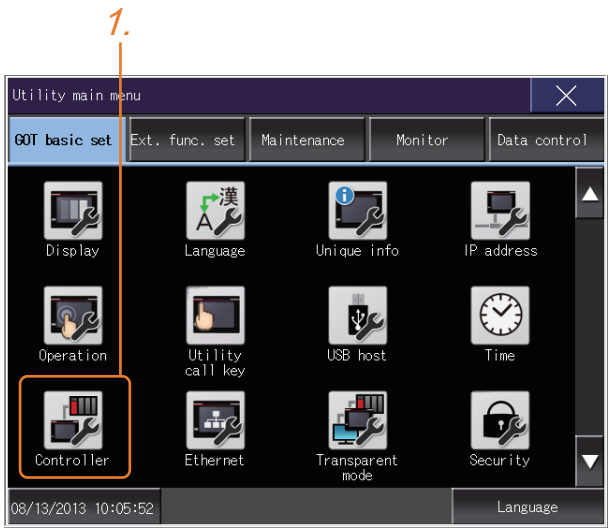

2. The [Communication Settings] appears.

3. Verify that the communication driver name to be used is displayed in the communication interface box to be used.

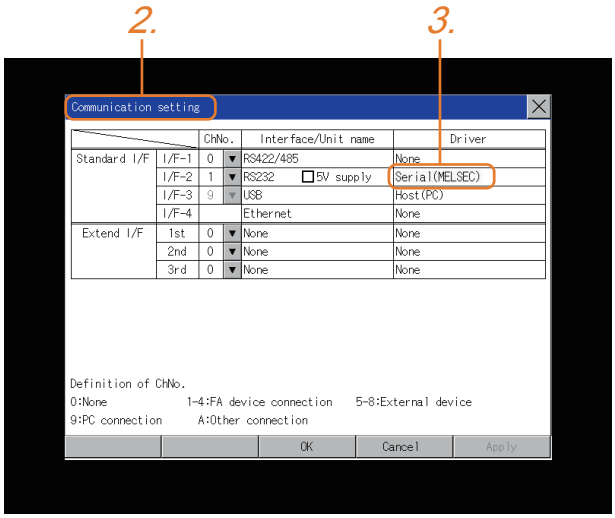

4. When the communication driver name is not displayed normally, carry out the following procedure again.

☞ Page 31 Setting the Communication Interface

Point

Utility

• How to display Utility (at default)

Utility call key
1-point press on GOT screen
upper-left corner

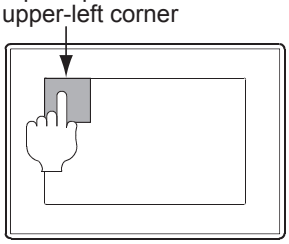

Utility display

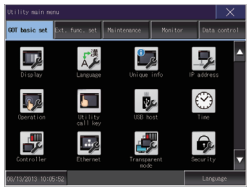

• Utility call

When setting [Pressing time] to other than 0 second on the setting screen of the utility call key, press and hold the utility call key until the buzzer sounds. For the setting of the utility call key, refer to the following.

GOT2000 Series User's Manual (Utility)

• Communication interface setting by the Utility

The communication interface setting can be changed on the Utility's [Communication setting] after writing [Communication Settings] of project data.

For details on the Utility, refer to the following manual.

GOT2000 Series User's Manual (Utility)

• Precedence in communication settings

When settings are made by GT Designer3 or the Utility, the latest setting is effective.

1.6 Checking for Normal Monitoring

Check on the GOT

Check for errors occurring on the GOT

Presetting the system alarm to project data allows you to identify errors occurred on the GOT, PLC CPU, servo amplifier and communications.

For details on the operation method of the GOT Utility screen, refer to the following manual.

GOT2000 Series User's Manual (Utility)

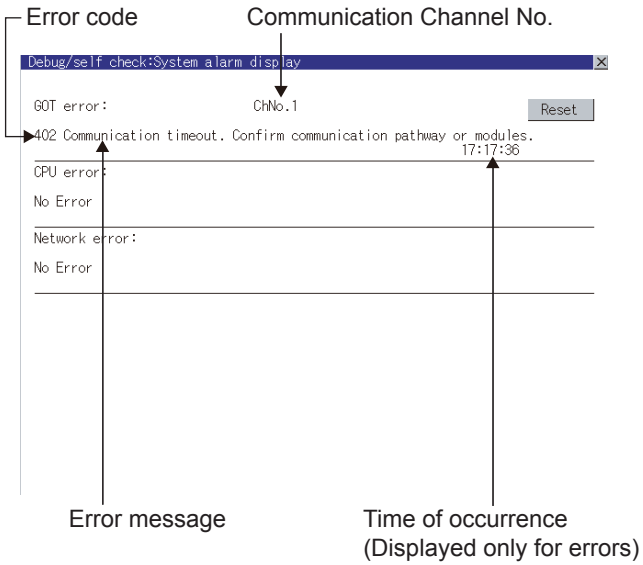

Point

Advanced alarm popup display

With the advanced alarm popup display function, alarms are displayed as a popup display regardless of whether an alarm display object is placed on the screen or not (regardless of the display screen).

Since comments can be flown from right to left, even a long comment can be displayed all.

For details of the advanced popup display, refer to the following manual.

GT Designer3 (GOT2000) Screen Design Manual

Perform an I/O check

Whether the PLC can communicate with the GOT or not can be checked by the I/O check function.

If this check ends successfully, it means correct communication interface settings and proper cable connection.

Display the I/O check screen by Main Menu.

• For GT16

Display the I/O check screen by [Main menu] → [Self check] → [I/O check].

• For GT15, GT14, GT11

Display the I/O check screen by [Main menu] → [Debug & self check] → [Self check] → [I/O check].

For details on the I/O check, refer to the following manual.

GOT2000 Series User's Manual (Utility)

1. Touch [CPU] on the I/O check screen.

Touching [CPU] executes the communication check with the connected PLC.

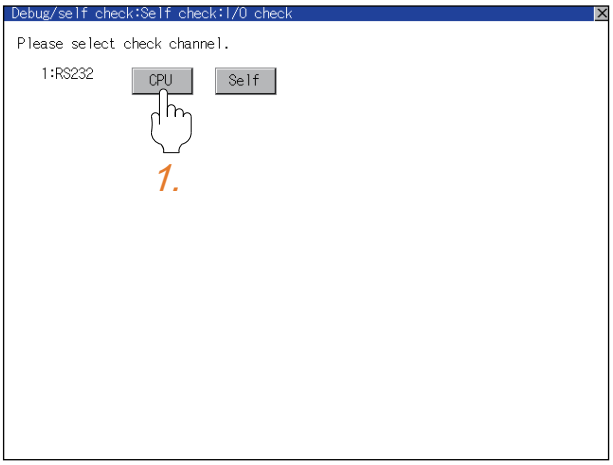

2. When the communication screen ends successfully, the screen on the left is displayed.

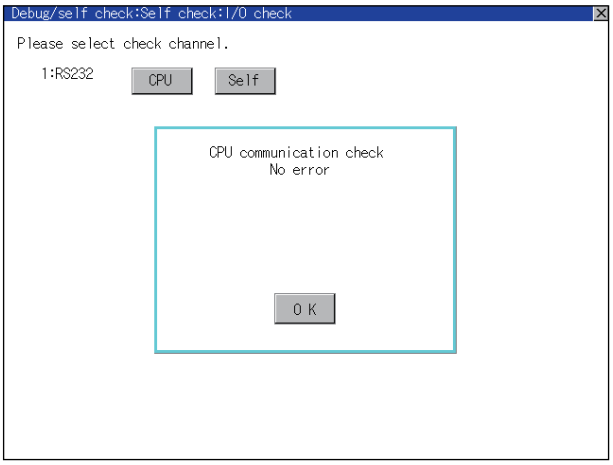

Communication monitoring function

The communication monitoring is a function that checks whether the PLC can communicate with the GOT.
If this check ends successfully, it means correct communication interface settings and proper cable connection.
Display the communication monitoring function screen by [Main Menu] → [Comm. Setting] → [Comm. Monitor].
For details on the communication monitoring function, refer to the following manual:
GOT2000 Series User's Manual (Utility)
(Operation of communication monitoring function screen)

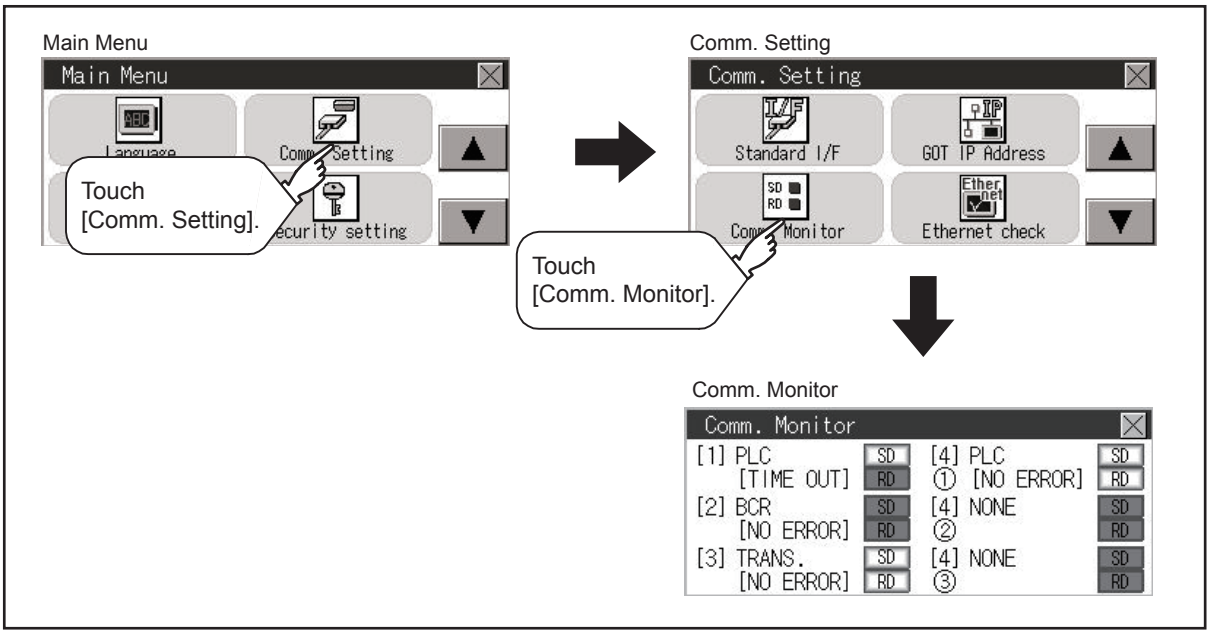

Confirming the communication state on the GOT side (For Ethernet connection)

Confirming the communication state on Windows, GT Designer3

■When using the Windows Command Prompt

Execute a Ping command at the Command Prompt of Windows.

• At normal communication

C:\>Ping 192.168.3.18

Reply from 192.168.3.18: bytes=32 time<1ms TTL=64

• At abnormal communication

C:\>Ping 192.168.3.18

Request timed out.

■When using the [Connection Test] of GT Designer3

Select [Communication] → [Communication settings] from the menu to display [TEST].

1. Set the [PC side I/F] to the [Ethernet].

2. Specify the [GOT IP Address] of the [Communication Configuration] and click the [Test] button.

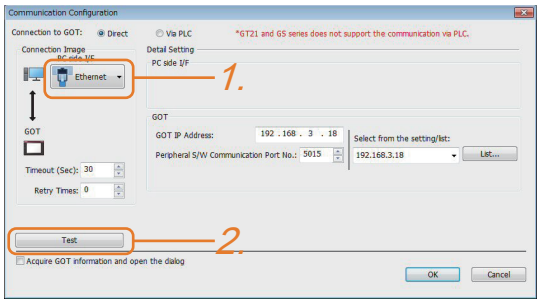

3. Check if GT Designer3 has been connected to the GOT.

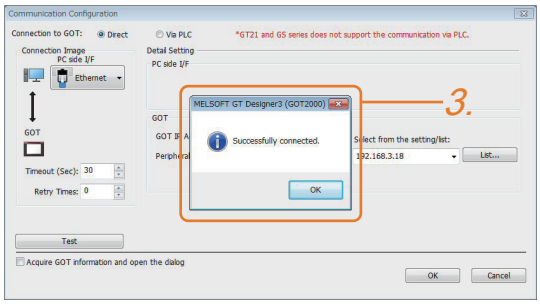

■At abnormal communication

At abnormal communication, check the followings and execute the Ping command or [Connection Test] again.

• Mounting condition of Ethernet communication unit

• Cable connecting condition

• Confirmation of [Communication Settings]

• IP address of GOT specified by Ping command

Confirming the communication state on the GOT

[PING Test] can be confirmed by the Utility screen of the GOT.

For details on the operation method of the GOT Utility screen, refer to the following manual.

GOT2000 Series User's Manual (Utility)

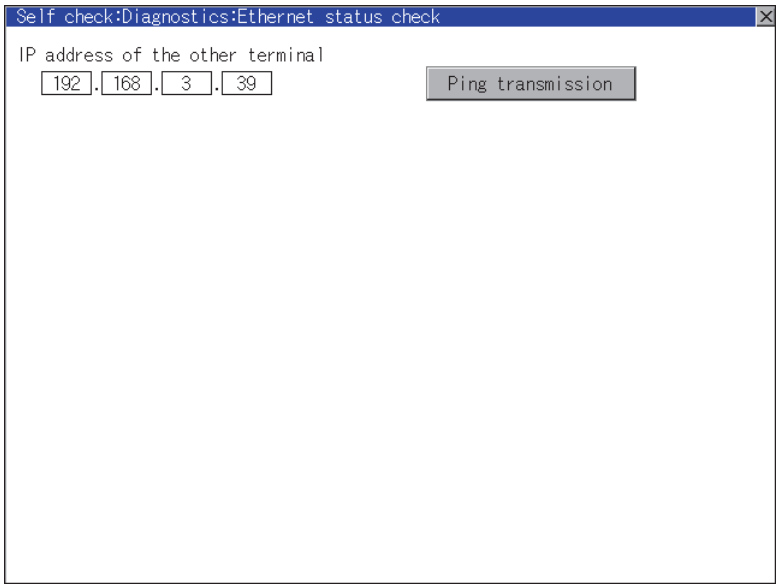

Confirming the communication state to each station (Station monitoring function)

The station monitoring function detects the faults (communication timeout) of the stations monitored by the GOT. When an abnormal state is detected, the function assigns the information of the faulty station to the GOT special register (GS).

No. of faulty stations

■For the Ethernet connection (except for the Ethernet multiple connection)

Total No. of the faulty CPU are stored.

Device	b15 to b8	b7 to b0
GS230	(00H fixed)	No. of faulty stations

■For Ethernet multiple connection

The total No. of the faulty devices is stored.

Channel	Device	b15 to b8	b7 to b0
Ch1	GS280	(00H fixed)	No. of faulty stations
Ch2	GS300	(00H fixed)	No. of faulty stations
Ch3	GS320	(00H fixed)	No. of faulty stations
Ch4	GS340	(00H fixed)	No. of faulty stations

Point

When monitoring GS230 on Numerical Display

When monitoring GS230 on Numerical Display, check [mask processing] with data operation tab as the following.

For the data operation, refer to the following manual.

GT Designer3 (GOT2000) Screen Design Manual

• Numerical Display (Data Operation tab)

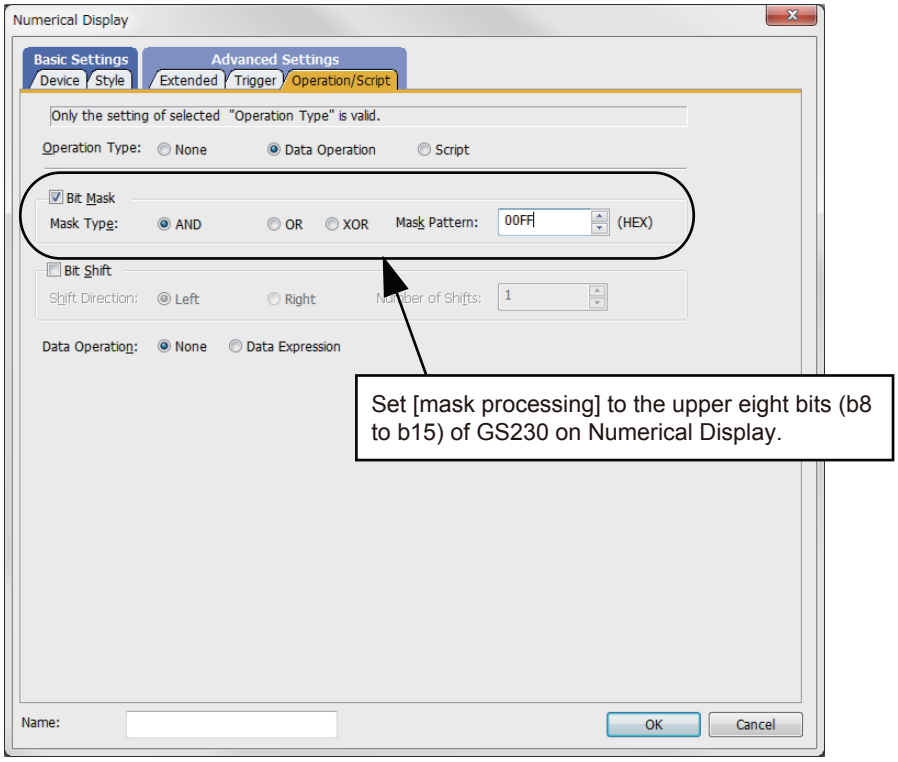

Faulty station information

The bit corresponding to the faulty station is set. (0: Normal, 1: Abnormal)

The bit is reset after the fault is recovered.

■Ethernet connection

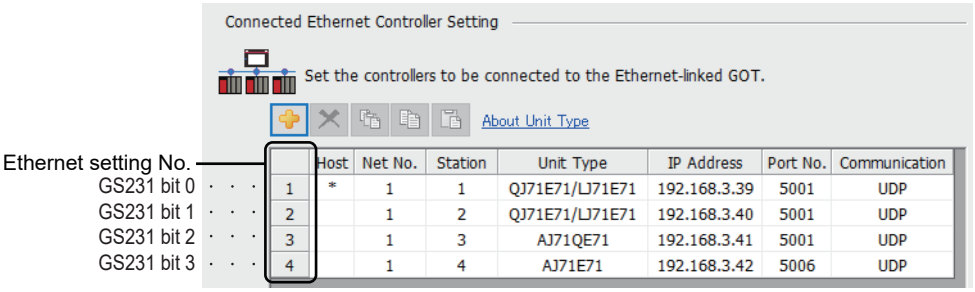

Device	Ethernet setting No.															
	b15	b14	b13	b12	b11	b10	b9	b8	b7	b6	b5	b4	b3	b2	b1	b0
GS231	16	15	14	13	12	11	10	9	8	7	6	5	4	3	2	1
GS232	32	31	30	29	28	27	26	25	24	23	22	21	20	19	18	17
GS233	48	47	46	45	44	43	42	41	40	39	38	37	36	35	34	33
GS234	64	63	62	61	60	59	58	57	56	55	54	53	52	51	50	49
GS235	80	79	78	77	76	75	74	73	72	71	70	69	68	67	66	65
GS236	96	95	94	93	92	91	90	89	88	87	86	85	84	83	82	81
GS237	112	111	110	109	108	107	106	105	104	103	102	101	100	99	98	97
GS238	128	127	126	125	124	123	122	121	120	119	118	117	116	115	114	113

The following shows the Ethernet setting numbers for each device in the Ethernet multiple connection.

Device				Ethernet setting No.															
Ch1	Ch2	Ch3	Ch4	b15	b14	b13	b12	b11	b10	b9	b8	b7	b6	b5	b4	b3	b2	b1	b0
GS281	GS301	GS321	GS341	16	15	14	13	12	11	10	9	8	7	6	5	4	3	2	1
GS282	GS302	GS322	GS342	32	31	30	29	28	27	26	25	24	23	22	21	20	19	18	17
GS283	GS303	GS323	GS343	48	47	46	45	44	43	42	41	40	39	38	37	36	35	34	33
GS284	GS304	GS324	GS344	64	63	62	61	60	59	58	57	56	55	54	53	52	51	50	49
GS285	GS305	GS325	GS345	80	79	78	77	76	75	74	73	72	71	70	69	68	67	66	65
GS286	GS306	GS326	GS346	96	95	94	93	92	91	90	89	88	87	86	85	84	83	82	81
GS287	GS307	GS327	GS347	112	111	110	109	108	107	106	105	104	103	102	101	100	99	98	97
GS288	GS308	GS328	GS348	128	127	126	125	124	123	122	121	120	119	118	117	116	115	114	113

■CC-Link IE TSN connection

Device	Station number															
	b15	b14	b13	b12	b11	b10	b9	b8	b7	b6	b5	b4	b3	b2	b1	b0
GS1281	15	14	13	12	11	10	9	8	7	6	5	4	3	2	1	0
GS1282	31	30	29	28	27	26	25	24	23	22	21	20	19	18	17	16
GS1283	47	46	45	44	43	42	41	40	39	38	37	36	35	34	33	32
GS1284	63	62	61	60	59	58	57	56	55	54	53	52	51	50	49	48
GS1285	79	78	77	76	75	74	73	72	71	70	69	68	67	66	65	64
GS1286	95	94	93	92	91	90	89	88	87	86	85	84	83	82	81	80
GS1287	111	110	109	108	107	106	105	104	103	102	101	100	99	98	97	96
GS1288	-	-	-	-	-	-	-	120	119	118	117	116	115	114	113	112

■Connection with the temperature controller (AZBIL temperature controller (DMC50))

Device				Station number-Sub Station															
Ch1	Ch2	Ch3	Ch4	b15	b14	b13	b12	b11	b10	b9	b8	b7	b6	b5	b4	b3	b2	b1	b0
GS281	GS301	GS321	GS341	1-15	1-14	1-13	1-12	1-11	1-10	1-9	1-8	1-7	1-6	1-5	1-4	1-3	1-2	1-1	1-0
GS282	GS302	GS322	GS342	2-15	2-14	2-13	2-12	2-11	2-10	2-9	2-8	2-7	2-6	2-5	2-4	2-3	2-2	2-1	2-0
GS283	GS303	GS323	GS343	3-15	3-14	3-13	3-12	3-11	3-10	3-9	3-8	3-7	3-6	3-5	3-4	3-3	3-2	3-1	3-0
GS284	GS304	GS324	GS344	4-15	4-14	4-13	4-12	4-11	4-10	4-9	4-8	4-7	4-6	4-5	4-4	4-3	4-2	4-1	4-0
GS285	GS305	GS325	GS345	5-15	5-14	5-13	5-12	5-11	5-10	5-9	5-8	5-7	5-6	5-5	5-4	5-3	5-2	5-1	5-0
GS286	GS306	GS326	GS346	6-15	6-14	6-13	6-12	6-11	6-10	6-9	6-8	6-7	6-6	6-5	6-4	6-3	6-2	6-1	6-0
GS287	GS307	GS327	GS347	7-15	7-14	7-13	7-12	7-11	7-10	7-9	7-8	7-7	7-6	7-5	7-4	7-3	7-2	7-1	7-0
GS288	GS308	GS328	GS348	8-15	8-14	8-13	8-12	8-11	8-10	8-9	8-8	8-7	8-6	8-5	8-4	8-3	8-2	8-1	8-0

■Connection types other than the above

The supported device differs depending on the communication driver to be used.

- Communication drivers supported by the host station only

Communication driver list		
Bus Q	Bus A/QnA	Serial(MELSEC)
AJ71QC24, MELDAS C6*	AJ71C24/UC24	CC-Link(G4)
MELSEC-FX	MELSEC-WS	OMRON SYSMAC
YASKAWA GL	YASKAWA CP9200 (H)	YASKAWA CP9300MS (MC compatible)
YASKAWA MP2000/MP900/CP9200SH	AB Control/CompactLogix	SHARP JW
TOSHIBA PROSEC T/V	HITACHI IES HIDIC H	HITACHI IES HIDIC H(Protocol2)
PANASONIC MEWNET-FP	PANASONIC MEWTOCOL-7	SIEMENS S7-200
YOKOGAWA FA500/FA-M3/STARDOM	Serial(KEYENCE)	HITACHI S10mini/S10V
FUJI MICREX-SX SPH	SHIBAURA MACHINE TCmini	SICK Flexi Soft
IAI X-SEL	PROFIBUS DP	DeviceNet

The host station uses the 0th bit at the top.

Ch1: GS281.b0

Ch2: GS301.b0

Ch3: GS321.b0

Ch4: GS341.b0

• Communication drivers supported by the other stations

Communication driver list		
CC-Link IE Controller Network	CC-Link IE Field Network	MEI Nexgenie
AB SLC500 AB 1:N connection	AB MicroLogix	AB MicroLogix(Extended)
SIEMENS S7-300/400	JTEKT TOYOPUC-PC	FUJI MICREX-F
GE(SNP-X)	KOYO KOSTAC/DL	LS Industrial Systems MASTER-K
Hirata HNC	IAI robocylinder	Panasonic MINAS A4
Panasonic MINAS A5	Muratec MPC	MELSERVO-J4,J3,J2S/M,JE
FREQROL 500/700/800,SENSORLESS SERVO	FREQROL 800	FREQROL(Batch monitor)
OMRON THERMAC/INPANEL NEO	OMRON Digital Temperature Controller	AZBIL SDC/DMC
AZBIL DMC50	RKC SR Mini HG (MODBUS)	FUJI Temperature Controller/Digital Controller
YOKOGAWA GREEN/UT100/UT2000/ UTAdvanced	SHINKO TECHNOS CONTROLLER	CHINO MODBUS device
MODBUS/RTU Master		

The following shows the supported devices.

Device				Station number															
Ch1	Ch2	Ch3	Ch4	b15	b14	b13	b12	b11	b10	b9	b8	b7	b6	b5	b4	b3	b2	b1	b0
GS281	GS301	GS321	GS341	15	14	13	12	11	10	9	8	7	6	5	4	3	2	1	0*1
GS282	GS302	GS322	GS342	31	30	29	28	27	26	25	24	23	22	21	20	19	18	17	16
GS283	GS303	GS323	GS343	47	46	45	44	43	42	41	40	39	38	37	36	35	34	33	32
GS284	GS304	GS324	GS344	63	62	61	60	59	58	57	56	55	54	53	52	51	50	49	48
GS285	GS305	GS325	GS345	79	78	77	76	75	74	73	72	71	70	69	68	67	66	65	64
GS286	GS306	GS326	GS346	95	94	93	92	91	90	89	88	87	86	85	84	83	82	81	80
GS287	GS307	GS327	GS347	111	110	109	108	107	106	105	104	103	102	101	100	99	98	97	96
GS288	GS308	GS328	GS348	127 *1*2	126 *1*2	125 *1*2	124 *1*2	123 *1*2	122 *1*2	121 *1*2	120	119	118	117	116	115	114	113	112

*1 When CC-Link IE controller network connection is not used.

*2 When CC-Link IE field network connection is not used.

For details on the GS Device, refer to the following manual.

GT Designer3 (GOT2000) Screen Design Manual

Network No., station No. notification

The network No. and station No. of the GOT in Ethernet connection are stored at GOT startup.

If connected by other than Ethernet, 0 is stored.

Device				Description
CH1	CH2	CH3	CH4	
GS376	GS378	GS380	GS382	Network No. (1 to 239)
GS377	GS379	GS381	GS383	Station No. (1 to 64)

PART 2 CONNECTIONS TO NON-MITSUBISHI ELECTRIC PRODUCTS

2 HITACHI IES PLC

3 HITACHI PLC

4 FUJI PLC

5 FUJI TEMPERATURE CONTROLLER

6 YASKAWA PLC

7 YASKAWA ROBOT CONTROLLER

8 YOKOGAWA PLC

9 YOKOGAWA TEMPERATURE CONTROLLER

10 RKC TEMPERATURE CONTROLLER

11 ALLEN-BRADLEY PLC

12 GE PLC

13 LS INDUSTRIAL SYSTEMS PLC

14 MITSUBISHI ELECTRIC INDIA PLC

15 SICK SAFETY CONTROLLER

16 SIEMENS PLC

17 HIRATA CORPORATION HNC CONTROLLER

18 MURATEC CONTROLLER

2 HITACHI IES PLC

- Page 80 Connectable Model List
- Page 81 Serial Connection
- Page 90 Ethernet Connection
- Page 99 Settable Device Range

2.1 Connectable Model List

The following table shows the connectable models.

Series	Model name	Clock	Communication Type	Connectable model	Refer to
Large-sized H Series	H-302	○	RS-232 RS-422	GT27 GT25 GT23	☞ Page 81 Connection to large-sized H series
	H-702				
	H-1002				
	H-2002				
	H-4010				
	H-300	×			
	H-700				
	H-2000				
H-200 to 252 Series	H-200	○	RS-232	GT27 GT25 GT23	☞ Page 83 Connecting to H-200 to 252, H series board type, or EH-150
	H-250				
	H-252				
	H-252B				
	H-252C				
H Series board type	H-20DR	○	RS-232	GT27 GT25 GT23	☞ Page 83 Connecting to H-200 to 252, H series board type, or EH-150
	H-28DR				
	H-40DR				
	H-64DR				
	H-20DT				
	H-28DT				
	H-40DT				
	H-64DT				
	HL-40DR				
	HL-64DR				
EH-150 series	EH-CPU104	×	RS-232	GT27 GT25 GT23	☞ Page 83 Connecting to H-200 to 252, H series board type, or EH-150
	EH-CPU208	○			
	EH-CPU308				
	EH-CPU316				
	EH-CPU516				
	EH-CPU548				
EHV series	EHV-CPU08	○	Ethernet	GT27 GT25 GT23	☞ Page 90 Connecting to EHV or MICRO-EHV series
	EHV-CPU16				
	EHV-CPU32				
	EHV-CPU64				
	EHV-CPU128				
MICRO-EHV series	MVH-A40□□□	○	Ethernet	GT27 GT25 GT23	☞ Page 90 Connecting to EHV or MICRO-EHV series
	MVH-D40□□□				
	MVH-A64□□□				
	MVH-D64□□□				

2.2 Serial Connection

Connection to large-sized H series

Communication driver

· HITACHI IES HIDIC H
· HITACHI IES HIDIC H(Protocol2)

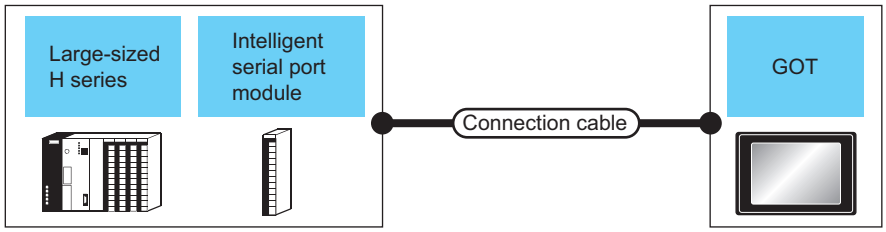

To use transmission control procedure 2 as a protocol, select [HITACHI IES HIDIC H(Protocol2)] for the communication driver.

PLC			Connection cable		GOT		Number of connectable equipment
Model name	Intelligent serial port module*1	Communication Type	Cable model Connection diagram number	Max. distance	Option device*4	Model	
H-302*2 H-702*2 H-1002*2 H-2002*2 H-300 H-700 H-2000	-	RS-232	GT09-C30R20401-15P(3m) or User preparing RS-232 connection diagram 1)	15m	- (Built into GT27 GT25 GT23)	GT27 GT25 GT23	1 GT for 1 PLC
					GT15-RS2-9P	GT27 GT25	
H-4010	-	RS-232	• Specified transmission speed: 4800bps GT09-C30R20401-15P(3m) or User preparing RS-232 connection diagram 1) • Specified transmission speed: 19200bps GT09-C30R20402-15P(3m) or User preparing RS-232 connection diagram 2) • Specified transmission speed: 38400bps*3 GT09-C30R20402-15P(3m) or User preparing RS-232 connection diagram 2) • Transmission speed other than the above GT09-C30R20401-15P(3m) or User preparing RS-232 connection diagram 1) GT09-C30R20402-15P(3m) or User preparing RS-232 connection diagram 2)	15m	- (Built into GT27 GT25 GT23)	GT27 GT25 GT23	
					GT15-RS2-9P	GT27 GT25	
H-302 H-702 H-1002 H-2002 H-4010 H-300 H-700 H-2000	COMM-H COMM-2H	RS-232	GT09-C30R20401-15P(3m) or User preparing RS-232 connection diagram 1)	15m	- (Built into GT27 GT25 GT23)	GT27 GT25 GT23	1 GT for 1 intelligent serial port module
					GT15-RS2-9P	GT27 GT25	
		RS-422	GT09-C30R40401-7T(3m) GT09-C100R40401-7T(10m) GT09-C200R40401-7T(20m) GT09-C300R40401-7T(30m) or User preparing RS-422 connection diagram 1)	200m	- (Built into GT27 GT25 GT23)	GT27 GT25 GT23	
					GT15-RS4-9S	GT27 GT25	

*1 Product manufactured by HITACHI Industrial Equipment Systems Co., Ltd. For details of this product, contact HITACHI Industrial Equipment Systems Co., Ltd.
*2 Connect to the peripheral port of the CPU module.
*3 Can be specified with the CPU software of revision "J" or later.
*4 GT25-W, GT2505-V does not support the option device.

Connecting to H-200 to 252, H series board type, or EH-150

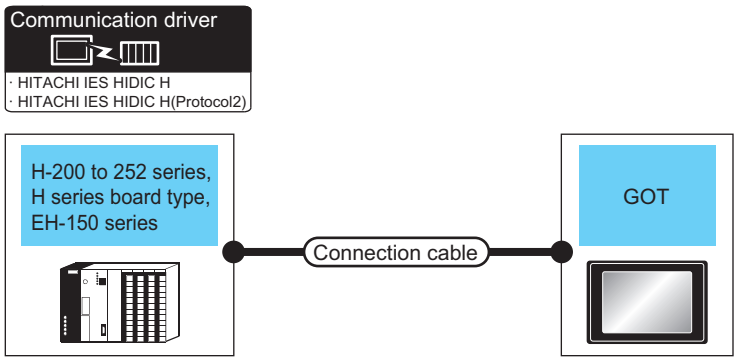

To use transmission control procedure 2 as a protocol, select [HITACHI IES HIDIC H(Protocol2)] for the communication driver.

PLC		Connection cable		GOT		Number of connectable equipment
Model name	Communication Type	Cable model Connection diagram number	Max. distance	Option device*4	Model	
H-200*1, H-250*1 H-252*1, H-252B*1 H-20DR, H-28DR H-40DR, H-64DR H-20DT, H-28DT H-40DT, H-64DT HL-40DR, HL-64DR	RS-232	GT09-C30R20401-15P(3m) or User preparing RS-232 connection diagram 1)	15m	- (Built into GOT)	GT27 GT25 GT23	1 GOT for 1 PLC
				GT15-RS2-9P	GT27 GT25	
H-252C*1*2	RS-232	• Specified transmission speed: 4800bps GT09-C30R20401-15P(3m) or User preparing RS-232 connection diagram 1) • Specified transmission speed: 19200bps GT09-C30R20402-15P(3m) or User preparing RS-232 connection diagram 2) • Transmission speed other than the above GT09-C30R20401-15P(3m) or User preparing RS-232 connection diagram 1) GT09-C30R20402-15P(3m) or User preparing RS-232 connection diagram 2)	15m	- (Built into GOT)	GT27 GT25 GT23	
				GT15-RS2-9P	GT27 GT25	
EH-CPU104*3 EH-CPU208*3 EH-CPU308*3 EH-CPU316*3 EH-CPU516*3 EH-CPU548*3	RS-232	• Specified transmission speed: 4800bps GT09-C30R20401-15P(3m) or User preparing RS-232 connection diagram 1) • Specified transmission speed: 19200bps GT09-C30R20402-15P(3m) or User preparing RS-232 connection diagram 2) • Specified transmission speed: 38400bps GT09-C30R20402-15P(3m) or User preparing RS-232 connection diagram 2) • Transmission speed other than the above GT09-C30R20401-15P(3m) or User preparing RS-232 connection diagram 1) GT09-C30R20402-15P(3m) or User preparing RS-232 connection diagram 2)	15m	- (Built into GOT)	GT27 GT25 GT23	
				GT15-RS2-9P	GT27 GT25	

*1 To connect to H-200 to 252 series, connect to the peripheral port of the CPU module.

*2 To connect to serial port 2 of H-252C (CPU22-02HC, CPE22-02HC), the round connector (8 pins)/D-sub connector (15 pins) conversion cable (CNCOM-05 made by HITACHI Industrial Equipment Systems Co., Ltd.) is necessary.

*3 To connect to the EH-150 series, connect to the serial port of the CPU module.
The module jack (8 pins)/D-sub connector (15 pins) conversion cable (EHRS05 made by HITACHI Industrial Equipment Systems Co., Ltd.) is necessary.

*4 GT25-W, GT2505-V does not support the option device.

Connection diagram

The following diagram shows the connection between the GOT and the PLC.

RS-232 cable

■Connection diagram

• RS-232 connection diagram 1)

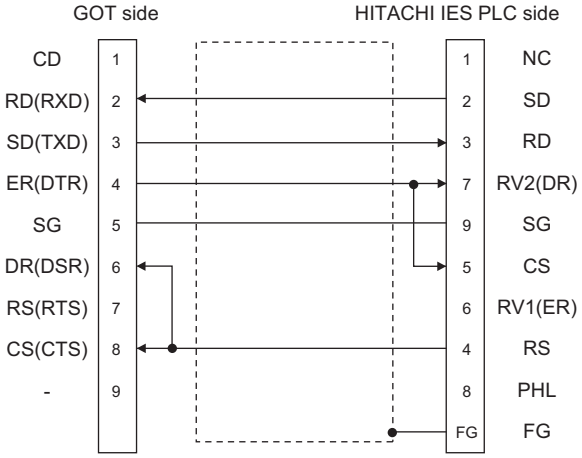

• RS-232 connection diagram 2)

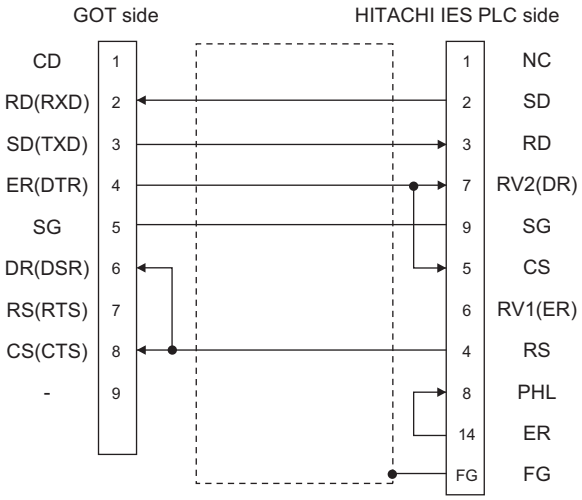

■Precautions when preparing a cable

• Cable length

The length of the RS-232 cable must be 15m or less.

• GOT side connector

For the GOT side connector, refer to the following.

☞ Page 58 GOT connector specifications

• HITACHI IES PLC side connector

Use the connector compatible with the HITACHI IES PLC side module.

For details, refer to the HITACHI IES PLC user's manual.

RS-422 cable

■Connection diagram

• RS-422 connection diagram 1)

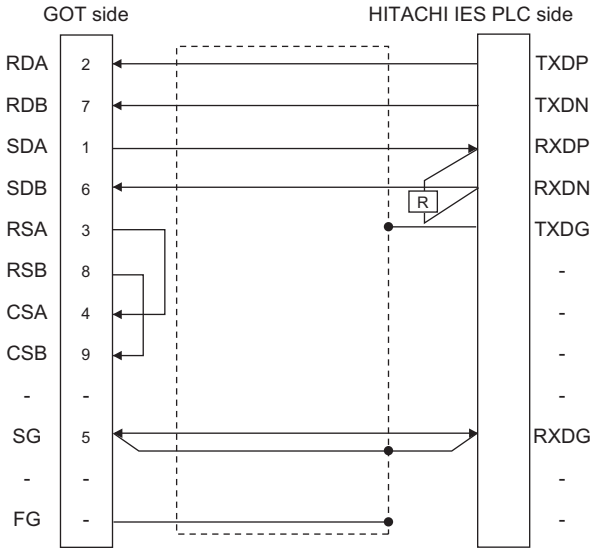

■Precautions when preparing a cable

• Cable length

The length of the RS-422 cable must be 200m or less.

• GOT side connector

For the GOT side connector, refer to the following.

☞ Page 58 GOT connector specifications

• HITACHI IES PLC side connector

Use the connector compatible with the HITACHI IES PLC side module.

For details, refer to the HITACHI IES PLC user's manual.

■Connecting terminating resistors

• GOT side

◇For GT27,GT25(Except GT2505-V), GT23

Set the terminating resistor setting switch of the GOT main unit to "Disable".

◇For GT2505-V, GT21

Set the terminating resistor selector to "330Ω".

For the procedure to set the terminating resistor, refer to the following.

☞ Page 62 Terminating resistors of GOT

• HITACHI IES PLC side

When connecting an intelligent serial port module to a GOT, a terminating resistor has to be connected to the intelligent serial port module.

📖HITACHI IES PLC user's Manual

GOT side settings

Setting communication interface (Communication settings)

Set the channel of the connected equipment.

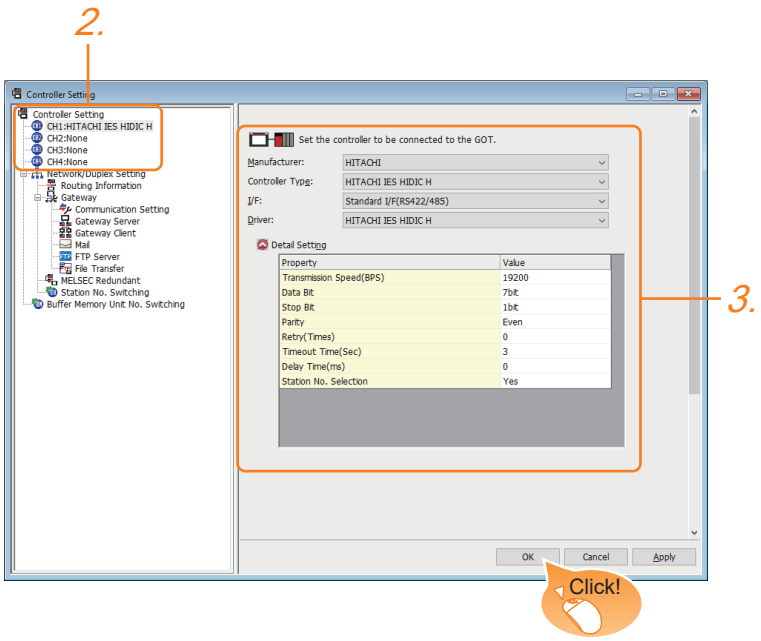

1. Select [Common] → [Controller Setting] from the menu.

2. In the [Controller Setting] window, select the channel No. to be used from the list menu.

3. Set the following items.

- [Manufacturer]: [HITACHI]
- [Controller Type]: [HITACHI IES HIDIC H]
- [I/F]: Interface to be used
- [Driver]: Select one of the following items according to the controller to be connected.

[HITACHI IES HIDIC H]

[HITACHI IES HIDIC H(Protocol2)]

- [Detail Setting]: Configure the settings according to the usage environment.

☞ Page 87 Communication detail settings

4. When you have completed the settings, click the [OK] button.

Point

The settings of connecting equipment can be confirmed in [I/F Communication Setting].

For details, refer to the following.

☞ Page 48 I/F communication setting

Communication detail settings

Make the settings according to the usage environment.

■HITACHI IES HIDIC H

Property	Value
Transmission Speed(BPS)	19200
Data Bit	7 bit
Stop Bit	1 bit
Parity	Even
Retry(Times)	0
Timeout Time(Sec)	3
Delay Time(ms)	0
Station No. Selection	Yes

Item	Description	Range
Transmission Speed	Set this item when change the transmission speed used for communication with the connected equipment. (Default: 19200bps)	4800bps, 9600bps, 19200bps, 38400bps
Data Bit	Set this item when change the data length used for communication with the connected equipment. (Default: 7bit)	7bit (fixed)
Stop Bit	Specify the stop bit length for communications. (Default: 1bit)	1bit (fixed)
Parity	Specify whether or not to perform a parity check, and how it is performed during communication. (Default: Even)	Even (fixed)
Retry	Set the number of retries to be performed when a communication error occurs. (Default: 0time)	0 to 5times
Timeout Time	Set the time period for a communication to time out. (Default: 3sec)	1 to 30sec
Delay Time	Set this item to adjust the transmission timing of the communication request from the GOT. (Default: 0ms)	0 to 300 (ms)
Station No. Selection*1	Specify whether to use the station No. during communication. If [Yes] is selected, the station No. is fixed to "0." (Default: Yes)	Yes or No

*1 By PLC port that is connected to the GOT, different [Station No. Selection] of the set as follows.
When a PLC port is RS422 port: [Yes]
When a PLC port is S232C port: [No]

■HITACHI IES HIDIC H(Protocol2)

Property	Value
Transmission Speed(BPS)	19200
Data Bit	7 bit
Stop Bit	1 bit
Parity	Even
Retry(Times)	0
Timeout Time(Sec)	3
Delay Time(ms)	0
Station No. Selection	Yes

Item	Description	Range
Transmission Speed	Set this item when change the transmission speed used for communication with the connected equipment. (Default: 19200bps)	4800bps, 9600bps, 19200bps, 38400bps
Data Bit	Set this item when change the data length used for communication with the connected equipment. (Default: 7bit)	7bit (fixed)
Stop Bit	Specify the stop bit length for communications. (Default: 1bit)	1bit (fixed)
Parity	Specify whether or not to perform a parity check, and how it is performed during communication. (Default: Even)	Even (fixed)
Retry	Set the number of retries to be performed when a communication error occurs. (Default: 0time)	0 to 5times
Timeout Time	Set the time period for a communication to time out. (Default: 3sec)	1 to 30sec
Delay Time	Set this item to adjust the transmission timing of the communication request from the GOT. (Default: 0ms)	0 to 300 (ms)
Station No. Selection*1	Specify whether to use the station No. during communication. If [Yes] is selected, the station No. is fixed to "0." (Default: Yes)	Yes or No

*1 By PLC port that is connected to the GOT, different [Station No. Selection] of the set as follows.
When a PLC port is RS422 port: [Yes]
When a PLC port is S232C port: [No]

Point

• Communication interface setting by the Utility

The communication interface setting can be changed on the Utility's [Communication Settings] after writing [Communication Settings] of project data.

For details on the Utility, refer to the following manual.

GOT2000 Series User's Manual (Utility)

• Precedence in communication settings

When settings are made by GT Designer3 or the Utility, the latest setting is effective.

PLC side setting

Point

HITACHI IES PLC

For details of the HITACHI IES PLC, refer to the following manual.

HITACHI IES PLC user's Manual

Direct CPU connection (serial)

Item	Set value
Transmission speed*1*2*3	4800bps, 9600bps, 19200bps, 38400bps
Station No.	0
Data bit	7bit
Stop bit	1bit
Parity bit	Even
Control Method	DTR control
Communication format	RS-232
Sum check	Done
Protocol	transmission control procedure 1

*1 Indicates only the transmission speeds that can be set on the GOT side.

*2 The transmission speed setting must be consistent with that of the GOT side.
For the transmission speed setting on the GOT side, refer to the following.
Page 87 Communication detail settings

*3 The setting range varies with the connected PLC.

Connecting to the intelligent serial port module

■For transmission control procedure1

Item	Set value
Transmission speed	19200bps
Station No.	0
Data bit	7bit
Stop bit	1bit
Parity bit	Even
Control Method	None
Communication format	For RS-232 communication: RS-232 MODE switch 2 For RS-422 communication: RS-422 MODE switch 2
Sum check	Done

■For transmission control procedure2

Item	Set value
Transmission speed	19200bps
Station No.	0
Data bit	7bit
Stop bit	1bit
Parity bit	Even
Control Method	None
Communication format	For RS-232 communication: RS-232 MODE switch 9 For RS-422 communication: RS-422 MODE switch 9
Sum check	Done

2.3 Ethernet Connection

Connecting to EHV or MICRO-EHV series

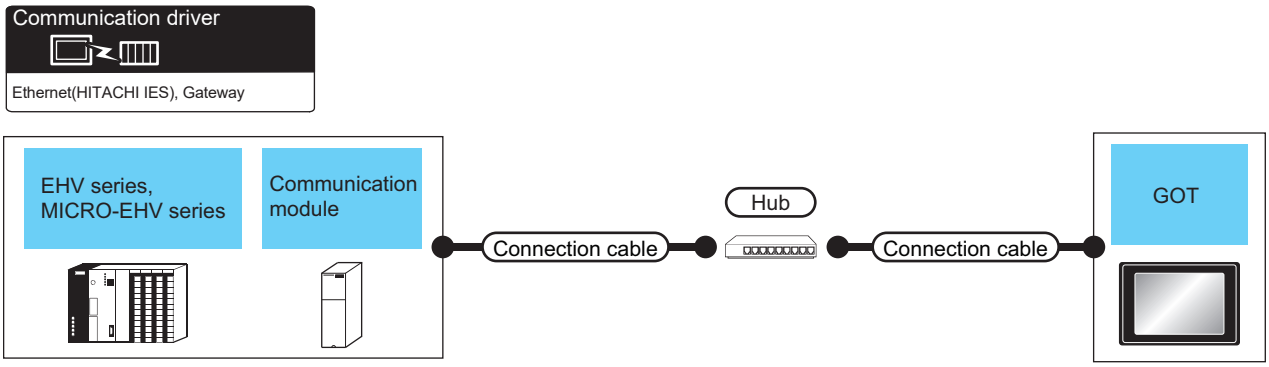

PLC		Connection cable *2	Maximum segment length *3	GOT		Number of connectable equipment
Model name	Communication module *1			Option device *4	Model	
EHV-CPU08 EHV-CPU16 EHV-CPU32 EHV-CPU64 EHV-CPU128	-	• 100BASE-TX Shielded twisted pair cable (STP) or unshielded twisted pair cable (UTP) of category 5 or higher • 10BASE-T Shielded twisted pair cable (STP) or unshielded twisted pair cable (UTP) of category 3 or higher	100m	- (Built into GOT)	GT27 GT25 GT23	When PLC: GOT is N:1 128 PLCs or less for 1 GOT When PLC: GOT is 1: N 4 GOTs or less for 1 PLC
				GT25-J71E71-100	GT27 GT25	
	EH-ETH EH-ETH2 EH-ELK EH-ORML EH-R2LH EH-OR2LH			- (Built into GOT)	GT27 GT25 GT23	When PLC: GOT is N:1 128 PLCs or less for 1 GOT When PLC: GOT is 1: N 36 GOTs or less for 1 PLC *5
				GT25-J71E71-100	GT27 GT25	
MVH-A40□□□ MVH-D40□□□ MVH-A64□□□ MVH-D64□□□	-			- (Built into GOT)	GT27 GT25 GT23	When PLC: GOT is N:1 128 PLCs or less for 1 GOT When PLC: GOT is 1: N 4 GOTs or less for 1 PLC
				GT25-J71E71-100	GT27 GT25	

*1 Product manufactured by HITACHI Industrial Equipment Systems Co., Ltd. For details of this product, contact HITACHI Industrial Equipment Systems Co., Ltd.

*2 The destination connected with the twisted pair cable varies with the configuration of the applicable Ethernet network system.
Connect to the Ethernet module, hub, transceiver or other system equipment corresponding to the applicable Ethernet network system.
Use cables, connectors, and hubs that meet the IEEE802.3 10BASE-T/100BASE-TX standards.
To connect the target device and hub, use a cable according to the target device configuration.

*3 A length between a hub and a node.
The maximum distance differs depending on the Ethernet device to be used.
The following shows the number of the connectable nodes when a repeater hub is used.
• 10BASE-T: Max. 4 nodes for a cascade connection (500m)
• 100BASE-TX: Max. 2 nodes for a cascade connection (205m)
When switching hubs are used, the cascade connection between the switching hubs has no logical limit for the number of cascades.
For the limit, contact the switching hub manufacturer.

*4 GT25-W, GT2505-V does not support the option device.

*5 The number of connectable GOTs differs depending on the communication module to be used.
The number of GOTs connectable to one PLC can be calculated as follows.
[Number of logical port] × ([Built-in Ethernet port of PLC] + [Communication module])

Model name	Description	Number of logical ports	Number of communication modules that can be used together for one PLC
EH-ETH	Ethernet module	4	2
EH-ETH2	Ethernet module	4	8
EH-ELK	Ethernet large capacity CPU link module	2	2
EH-ORML	Optical remote module (Slave station)	4	1
EH-R2LH	H series compatible coaxial remote module (Slave station)	4	1
EH-OR2LH	H series compatible optical remote module (Slave station)	4	1

GOT side settings

Setting communication interface (Communication settings)

Set the channel of the connected equipment.

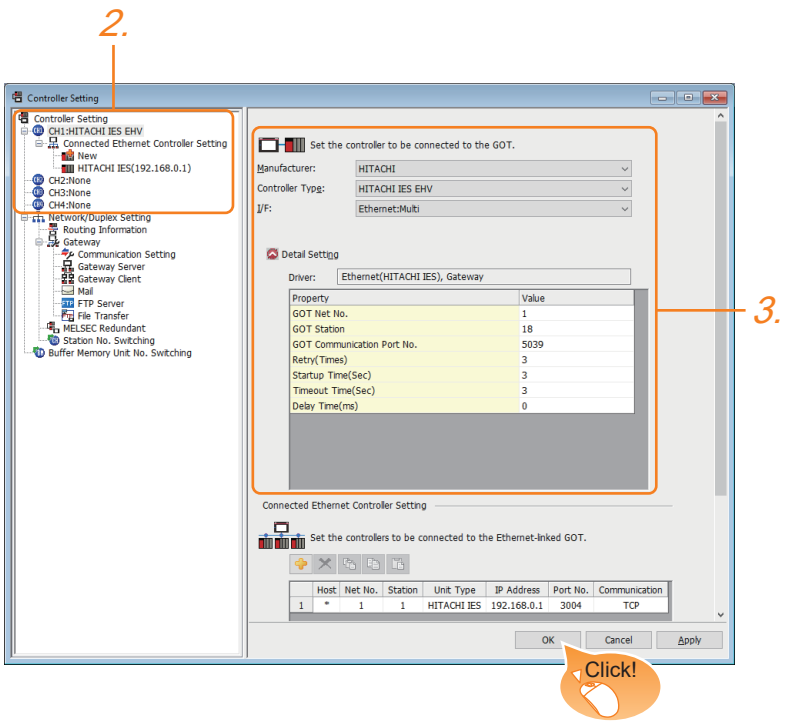

1. Select [Common] → [Controller Setting] from the menu.

2. In the [Controller Setting] window, select the channel No. to be used from the list menu.

3. Set the following items.

- [Manufacturer]: [HITACHI]
- [Controller Type]: [HITACHI IES EHV]
- [I/F]: [Ethernet: Multi]
- [Detail Setting]: Configure the settings according to the usage environment.

☞ Page 93 Communication detail settings

4. When you have completed the setting, click the [OK] button.

Point

The settings of connecting equipment can be confirmed in [I/F Communication Setting].
For details, refer to the following.
☞ Page 48 I/F communication setting

Communication detail settings

Make the settings according to the usage environment.

Property	Value
GOT Net No.	1
GOT Station	18
GOT Communication Port No.	5039
Retry(Times)	3
Startup Time(Sec)	3
Timeout Time(Sec)	3
Delay Time(ms)	0

Item	Description	Range
GOT Net No.	Set the network No. of the GOT. (Default: 1)	1 to 239
GOT Station *1	Set the station No. of the GOT. (Default: 18)	1 to 254
GOT Communication Port No.	Set the GOT port No. for the connection with the Ethernet equipment. (Default: 5039 *2)	1024 to 5010, 5014 to 49152, 49171 to 65534
Retry	Set the number of retries to be performed when a communication timeout occurs. When receiving no response after retries, the communication times out. (Default: 3times)	0 to 5times
Startup Time	Specify the time period from the GOT startup until GOT starts the communication with the PLC CPU. (Default: 3sec)	3 to 255sec
Timeout Time	Set the time period for a communication to time out. (Default: 3sec)	1 to 90sec
Delay Time	Set the delay time for reducing the load of the network/destination PLC. (Default: 0ms)	0 to 10000(ms)

*1 Set different values for [GOT Station] of [Detail Setting] and [Station] of [Connected Ethernet Controller Setting].
☞ Page 95 Connected Ethernet controller setting

*2 When assigning the same driver to the multiple channels, in the communication drivers set as the second and following, the default value of [GOT Communication Port No.] becomes the earliest number in the vacant numbers of No. 6000 and later.

Point

• Communication interface setting by the Utility

The communication interface setting can be changed on the Utility's [Communication Settings] after writing [Communication Settings] of project data.

For details on the Utility, refer to the following manual.

GOT2000 Series User's Manual (Utility)

• Precedence in communication settings

When settings are made by GT Designer3 or the Utility, the latest setting is effective.

GOT Ethernet Setting

The GOT can be connected to a different network by configuring the following setting.

■GOT IP address setting

Set the following communication port setting.

- Standard port (When using GT25-W, port 1)
- Extension port (When using GT25-W, port 2)

■GOT Ethernet common setting

Set the following setting which is common to the standard port and the extension port, or port 1 and port 2.

- [Default Gateway]
- [Peripheral S/W Communication Port No.]
- [Transparent Port No.]

■IP filter setting

By configuring the IP filter setting, the access from the specific IP address can be permitted or shut off.

For the detailed settings, refer to the following manual.

☞ Page 44 GOT Ethernet Setting

Connected Ethernet controller setting

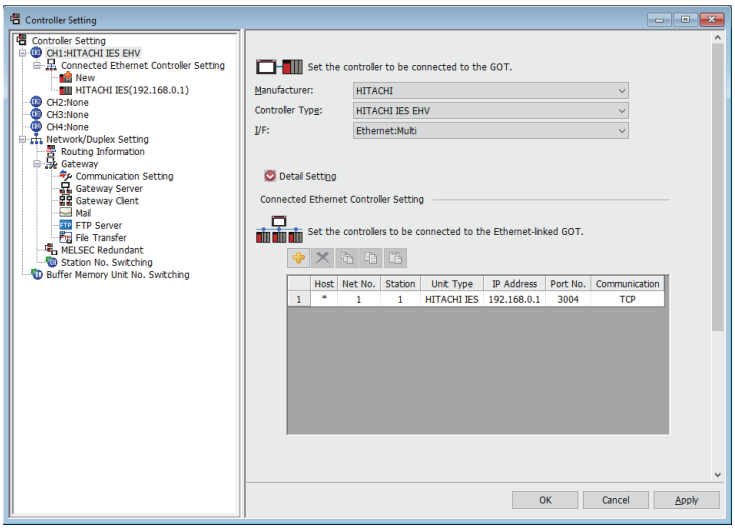

Item	Description	Set value
Host	The host is displayed. It refers to a station that can be connected without setting a station number. (The host is indicated with an asterisk (*).)	-
Net No. *3	Set the network No. of the connected Ethernet equipment. (Default: 1)	1 to 239
Station *2*3	Set the station No. of the connected Ethernet equipment. (Default: 1)	1 to 254
Unit Type	HITACHI IES (fixed)	HITACHI IES (fixed)
IP address *1	Set the IP address of the connected Ethernet equipment. (Default: 192.168.0.1)	PLC side IP address
Port No. *4	Set the port No. of the connected Ethernet equipment. (Default: 3004)	1024 to 65534
Communication format	Select a communication protocol. (Default: TCP)	UDP, TCP

*1 Connection with the PLC is unavailable if the IP address is the default value.
Set the value to the IP address of the PLC to be connected.

*2 Set different values for [GOT Station] of [Detail Setting] and [Station] of [Connected Ethernet Controller Setting].
☞ Page 93 Communication detail settings

*3 It is used to identify the connected Ethernet equipment, but not used for the actual communication with the connected Ethernet equipment.

*4 Four communication ports can be set for the PLC and communication module.
Since a piece of equipment can be connected to one port, set the port No. for each controller.

PLC side setting

Point

For details of the HITACHI IES PLC, refer to the following manual.

HITACHI IES PLC user's Manual

Model name		Refer to
EHV series (built-in Ethernet interface) MICRO-EHV series (built-in Ethernet interface)		Page 96 When connecting to EHV series and MICRO-EHV series (built-in Ethernet interface)
Ethernet module	EH-ETH2	Page 97 When connecting to Ethernet module (EH-ETH2)

When connecting to EHV series and MICRO-EHV series (built-in Ethernet interface)

Configure the settings using the engineering tool for the EHV series.

The following shows examples of settings.

Item		Set value	Range
IP Address *1		[ ].[ ].[ ].[ ]	PLC side IP address
Subnet Mask		[ ].[ ].[ ].[ ]	PLC side setting
Default Gateway		[ ].[ ].[ ].[ ]	
Transmission speed/method		AUTO	AUTO, 100M/Full duplex, 10M/Half duplex
Port 1	Valid / Invalid	Valid	PLC side setting
	Port No.	3004	
	Protocol	TCP/IP	
Port 2	Valid / Invalid	Valid	
	Port No.	3005	
	Protocol	TCP/IP	
Port 3	Valid / Invalid	Valid	
	Port No.	3006	
	Protocol	TCP/IP	
Port 4	Valid / Invalid	Valid	
	Port No.	3007	
	Protocol	TCP/IP	
Time out *2		30(sec)	

*1 Adjust the settings with GOT settings.
Page 95 Connected Ethernet controller setting

*2 Set a value greater than 3 seconds.
When it is set to three seconds or less, a timeout may occur even when there is no network failure due to cable disconnection.

When connecting to Ethernet module (EH-ETH2)

■Setting DIP switches

Set the operation mode using DIP switches.

Setting DIP switches	Operation mode	Description
All switches OFF 	Normal operation mode	Normal operation is performed.
No.5, 6 ON 	Utility mode	A transmission/reception test is performed.
No.4, 6 ON 		Set the Ethernet information using a ladder program.
No.1 ON No.4 to 8: Fourth octet of IP address 	Communication parameter setting mode	Set the Ethernet information and ASR information using the engineering tool for EH-ETH2. Nos. 4 to 8 are assigned as the temporary IP address for the communication parameter setting mode. For details, refer to the following. ☞ Page 97 Communication parameter setting mode

■Communication parameter setting mode

When the DIP switch No.1 of EH-ETH2 is ON and Nos.2 and 3 are OFF, Nos. 4 to 8 are assigned as the temporary IP address for the communication parameter setting mode.

Up to the third octet of the temporary IP address is fixed to [192.168.0.**], and the forth octet (lower 5 bits) is determined with by the ON or OFF status of Nos.4 to 8.

The values that can be set are [192.168.0.1] to [192.168.0.31]. [192.168.0.0] cannot be set.

After changing the DIP switches, turn on and then off the PLC.

When an IP address that can be connected to a personal computer has already been set, setting the temporary IP address is not required.

The following describes the IP address for communication parameter setting mode corresponding to the ON or OFF status of the DIP switch Nos.4 to 8.

DIP switch status					Binary	Hexadecimal	Decimal	IP address for communication parameter setting mode
4	5	6	7	8				
OFF	OFF	OFF	OFF	ON	b'00001	H'01	1	192.168.0.1
ON	OFF	ON	ON	ON	b'10110	H'16	22	192.168.0.22
ON	ON	ON	ON	ON	b'11111	H'1F	31	192.168.0.31

■Network setting using the engineering tool for EH-ETH2

Use the engineering tool for EH-ETH2 to set the IP address, subnet mask, and others.

When the temporary IP address has been set, input the temporary IP address when starting the engineering tool for EH-ETH2.

After the network setting, when the temporary IP address has been set, return all DIP switches to their original positions and turn on and then off the PLC again.

The following shows examples of settings.

Item		Set value	Range
IP address setting	IP Address *1	[ ].[ ].[ ].[ ]	PLC side IP address
	Subnet Mask	[ ].[ ].[ ].[ ]	PLC side setting
	Default Gateway	[ ].[ ].[ ].[ ]	
	Communication speed/mode	Auto Negotiation	Auto Negotiation, 100Mbps/Full Duplex, 10Mbps/Half Duplex
Connection destination setting for communication check	IP address	[ ].[ ].[ ].[ ]	Connection destination setting
	Port No.	4000	
Task code communication port setting	Task code port timeout	Enable	Enable, Disable
	Timeout time *2	30(sec)	PLC side setting
Port 1	Port No.	3004	
	Protocol	TCP/IP	
Port 2	Port No.	3005	
	Protocol	TCP/IP	
Port 3	Port No.	3006	
	Protocol	TCP/IP	
Port 4	Port No.	3007	
	Protocol	TCP/IP	

*1 Adjust the settings with GOT settings.
☞ Page 95 Connected Ethernet controller setting

*2 Set a value greater than 3 seconds.
When it is set to three seconds or less, a timeout may occur even when there is no network failure due to cable disconnection.

2.4 Settable Device Range

For the device setting dialog and range of devices usable in the GOT, refer to the following.

☞ Page 538 HITACHI IES equipment ([HITACHI IES EHV])
☞ Page 544 HITACHI IES equipment ([HITACHI IES HIDIC H])

MEMO

3 HITACHI PLC

- Page 101 Connectable Model List
- Page 102 Serial connection
- Page 110 Ethernet Connection
- Page 116 Settable Device Range

3.1 Connectable Model List

The following table shows the connectable models.

Series	Model name	Clock	Communication Type	Connectable model	Refer to
S10V	LQP510	○	RS-232 RS-422	GT27 GT25 GT23	☞ Page 102 Connecting to S10V
	LQP520				
S10mini	LQP800	○	RS-232 RS-422	GT27 GT25 GT23	☞ Page 103 Connecting to S10mini
	LQP000				
	LQP010				
	LQP011				
	LQP120				
S10VE	LQP600	○	Ethernet	GT27 GT25 GT23	☞ Page 110 Connecting to S10VE

3.2 Serial connection

Connecting to S10V

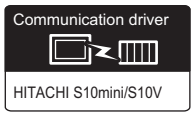

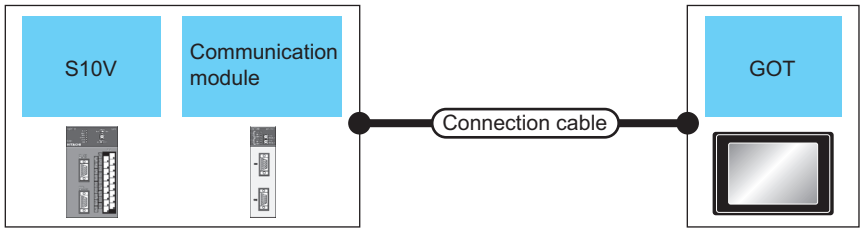

PLC			Connection cable		GOT		Number of connectable equipment
Model name	Communication module*1	Communication Type	Cable model Connection diagram number	Max. distance	Option device*2	Model	
LQP510 LQP520	LQE560	RS-232	GT09-C30R21301-9S (3m) or User preparing RS-232 connection diagram 1)	15m	- (Built into GOT)	GT27 GT25 GT23	1 GOT for 1 communication module
					GT15-RS2-9P	GT27 GT25	
	LQE565	RS-422	GT09-C30R41301-9S (3m) GT09-C100R41301-9S(10m) GT09-C200R41301-9S(20m) GT09-C300R41301-9S(30m) or User preparing RS-422 connection diagram 1)	500m	- (Built into GOT)	GT27 GT25 GT23	
					GT15-RS4-9S	GT27 GT25	
LQP510		RS-422	GT09-C30R41301-9S (3m) GT09-C100R41301-9S(10m) GT09-C200R41301-9S(20m) GT09-C300R41301-9S(30m) or User preparing RS-422 connection diagram 1)	500m	- (Built into GOT)	GT27 GT25 GT23	1 GOT for 1 PLC
					GT15-RS4-9S	GT27 GT25	

*1 Product manufactured by Hitachi, Ltd.For details of the product, contact Hitachi, Ltd.
*2 GT25-W, GT2505-V does not support the option device.

Connecting to S10mini

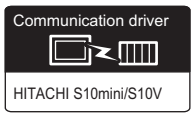

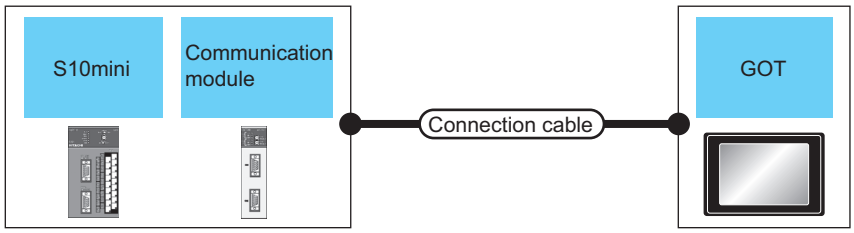

PLC			Connection cable		GOT		Number of connectable equipment
Series	Communication module*1	Communication Type	Cable model Connection diagram number	Max. distance	Option device*2	Model	
S10mini	LQE560 LQE060 LQE160	RS-232	GT09-C30R21301-9S (3m) or User preparing RS-232 connection diagram 1)	15m	- (Built into GOT)	GT27 GT25 GT23	1 GOT for 1 communication module
					GT15-RS2-9P	GT27 GT25	
	LQE565 LQE165	RS-422	GT09-C30R41301-9S (3m) GT09-C100R41301-9S(10m) GT09-C200R41301-9S(20m) GT09-C300R41301-9S(30m) or User preparing RS-422 connection diagram 1)	500m	- (Built into GOT)	GT27 GT25 GT23	
					GT15-RS4-9S	GT27 GT25	

*1 Product manufactured by Hitachi, Ltd.For details of the product, contact Hitachi, Ltd.

*2 GT25-W, GT2505-V does not support the option device.

Connection diagram

The following diagram shows the connection between the GOT and the PLC.

RS-232 cable

■ Connection diagram

• RS-232 connection diagram 1)

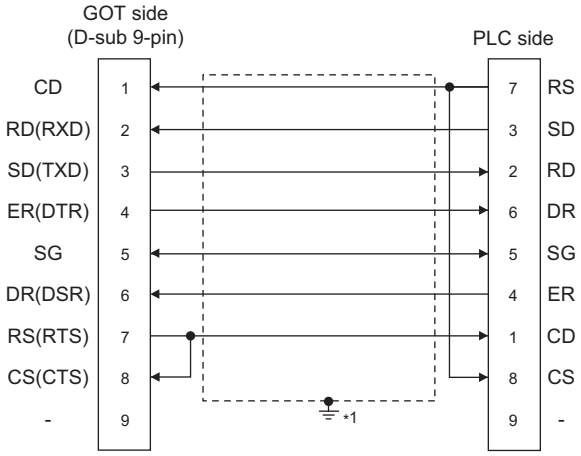

*1 Connect FG grounding to the appropriate part of a cable shield line.

■Precautions when preparing a cable

• Cable length

The length of the RS-232 cable must be 15m or less.

• GOT side connector

☞ Page 58 GOT connector specifications

• HITACHI PLC side connector

Use the connector supporting the HITACHI PLC side module.

For details, refer to the HITACHI PLC user's manual.

RS-422 cable

■Connection diagram

• RS-422 connection diagram 1)

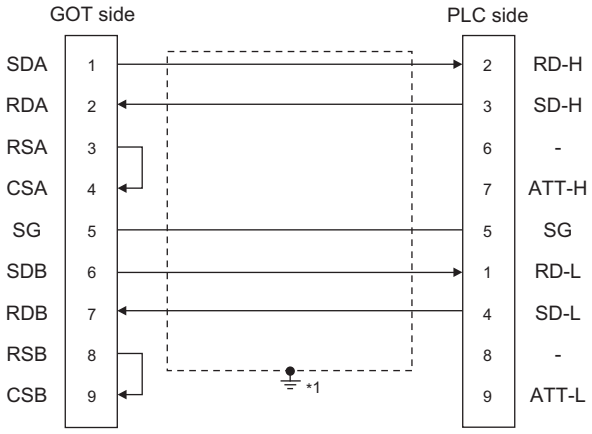

*1 Connect FG grounding to the appropriate part of a cable shield line.

■Precautions when preparing a cable

• Cable length

The length of the RS-422 cable must be 500m or less.

• GOT side connector

For the GOT side connector, refer to the following.

☞ Page 58 GOT connector specifications

• HITACHI PLC side connector

Use the connector compatible with the HITACHI PLC side module.

For details, refer to the HITACHI PLC user's manual.

■Connecting terminating resistors

• GOT side

◇For GT27,GT25(Except GT2505-V), GT23

Set the terminating resistor setting switch of the GOT main unit to "Disable".

◇For GT2505-V

Set the terminating resistor selector to "330Ω".

For the procedure to set the terminating resistor, refer to the following.

☞ Page 62 Terminating resistors of GOT

GOT Side Settings

Setting communication interface (Communication settings)

Set the channel of the connected equipment.

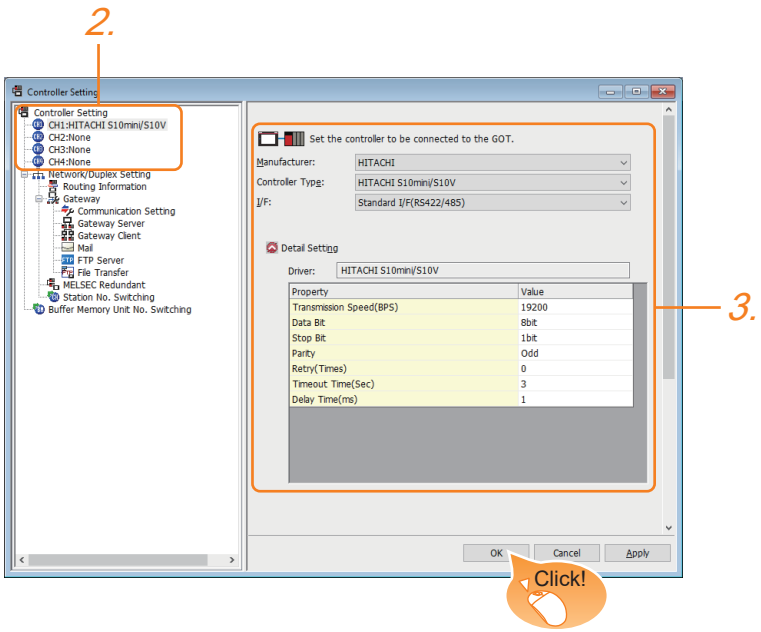

1. Select [Common] → [Controller Setting] from the menu.

2. In the [Controller Setting] window, select the channel No. to be used from the list menu.

3. Set the following items.

- [Manufacturer]: [HITACHI]
- [Controller Type]: [HITACHI S10mini/S10V]
- [I/F]: Interface to be used
- [Detail Setting]: Configure the settings according to the usage environment.

☞ Page 107 Communication detail settings

4. When you have completed the settings, click the [OK] button.

Point

The settings of connecting equipment can be confirmed in [I/F Communication Setting].
For details, refer to the following.
☞ Page 48 I/F communication setting

Communication detail settings

Make the settings according to the usage environment.

Property	Value
Transmission Speed(BPS)	19200
Data Bit	8 bit
Stop Bit	1 bit
Parity	Odd
Retry(Times)	0
Timeout Time(Sec)	3
Delay Time(ms)	1

Item	Description	Range
Transmission Speed	Set this item when change the transmission speed used for communication with the connected equipment. (Default: 19200bps)	9600bps, 19200bps, 38400bps, 57600bps, 115200bps
Data Bit	Set this item when change the data length used for communication with the connected equipment. (Default: 8bits)	7bits/8bits
Stop Bit	Specify the stop bit length for communications. (Default: 8bits)	1bit/2bits
Parity	Specify whether or not to perform a parity check, and how it is performed during communication. (Default: Odd)	None Even Odd
Retry	Set the number of retries to be performed when a communication error occurs. (Default: 0time)	0 to 5times
Timeout Time	Set the time period for a communication to time out. (Default: 3sec)	1 to 30sec
Delay Time	Set this item to adjust the transmission timing of the communication request from the GOT. (Default: 0ms)	0 to 300 (ms)

Point

• Communication interface setting by the Utility

The communication interface setting can be changed on the Utility's [Communication Settings] after writing [Communication Settings] of project data.

For details on the Utility, refer to the following manual.

GOT2000 Series User's Manual (Utility)

• Precedence in communication settings

When settings are made by GT Designer3 or the Utility, the latest setting is effective.

PLC Side Setting

Point

HITACHI PLC

For details of HITACHI PLCs, refer to the following manuals.

HITACHI PLC user's Manual

Model name		Refer to
Communication module	LQE560	☞ Page 108 PLC Side Setting
	LQE060	
	LQE160	
	LQE565	
	LQE165	

Connecting to communication module

■Communication settings

Make the communication settings of the Communication module.

Item	Set value
Channel No. setting*1*2	#0 to #3
Protocol setting	H-7338 protocol
Transmission speed	19200bps (fixed)
Data bit	8bits (fixed)
Parity bit	Odd (fixed)
Start bit	1 bit (fixed)
Stop bit	1 bit (fixed)

*1 The ranges of available channel No. differ depending on the model of communication module.

*2 Avoid duplication of the channel No.

■Settings by switch

Make the communication settings using each setting switch.

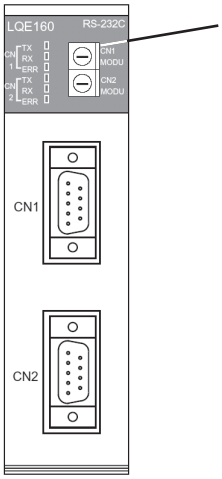

Setting switches for the channel No. and the protocol
CN1 MODU, CN2 MODU

- Settings of the channel No. and the protocol

CN1
MODU

CN2
MODU

Switch position	Protocol	Channel No.
8	H-7338	#0
9		#1
A		#2
B		#3

3.3 Ethernet Connection

Connecting to S10VE

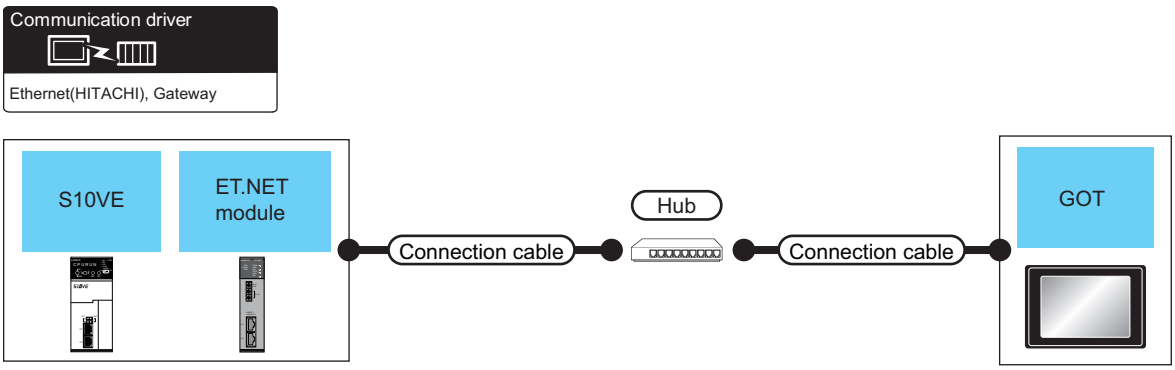

PLC		Connection cable *2	Max. distance	GOT		Number of connectable equipment
Model name	ET.NET module *1			Option device *3	Model	
LQP600	-	• 100BASE-TX Unshielded twisted pair cable (UTP): Category 5e or higher • 10BASE-T Unshielded twisted pair cable (UTP): Category 5e or higher	100m	- (Built into GOT)	GT27 GT25 GT23	1 CPU for up to 2 GOTs
				GT25-J71E71-100	GT27 GT25	
	LQE260-E			- (Built into GOT)	GT27 GT25 GT23	1 module for up to 2 GOTs
				GT25-J71E71-100	GT27 GT25	

*1 Product manufactured by Hitachi, Ltd. For details of the product, contact Hitachi, Ltd.

*2 The destination connected with the twisted pair cable varies with the configuration of the applicable Ethernet network system.
Connect to the Ethernet module, hub, transceiver or other system equipment corresponding to the applicable Ethernet network system.
Use cables, connectors, and hubs that meet the IEEE802.3 10BASE-T/100BASE-TX standards.
To connect the target device and hub, use a cable according to the target device configuration.
When the GOT is directly connected to the CPU with an Ethernet cable, use a cross cable.

*3 GT25-W, GT2505-V does not support the option device.

Setting communication interface (Communication settings)

Set the channel of the connected equipment.

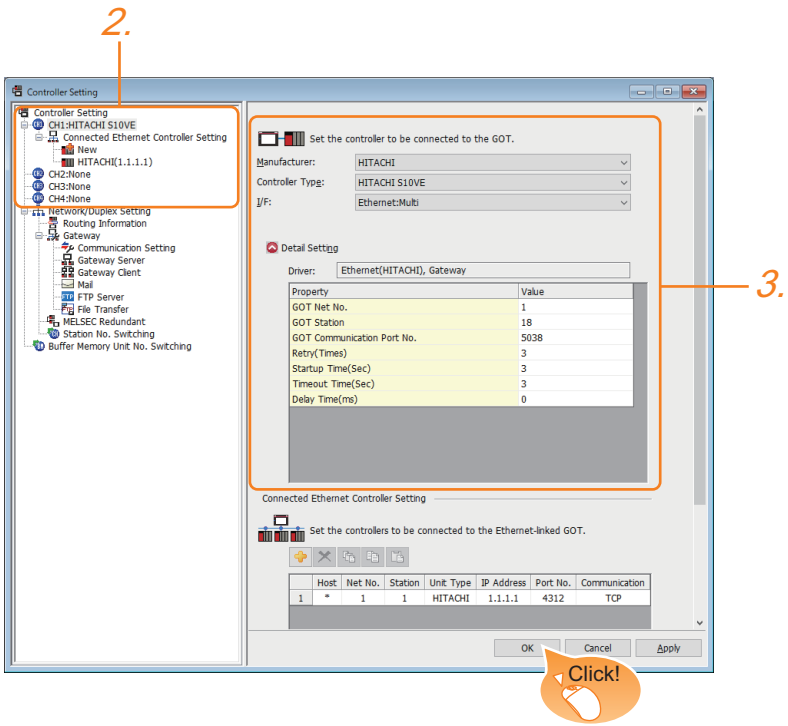

1. Select [Common] → [Controller Setting] from the menu.

2. In the [Controller Setting] window, select the channel No. to be used from the list menu.

3. Set the following items.

- [Manufacturer]: [HITACHI]
- [Controller Type]: [HITACHI S10VE]
- [I/F]: [Ethernet:Multi]
- [Detail Setting]: Configure the settings according to the usage environment.

☞ Page 112 Communication detail settings

4. When you have completed the settings, click the [OK] button.

Point

The settings of connecting equipment can be confirmed in [I/F Communication Setting].
For details, refer to the following.

☞ Page 48 I/F communication setting

Communication detail settings

Make the settings according to the usage environment.

Property	Value
GOT Net No.	1
GOT Station	18
GOT Communication Port No.	5038
Retry(Times)	3
Startup Time(Sec)	3
Timeout Time(Sec)	3
Delay Time(ms)	0

Item	Description	Range
GOT Net No.	Set the network No. of the GOT. (Default: 1)	1 to 239
GOT Station *1	Set the station No. of the GOT. (Default: 18)	1 to 254
GOT Communication Port No.	Set the GOT port No. for the connection with the Ethernet equipment. (Default: 5038*2)	1024 to 5010, 5014 to 49152, 49171 to 65534
Retry	Set the number of retries to be performed when a communication timeout occurs. When receiving no response after retries, the communication times out. (Default: 3times)	0 to 5times
Startup Time	Specify the time period from the GOT startup until GOT starts the communication with the PLC CPU. (Default: 3sec)	3 to 255sec
Timeout Time	Set the time period for a communication to time out. (Default: 3sec)	1 to 90sec
Delay Time	Set the delay time for reducing the load of the network/destination PLC. (Default: 0ms)	0 to 10000(ms)

*1 Set different values for [GOT Station] of [Detail Setting] and [Station] of [Connected Ethernet Controller Setting].
☞ Page 152 Connected Ethernet Controller Setting

*2 When assigning the same driver to the multiple channels, in the communication drivers set as the second and following, the default value of [GOT Communication Port No.] becomes the earliest number in the vacant numbers of No. 6000 and later.

Point

• Communication interface setting by the Utility

The communication interface setting can be changed on the Utility's [Communication Settings] after writing [Communication Settings] of project data.

For details on the Utility, refer to the following manual.

GOT2000 Series User's Manual (Utility)

• Precedence in communication settings

When settings are made by GT Designer3 or the Utility, the latest setting is effective.

GOT Ethernet Setting

The GOT can be connected to a different network by configuring the following setting.

■GOT IP address setting

Set the following communication port setting.

- Standard port (When using GT25-W, port 1)
- Extension port (When using GT25-W, port 2)

■GOT Ethernet common setting

Set the following setting which is common to the standard port and the extension port, or port 1 and port 2.

- [Default Gateway]
- [Peripheral S/W Communication Port No.]
- [Transparent Port No.]

■IP filter setting

By configuring the IP filter setting, the access from the specific IP address can be permitted or shut off.

For the detailed settings, refer to the following manual.

☞ Page 44 GOT Ethernet Setting

Connected Ethernet Controller Setting

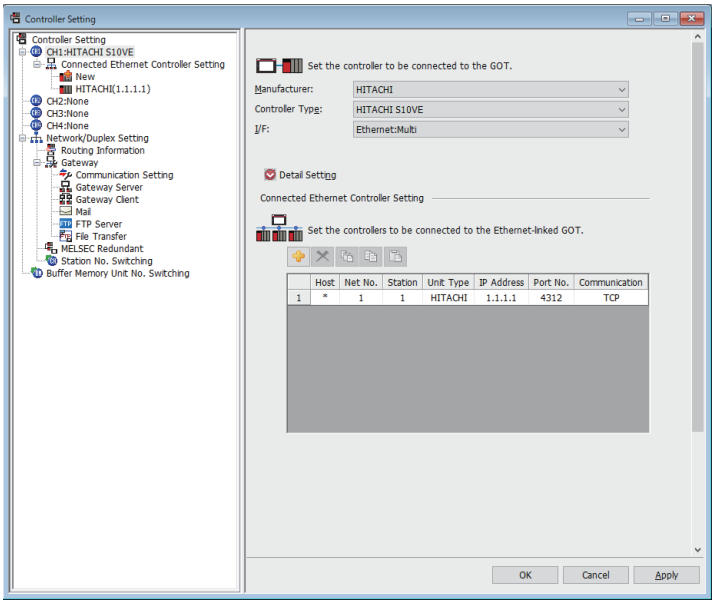

Item	Description	Set value
Host	The host is displayed. It refers to a station that can be connected without setting a station number. (The host is indicated with an asterisk (*).)	—
Net No.	Set the network No. of the connected Ethernet equipment. (Default: 1)	1 to 239
Station *2	Set the station No. of the connected Ethernet equipment. (Default: 1)	1 to 254
Unit Type	HITACHI (fixed)	HITACHI (fixed)
IP address *1	Set the IP address of the connected Ethernet equipment. (Default: 1.1.1.1)	PLC side IP address
Port No.	Set the port No. of the connected Ethernet equipment. (Default: 4312)	4311 to 4315 *3
Communication format	TCP (fixed)	TCP (fixed)

*1 Connection with the PLC is unavailable if the IP address is the default value.
Set the value to the IP address of the PLC to be connected.

*2 Set different values for [GOT Station] of [Detail Setting] and [Station] of [Connected Ethernet Controller Setting].
☞ Page 112 Communication detail settings

*3 When the GOT is directly connected to the CPU, 4311 cannot be set.

PLC side setting

Point

HITACHI PLC

For details of HITACHI PLCs, refer to the following manuals.

HITACHI PLC user's Manual

Model name		Refer to
LQP600 (built-in Ethernet interface)		Page 114 When connecting to LQP600 (built-in Ethernet interface)
ET.NET module	LQE260-E	Page 115 When connecting to the ET.NET module (LQE260-E)

When connecting to LQP600 (built-in Ethernet interface)

■ET ST.No. switch setting

Set the IP address.

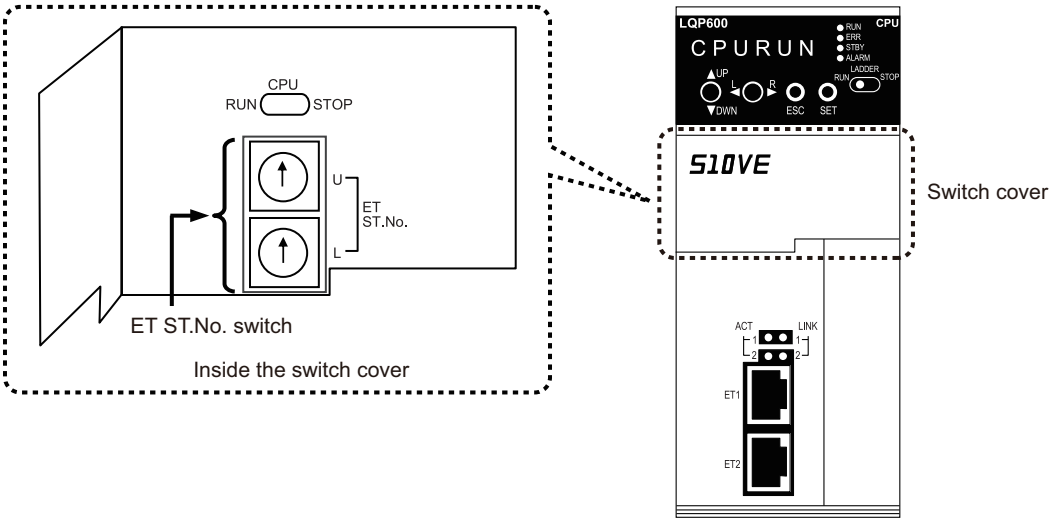

Setting value		Description
U	L	
F	F	ET1: 192.192.192.1 (fixed) ET2: 192.192.193.1 (fixed)
Other than the above combination		Set the IP address using the engineering tool for S10VE.

■Network setting using the engineering tool for S10VE

Use the engineering tool for S10VE to set the station No., IP address, and others.

For the station No., set the same value as the setting value of the ET ST.No. switch of the CPU module.

When connecting to the ET.NET module (LQE260-E)

■Switch setting

Set the switches accordingly.

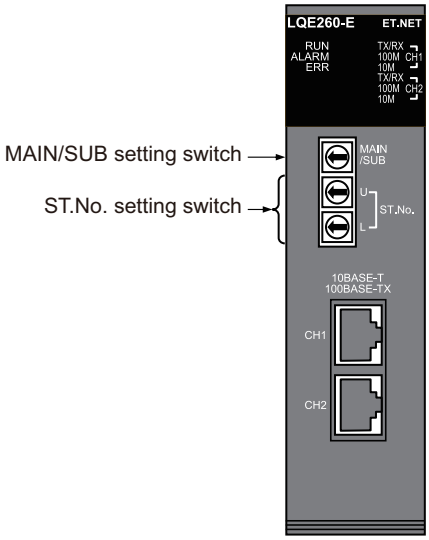

- MAIN/SUB setting switch

Set MAIN or SUB.

Setting value	Description
0	MAIN setting (normal mode) *1
1	SUB setting (normal mode) *1
2	MAIN setting (port open mode) *2
3	SUB setting (port open mode) *2
4 to F	Setting prohibited

*1 Configure different settings for MAIN and SUB in the same module.

*2 In this mode, port No. 5000 or later is opened.
When the port open mode is set, connection to the ET.NET module using a tool is not available.

- ST.No. setting switch

Set the IP address.

Setting value		Description
U	L	
0	0	Set the IP address using the engineering tool for S10VE.
F	F	CH1: 192.192.192.1 (fixed) CH2: 192.192.193.1 (fixed)
Other than the above combination		Setting prohibited

■Network setting using the engineering tool for S10VE

Use the engineering tool for S10VE to set the station No., IP address, and others.

3.4 Settable Device Range

For the device setting dialog and range of devices usable in the GOT, refer to the following.

☞ Page 549 HITACHI equipment ([HITACHI S10VE])
☞ Page 560 HITACHI equipment ([HITACHI S10mini/S10V])

4 FUJI PLC

- Page 117 Connectable Model List
- Page 118 Serial connection
- Page 149 Ethernet Connection
- Page 154 Settable Device Range
- Page 154 Precautions

4.1 Connectable Model List

The following table shows the connectable models.

Series	Model name	Clock	Communication Type	Connectable model	Refer to
MICREX-F	F55	×	RS-232 RS-485	GT27 GT25 GT23	☞ Page 118 Connecting to MICREX-F55
	F70	×	RS-232 RS-485	GT27 GT25 GT23	☞ Page 121 Connecting to MICREX-F70
	F120S F140S F15□S	×	RS-232 RS-485	GT27 GT25 GT23	☞ Page 125 Connecting to MICREX-F120S/140S/15□S
MICREX-SX SPH	SPH200 SPH300 SPH2000 SPH3000	×	RS-232 RS-485	GT27 GT25 GT21 GS *1	☞ Page 129 Connecting to MICREX-SX SPH
	SPH200 SPH300 SPH2000 SPH3000	×	Ethernet	GT27 GT25 GT21 GS	☞ Page 149 Connecting to MICREX-SX SPH

*1 For the RS-485 connection of GS21-W, use the RS-422 interface.

4.2 Serial connection

Connecting to MICREX-F55

For details on the system configuration on the PLC side, refer to the following section.

☞ Page 154 Precautions

When using the RS-232 interface card

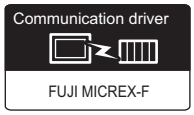

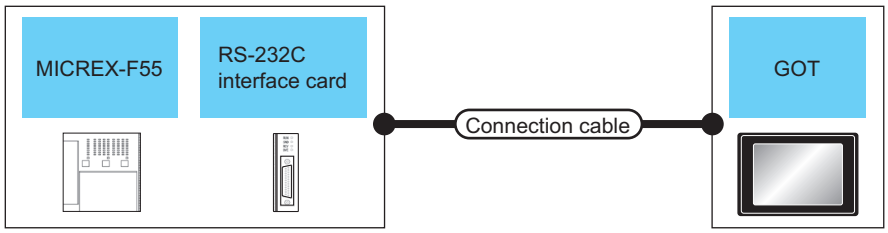

PLC			Connection cable		GOT		Number of connectable equipment
Model name	RS-232C interface card*1	Communication Type	Cable model Connection diagram number	Max. distance	Option device*2	Model	
F55	NV1L-RS2	RS-232	GT09-C30R21003-25P(3m) or User programming RS-232 connection diagram 1)	15m	- (Built into GOT)	GT27 GT25 GT23	1 GOT for 1 RS-232C interface card
					GT15-RS2-9P	GT27 GT25	

*1 Product manufactured by Fuji Electric Co., Ltd. For details of the product, contact Fuji Electric Co., Ltd.

*2 GT25-W, GT2505-V does not support the option device.

When using the RS-232C/485 interface capsule

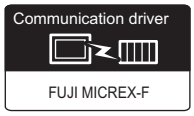

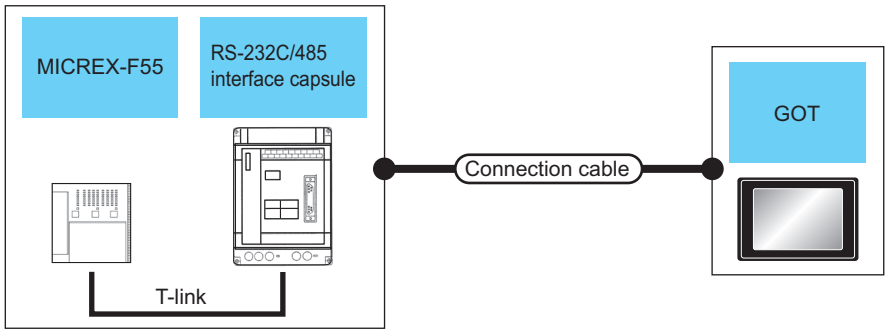

PLC			Connection cable		GOT		Number of connectable equipment
Model name	RS-232C/485 interface capsule*1	Communication Type	Cable model Connection diagram number	Max. distance	Option device*2	Model	
F55	FFK120A-C10	RS-232	GT09-C30R21003-25P(3m) or User preparing RS-232 connection diagram 1)	15m	- (Built into GOT)	GT27 GT25 GT23	1 GOT for 1 RS-232C/485 interface capsule
					GT15-RS2-9P	GT27 GT25	

*1 Product manufactured by Fuji Electric Co., Ltd. For details of the product, contact Fuji Electric Co., Ltd.

*2 GT25-W, GT2505-V does not support the option device.

When connecting to multiple PLCs

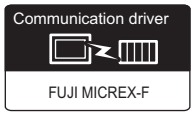

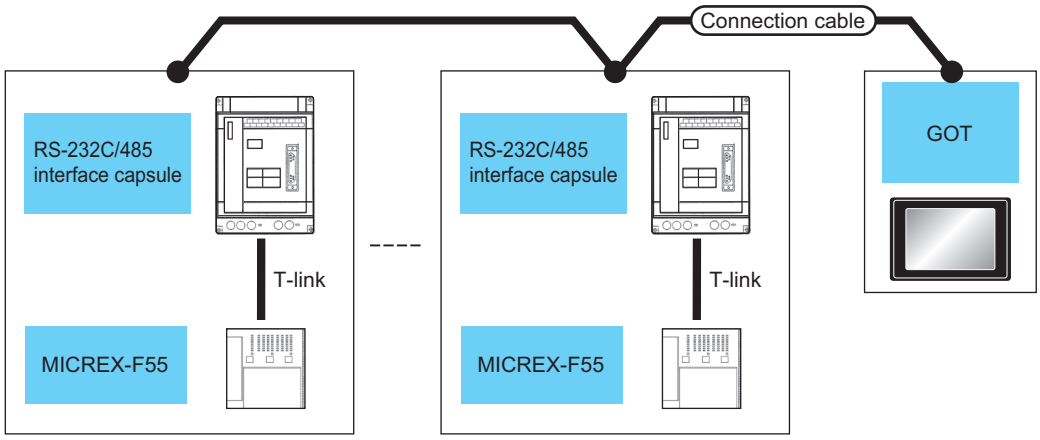

PLC			Connection cable		GOT		Number of connectable equipment
Model name	RS-232C/485 interface capsule*1	Communication Type	Cable model Connection diagram number	Max. distance	Option device*3	Model	
F55	FFK120A-C10	RS-485	GT09-C30R41001-6T(3m) GT09-C100R41001-6T(10m) GT09-C200R41001-6T(20m) GT09-C300R41001-6T(30m) or User preparing RS-485 connection diagram 1)	500m*2	- (Built into GOT)	GT27 GT25 GT23	1 GOT for up to 6 PLCs (RS-232C/485 interface capsules)
				500m	GT15-RS4-9S	GT27 GT25	

*1 Product manufactured by Fuji Electric Co., Ltd. For details of the product, contact Fuji Electric Co., Ltd.
*2 Including the cable length of the option devices.
*3 GT25-W, GT2505-V does not support the option device.

Connecting to MICREX-F70

For details on the system configuration on the PLC side, refer to the following.

☞ Page 154 Precautions

When using general-purpose interface modules

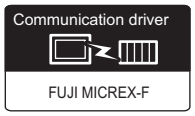

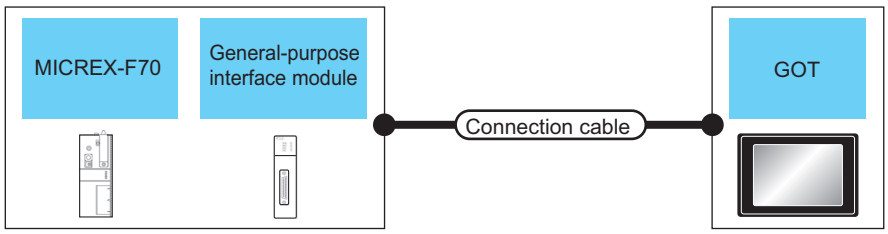

PLC			Connection cable		GOT		Number of connectable equipment
Model name	General-purpose interface module*1	Communication Type	Cable model Connection diagram number	Max. distance	Option device*2	Model	
F70	NC1L-RS2	RS-232	GT09-C30R21003-25P(3m) or User preparing RS-232 connection diagram 1)	15m	- (Built into GOT)	GT27 GT25 GT23	1 GOT for 1 general-purpose interface module
					GT15-RS2-9P	GT27 GT25	

*1 Product manufactured by Fuji Electric Co., Ltd. For details of the product, contact Fuji Electric Co., Ltd.

*2 GT25-W, GT2505-V does not support the option device.

When using the RS-232C/485 interface capsule

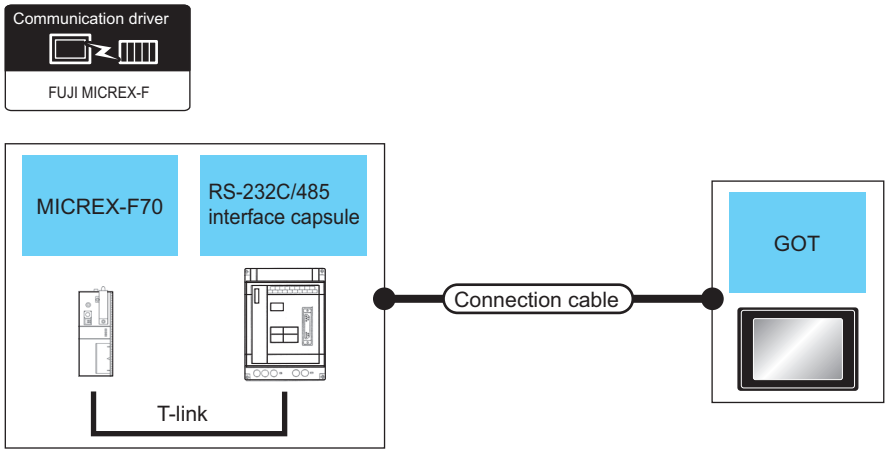

PLC			Connection cable		GOT		Number of connectable equipment
Model name	RS-232C/485 interface capsule*1	Communication Type	Cable model Connection diagram number	Max. distance	Option device*2	Model	
F70	FFK120A-C10	RS-232	GT09-C30R21003-25P(3m) or User preparing RS-232 connection diagram 1)	15m	- (Built into GOT)	GT27 GT25 GT23	1 GOT for 1 RS-232C/485 interface capsule
					GT15-RS2-9P	GT27 GT25	

*1 Product manufactured by Fuji Electric Co., Ltd. For details of the product, contact Fuji Electric Co., Ltd.
*2 GT25-W, GT2505-V does not support the option device.

When connecting to multiple PLCs (using RS-232C/485 interface capsules)

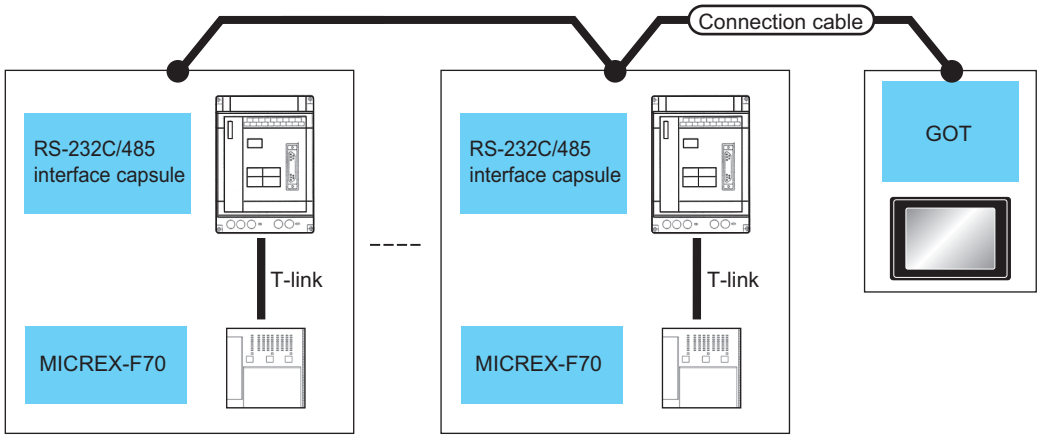

PLC			Connection cable		GOT		Number of connectable equipment
Model name	RS-232C/485 interface capsule*1	Communication Type	Cable model Connection diagram number	Max. distance	Option device*3	Model	
F70	FFK120A-C10	RS-485	GT09-C30R41001-6T(3m) GT09-C100R41001-6T(10m) GT09-C200R41001-6T(20m) GT09-C300R41001-6T(30m) or User preparing RS-485 connection diagram 1)	500m*2	- (Built into GOT)	GT27 GT25 GT23	1 GOT for up to 6 PLCs (RS-232C/485 interface capsules)
				500m	GT15-RS4-9S	GT27 GT25	

*1 Product manufactured by Fuji Electric Co., Ltd. For details of the product, contact Fuji Electric Co., Ltd.
*2 Including the cable length of the option devices.
*3 GT25-W, GT2505-V does not support the option device.

When connecting to multiple PLCs (using general-purpose interface modules)

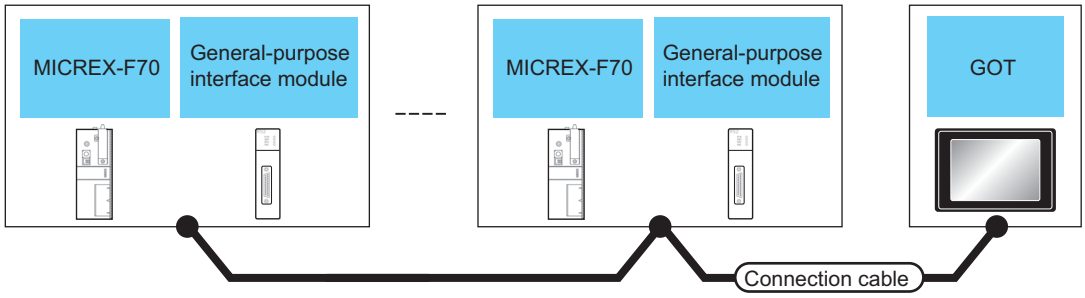

PLC			Connection cable		GOT		Number of connectable equipment
Model name	General-purpose interface module*1	Communication Type	Cable model Connection diagram number	Max. distance	Option device*3	Model	
F70	NC1L-RS4	RS-485	GT09-C30R41001-6T(3m) GT09-C100R41001-6T(10m) GT09-C200R41001-6T(20m) GT09-C300R41001-6T(30m) or User preparing RS-485 connection diagram 1)	500m*2	- (Built into GOT)	GT27 GT25 GT23	1 GOT for up to 31 PLCs (general-purpose interface modules)
				500m	GT15-RS4-9S	GT27 GT25	1 GOT for up to 10 PLCs (general-purpose interface modules)

*1 Product manufactured by Fuji Electric Co., Ltd. For details of the product, contact Fuji Electric Co., Ltd.
*2 Including the cable length of the option devices.
*3 GT25-W, GT2505-V does not support the option device.

Connecting to MICREX-F120S/140S/15□S

For details on the system configuration on the PLC side, refer to the following.

☞ Page 154 Precautions

When using general-purpose interface modules

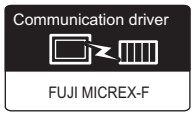

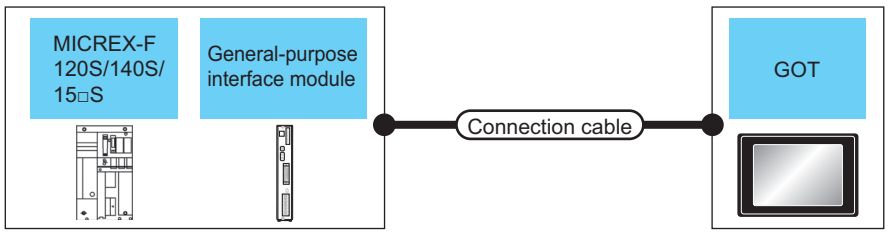

PLC			Connection cable		GOT		Number of connectable equipment
Model name	General-purpose interface module*1	Communication Type	Cable model Connection diagram number	Max. distance	Option device*2	Model	
F120S F140S F15□S	FFU120B	RS-232	GT09-C30R21003-25P(3m) or User preparing RS-232 connection diagram 1)	15m	- (Built into GOT)	GT27 GT25 GT23	1 GOT for 1 general-purpose interface module
					GT15-RS2-9P	GT27 GT25	

*1 Product manufactured by Fuji Electric Co., Ltd. For details of the product, contact Fuji Electric Co., Ltd.

*2 GT25-W, GT2505-V does not support the option device.

When using the RS-232C/485 interface capsule

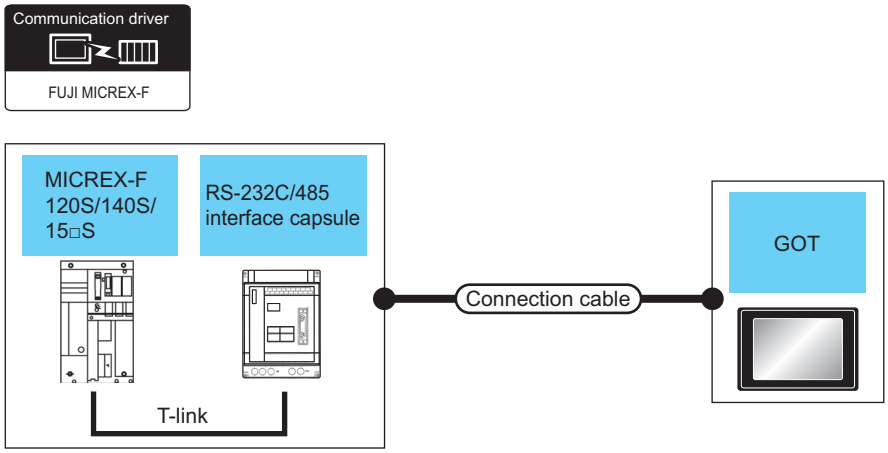

PLC			Connection cable		GOT		Number of connectable equipment
Model name	RS-232C/485 interface capsule*1	Communication Type	Cable model Connection diagram number	Max. distance	Option device*2	Model	
F120S F140S F15□S	FFK120A-C10	RS-232	GT09-C30R21003-25P(3m) or User preparing RS-232 connection diagram 1)	15m	- (Built into GOT)	GT27 GT25 GT23	1 GOT for 1 RS-232C/ 485 interface capsule
					GT15-RS2-9P	GT27 GT25	

*1 Product manufactured by Fuji Electric Co., Ltd. For details of the product, contact Fuji Electric Co., Ltd.
*2 GT25-W, GT2505-V does not support the option device.

When connecting to multiple PLCs (using RS-232C/485 interface capsules)

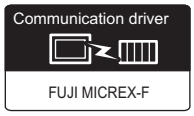

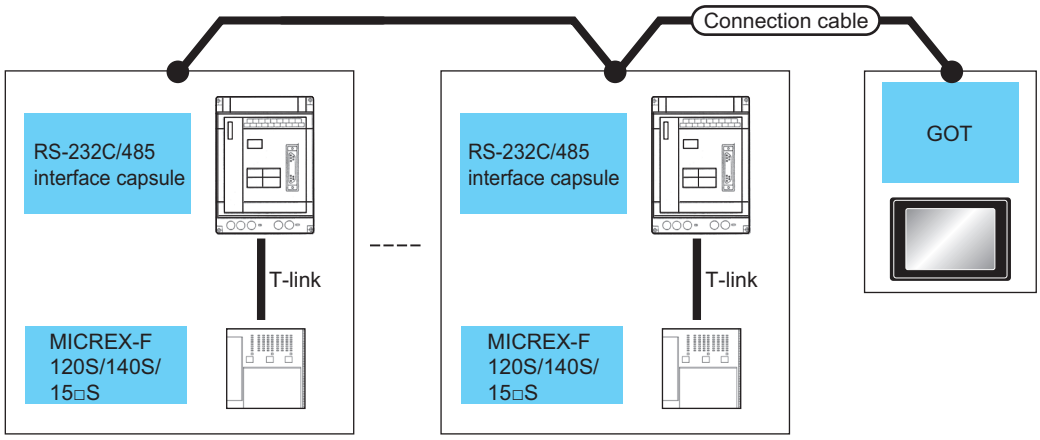

PLC			Connection cable		GOT		Number of connectable equipment
Model name	RS-232C/485 interface capsule[*1]	Communication Type	Cable model Connection diagram number	Max. distance	Option device[*3]	Model	
F120S F140S F15□S	FFK120A-C10	RS-485	GT09-C30R41001-6T(3m) GT09-C100R41001-6T(10m) GT09-C200R41001-6T(20m) GT09-C300R41001-6T(30m) or User preparing RS-485 connection diagram 1)	500m[*2]	- (Built into GOT)	GT27 GT25 GT23	1 GOT for up to 6 PLCs (RS-232C/485 interface capsules)
				500m	GT15-RS4-9S	GT27 GT25	

*1 Product manufactured by Fuji Electric Co., Ltd. For details of the product, contact Fuji Electric Co., Ltd.
*2 Including the cable length of the option devices.
*3 GT25-W, GT2505-V does not support the option device.

When connecting to multiple PLCs (using general-purpose interface modules)

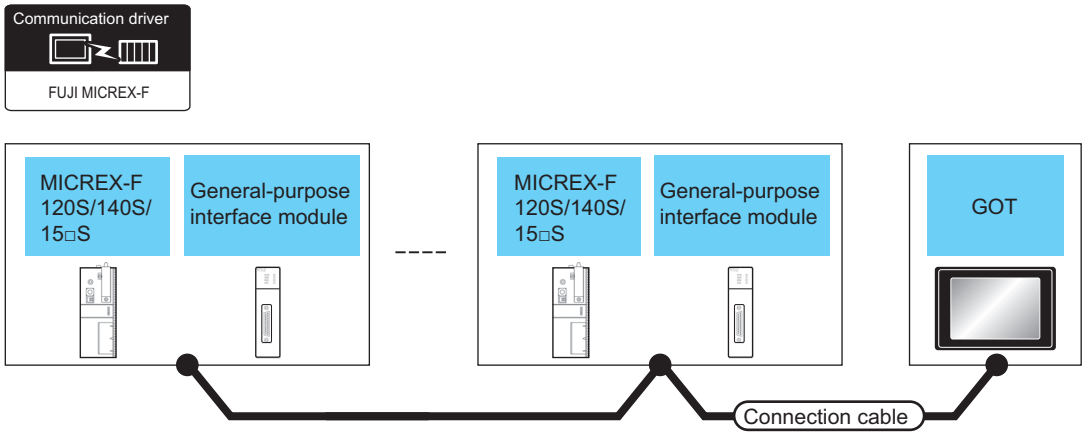

PLC			Connection cable		GOT		Number of connectable equipment
Model name	General-purpose interface module*1	Communication Type	Cable model Connection diagram number	Max. distance	Option device*3	Model	
F120S F140S F15□S	FFU120B	RS-485	GT09-C30R41001-6T(3m) GT09-C100R41001-6T(10m) GT09-C200R41001-6T(20m) GT09-C300R41001-6T(30m) or User preparing RS-485 connection diagram 1)	500m*2	- (Built into GOT)	GT27 GT25 GT23	1 GOT for up to 31 PLCs (general-purpose interface modules)
				500m	GT15-RS4-9S	GT27 GT25	

*1 Product manufactured by Fuji Electric Co., Ltd. For details of the product, contact Fuji Electric Co., Ltd.
*2 Including the cable length of the option devices.
*3 GT25-W, GT2505-V does not support the option device.

Connecting to MICREX-SX SPH

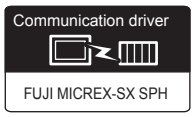

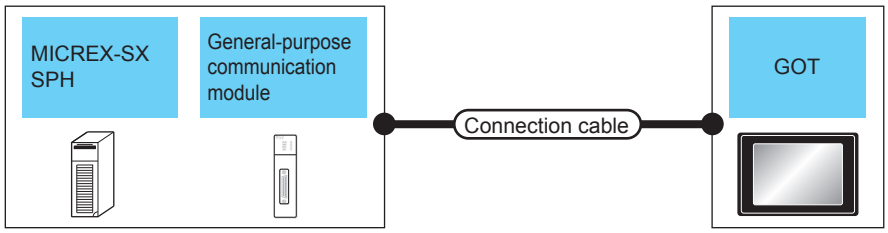

PLC			Connection cable		GOT		Number of connectable equipment
Model name	General-purpose interface module*1	Communication Type	Cable model Connection diagram number	Max. distance	Option device*3*4	Model	
MICREX-SX SPH *5	-	RS-232	NP4H-CB2*1 + NW0H-CNV*1	2m	- (Built into GOT)	GT27 GT25 GT23 GT21(07W) GT21(05Q) GS	1 GOT for 1 PLC
					GT15-RS2-9P	GT27 GT25	
					GT10-C02H-6PT9P*2	GT21(03P 04P R4) GT21(03P 04P R2)	
			NP4H-CB2*1 + NW0H-CNV*1 + User preparing RS-232 connection diagram 3)		- (Built into GOT)	GT21(04R) GT21(03P 04P R2)	
	NP1L-RS1 NP1L-RS2 NP1L-RS3	RS-232	User preparing RS-232 connection diagram 2)	15m	- (Built into GOT)	GT27 GT25 GT23 GT21(07W) GT21(05Q) GS	1 GOT for Communication port of general-purpose communication module
					GT15-RS2-9P	GT27 GT25	
					GT10-C02H-6PT9P*2	GT21(03P 04P R4) GT21(03P 04P R2)	
			User preparing RS-232 connection diagram 4)		- (Built into GOT)	GT21(04R) GT21(03P 04P R2)	

PLC			Connection cable		GOT		Number of connectable equipment
Model name	General-purpose interface module*1	Communication Type	Cable model Connection diagram number	Max. distance	Option device*3*4	Model	
MICREX-SX SPH	NP1L-RS1 NP1L-RS4	RS-485	User preparing RS-485 connection diagram 2)	1000m	- (Built into GOT)	GT27 GT25 GT23 GT2107W GT2105Q GS *6	1 GOT for Communication port of general-purpose communication module
					GT15-RS4-9S	GT27 GT25	
					GT10-C02H-9SC	GT2104R GT2103P GT2104P R4	
			User preparing RS-485 connection diagram 4)		- (Built into GOT)	GT2104R GT2103P GT2104P ET/R4 GT2103P GT2104P R4	
	NP1L-RS5	RS-485	User preparing RS-485 connection diagram 3)	1000m	- (Built into GOT)	GT27 GT25 GT23 GT2107W GT2105Q GS *6	
					GT15-RS4-9S	GT27 GT25	
					GT10-C02H-9SC	GT2104R GT2103P GT2104P R4	
			User preparing RS-485 connection diagram 5)		- (Built into GOT)	GT2104R GT2103P GT2104P ET/R4 GT2103P GT2104P R4	

*1 Product manufactured by Fuji Electric Co., Ltd. For details of the product, contact Fuji Electric Co., Ltd.
*2 When a GT10-C02H-6PT9P unit of the sub version A or B is used, do not ground the case of the D-sub (9-pin) connector.
*3 GT25-W is not compatible to the option devices other than FA-LTBGT2R4CBL□□.
*4 GT2505-V does not support the option device.
*5 Depending on the hardware version of the PLC, the GOT cannot be connected.
The following shows the hardware versions of the PLCs that can be connected.

Model	Type	Hardware version
SPH200	NP1PH-08 NP1PH-16	V21 or earlier
SPH300	NP1PS-32 NP1PS-32R NP1PS-74R NP1PS-117R	V25 or earlier
	NP1PS-245R	V22 or earlier
SPH2000	NP1PM-48R NP1PM-48E NP1PM-256E NP1PM-256H	V24 or earlier
SPH3000	NP1PU-048E NP1PU-128E NP1PU-256E	V21 or earlier

For information on how to check the hardware version, refer to the following.

Manual of FUJI PLC

*6 For GS21-W, use the RS-422 interface for connection.

Connection Diagram

The following diagram shows the connection between the GOT and the PLC.

RS-232 cable

■Connection diagram

• RS-232 connection diagram 1)

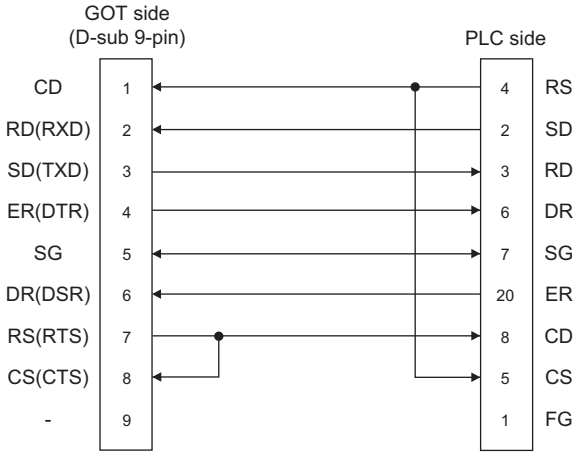

• RS-232 connection diagram 2)

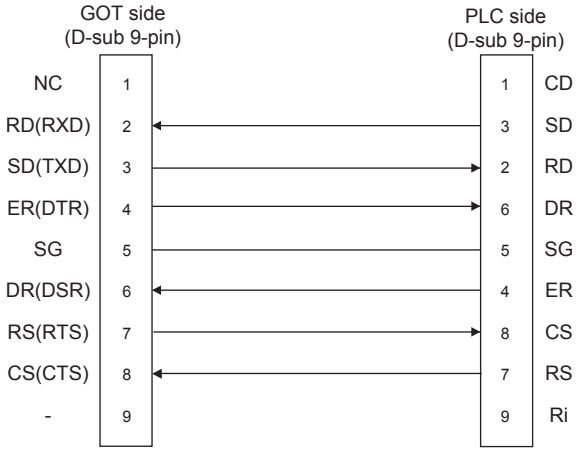

• RS-232 connection diagram 3)

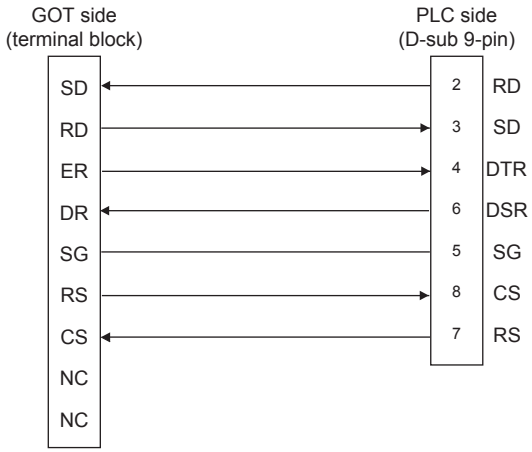

• RS-232 connection diagram 4)

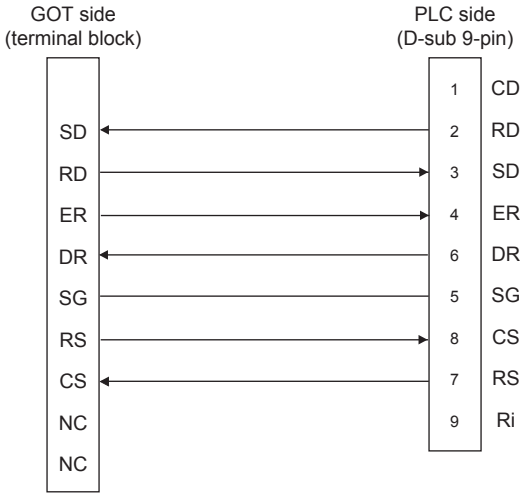

■Precautions when preparing a cable

• Cable length

The length of the RS-232 cable must be 15m or less.

• GOT side connector

For the GOT side connector, refer to the following.

☞ Page 58 GOT connector specifications

• FUJI PLC side connector

Use the connector compatible with the FUJI PLC side module.

For details, refer to the user's FUJI PLC manual.

RS-485 cable

■Connection diagram

• RS-485 connection diagram 1)

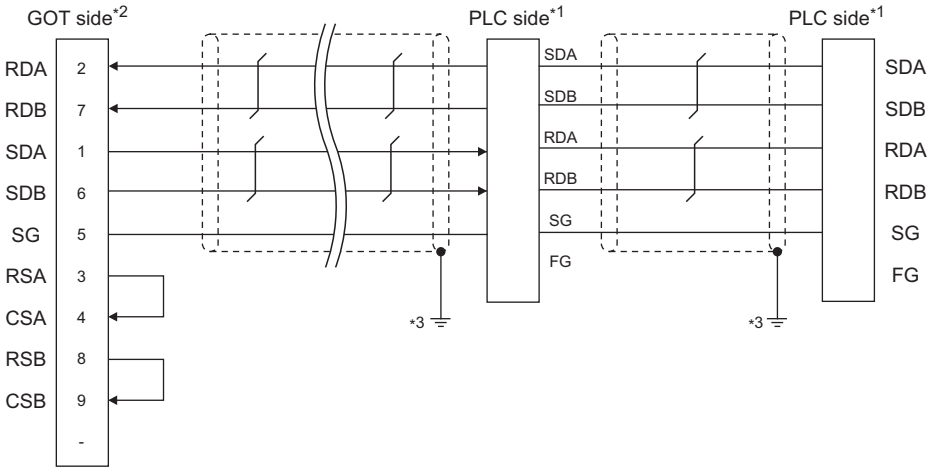

*1 Turn ON the terminating switch of a interface converter which will be a terminal.

*2 Set the terminating resistor of GOT side which will be a terminal.

☞ Page 136 Connecting terminating resistors

*3 Connect FG grounding to the appropriate part of a cable shield line.

• RS-485 connection diagram 2)

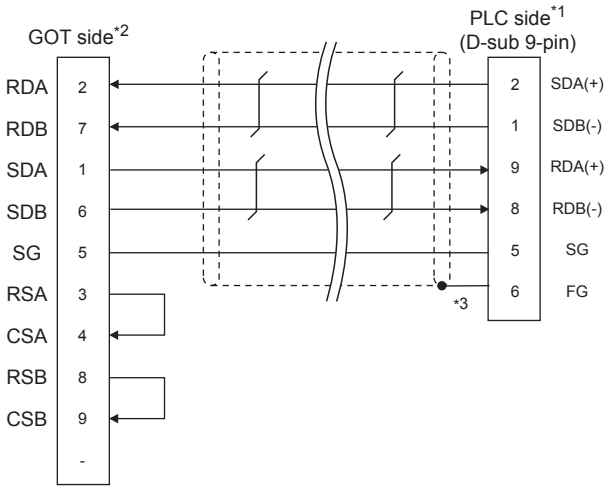

*1 Turn ON the terminating switch of a interface converter which will be a terminal.

*2 Set the terminating resistor of GOT side which will be a terminal.
☞ Page 136 Connecting terminating resistors

*3 Make sure to pull the cable shield line into inside the connector cover, and treat the line end for obtaining shield effect.

• RS-485 connection diagram 3)

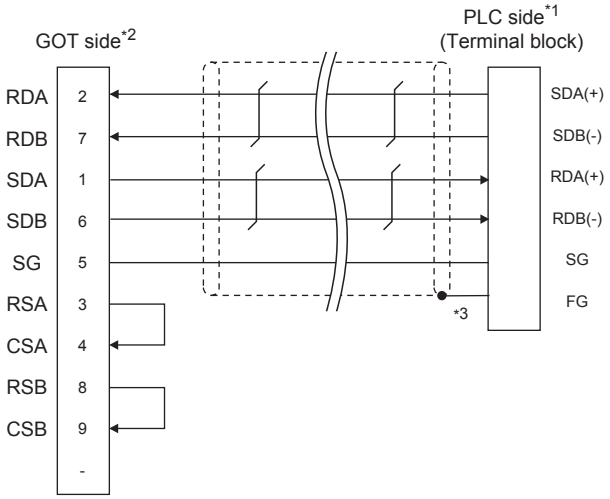

*1 Turn ON the terminating switch of a interface converter which will be a terminal.

*2 Set the terminating resistor of GOT side which will be a terminal.
☞ Page 136 Connecting terminating resistors

*3 Make sure to pull the cable shield line into inside the connector cover, and treat the line end for obtaining shield effect.

• RS-485 connection diagram 4)

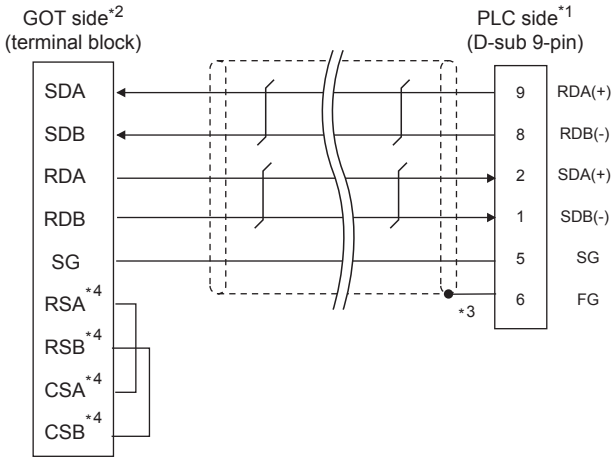

*1 Turn on the RS485 terminating switch of a interface converter which will be a terminal.
*2 Set the terminating resistor of GOT side, which will be a terminal, to "330Ω".
☞ Page 136 Connecting terminating resistors
*3 Make sure to pull the cable shield line into inside the connector cover, and treat the line end for obtaining shield effect.
*4 The signals RSA, RSB, CSA, and CSB are not provided for GT2104-PMBD, GT2103-PMBD. Return connection is not required.

• RS-485 connection diagram 5)

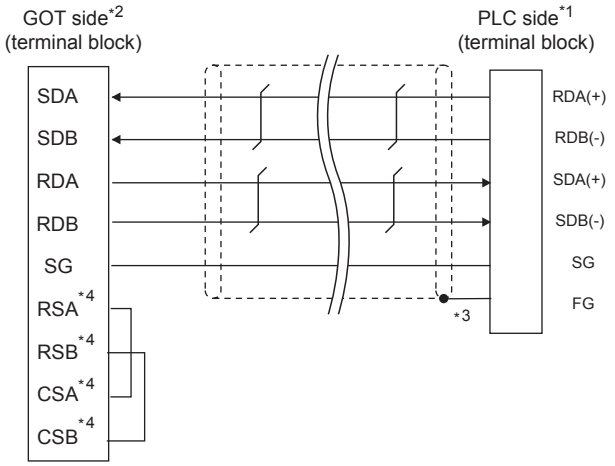

*1 Turn on the RS485 terminating switch of a interface converter which will be a terminal.
*2 Set the terminating resistor of GOT side, which will be a terminal, to "330Ω".
☞ Page 136 Connecting terminating resistors
*3 Make sure to pull the cable shield line into inside the connector cover, and treat the line end for obtaining shield effect.
*4 The signals RSA, RSB, CSA, and CSB are not provided for GT2104-PMBD, GT2103-PMBD. Return connection is not required.

■Precautions when preparing a cable

• Cable length

The length of the RS-485 cable must be within the maximum distance..

• GOT side connector

For the GOT side connector, refer to the following.

☞ Page 58 GOT connector specifications

• FUJI PLC side connector

Use the connector compatible with the FUJI PLC side module.

For details, refer to the user's FUJI PLC manual.

■Connecting terminating resistors

• GOT side

For GT27, GT25(Except GT2505-V), GT23

Set the terminating resistor setting switch of the GOT main unit to enable.

For GT2505-V, GT21, and GS21-W-N

Set the terminating resistor selector to 330 Ω.

For GS21-W

Since the terminating resistor is fixed to 330 Ω, no setting is required for the terminating resistor.

For the procedure to set the terminating resistor, refer to the following.

☞ Page 62 Terminating resistors of GOT

• FUJI PLC side

When connecting a FUJI PLC to the GOT, a terminating resistor must be connected.

☞ Page 140 PLC Side Setting

Setting communication interface (Communication settings)

Set the channel of the connected equipment.

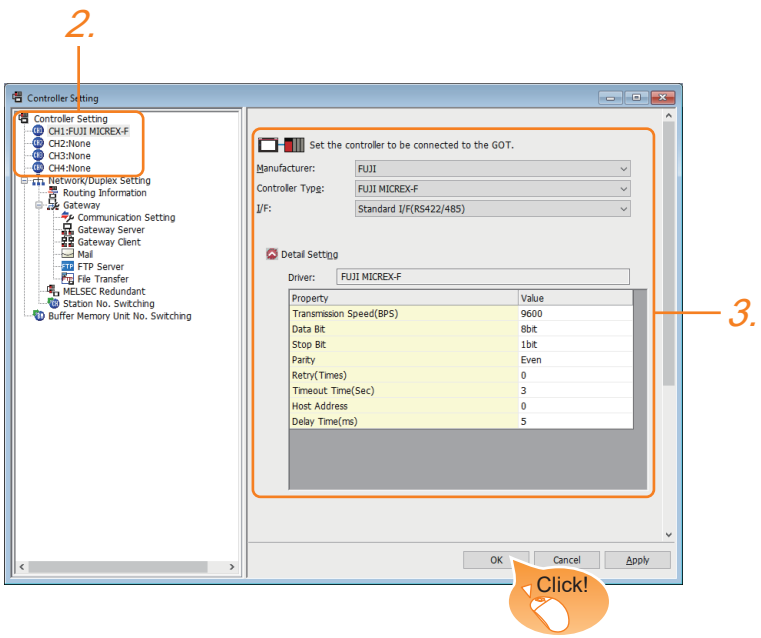

1. Select [Common] → [Controller Setting] from the menu.

2. In the [Controller Setting] window, select the channel No. to be used from the list menu.

3. Set the following items.

- [Manufacturer]: [FUJI]
- [Controller Type]: Select one of the following items.

[FUJI MICREX-F]

[FUJI MICREX-SX SPH]

- [I/F]: Interface to be used
- [Detail Setting]: Configure the settings according to the usage environment.

☞ Page 138 Communication detail settings

4. When you have completed the settings, click the [OK] button.

Point

The settings of connecting equipment can be confirmed in [I/F Communication Setting].
For details, refer to the following.

☞ Page 48 I/F communication setting

Communication detail settings

Make the settings according to the usage environment.

(For FUJI MICREX-F)

Property	Value
Transmission Speed(BPS)	9600
Data Bit	8 bit
Stop Bit	1 bit
Parity	Even
Retry(Times)	0
Timeout Time(Sec)	3
Host Address	0
Delay Time(ms)	5

Item	Description	Range
Transmission Speed	Set this item when change the transmission speed used for communication with the connected equipment. (Default: 9600bps)	9600bps, 19200bps, 38400bps, 57600bps, 115200bps
Data Bit	Set this item when change the data length used for communication with the connected equipment. (Default: 8bits)	7bits/8bits
Stop Bit	Specify the stop bit length for communications. (Default: 1bit)	1bit/2bits
Parity	Specify whether or not to perform a parity check, and how it is performed during communication. (Default: Even)	None Even Odd
Retry	Set the number of retries to be performed when a communication error occurs. (Default: 0time)	0 to 5times
Timeout Time	Set the time period for a communication to time out. (Default: 3sec)	1 to 30sec
Host Address	Specify the host address (station No. of the GOT to which the PLC is connected) in the connected network. (Default: 0)	0 to 99
Delay Time	Set this item to adjust the transmission timing of the communication request from the GOT. (Default: 5ms)	0 to 300ms

(For FUJI MICREX-SX SPH)

Property	Value
Transmission Speed(BPS)	38400
Data Bit	8bit
Stop Bit	1bit
Parity	Even
Retry(Times)	3
Timeout Time(Sec)	3
Delay Time(ms)	0

Item	Description	Range
Transmission Speed*1	Set this item when change the transmission speed used for communication with the connected equipment. (Default: 38400bps)	9600bps, 19200bps, 38400bps, 57600bps, 115200bps
Data Bit*1	Set this item when change the data length used for communication with the connected equipment. (Default: 8bits)	7bits/8bits
Stop Bit*1	Specify the stop bit length for communications. (Default: 1bit)	1bit/2bits
Parity*1	Specify whether or not to perform a parity check, and how it is performed during communication. (Default: Even)	None Even Odd
Retry	Set the number of retries to be performed when a communication error occurs. (Default: 3time)	0 to 5times
Timeout Time	Set the time period for a communication to time out. (Default: 3sec)	1 to 30sec
Delay Time	Set this item to adjust the transmission timing of the communication request from the GOT. (Default: 0ms)	0 to 300ms

*1 Leave the setting as default. If the set value is changed, communication with the PLC is disabled.

Point

• Host address

When connecting to PLC by RS-232 communication, set the Host Address to "0".

• Communication interface setting by the Utility

The communication interface setting can be changed on the Utility's [Communication Settings] after writing [Communication Settings] of project data.

For details on the Utility, refer to the following manual.

GOT2000 Series User's Manual (Utility)

• Precedence in communication settings

When settings are made by GT Designer3 or the Utility, the latest setting is effective.

PLC Side Setting

Point

FUJI PLC

For details of FUJI PLCs, refer to the following manuals.

📖FUJI PLC user's Manual

Model name		Refer to
RS-232C interface card	NV1L-RS2	☞ Page 140 Connecting to NV1L-RS2, NC1L-RS2
General-purpose interface module	NC1L-RS2	
	NC1L-RS4	☞ Page 141 Connecting to NC1L-RS4
	FFU120B	☞ Page 143 Connecting to FFU120B
RS-232C/485 interface capsule	FFK120A-C10	☞ Page 145 Connecting to FFK120A-C10

Connecting to NV1L-RS2, NC1L-RS2

■Communication settings

Make the communication settings using setting switches.

Item	Set value
MODE	Command-setting-type start-stop synchronization, nonsequence format
Transmission speed*1	9600bps, 19200bps
Data bit*1	8bits or 7bits
Parity bit*1	Even or Odd
	Done, None
Stop bit*1	1bit, 2bits
Initializing method	By switch

*1 Adjust the settings with GOT settings.

■Settings by switch

Make the communication settings using each setting switch.

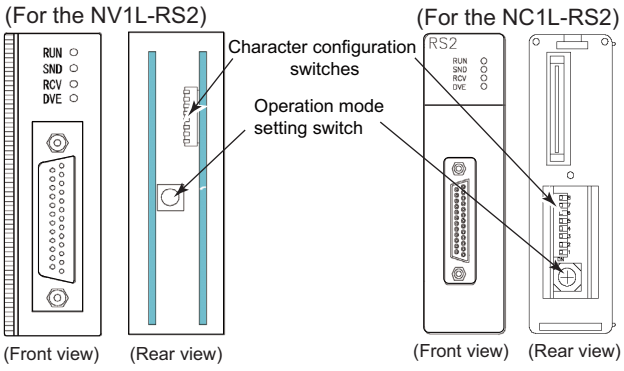

• Setting of the MODE

Make the MODE settings using the MODE switch.

MODE	Switch position	
	NV1L-RS2	NC1L-RS2
Command-setting-type start-stop synchronization, nonsequence format	1	1

• Setting of Transmission speed, Stop bit, Data bit, Parity bit, Initializing method

For the NV1L-RS2

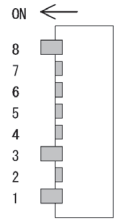

For the NC1L-RS2

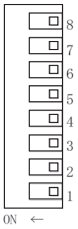

Setting item	Set value	Switch No.							
		1	2	3	4	5	6	7	8
Transmission speed	9600bps	ON	OFF	ON					
	19200bps	OFF	ON	ON					
Stop bit	1bit				ON				
	2bits				OFF				
Data bit	7bits					ON			
	8bits					OFF			
Parity bit	Even						ON		
	Odd						OFF		
	Done							ON	
	None							OFF	
Initializing method	By switch								ON

Connecting to NC1L-RS4

■Communication settings

Make the communication settings using setting switches.

Item	Set value
MODE	Command-setting-type start-stop synchronization, nonsequence format
Transmission speed*1	9600bps, 19200bps
Data bit*1	8bits or 7bits
Parity bit*1	Even or Odd
	Done, None
Stop bit*1	1bit, 2bits
Initializing method	By switch
Station No.*1*2	0 to 99
Terminating resistor*3	ON or OFF

*1 Adjust the settings with GOT settings.
*2 Avoid duplication of the station No. with any of the other units.
*3 Turn ON the terminating switch of a general-purpose interface module which will be a terminal.

■Settings by switch

Make the communication settings using each setting switch.

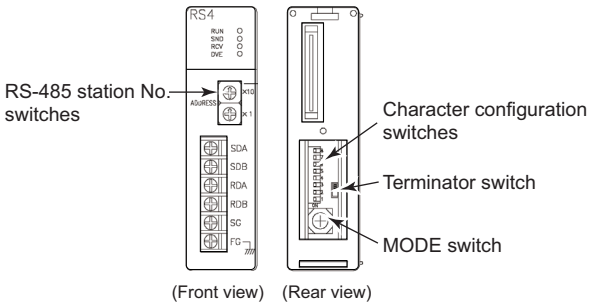

• Setting of the MODE

Make the MODE settings using the MODE switch.

MODE	Switch position
Command-setting-type start-stop synchronization, nonsequence format	3

• Setting of the station No.

Make the station No. using RS-485 station No. switches.

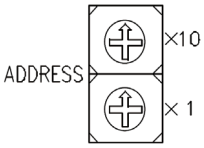

Station No.
0 to 99

• Connecting terminating resistors

Turn ON/OFF the terminating resistor using RS-485 terminating resistor ON/OFF switch.

• Setting of Transmission speed, Stop bit, Data bit, Parity bit, Initializing method

Make the settings using the character configuration switches.

Setting item	Set value	Switch No.							
		1	2	3	4	5	6	7	8
Transmission speed	9600bps	ON	OFF	ON					
	19200bps	OFF	ON	ON					
Stop bit	1bit				ON				
	2bits				OFF				
Data bit	7bits					ON			
	8bits					OFF			
Parity bit	Even						ON		
	Odd						OFF		
	Done							ON	
	None							OFF	
Initializing method	By switch								ON

Connecting to FFU120B

■Communication settings

Make the communication settings using setting switches.

Item	Set value
MODE	Command-setting-type start-stop synchronization, nonsequence format
Transmission speed*1	9600bps, 19200bps
Data bit*1	8bits or 7bits
Parity bit*1	Even or Odd
	Done, None
Stop bit*1	1bit, 2bits
Initializing method	By switch
Station No.*1*2	0 to 99
Terminating resistor*3	ON or OFF

*1 Adjust the settings with GOT settings.

*2 Avoid duplication of the station No. with any of the other units.

*3 Turn ON the terminating switch of a general-purpose interface module which will be a terminal.

■Settings by switch

Make the communication settings using each setting switch.

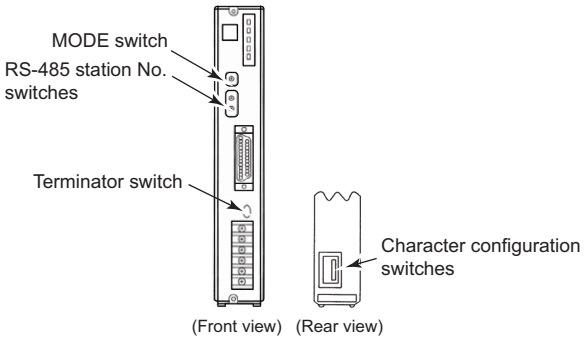

• Setting of the MODE

Make the MODE settings using the MODE switch.

MODE	Switch position
Command-setting-type start-stop synchronization, nonsequence format RS-232C 1:1	1
Command-setting-type start-stop synchronization, nonsequence format RS-232C 1:1, and RS-485 1:N	2
Command-setting-type start-stop synchronization, nonsequence format RS-485 1:N	3

• Setting of the station No.

Make the station No. using RS-485 station No. switches.

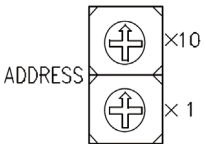

Station No.
0 to 99

• Connecting terminating resistors

Turn ON/OFF the terminating resistor using RS-485 terminating resistor ON/OFF switch.

• Setting of Transmission speed, Stop bit, Data bit, Parity bit, Initializing method

Make the settings using the character configuration switches.

Setting item	Set value	Switch No.							
		1	2	3	4	5	6	7	8
Transmission speed	9600bps	ON	OFF	ON					
	19200bps	OFF	ON	ON					
Stop bit	1bit				ON				
	2bits				OFF				
Data bit	7bits					ON			
	8bits					OFF			
Parity bit	Even						ON		
	Odd						OFF		
	Done							ON	
	None							OFF	
Initializing method	By switch								ON

Connecting to FFK120A-C10

■Communication settings

Make the communication settings using setting switches.

Item	Set value
MODE*4	Command-setting-type start-stop synchronization, nonsequence format RS-232C 1:1
	Command-setting-type start-stop synchronization, nonsequence format RS-232C 1:1, and RS-485 1:N
	Command-setting-type start-stop synchronization, nonsequence format RS-485 1:N
Transmission speed*1	9600bps, 19200bps
Data bit*1	8bits or 7bits
Parity bit*1	Even or Odd
	Done, None
Stop bit*1	1bit, 2bits
Initializing method	By switch
Station No.*1*2	0 to 99
Terminating resistor*3	ON or OFF
T-link channel switch	FUJI PLC user's Manual
T-link terminating resistor	

*1 Adjust the settings with GOT settings.

*2 Avoid duplication of the station No. with any of the other units.

*3 Turn ON the terminating switch of a general-purpose interface module which will be a terminal.

*4 Set as necessary.

■Settings by switch

Make the communication settings using each setting switch.

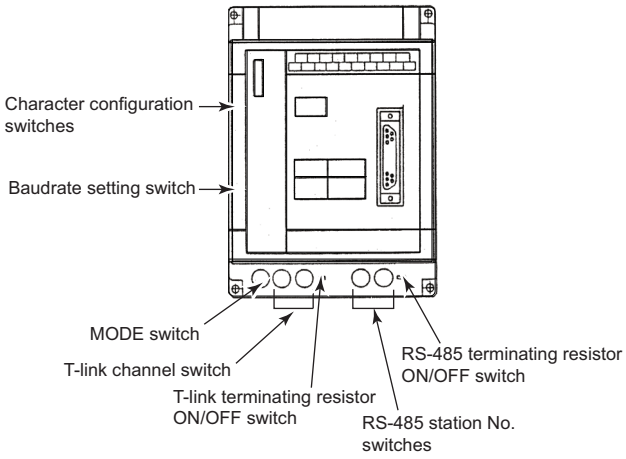

- Setting of the MODE

Make the MODE settings using the MODE switch.

MODE	Switch position
Command-setting-type start-stop synchronization, nonsequence format RS-232C 1:1	1
Command-setting-type start-stop synchronization, nonsequence format RS-232C 1:1, and RS-485 1:N	2
Command-setting-type start-stop synchronization, nonsequence format RS-485 1:N	3

- Setting of the station No.

Make the station No. using RS-485 station No. switches.

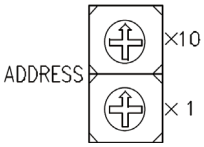

Station No.
0 to 99

- Connecting terminating resistors

Turn ON/OFF the terminating resistor using RS-485 terminating resistor ON/OFF switch.

• Setting of Stop bit, Data bit, Parity bit, Initializing method

Make the settings using the character configuration switches.

Setting item	Set value	Switch No.							
		1	2	3	4	5	6	7	8
disable		OFF	OFF	OFF					
Stop bit	1bit				ON				
	2bits				OFF				
Data bit	7bits					ON			
	8bits					OFF			
Parity bit	Even						ON		
	Odd						OFF		
	Done							ON	
	None							OFF	
Initializing method	By switch								ON

• Transmission speed settings

Make the settings using the baudrate setting switches.

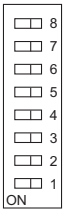

Setting item	Set value	Switch No.							
		1	2	3	4	5	6	7	8
Transmission speed	9600bps	OFF	OFF	OFF	OFF	OFF	ON	OFF	OFF
	19200bps	OFF	OFF	OFF	OFF	OFF	OFF	ON	OFF

Connecting to NP1L-RS1, NP1L-RS2, NP1L-RS3, NP1L-RS4, NP1L-RS5

■Communication settings

Make the communication settings using setting switches.

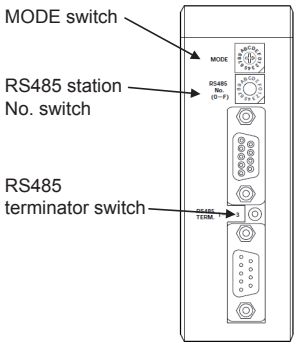

Switch	Item	Set value
MODE switch	MODE	1 to 3*1
RS485 station No. switch	Station No.	*2
RS485 terminator switch	Terminator	*3

*1 Set the MODE switch so that the communication port of the general communication module to be connected to the GOT operates as a loader.

*2 The switch is not used for connection with the GOT.

*3 Turn ON the terminating switch of the general communication module which will be a terminal.

Station number setting

Set each station number so that no station number overlaps.

The station number can be set without regard to the cable connection order. There is no problem even if station numbers are not consecutive.

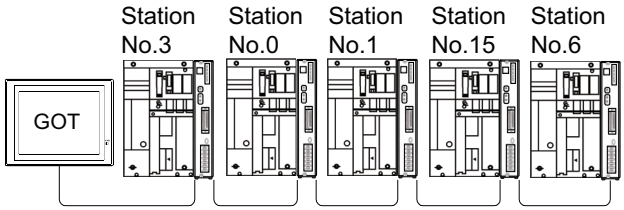

Examples of station number setting

Direct specification

Specify the station No. of the PLC to be changed when setting device.

Specification range
0 to 99

4.3 Ethernet Connection

Connecting to MICREX-SX SPH

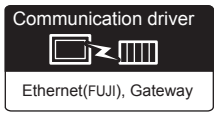

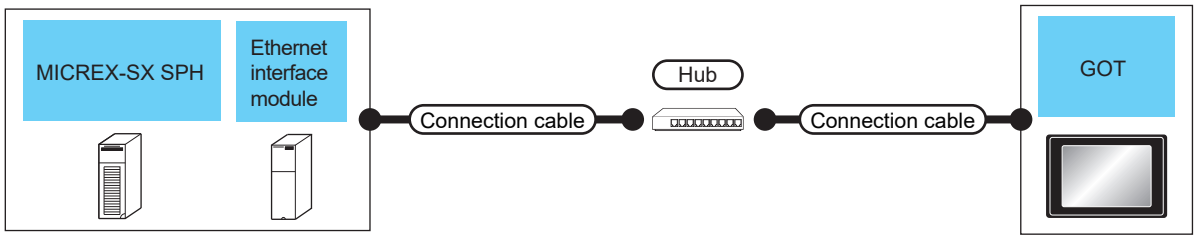

PLC		Connection cable		GOT		Number of connectable equipment
Model name	Ethernet interface module*3	Cable model*1 Connection diagram number	Max. distance*2	Option device*4	Model	
SPH200 SPH300 SPH2000 SPH3000	NP1L-ET1	• 10BASE-T Shielded twisted pair cable (STP) or unshielded twisted pair cable (UTP): Category 3, 4, and 5 • 100BASE-TX Shielded twisted pair cable (STP): Category 5 and 5e	100m	- (Built into GOT)	GT27 GT25 GT23 GT21 GT21 GT21 GS	When PLC: GOT is 1: N 128 GOTs or less for 1 PLC When PLC: GOT is 1: N 8 GOTs or less for 1 PLC
				GT25-J71E71-100	GT27 GT25	
SPH2000 SPH3000	-		100m	- (Built into GOT)	GT27 GT25 GT23 GT21 GT21 GT21 GS	When PLC: GOT is 1: N 128 GOTs or less for 1 PLC When PLC: GOT is 1: N 10 GOTs or less for 1 PLC
				GT25-J71E71-100	GT27 GT25	

*1 The destination connected with the twisted pair cable varies with the configuration of the applicable Ethernet network system.
Connect to the Ethernet module, hub, transceiver or other system equipment corresponding to the applicable Ethernet network system.
Use cables, connectors, and hubs that meet the IEEE802.3 10BASE-T/100BASE-TX standards.
To connect the target device and hub, use a cable according to the target device configuration.

*2 A length between a hub and a node.
The maximum distance differs depending on the Ethernet device to be used.
The following shows the number of the connectable nodes when a repeater hub is used.
• 10BASE-T: Max. 4 nodes for a cascade connection (500m)
• 100BASE-TX: Max. 2 nodes for a cascade connection (205m)
When switching hubs are used, the cascade connection between the switching hubs has no logical limit for the number of cascades.
For the limit, contact the switching hub manufacturer.

*3 Product manufactured by Fuji Electric Co., Ltd. For details of the product, contact Fuji Electric Co., Ltd.

*4 GT25-W, GT2505-V does not support the option device.

GOT Side Settings

Setting communication interface (Communication settings)

Set the channel of the connected equipment.

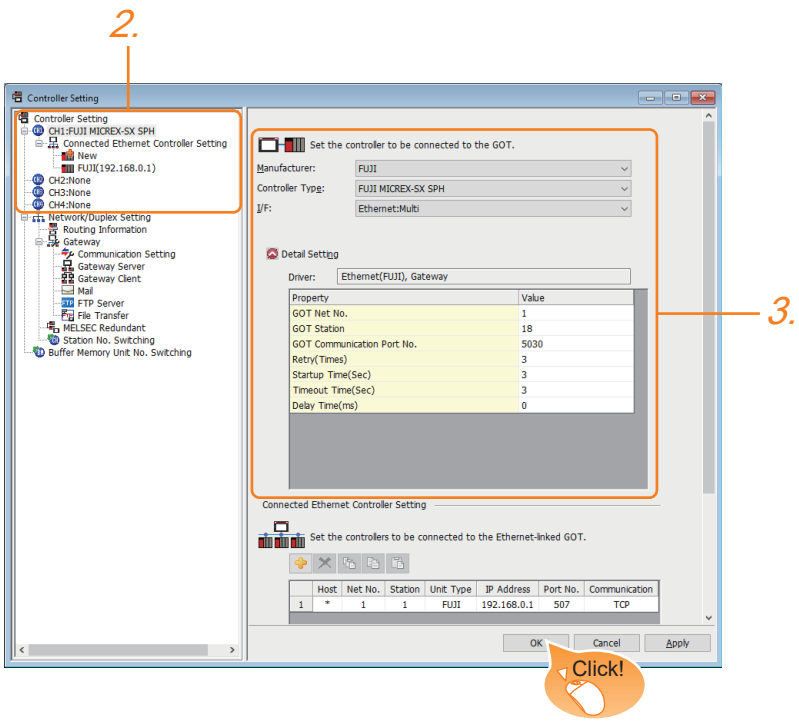

1. Select [Common] → [Controller Setting] from the menu.
2. In the [Controller Setting] window, select the channel No. to be used from the list menu.
3. Set the following items.

- [Manufacturer]: [FUJI]
- [Controller Type]: [FUJI MICREX-SX SPH]
- [I/F]: [Ethernet:Multi]
- [Detail Setting]: Configure the settings according to the usage environment.

☞ Page 151 Communication detail settings

4. When you have completed the settings, click the [OK] button.

Point

The settings of connecting equipment can be confirmed in [I/F Communication Setting].
For details, refer to the following.
☞ Page 48 I/F communication setting

Communication detail settings

Make the settings according to the usage environment.

Property	Value
GOT Net No.	1
GOT Station	18
GOT Communication Port No.	5030
Retry(Times)	3
Startup Time(Sec)	3
Timeout Time(Sec)	3
Delay Time(ms)	0

Item	Description	Range
GOT Net No.	Set the network No. of the GOT. (Default: 1)	1 to 239
GOT Station*1	Set the station No. of the GOT. (Default: 18)	1 to 254
GOT Communication Port No.	Set the GOT port No. for the connection with the Ethernet equipment. (Default: 5030*2)	1024 to 5010, 5014 to 49152, 49171 to 65534
Retry	Set the number of retries to be performed when a communication timeout occurs. When receiving no response after retries, the communication times out. (Default: 3times)	0 to 5times
Startup Time	Specify the time period from the GOT startup until GOT starts the communication with the PLC CPU. (Default: 3sec)	3 to 255sec
Timeout Time	Set the time period for a communication to time out. (Default: 3sec)	1 to 90sec
Delay Time	Set the delay time for reducing the load of the network/destination PLC. (Default: 0ms)	0 to 10000(ms)

*1 Set different values for [GOT Station] of [Detail Setting] and [Station] of [Connected Ethernet Controller Setting].
☞ Page 152 Connected Ethernet Controller Setting

*2 When assigning the same driver to the multiple channels, in the communication drivers set as the second and following, the default value of [GOT Communication Port No.] becomes the earliest number in the vacant numbers of No. 6000 and later.

Point

• Communication interface setting by the Utility

The communication interface setting can be changed on the Utility's [Communication setting] after writing [Communication Settings] of project data.

For details on the Utility, refer to the following manual.

GOT2000 Series User's Manual (Utility)

• Precedence in communication settings

When settings are made by GT Designer3 or the Utility, the latest setting is effective.

GOT Ethernet Setting

The GOT can be connected to a different network by configuring the following setting.

■GOT IP address setting

Set the following communication port setting.

- Standard port (When using GT25-W, port 1)
- Extension port (When using GT25-W, port 2)

■GOT Ethernet common setting

Set the following setting which is common to the standard port and the extension port, or port 1 and port 2.

- [Default Gateway]
- [Peripheral S/W Communication Port No.]
- [Transparent Port No.]

■IP filter setting

By configuring the IP filter setting, the access from the specific IP address can be permitted or shut off.

For the detailed settings, refer to the following manual.

☞ Page 44 GOT Ethernet Setting

Connected Ethernet Controller Setting

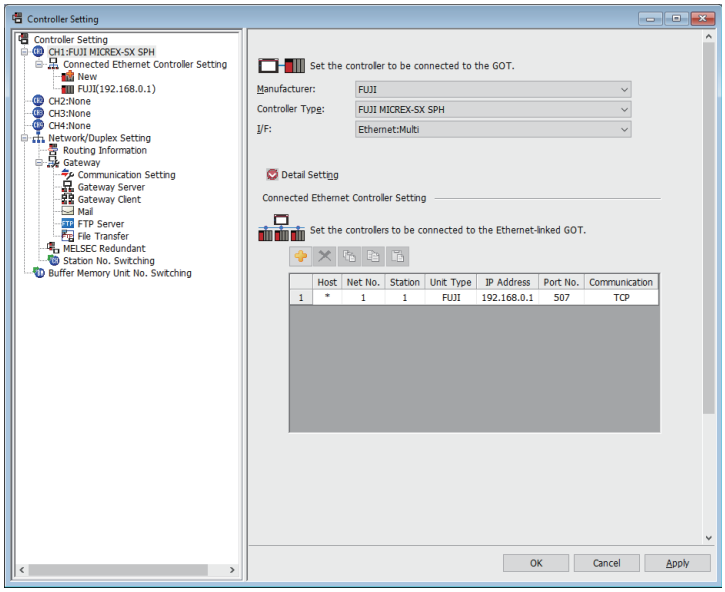

Item	Description	Set value
Host	The host is displayed. It refers to a station that can be connected without setting a station number. (The host is indicated with an asterisk (*).)	—
Net No.	Set the network No. of the connected Ethernet equipment. (Default: 1)	1 to 239
Station *2	Set the station No. of the connected Ethernet equipment. (Default: 1)	1 to 254
Unit Type	FUJI (fixed)	FUJI (fixed)
IP address *1	Set the IP address of the connected Ethernet equipment. (Default: 192.168.0.1)	PLC side IP address
Port No.	Set the port No. of the connected Ethernet equipment. (Default: 507)	251 to 65531
Communication format	TCP (fixed)	TCP (fixed)

*1 Connection with the PLC is unavailable if the IP address is the default value. Set the value to the IP address of the PLC to be connected.

*2 Set different values for [GOT Station] of [Detail Setting] and [Station] of [Connected Ethernet Controller Setting].

☞ Page 151 Communication detail settings

PLC side setting (MICREX-SX SPH)

Point

FUJI PLC

For details of FUJI PLCs, refer to the following manuals.

FUJI PLC user's Manual

Setting the IP address and self port reference No.

Set the IP address and self port reference No. using a peripheral tool of the PLC.

Item	Set value	Range
IP Address*1	[ ].[ ].[ ].[ ]	PLC side IP address
Subnet Mask	[ ].[ ].[ ].[ ]	PLC side setting
Default Gateway IP Address	[ ].[ ].[ ].[ ]	
Self port reference No.*2	0 to 65280	

*1 Adjust the settings with GOT settings.

Page 152 Connected Ethernet Controller Setting

*2 Make sure that "Self port reference No. + 251" is equivalent to the port No. in the GOT.

Page 152 Connected Ethernet Controller Setting

4.4 Settable Device Range

For the device setting dialog and range of devices usable in the GOT, refer to the following.

☞ Page 570 FUJI equipment ([FUJI MICREX-F])
☞ Page 576 FUJI equipment ([FUJI MICREX-SX SPH])

4.5 Precautions

Station No. settings of the PLC side

In the system configuration, the PLC with the station number set with the host address must be included.

For details of host address setting, refer to the following.

☞ Page 138 Communication detail settings

System configuration of the PLC side

GOT can communicate in a system configuration where NC1L-PS4, FFU120B and FFK120A-C10 are mixed.

When using FFK120A-C10, the number of PLCs that can communicate is at most 6 units.

GOT clock control

The GOT clock function is available only for the PLC with the station number set with the host address.

For details of host address setting, refer to the following.

☞ Page 138 Communication detail settings

5 FUJI TEMPERATURE CONTROLLER

- Page 155 Connectable Model List
- Page 156 System Configuration
- Page 167 Connection Diagram
- Page 175 GOT Side Settings
- Page 177 Temperature Controller Side Setting
- Page 186 Settable Device Range
- Page 186 Precautions

5.1 Connectable Model List

The following table shows the connectable models.

Series	Model name	Clock	Communication Type	Connectable model	Refer to
Temperature controller	PXR3	×	RS-232 RS-485	GT27 GT25 GT23 GT21 GS *1	☞ Page 156 Connecting to PXR3, PXR4, PXR5 or PXR9
	PXR4				
	PXR5				
	PXR9				
	PXG4	×	RS-232 RS-485	GT27 GT25 GT23 GT21 GS *1	☞ Page 159 Connecting to PXG4, PXG5, PXG9 or PXH9
	PXG5				
	PXG9				
	PXF4	×	RS-232 RS-485	GT27 GT25 GT23 GT21 GS *1	☞ Page 162 Connecting to PXF4, PXF5 or PXF9
	PXF5				
	PXF9				
Digital indication controller	PXH9	×	RS-232 RS-485	GT27 GT25 GT23 GT21 GS *1	☞ Page 159 Connecting to PXG4, PXG5, PXG9 or PXH9
Multi-loop/module type temperature controller	PUMA	×	RS-232 RS-485	GT27 GT25 GT23 GT21 GS *1	☞ Page 164 Connecting to PUMA or PUMB
	PUMB	×			

*1 For GS21, only GS21-W-N supports the RS-485 connection.

5.2 System Configuration

Connecting to PXR3, PXR4, PXR5 or PXR9

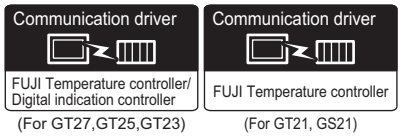

When connecting via the RS-232 communication

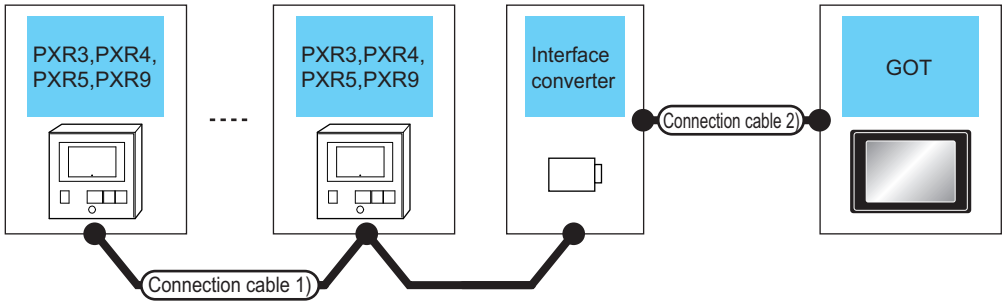

Temperature controller	Connection cable 1)		Interface converter		Connection cable 2)		GOT		Number of connectable equipment
Model name	Cable model Connection diagram number	Max. distance	Model name	Communication Type	Cable model Connection diagram number	Max. distance	Option device*4	Model	
PXR3 PXR4 PXR5 PXR9	User preparing Page 170 RS-485 connection diagram 1)	500m	RC-77*1	RS-232	User preparing Page 167 RS-232 connection diagram 1)	15m	- (Built into GOT)	GT27 GT25 GT23 GT21(07W) GT21(05Q) GS	Up to 31 temperature controllers for 1 GOT
							GT15-RS2-9P	GT27 GT25	
							GT10-C02H-6PT9P*5	GT21(03P04P R4) GT21(03P04P R2)	
					User preparing Page 168 RS-232 connection diagram 4)	15m	- (Built into GOT)	GT21(04R) GT21(03P04P R2)	

Temperature controller	Connection cable 1)		Interface converter		Connection cable 2)		GOT		Number of connectable equipment
Model name	Cable model Connection diagram number	Max. distance	Model name	Communication Type	Cable model Connection diagram number	Max. distance	Option device*4	Model	
PXR3 PXR4 PXR5 PXR9	User preparing Page 170 RS-485 connection diagram 2)	500m	SI-30A*2	RS-232	User preparing Page 167 RS-232 connection diagram 2)	15m	- (Built into GOT)	GT27 GT25 GT23 GT21(07W) GT21(05Q) GS	Up to 31 temperature controllers for 1 GOT
							GT15-RS2-9P	GT27 GT25	
							GT10-C02H-6PT9P*5	GT21(03P,04P R4) GT21(03P,04P R2)	
					User preparing Page 168 RS-232 connection diagram 5)	15m	- (Built into GOT)	GT21(04R) GT21(03P,04P R2)	
	User preparing Page 171 RS-485 connection diagram 3)	500m	KS-485*3	RS-232	User preparing Page 167 RS-232 connection diagram 2)	15m	- (Built into GOT)	GT27 GT25 GT23 GT21(07W) GT21(05Q) GS	
							GT15-RS2-9P	GT27 GT25	
							GT10-C02H-6PT9P*5	GT21(03P,04P R4) GT21(03P,04P R2)	
					User preparing Page 168 RS-232 connection diagram 5)	15m	- (Built into GOT)	GT21(04R) GT21(03P,04P R2)	

*1 Product manufactured by SYSMEXRA CO., LTD. For details of the product, contact SYSMEXRA CO., LTD.
*2 Product manufactured by LINEEYE CO., LTD. For details of the product, contact LINEEYE CO., LTD.
*3 Product manufactured by System Sacom corp. For details of the product, contact System Sacom corp.
*4 GT25-W, GT2505-V does not support the option device.
*5 When a GT10-C02H-6PT9P unit of the sub version A or B is used, do not ground the case of the D-sub (9-pin) connector.

When connecting via RS-485 communication

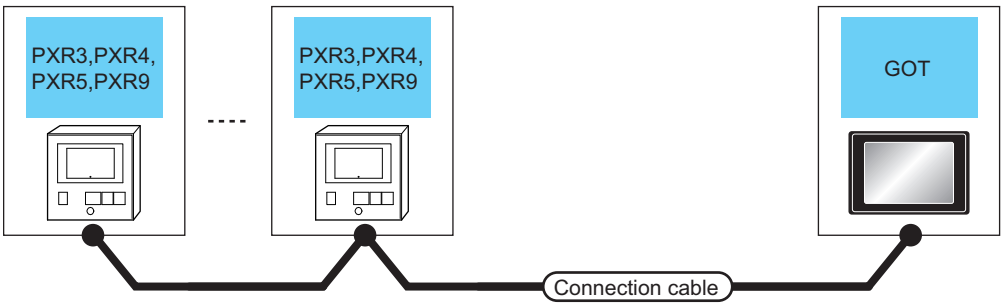

Temperature controller		Connection cable		GOT		Number of connectable equipment
Model name	Communication Type	Cable model Connection diagram number	Max. distance	Option device	Model	
PXR3 PXR4 PXR5 PXR9	RS-485	User preparing Page 171 RS-485 connection diagram 4)	500m*1	FA-LTBGT2R4CBL05(0.5m)*2 FA-LTBGT2R4CBL10(1m)*2 FA-LTBGT2R4CBL20(2m)*2	GT27 GT25 GT23 *4	Up to 31 temperature controllers for 1 GOT
		User preparing Page 172 RS-485 connection diagram 5)	500m	GT15-RS4-TE	GT27 GT25 *3*4	
		User preparing Page 174 RS-485 connection diagram 9)	500m	GT14-RS2T4-9P *5	GT25 *6	
		User preparing Page 173 RS-485 connection diagram 7)	500m	- (Built into GOT)	GT27 GT25 GT23 GT2107W GT2105Q GS *7	
		User preparing Page 173 RS-485 connection diagram 8)	500m	- (Built into GOT)	GT2104R GT03P 2104P ET/R4 GT03P 2104P R4	

*1 Including the cable length of the option devices.
*2 Product manufactured by MITSUBISHI ELECTRIC ENGINEERING COMPANY LIMITED. For details of the product, contact MITSUBISHI ELECTRIC ENGINEERING COMPANY LIMITED.
*3 Not available to GT25-W.
*4 Not available to GT2505-V.
*5 Connect it to the RS-232 interface (built in the GOT).
*6 Only available to GT2505-V.
*7 Only available to GS21-W-N for GS21.

Connecting to PXG4, PXG5, PXG9 or PXH9

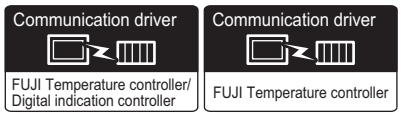

(For GT27,GT25,GT23) (For GT21, GS21)

When connecting to one Temperature controller/Digital indication controller

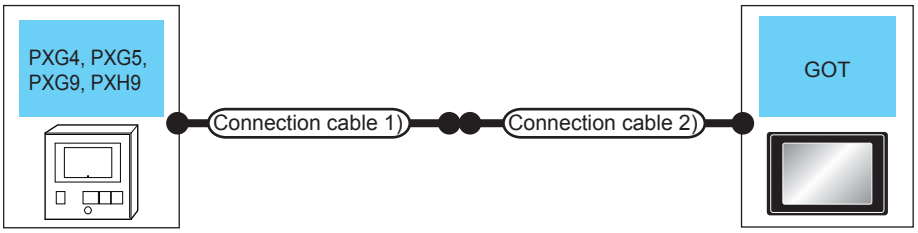

Temperature controller/Digital indication controller		Connection cable 1)	Connection cable 2)	Total distance *4	GOT		Number of connectable equipment
Model name	Communication Type	Cable model	Connection diagram number		Option device*2	Model	
PXG4 PXG5 PXG9 PXH9	RS-232	ZZPPXH1*TK4H4563*1	-	3m	GT15-RS2-9P	GT27 GT25 GT23 GT21(07W) GT21(050) GS	Up to 31 Temperature controllers/ Digital indication controllers for 1 GOT
					GT15-RS2-9P	GT27 GT25	
					GT10-C02H-6PT9P*3	GT21(03P04P R4) GT21(03P04P R2)	
			User preparing Page 169 RS-232 connection diagram 7)	15m	- (Built into GOT)	GT21(04R) GT21(03P04P R2)	

*1 Product manufactured by FUJI CO., LTD. For details of the product, contact FUJI CO., LTD.
*2 GT25-W, GT2505-V does not support the option device.
*3 When a GT10-C02H-6PT9P unit of the sub version A or B is used, do not ground the case of the D-sub (9-pin) connector.
*4 Distance from the GOT to temperature controller (connection cable 1 + connection cable 2)

When connecting to multiple Temperature controllers/Digital indication controllers (RS-232 communication)

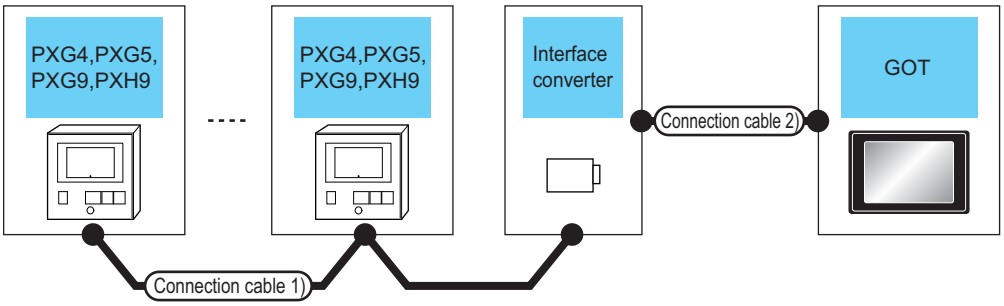

Temperature controller/ Digital indication controller	Connection cable 1)		Interface converter		Connection cable 2)		GOT		Number of connectable equipment
Model name	Cable model Connection diagram number	Max. distance	Model name	Communication Type	Cable model Connection diagram number	Max. distance	Option device*3	Model	
PXG4 PXG5 PXG9 PXH9	User preparing Page 170 RS-485 connection diagram 1)	500m	RC-77*1	RS-232	User preparing Page 167 RS-232 connection diagram 1)	15m	- (Built into GOT)	GT27 GT25 GT23 GT21(07W) GT21(05C) GS	Up to 31 Temperature controllers/ Digital indication controllers for 1 GOT
							GT15-RS2-9P	GT27 GT25	
							GT10-C02H-6PT9P*4	GT21(03P)(04P)R4 GT21(03P)(04P)R2	
					User preparing Page 168 RS-232 connection diagram 4)	15m	- (Built into GOT)	GT21(04R) GT21(03P)(04P)R2	
	User preparing Page 172 RS-485 connection diagram 6)	500m	K3SC-10*2	RS-232	User preparing Page 168 RS-232 connection diagram 3)	15m	- (Built into GOT)	GT27 GT25 GT23 GT21(07W) GT21(05C) GS	
							GT15-RS2-9P	GT27 GT25	
							GT10-C02H-6PT9P*4	GT21(03P)(04P)R4 GT21(03P)(04P)R2	
					User preparing Page 169 RS-232 connection diagram 6)	15m	- (Built into GOT)	GT21(04R) GT21(03P)(04P)R2	

*1 Product manufactured by SYSMEXRA CO., LTD. For details of the product, contact SYSMEXRA CO., LTD.
*2 Product manufactured by OMRON Corporation. For details of the product, contact OMRON Corporation.
*3 GT25-W, GT2505-V does not support the option device.
*4 When a GT10-C02H-6PT9P unit of the sub version A or B is used, do not ground the case of the D-sub (9-pin) connector.

When connecting to multiple Temperature controllers/Digital indication controllers (RS-485 communication)

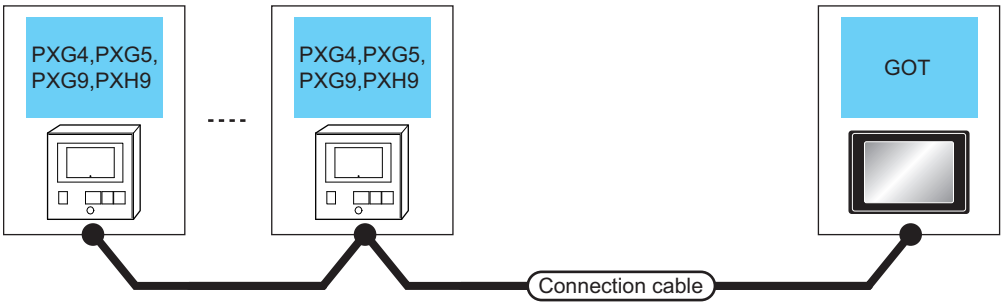

Temperature controller/ Digital indication controller		Connection cable		GOT		Number of connectable equipment
Model name	Communication Type	Cable model Connection diagram number	Max. distance	Option device	Model	
PXG4 PXG5 PXG9 PXH9	RS-485	User preparing Page 171 RS-485 connection diagram 4)	500m*1	FA-LTBGT2R4CBL05(0.5m)*2 FA-LTBGT2R4CBL10(1m)*2 FA-LTBGT2R4CBL20(2m)*2	GT27 GT25 GT23 *4	Up to 31 Temperature controllers/Digital indication controllers for 1 GOT
		User preparing Page 172 RS-485 connection diagram 5)	500m	GT15-RS4-TE	GT27 GT25 *3*4	
		User preparing Page 174 RS-485 connection diagram 9)	500m	GT14-RS2T4-9P *5	GT25 *6	
		User preparing Page 173 RS-485 connection diagram 7)	500m	- (Built into GOT)	GT27 GT25 GT23 GT21 GT21 GS *7	
		User preparing Page 173 RS-485 connection diagram 8)	500m	- (Built into GOT)	GT21 GT21 GT21 GT21	

*1 Including the cable length of the option devices.
*2 Product manufactured by MITSUBISHI ELECTRIC ENGINEERING COMPANY LIMITED. For details of the product, contact MITSUBISHI ELECTRIC ENGINEERING COMPANY LIMITED.
*3 Not available to GT25-W.
*4 Not available to GT2505-V.
*5 Connect it to the RS-232 interface (built in the GOT).
*6 Only available to GT2505-V.
*7 Only available to GS21-W-N for GS21.

Connecting to PXF4, PXF5 or PXF9

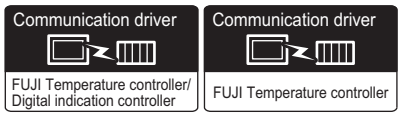

When connecting via the RS-232 communication

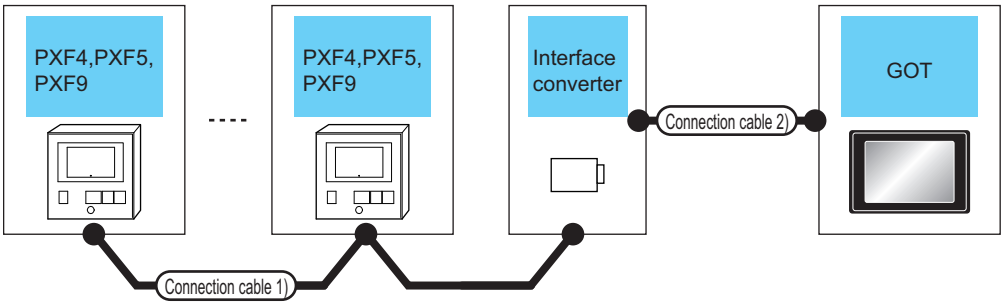

Temperature controller	Connection cable 1)		Interface converter		Connection cable 2)		GOT		Number of connectable equipment
Model name	Cable model Connection diagram number	Max. distance	Model name	Communication Type	Cable model Connection diagram number	Max. distance	Option device*2	Model	
PXF4 PXF5 PXF9	User preparing Page 172 RS-485 connection diagram 6)	500m	K3SC-10*1	RS-232	User preparing Page 168 RS-232 connection diagram 3)	15m	- (Built into GOT)	GT27 GT25 GT23 GT21(07W) GT21(05Q) GS	Up to 31 temperature controllers for 1 GOT
							GT15-RS2-9P	GT27 GT25	
							GT10-C02H-6PT9P*3	GT21(03P,04P R4) GT21(03P,04P R2)	
					User preparing Page 169 RS-232 connection diagram 6)	15m	- (Built into GOT)	GT21(04R) GT21(03P,04P R2)	

*1 Product manufactured by OMRON Corporation. For details of the product, contact OMRON Corporation.
*2 GT25-W, GT2505-V does not support the option device.
*3 When a GT10-C02H-6PT9P unit of the sub version A or B is used, do not ground the case of the D-sub (9-pin) connector.

When connecting via RS-485 communication

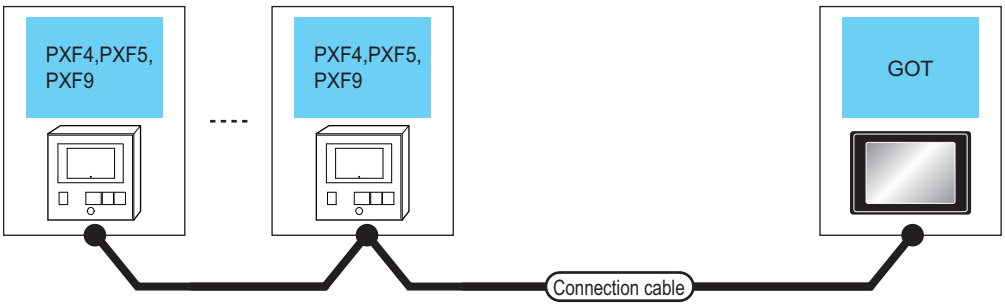

Temperature controller		Connection cable		GOT		Number of connectable equipment
Model name	Communication Type	Cable model Connection diagram number	Max. distance	Option device	Model	
PXF4 PXF5 PXF9	RS-485	User preparing Page 171 RS-485 connection diagram 4)	500m*1	FA-LTBGT2R4CBL05(0.5m)*2 FA-LTBGT2R4CBL10(1m)*2 FA-LTBGT2R4CBL20(2m)*2	GT27 GT25 *4	Up to 31 temperature controllers for 1 GOT
		User preparing Page 172 RS-485 connection diagram 5)	500m	GT15-RS4-TE	GT27 GT25 *3*4	
		User preparing Page 174 RS-485 connection diagram 9)	500m	GT14-RS2T4-9P *5	GT25 *6	
		User preparing Page 173 RS-485 connection diagram 7)	500m	- (Built into GOT)	GT27 GT25 GT23 GT21 GT21 GS *7	
		User preparing Page 173 RS-485 connection diagram 8)	500m	- (Built into GOT)	GT21 GT21 GT21	

*1 Including the cable length of the option devices.
*2 Product manufactured by MITSUBISHI ELECTRIC ENGINEERING COMPANY LIMITED. For details of the product, contact MITSUBISHI ELECTRIC ENGINEERING COMPANY LIMITED.
*3 Not available to GT25-W.
*4 Not available to GT2505-V.
*5 Connect it to the RS-232 interface (built in the GOT).
*6 Only available to GT2505-V.
*7 Only available to GS21-W-N for GS21.

Connecting to PUMA or PUMB

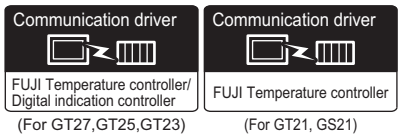

(For GT27,GT25,GT23) (For GT21, GS21)

When connecting to one Multi-loop/module type temperature controller

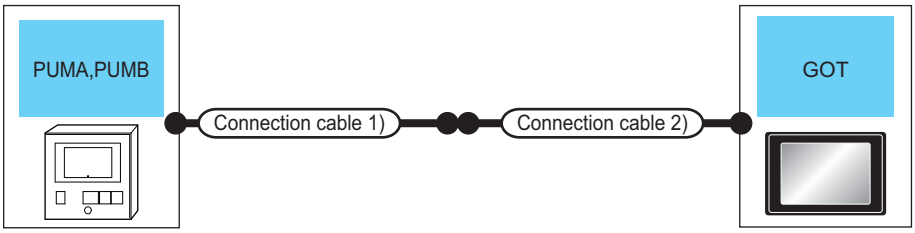

Multi-loop/ module type temperature controller	Connection cable 1)		Connection cable 2)	Total distance*4	GOT		Number of connectable equipment
Model name	Communication Type	Cable model	Connection diagram number		Option device*2	Model	
PUMA, PUMB	RS-232	PUMZ*L01*1 (ZPC loader communication cable (RS232))	-	3m	- (Built into GOT)	GT27 GT25 GT23 GT21(07W) GT21(05Q) GS	1 Multi-loop/ module type temperature controller for 1 GOT
					GT15-RS2-9P	GT27 GT25	
					GT10-C02H-6PT9P*3	GT21(03P,04P R4) GT21(03P,04P R2)	
			User preparing Page 169 RS-232 connection diagram 7)	15m	- (Built into GOT)	GT21(04R) GT21(03P,04P R2)	

*1 Product manufactured by FUJI CO., LTD. For details of the product, contact FUJI CO., LTD.
*2 GT25-W, GT2505-V does not support the option device.
*3 When a GT10-C02H-6PT9P unit of the sub version A or B is used, do not ground the case of the D-sub (9-pin) connector.
*4 Distance from the GOT to temperature controller (connection cable 1 + connection cable 2)

When connecting to multiple Multi-loop/module type temperature controllers (RS-232 communication)

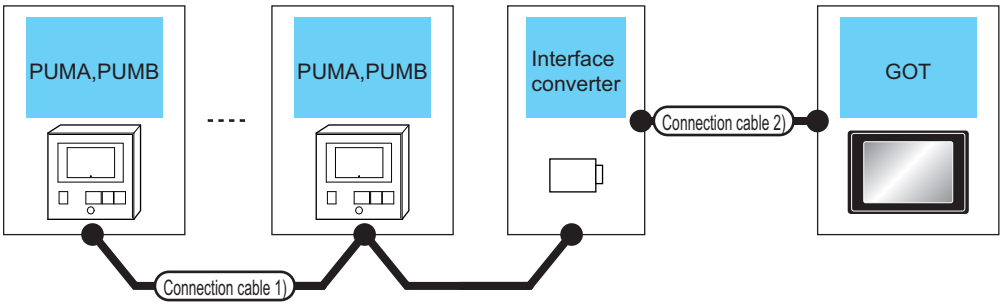

Multi-loop/ module type temperature controller	Connection cable 1)		Interface converter		Connection cable 2)		GOT		Number of connectable equipment
Model name	Cable model Connection diagram number	Max. distance	Model name	Communication Type	Cable model Connection diagram number	Max. distance	Option device*2	Model	
PUMA PUMB	User preparing Page 172 RS-485 connection diagram 6)	500m	K3SC-10*1	RS-232	User preparing Page 168 RS-232 connection diagram 3)	15m	- (Built into GOT)	GT27 GT25 GT23 GT21(07W) GT21(05Q) GS	Up to 31 Multi-loop/module type temperature controllers for 1 GOT
							GT15-RS2-9P	GT27 GT25	
							GT10-C02H-6PT9P*3	GT21(03P 04P R4) GT21(03P 04P R2)	
					User preparing Page 169 RS-232 connection diagram 6)		- (Built into GOT)	GT21(04R) GT21(03P 04P R2)	

*1 Product manufactured by OMRON Corporation. For details of the product, contact OMRON Corporation.

*2 GT25-W, GT2505-V does not support the option device.

*3 When a GT10-C02H-6PT9P unit of the sub version A or B is used, do not ground the case of the D-sub (9-pin) connector.

When connecting to multiple Multi-loop/module type temperature controllers (RS-485 communication)

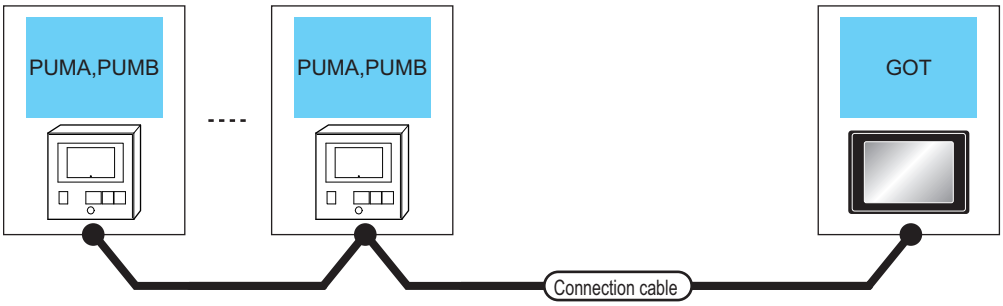

Multi-loop/module type temperature controller		Connection cable		GOT		Number of connectable equipment
Model name	Communication Type	Cable model Connection diagram number	Max. distance	Option device	Model	
PUMA PUMB	RS-485	User preparing Page 171 RS-485 connection diagram 4)	500m*1	FA-LTBGT2R4CBL05(0.5m)*2 FA-LTBGT2R4CBL10(1m)*2 FA-LTBGT2R4CBL20(2m)*2	GT27 GT25 *4	Up to 31 Multi-loop/ module type temperature controllers for 1 GOT
		User preparing Page 172 RS-485 connection diagram 5)	500m	GT15-RS4-TE	GT27 GT25 *3*4	
		User preparing Page 174 RS-485 connection diagram 9)	500m	GT14-RS2T4-9P *5	GT25 *6	
		User preparing Page 173 RS-485 connection diagram 7)	500m	- (Built into GOT)	GT27 GT25 GT23 GT21 GT21 GS *7	
		User preparing Page 173 RS-485 connection diagram 8)	500m	- (Built into GOT)	GT21 GT21 GT21	

*1 Including the cable length of the option devices.
*2 Product manufactured by MITSUBISHI ELECTRIC ENGINEERING COMPANY LIMITED. For details of the product, contact MITSUBISHI ELECTRIC ENGINEERING COMPANY LIMITED.
*3 Not available to GT25-W.
*4 Not available to GT2505-V.
*5 Connect it to the RS-232 interface (built in the GOT).
*6 Only available to GT2505-V.
*7 Only available to GS21-W-N for GS21.

5.3 Connection Diagram

The following diagram shows the connection between the GOT and the temperature controller.

RS-232 cable

Connection diagram

■RS-232 connection diagram 1)

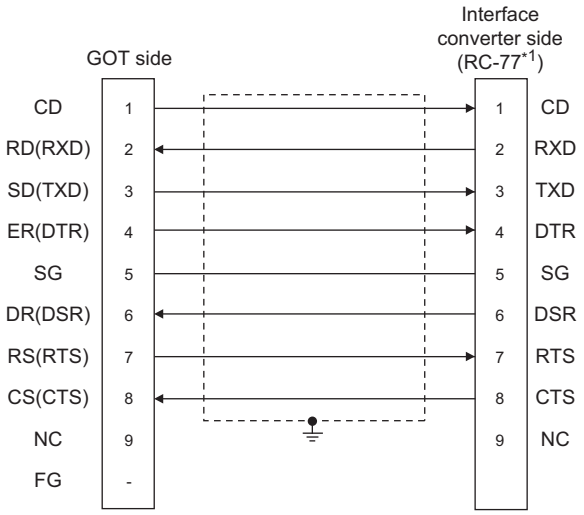

*1 Use the interface converter in the DCE mode.

■RS-232 connection diagram 2)

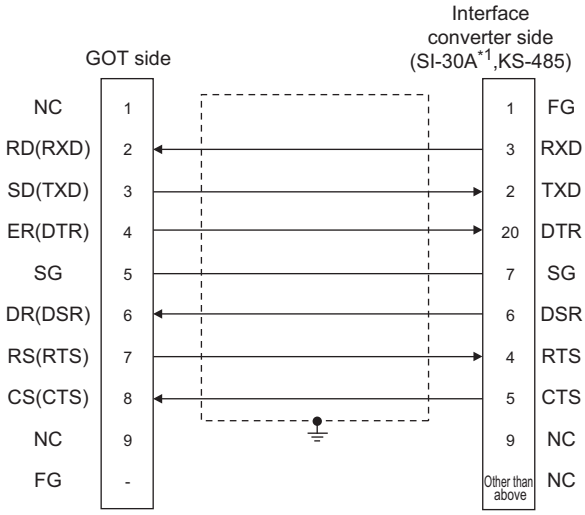

*1 Use the interface converter in the DCE mode.

■RS-232 connection diagram 3)

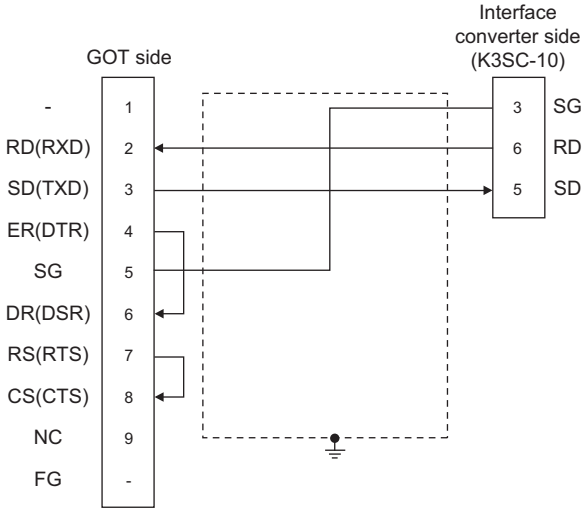

■RS-232 connection diagram 4)

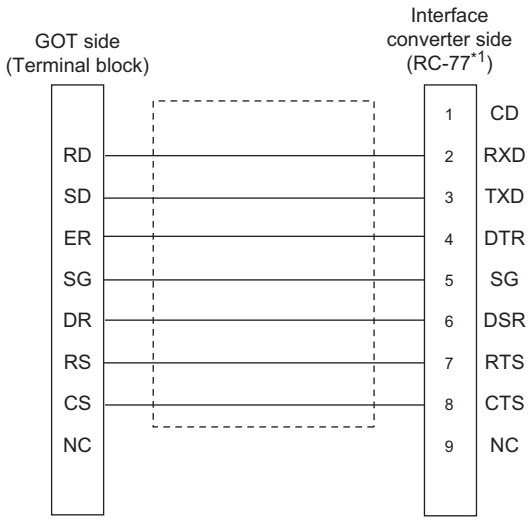

*1 Use the interface converter in the DCE mode.

■RS-232 connection diagram 5)

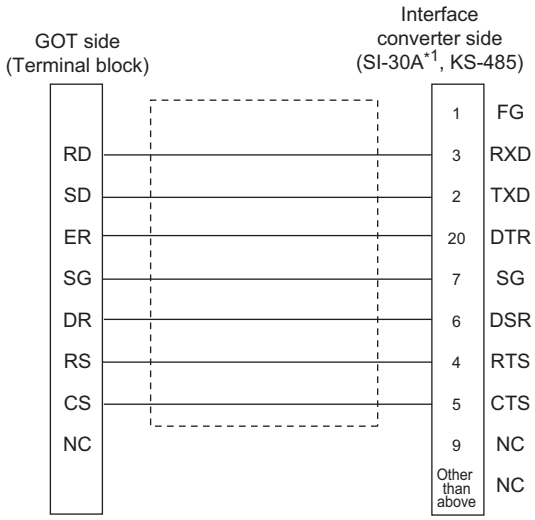

*1 Use the interface converter in the DCE mode.

■RS-232 connection diagram 6)

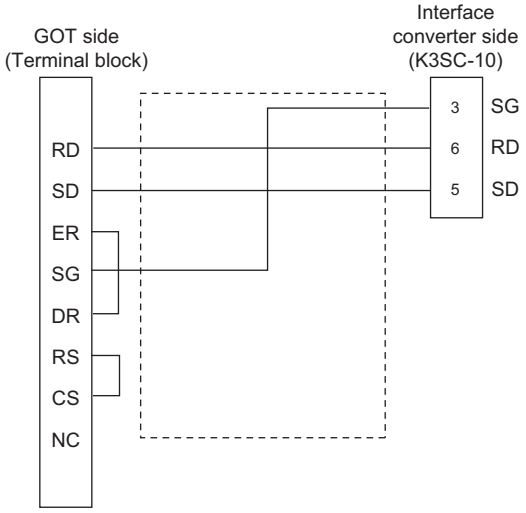

■RS-232 connection diagram 7)

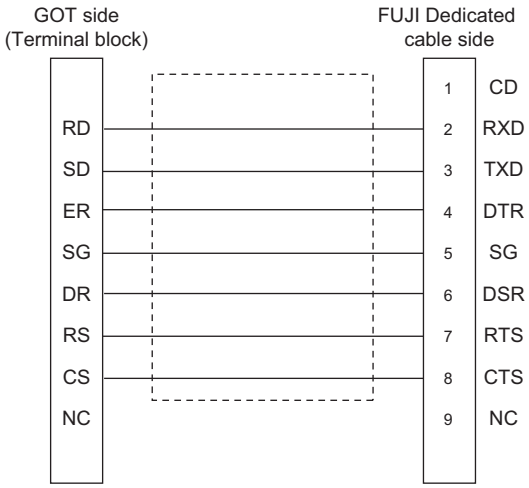

Precautions when preparing a cable

■Cable length

The length of the RS-232 cable must be 15m or less.

■GOT side connector

For the GOT side connector, refer to the following.

☞ Page 58 GOT connector specifications

■FUJI temperature controller side connector

Use the connector compatible with the FUJI temperature controller side.

For details, refer to the user's manual of the FUJI temperature controller.

RS-485 cable

Connection diagram

■RS-485 connection diagram 1)

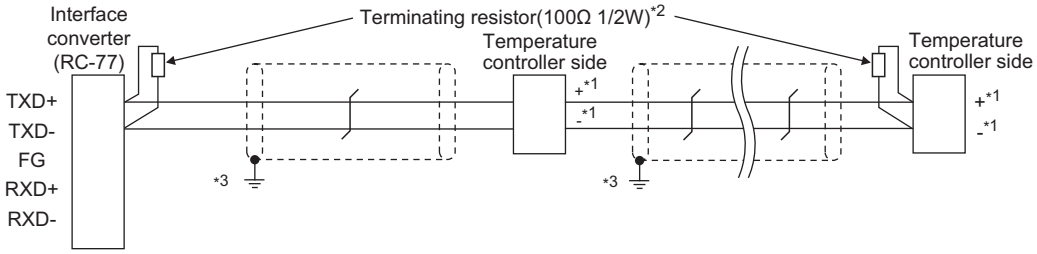

*1 Pin No. of temperature controller differs depending on the model. Refer to the following table.

Signal name	Model of temperature controller					
	PXR3	PXR4	PXR5/9	PXG4	PXG5/9	PXH9
	Pin No.	Pin No.	Pin No.	Pin No.	Pin No.	Pin No.
+	15	7	1	7	1	14
-	14	8	2	8	2	16

*2 Terminating resistor should be provided for a temperature controller which will be a terminal.
Terminating resistor should be provided outside for a interface converter which will be a terminal, with the terminating switch turned OFF.

*3 Connect FG grounding to the appropriate part of a cable shield line.

■RS-485 connection diagram 2)

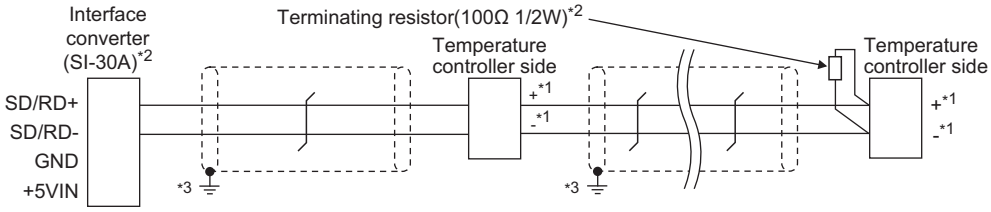

*1 Pin No. of temperature controller differs depending on the model. Refer to the following table.

Signal name	Model of temperature controller					
	PXR3	PXR4	PXR5/9	PXG4	PXG5/9	PXH9
	Pin No.	Pin No.	Pin No.	Pin No.	Pin No.	Pin No.
+	15	7	1	7	1	14
-	14	8	2	8	2	16

*2 Terminating resistor should be provided for a temperature controller which will be a terminal.
Turn ON the terminating switch of an interface converter which will be a terminal.

*3 Connect FG grounding to the appropriate part of a cable shield line.

■RS-485 connection diagram 3)

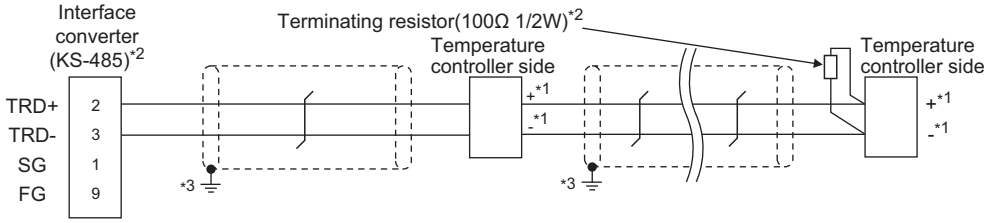

*1 Pin No. of temperature controller differs depending on the model. Refer to the following table.

Signal name	Model of temperature controller					
	PXR3	PXR4	PXR5/9	PXG4	PXG5/9	PXH9
	Pin No.	Pin No.	Pin No.	Pin No.	Pin No.	Pin No.
+	15	7	1	7	1	14
-	14	8	2	8	2	16

*2 Terminating resistor should be provided for a temperature controller which will be a terminal.
Turn ON the terminating switch of an interface converter which will be a terminal.

*3 Connect FG grounding to the appropriate part of a cable shield line.

■RS-485 connection diagram 4)

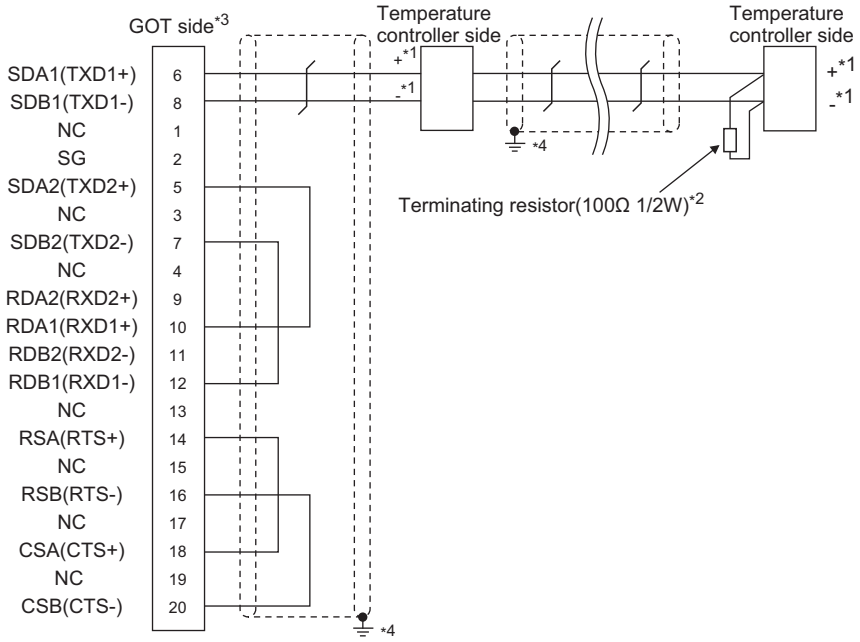

*1 Pin No. of temperature controller differs depending on the model. Refer to the following table.

Signal name	Model of temperature controller								
	PXR3	PXR4	PXR5/9	PXG4	PXG5/9	PXH9	PXF4	PXF5/9	PUMA/B
	Pin No.	Pin No.	Pin No.	Pin No.	Pin No.	Pin No.	Pin No.	Pin No.	Pin No.
+	15	7	1	7	1	14	7	25	3
-	14	8	2	8	2	16	8	26	4

*2 Terminating resistor should be provided for a temperature controller which will be a terminal.

*3 Set the terminating resistor of GOT side which will be a terminal.
☞ Page 174 Connecting terminating resistors

*4 Connect FG grounding to the appropriate part of a cable shield line.

■RS-485 connection diagram 5)

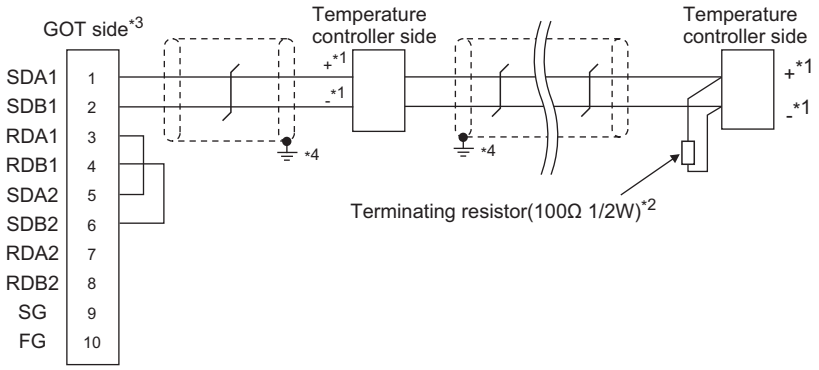

*1 Pin No. of temperature controller differs depending on the model. Refer to the following table.

Signal name	Model of temperature controller								
	PXR3	PXR4	PXR5/9	PXG4	PXG5/9	PXH9	PXF4	PXF5/9	PUMA/B
	Pin No.	Pin No.	Pin No.	Pin No.	Pin No.	Pin No.	Pin No.	Pin No.	Pin No.
+	15	7	1	7	1	14	7	25	3
-	14	8	2	8	2	16	8	26	4

*2 Terminating resistor should be provided for a temperature controller which will be a terminal.

*3 Set the terminating resistor of GOT side which will be a terminal.

☞ Page 174 Connecting terminating resistors

*4 Connect FG grounding to the appropriate part of a cable shield line.

■RS-485 connection diagram 6)

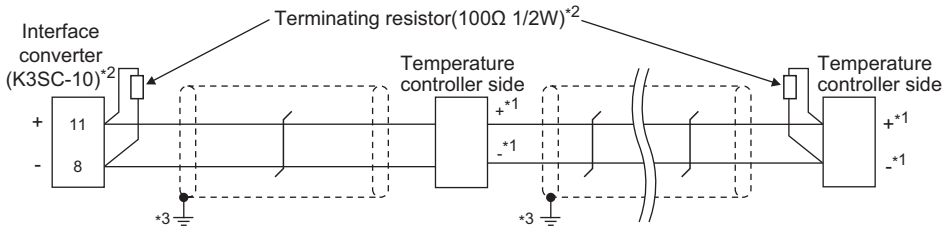

*1 Pin No. of temperature controller differs depending on the model. Refer to the following table.

Signal name	Model of temperature controller								
	PXR3	PXR4	PXR5/9	PXG4	PXG5/9	PXH9	PXF4	PXF5/9	PUMA/B
	Pin No.	Pin No.	Pin No.	Pin No.	Pin No.	Pin No.	Pin No.	Pin No.	Pin No.
+	15	7	1	7	1	14	7	25	3
-	14	8	2	8	2	16	8	26	4

*2 Terminating resistor should be provided for a temperature controller and an interface converter which will be terminals.

*3 Connect FG grounding to the appropriate part of a cable shield line.

■RS-485 connection diagram 7)

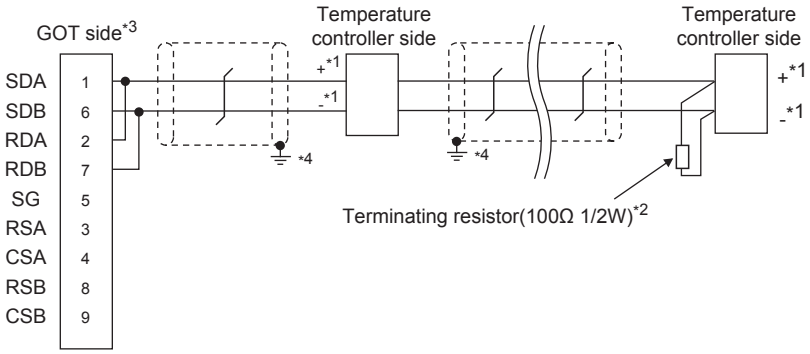

*1 Pin No. of temperature controller differs depending on the model. Refer to the following table.

Signal name	Model of temperature controller								
	PXR3	PXR4	PXR5/9	PXG4	PXG5/9	PXH9	PXF4	PXF5/9	PUMA/B
	Pin No.	Pin No.	Pin No.	Pin No.	Pin No.	Pin No.	Pin No.	Pin No.	Pin No.
+	15	7	1	7	1	14	7	25	3
-	14	8	2	8	2	16	8	26	4

*2 Terminating resistor should be provided for a temperature controller which will be a terminal.

*3 Set the terminating resistor of GOT side which will be a terminal.

☞ Page 174 Connecting terminating resistors

*4 Connect FG grounding to the appropriate part of a cable shield line.

■RS-485 connection diagram 8)

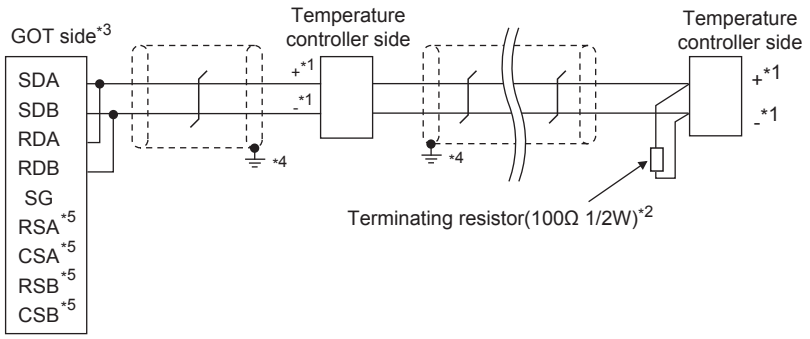

*1 Pin No. of temperature controller differs depending on the model. Refer to the following table.

Signal name	Model of temperature controller								
	PXR3	PXR4	PXR5/9	PXG4	PXG5/9	PXH9	PXF4	PXF5/9	PUMA/B
	Pin No.	Pin No.	Pin No.	Pin No.	Pin No.	Pin No.	Pin No.	Pin No.	Pin No.
+	15	7	1	7	1	14	7	25	3
-	14	8	2	8	2	16	8	26	4

*2 Terminating resistor should be provided for a temperature controller which will be a terminal.

*3 Set the terminating resistor of GOT side which will be a terminal.

☞ Page 174 Connecting terminating resistors

*4 Connect FG grounding to the appropriate part of a cable shield line.

*5 The signals RSA, RSB, CSA, and CSB are not provided for GT2104-PMBD, GT2103-PMBD.

■RS-485 connection diagram 9)

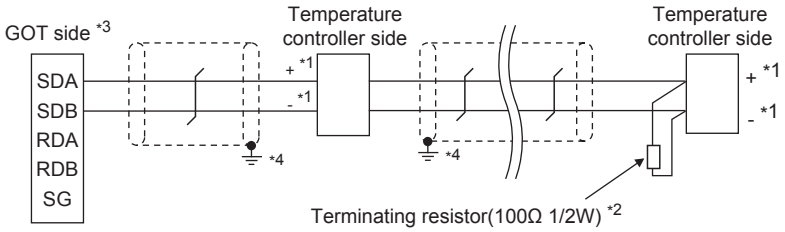

*1 Pin No. of temperature controller differs depending on the model. Refer to the following table.

Signal name	Model of temperature controller								
	PXR3	PXR4	PXR5/9	PXG4	PXG5/9	PXH9	PXF4	PXF5/9	PUMA/B
	Pin No.	Pin No.	Pin No.	Pin No.	Pin No.	Pin No.	Pin No.	Pin No.	Pin No.
+	15	7	1	7	1	14	7	25	3
-	14	8	2	8	2	16	8	26	4

*2 Terminating resistor should be provided for a temperature controller which will be a terminal.

*3 Set the 2-wire/4-wire terminating resistor setting switch of the RS-232/485 signal conversion adapter as shown below.
2-wire/4-wire: 2-wire (1 pair)
Terminating resistor: 110Ω
☞ Page 67 Setting the RS-232/485 signal conversion adaptor

*4 Connect FG grounding to the appropriate part of a cable shield line.

Precautions when preparing a cable

■Cable length

The length of the RS-485 cable must be 500m or less.

■GOT side connector

For the GOT side connector, refer to the following.

☞ Page 58 GOT connector specifications

■FUJI temperature controller side connector

Use the connector compatible with the FUJI temperature controller side.

For details, refer to the user's manual of the FUJI temperature controller.

Connecting terminating resistors

■GOT side

• For GT27, GT25(Except GT2505-V), GT23

Set the terminating resistor setting switch of the GOT main unit to enable.

• For GT2505-V, GT21, and GS21-W-N

Set the terminating resistor selector to 110 Ω.

For the procedure to set the terminating resistor, refer to the following.

☞ Page 62 Terminating resistors of GOT

■FUJI temperature controller side

When connecting a FUJI temperature controller to the GOT, a terminating resistor must be connected.

☞ Page 177 Temperature Controller Side Setting

5.4 GOT Side Settings

Setting the communication interface (Controller setting)

Set the channel of the connected equipment.

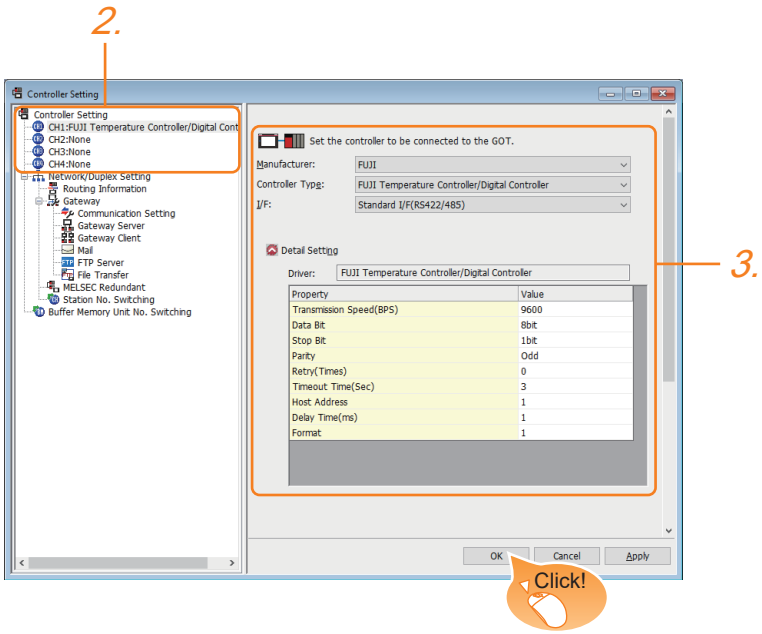

1. Select [Common] → [Controller Setting] from the menu.

2. In the [Controller Setting] window, select the channel No. to be used from the list menu.

3. Set the following items.

- [Manufacturer]: [FUJI]
- [Controller Type]: [FUJI Temperature Controller/Digital Controller]
- [I/F]: Interface to be used
- [Detail Setting]: Configure the settings according to the usage environment.

☞ Page 176 Communication detail settings

4. When you have completed the settings, click the [OK] button.

Point

The settings of connecting equipment can be confirmed in [I/F Communication Setting].
For details, refer to the following.

☞ Page 48 I/F communication setting

Communication detail settings

Make the settings according to the usage environment.

Property	Value
Transmission Speed(BPS)	9600
Data Bit	8 bit
Stop Bit	1 bit
Parity	Odd
Retry(Times)	0
Timeout Time(Sec)	3
Host Address	1
Delay Time(ms)	1
Format	1

Item	Description	Range
Transmission Speed	Set this item when change the transmission speed used for communication with the connected equipment. (Default: 9600bps)	9600bps, 19200bps, 38400bps, 57600bps, 115200bps
Data Bit	Set this item when change the data length used for communication with the connected equipment. (Default: 8bits)	7bits/8bits
Stop Bit	Specify the stop bit length for communications. (Default: 1bit)	1bit/2bits
Parity	Specify whether or not to perform a parity check, and how it is performed during communication. (Default: Odd)	None Even Odd
Retry	Set the number of retries to be performed when a communication error occurs. (Default: 0time)	0 to 5times
Timeout Time	Set the time period for a communication to time out. (Default: 3sec)	1 to 30sec
Host Address	Specify the host address (station No. of the GOT to which the temperature controller is connected) in the connected network. (Default: 1)	1 to 255
Delay Time	Set this item to adjust the transmission timing of the communication request from the GOT. (Default: 5ms)	0 to 300ms
Format	Select the communication format. (Default: 1)	1/2/3

Point

• Host address

Do not specify a number between 200 and 215.

• Format

When connecting to PXH/PUM, specify the [Format 1].

When connecting to only PXR/PXG, specifying the [Format 2] is recommended.

When connecting to only PXF, specifying the [Format 3] is recommended.

• Delay Time

Set the delay time to 5ms or more.

• Communication interface setting by the Utility

The communication interface setting can be changed on the Utility's [Communication Settings] after writing [Communication Settings] of project data.

For details on the Utility, refer to the following manual.

GOT2000 Series User's Manual (Utility)

• Precedence in communication settings

When settings are made by GT Designer3 or the Utility, the latest setting is effective.

5.5 Temperature Controller Side Setting

Point

• FUJI temperature controller

For details of FUJI temperature controller, refer to the following manual.

User's Manual of the FUJI temperature controller

• Interface converter

For details on communication settings of the interface converter, refer to the following manual.

User's Manual of interface converter

Model name		Refer to
Temperature controller	PXR3, PXR4, PXR5, PXR9	☞ Page 177 Connecting to PXR3/4/5/9
	PXG4, PXG5, PXG9	☞ Page 178 Connecting to PXG4, PXG5 or PXG9
	PXF4, PXF5, PXF9	☞ Page 179 Connecting to PXF4, PXF5 or PXF9
Digital indication controller	PXH9	☞ Page 178 Connecting to PXH9
Multi-loop/module type temperature controller	PUMA, PUMB	☞ Page 179 Connecting to PUMA or PUMB
Interface converter	RC-77	☞ Page 180 Connecting to interface converter (RC-77)
	SI-30A	☞ Page 181 Connecting to interface converter (SI-30A)
	KS-485	☞ Page 182 Connecting to interface converter (KS-485)
	K3SC-10	☞ Page 182 Connecting to interface converter (K3SC-10)

Connecting to PXR3/4/5/9

Communication settings

Make the communication settings by operating the key of the temperature controller.

Item	Set value
Transmission speed	9600bps (fixed)
Data bit	8bits (fixed)
Parity bit*1	Even, Odd, None
Stop bit	1bit (fixed)
Station No.*2	1 to 255
Communication protocol	MODBUS

*1 Adjust the settings with GOT settings.

*2 Avoid duplication of the station No. with any of the other units.

Connecting to PXG4, PXG5 or PXG9

Communication settings

Make the communication settings by operating the key of the temperature controller.

■RS-485 communication settings

Item	Set value
Transmission speed*1	9600bps, 19200bps
Data bit	8bits (fixed)
Parity bit*1	Even, Odd, None
Stop bit*1	1bit (fixed)
Station No.*2	1 to 255
Communication permissions*3	Read only permission or read and overwrite permission

*1 Adjust the settings with GOT settings.
*2 Avoid duplication of the station No. with any of the other units.
*3 Set as necessary.

■RS-232 communication settings (PC loader communication)

Item	Set value
Transmission speed	9600bps (fixed)
Data bit	8bits (fixed)
Parity bit	None (fixed)
Stop bit	1bit (fixed)

Connecting to PXH9

Communication settings

Make the communication settings by operating the key of the temperature controller.

■RS-485 communication settings

Item	Set value
Transmission speed*1	9600bps, 19200bps, 38400bps
Data bit	8bits (fixed)
Parity bit*1	Even, Odd, None
Stop bit	1bit (fixed)
Station No.*2	1 to 255

*1 Adjust the settings with GOT settings.
*2 Avoid duplication of the station No. with any of the other units.

■RS-232 communication settings (PC loader communication)

Item	Set value
Transmission speed*1	9600bps, 19200bps, 38400bps
Data bit	8bits (fixed)
Parity bit*1	Even, Odd, None
Stop bit	1bit (fixed)
Station No.	1 (fixed)

*1 Adjust the settings with GOT settings.

Connecting to PXF4, PXF5 or PXF9

Communication settings

Make the communication settings by operating the key of the temperature controller.

Item	Set value
Transmission speed*1	9600bps, 19200bps, 38400bps, 115200bps
Data bit	8bits (fixed)
Parity bit*1	Even, Odd, None
Stop bit*1	1bit (fixed)
Station No.*2	1 to 255
Communication permissions*3	Read only permission or read and overwrite permission
Communication type selection	MODBUS RTU

*1 Adjust the settings with GOT settings.
*2 Avoid duplication of the station No. with any of the other units.
*3 Set as necessary.

Connecting to PUMA or PUMB

Communication settings

Make the communication settings by the PC loader software for PUM series.

■RS-485 communication settings

Item	Set value
Transmission speed*1	9600bps, 19200bps, 38400bps, 115200bps
Data bit	8bits (fixed)
Parity bit*1	Even, Odd, None
Stop bit*1	1bit (fixed)
Station No.*2*3	1 to 16
Communication permissions*4	Read only permission or read and overwrite permission

*1 Adjust the settings with GOT settings.
*2 Avoid duplication of the station No. with any of the other units.
*3 Cannot be set by the PC loader software for PUM series. Set the station number by operating the key of the temperature controller.
*4 Set as necessary.

■RS-232 communication settings (PC loader communication)

Item	Set value
Transmission speed	19200bps (fixed)
Data bit	8bits (fixed)
Parity bit	None (fixed)
Stop bit	1bit (fixed)
Station No.*1	1 to 16

*1 Avoid duplication of the station No. with any of the other units.

Connecting to interface converter (RC-77)

Communication settings

Make the communication settings using setting switches.

Item	Set value
Transmission speed*1	9600bps, 19200bps, 38400bps
MANUAL-AUTO	AUTO
DCE/DTE switching	DCE
RS-422/485 switching	RS-485
Terminating resistor selection	OFF

*1 Adjust with GOT and temperature controller settings.

Settings by switch

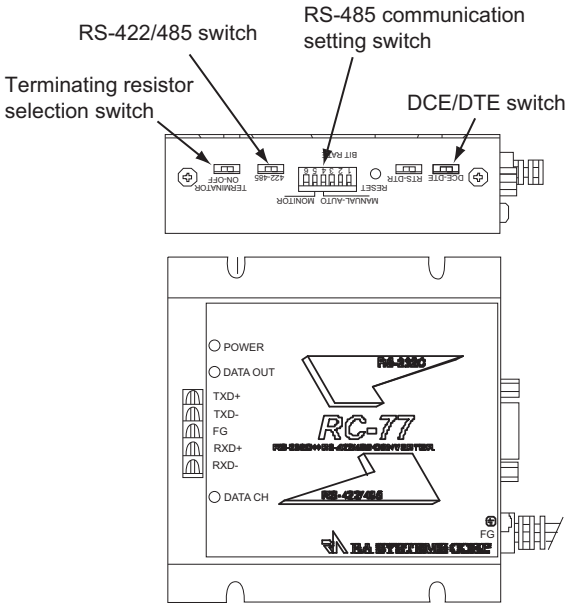

■Settings of transmission speed and MANUAL-AUTO

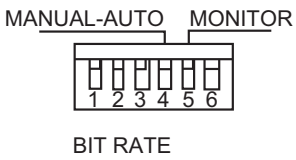

Setting item	Set value	Switch No.			
		1	2	3	4
Transmission speed	9600bps	ON	ON	OFF	
	19200bps	OFF	OFF	ON	
	38400bps	ON	OFF	ON	
MANUAL-AUTO	AUTO				ON

■Settings of DCE/DTE, RS-422/485 and terminating resistor selection

Setting item	Set value
DCE/DTE	DCE
RS-422/485	RS-485
Terminating resistor selection	OFF

Connecting to interface converter (SI-30A)

Communication settings

Make the communication settings using setting switches.

Item	Set value
Transmission speed	9600bps
MANUAL-AUTO	AUTO
DCE/DTE switching	DCE
Terminating resistor selection*1	ON/OFF

*1 Set as necessary.

Settings by switch

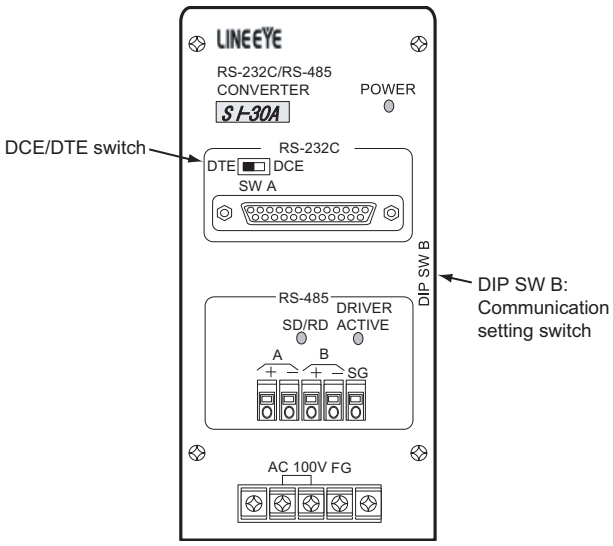

■Settings of transmission speed, MANUAL-AUTO and terminating resistor selection

Setting item	Set value	Switch No. of DIP SWB				
		1	2	3	4	5
Transmission speed	9600bps	ON	ON	OFF		
MANUAL-AUTO	AUTO				ON	
Terminating resistor selection*1	Enable					ON
	Disable					OFF

*1 Set as necessary.

■Setting of DCE/DTE switching

DTE DCE
SW A

Setting item	Set value
DCE/DTE	DCE

Connecting to interface converter (KS-485)

Communication settings

Make the communication settings using setting switches.

Item	Set value
Transmission speed	9600bps
Terminating resistor selection*1	ON/OFF

*1 Set as necessary.

Settings by switch

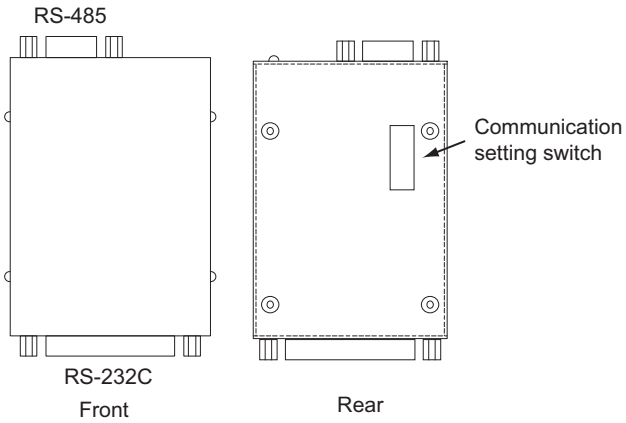

■Settings of transmission speed and terminating resistor selection

Setting item	Set value	Switch No.							
		1	2	3	4*2	5	6*2	7	8
Transmission speed	9600bps	ON	OFF	ON	—	ON	—		
Terminating resistor selection*1	Enable							ON	ON
	Disable							OFF	OFF

*1 Set as necessary.
*2 Disabled.

Connecting to interface converter (K3SC-10)

Communication settings

Make the communication settings by operating the DIP switch of the temperature controller.

Item	Set value
Transmission speed*1	9600bps, 19200bps, 38400bps
Data bit	8bits
Parity bit*1	Odd, even, none
Stop bit	1bit
Communication Type	RS-232C ↔ RS-485
Echo back	Without

*1 Make the same setting as that of GOT side.

Settings by DIP switch

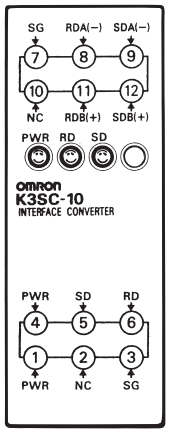

Front of K3SC-10 body

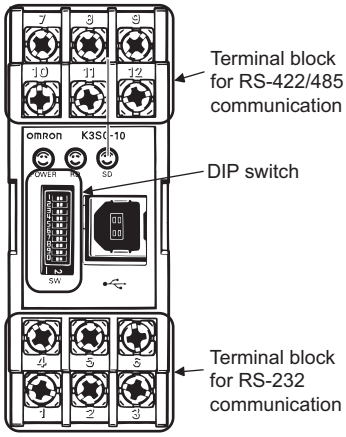

Inside of K3SC-10 body
(When removing the front cover)

■Transmission speed settings

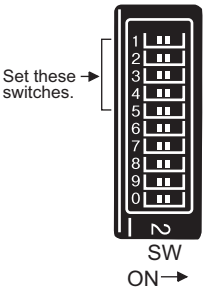

Transmission speed (bps)	Switch No.		
	1	2	3
9600	OFF	OFF	OFF
19200	ON	OFF	ON
38400	OFF	ON	ON

■Settings of data length, parity bit, stop bit, master/slave device and echoback

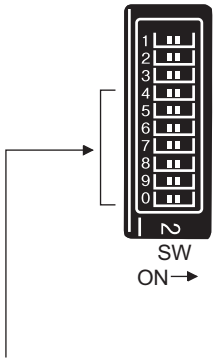

Set these switches.

Setting item	Set value	Switch No.						
		4	5	6	7	8	9	0
Stop bit	1bit		ON					
Parity bit	Even			OFF	OFF			
	Odd			ON	OFF			
	None			OFF	ON			
Communication Type	RS-232C ↔ RS-485					OFF	OFF	
Echo back	Without							OFF

Station number setting

Set each station number so that no station number overlaps.

The station number can be set without regard to the cable connection order. There is no problem even if station numbers are not consecutive.

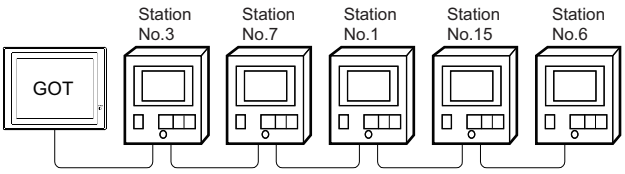

Examples of station number setting

Direct specification

When setting the device, specify the station number of the temperature controller of which data is to be changed.

Specification range
1 to 199
216 to 255

Point

Specifying a station No. between 200 and 215

(Example of specifying the station No. 215)

Step.1 Set the station No. to "200".

Step.2 Input "215" to the internal device GD10.

Step.3 The station No. 215 is specified.

For details, refer to (2) Indirect specification shown below.

Indirect specification

When setting the device, indirectly specify the station number of the inverter of which data is to be changed using the 16-bit GOT internal data register (GD10 to GD25).

When specifying the station No. from 200 to 215 on GT Designer3, the value of GD10 to GD25 compatible to the station No. specification will be the station No. of the temperature controller.

Specification station NO.	Compatible device	Setting range
200	GD10	1 to 255 For the setting other than the above, error (dedicated device is out of range) will occur.
201	GD11	
202	GD12	
203	GD13	
204	GD14	
205	GD15	
206	GD16	
207	GD17	
208	GD18	
209	GD19	
210	GD20	
211	GD21	
212	GD22	
213	GD23	
214	GD24	
215	GD25	

5.6 Settable Device Range

For the device setting dialog and range of devices usable in the GOT, refer to the following.
☞ Page 567 FUJI equipment ([FUJI Temperature Controller/Digital Controller])

5.7 Precautions

Station number settings of temperature controller

In the system configuration, the temperature controller with the station number set with the host address must be included.
For details of host address setting, refer to the following.
☞ Page 176 Communication detail settings

FIX processing of temperature controller

The temperature controller power must not be turned off during the FIX processing. Otherwise, data within the non-volatile memory will corrupt and the temperature controller will be unavailable.

GOT clock control

Since the temperature controller does not have a clock function, the settings of "time adjusting" or "time broad cast" by GOT clock control will be disabled.

Disconnecting some of multiple connected equipment

The GOT can disconnect some of multiple connected equipment by setting GOT internal device. For example, the faulty station where a communication timeout error occurs can be disconnected from connected equipment.
For details of GOT internal device setting, refer to the following manual.
📖GT Designer3 (GOT2000) Screen Design Manual

Writing multiple points

If the GOT writes multiple points simultaneously, a system alarm may occur and writing cannot be executed correctly.
In this case, take the following corrective action.

■Refer to the manual of temperature controller to be used, set the points to be written by the GOT simultaneously up to" The maximum numbers of words to be written per 1 message" specified depending on the temperature controllers.

■Set the delay time of communication detail settings.
☞ Page 176 Communication detail settings

6 YASKAWA PLC

- Page 187 Connectable Model List
- Page 188 Serial Connection
- Page 209 Ethernet Connection
- Page 230 Settable Device Range

6.1 Connectable Model List

The following table shows the connectable models.

Model name*1	Clock	Communication	Connectable model	Refer to
GL120 GL130	○	RS-232 RS-422	GT27 GT25 GT23	☞ Page 188 Connecting to GL120 or GL130
GL60S GL60H GL70H	×	RS-232 RS-422	GT27 GT25 GT23	☞ Page 189 Connecting to GL60S, GL60H, or GL70H
MP920 MP930	×	RS-232 RS-422	GT27 GT25 GT23 GT21 GS	☞ Page 190 Connecting to MP920/930, CP-9300MS/ 9200(H), or PROGIC-8
CP-9300MS CP-9200(H) PROGIC-8	×	RS-232	GT27 GT25 GT23	
MP940	×	RS-232 RS-422	GT27 GT25 GT23 GT21 GS	☞ Page 192 Connecting to MP940
CP-9200SH CP-317	×	RS-232	GT27 GT25 GT23 GT21 GS	☞ Page 193 Connecting to CP-9200SH or CP-317
MP2200 MP2300 MP2300S	×	RS-232 RS-422	GT27 GT25 GT23 GT21 GS	☞ Page 194 Connecting to MP2200, MP2300, or MP2300S
MP920 MP2200 MP2300 MP2300S	×	Ethernet	GT27 GT25 GT23 GT21 GS	☞ Page 209 Connecting to MP920, MP2200, MP2300, or MP2300S
CP-9200SH CP-312 CP-317	×	Ethernet	GT27 GT25 GT23 GT21 GS	☞ Page 211 Connecting to CP-9200SH, CP-312, or CP-317
MP3200 MP3300	×	Ethernet	GT27 GT25 GT23 GT21 GS	☞ Page 212 Connecting to MP3200 or MP3300

*1 GOT is not applicable to the multiple CPU system configuration of YASKAWA PLC.

6.2 Serial Connection

Connecting to GL120 or GL130

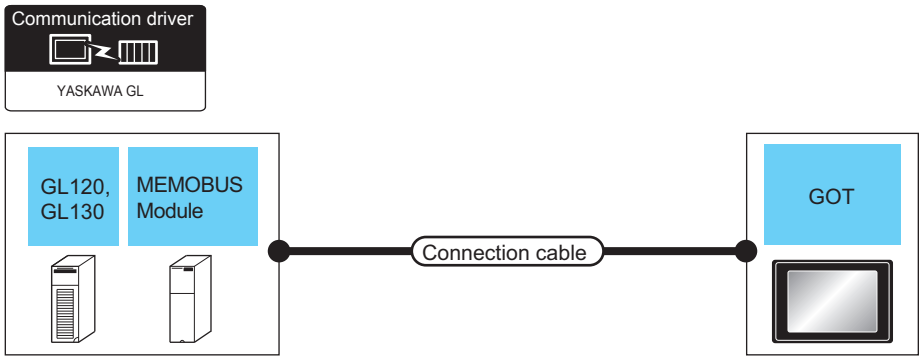

PLC			Connection cable		GOT		Number of connectable equipment
Model name	MEMOBUS module*1	Communication Type	Cable model Connection diagram number	Max. distance	Option device*2	Model	
GL120 GL130	-	RS-232	GT09-C30R20201-9P (3m) or User preparing RS-232 connection diagram 1)	Differs according to PLC side specifications.	- (Built into GOT)	GT27 GT25 GT23	1 GOT for 1 PLC
					GT15-RS2-9P	GT27 GT25	
	JAMSC-120NOM27100	RS-422	GT09-C30R40201-9P (3m) GT09-C100R40201-9P (10m) GT09-C200R40201-9P (20m) GT09-C300R40201-9P (30m) or User preparing RS-422 connection diagram 1)	same as above	- (Built into GOT)	GT27 GT25 GT23	1 GOT for 1 MEMOBUS module
					GT15-RS4-9S	GT27 GT25	

*1 Product manufactured by YASKAWA Electric Corporation. For details of the product, contact YASKAWA Electric Corporation.
*2 GT25-W, GT2505-V does not support the option device.

Connecting to GL60S, GL60H, or GL70H

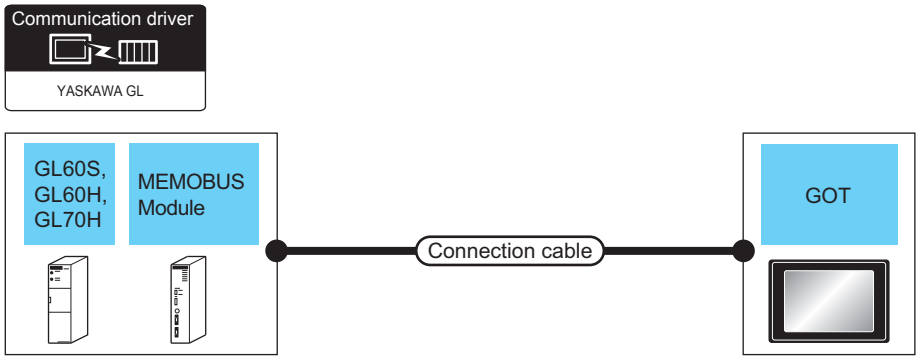

PLC			Connection cable		GOT		Number of connectable equipment
Model name	MEMOBUS module*1	Communication Type	Cable model Connection diagram number	Max. distance	Option device*2	Model	
GL60S GL60H GL70H	JAMSC-IF60 JAMSC-IF61	RS-232	GT09-C30R20201-9P (3m) or User preparing RS-232 connection diagram 1)	Differs according to PLC side specifications.	- (Built into GOT)	GT27 GT25 GT23	1 GOT for 1 MEMOBUS module
					GT15-RS2-9P	GT27 GT25	
	JAMSC-IF612	RS-422	GT09-C30R40201-9P (3m) GT09-C100R40201-9P (10m) GT09-C200R40201-9P (20m) GT09-C300R40201-9P (30m) or User preparing RS-422 connection diagram 1)	same as above	- (Built into GOT)	GT27 GT25 GT23	
					GT15-RS4-9S	GT27 GT25	

*1 Product manufactured by YASKAWA Electric Corporation. For details of the product, contact YASKAWA Electric Corporation.

*2 GT25-W, GT2505-V does not support the option device.

Connecting to MP920/930, CP-9300MS/9200(H), or PROGIC-8

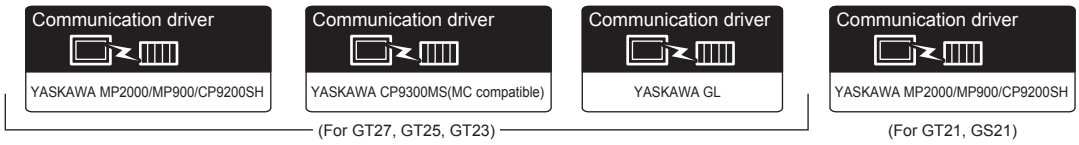

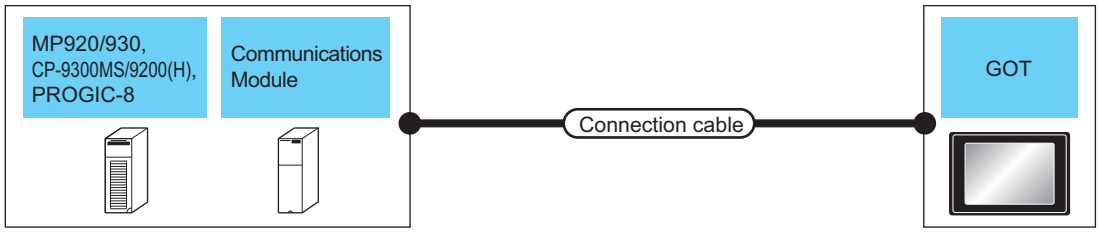

PLC			Connection cable		GOT		Number of connectable equipment
Model name	Communication module	Communication Type	Cable model Connection diagram number	Max. distance	Option device*2	Model	
MP920 MP930	-	RS-232	GT09-C30R20201-9P (3m) or User preparing RS-232 connection diagram 1)	Differs according to PLC side specifications.	- (Built into GOT)	GT27 GT25 GT23 GT21 GT21 GS	1 GOT for 1 PLC
					GT15-RS2-9P	GT27 GT25	
					GT10-C02H-6PT9P*1	GT21 GT21	
			User preparing RS-232 connection diagram 7)	same as above	- (Built into GOT)	GT21 GT21	
CP-9200(H) PROGIC-8 (connecting to port1)	-	RS-232	GT09-C30R20201-9P (3m) or User preparing RS-232 connection diagram 1)	same as above	- (Built into GOT)	GT27 GT25 GT23	
					GT15-RS2-9P	GT27 GT25	

PLC			Connection cable		GOT		Number of connectable equipment
Model name	Communication module	Communication Type	Cable model Connection diagram number	Max. distance	Option device*2	Model	
PROGIC-8 (connecting to port2)	-	RS-232	GT09-C30R20202-15P (3m) or User preparing RS-232 connection diagram 2)	Differs according to PLC side specifications.	- (Built into GOT)	GT27 GT25 GT23	1 GOT for 1 PLC
					GT15-RS2-9P	GT27 GT25	
CP-9300MS (CP-9300MC compatible/ non-compatible)	-	RS-232	GT09-C30R20203-9P (3m) or User preparing RS-232 connection diagram 3)	same as above	- (Built into GOT)	GT27 GT25 GT23	
					GT15-RS2-9P	GT27 GT25	
MP920 (connecting to 217IF)	217IF	RS-232	GT09-C30R20201-9P (3m) or User preparing RS-232 connection diagram 1)	same as above	- (Built into GOT)	GT27 GT25 GT23 GT21 07W GT21 05Q GS	1 GOT for 1 communication module
					GT15-RS2-9P	GT27 GT25	
					GT10-C02H-6PT9P*1	GT21 03P 04P R4 GT21 03P 04P R2	
			User preparing RS-232 connection diagram 7)	same as above	- (Built into GOT)	GT21 04R GT21 03P 04P R2	
		RS-422	User preparing RS-422 connection diagram 2)	same as above	- (Built into GOT)	GT27 GT25 GT23 GT21 07W GT21 05Q GS	
					GT15-RS4-9S	GT27 GT25	
					GT10-C02H-9SC	GT21 04R GT21 03P 04P R4	
			User preparing RS-422 connection diagram 5)	same as above	- (Built into GOT)	GT21 04R GT21 03P 04P BT/R4 GT21 03P 04P R4	

*1 When a GT10-C02H-6PT9P unit of the sub version A or B is used, do not ground the case of the D-sub (9-pin) connector.

*2 GT25-W, GT2505-V does not support the option device.

Connecting to MP940

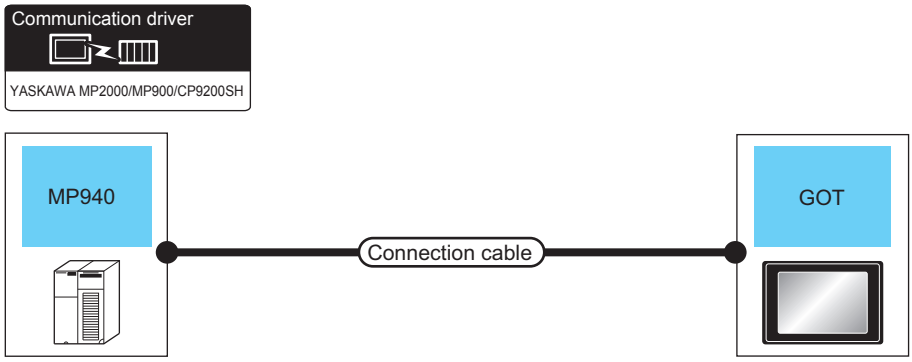

PLC		Connection cable		GOT		Number of connectable equipment
Model name	Communication Type	Cable model Connection diagram number	Max. distance	Option device*2	Model	
MP940	RS-232	GT09-C30R20204-14P (3m) or User preparing RS-232 connection diagram 4)	Differs according to PLC side specifications.	- (Built into GOT)	GT27 GT25 GT23 GT21 GT21 GS	1 GOT for 1 PLC
				GT15-RS2-9P	GT27 GT25	
				GT10-C02H-6PT9P*1	GT21 GT21	
		User preparing RS-232 connection diagram 8)	same as above	- (Built into GOT)	GT21 GT21	
	RS-422	GT09-C30R40202-14P (3m) GT09-C100R40202-14P (10m) GT09-C200R40202-14P (20m) GT09-C300R40202-14P (30m) or User preparing RS-422 connection diagram 3)	300m	- (Built into GOT)	GT27 GT25 GT23 GT21 GT21 GS	
				GT15-RS4-9S	GT27 GT25	
				GT10-C02H-9SC	GT21 GT21	
		User preparing RS-422 connection diagram 6)	Differs according to PLC side specifications.	- (Built into GOT)	GT21 GT21 GT21	

*1 When a GT10-C02H-6PT9P unit of the sub version A or B is used, do not ground the case of the D-sub (9-pin) connector.
*2 GT25-W, GT2505-V does not support the option device.

Connecting to CP-9200SH or CP-317

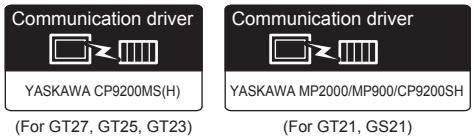

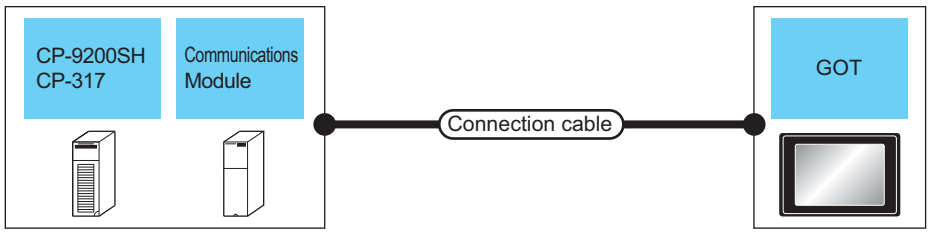

PLC			Connection cable		GOT		Number of connectable equipment
Model name	Communication module*1	Communication Type	Cable model Connection diagram number	Max. distance	Option device*3	Model	
CP-9200SH CP-317	CP-217IF (CN1 connection)	RS-232	GT09-C30R20203-9P(3m) or User preparing RS-232 connection diagram 6)	Differs according to PLC side specifications.	- (Built into GOT)	GT27 GT25 GT23 GT21(07W) GT21(05Q) GS	1 GOT for 1 communication module
					GT15-RS2-9P	GT27 GT25	
					GT10-C02H-6PT9P*2	GT21(03P/04P R4) GT21(03P/04P R2)	
			User preparing RS-232 connection diagram 10)	same as above	- (Built into GOT)	GT21(04R) GT21(03P/04P R2)	
	CP-217IF (CN2 connection)	RS-232	GT09-C30R20205-25P (3m) or User preparing RS-232 connection diagram 5)	same as above	- (Built into GOT)	GT27 GT25 GT23 GT21(07W) GT21(05Q) GS	
					GT15-RS2-9P	GT27 GT25	
					GT10-C02H-6PT9P*2	GT21(03P/04P R4) GT21(03P/04P R2)	
			User preparing RS-232 connection diagram 9)	same as above	- (Built into GOT)	GT21(04R) GT21(03P/04P R2)	

*1 Product manufactured by YASKAWA Electric Corporation. For details of the product, contact YASKAWA Electric Corporation.
*2 When a GT10-C02H-6PT9P unit of the sub version A or B is used, do not ground the case of the D-sub (9-pin) connector.
*3 GT25-W, GT2505-V does not support the option device.

Connecting to MP2200, MP2300, or MP2300S

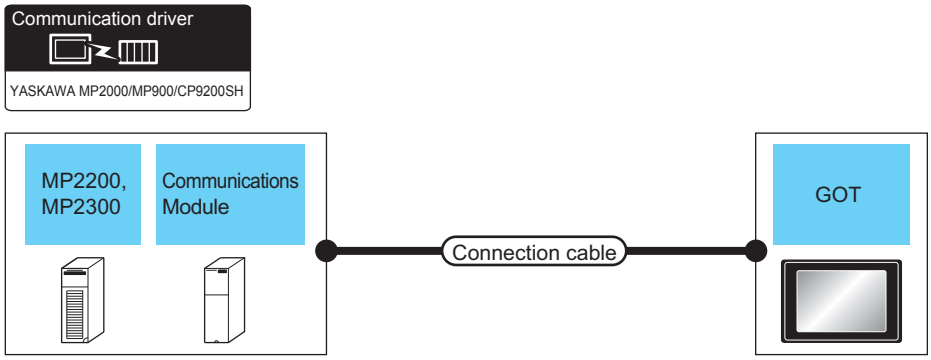

PLC			Connection cable		GOT		Number of connectable equipment
Model name	Communication module*1	Communication Type	Cable model Connection diagram number	Max. distance	Option device*3	Model	
MP2200 MP2300 MP2300S	217IF-01 218IF-01 218IF-02	RS-232	GT09-C30R20201-9P(3m) or User preparing RS-232 connection diagram 1)	Differs according to PLC side specifications.	- (Built into GT)	GT27 GT25 GT23 GT21-07W GT21-05Q GS	1 GT for 1 communication module
					GT15-RS2-9P	GT27 GT25	
					GT10-C02H-6PT9P*2	GT21-03P-04P-R4 GT21-03P-04P-R2	
			User preparing RS-232 connection diagram 7)	same as above	- (Built into GT)	GT21-04R GT21-03P-04P-R2	
	217IF-01	RS-422	User preparing RS-422 connection diagram 4)	same as above	- (Built into GT)	GT27 GT25 GT23 GT21-07W GT21-05Q GS	
					GT15-RS4-9S	GT27 GT25	
					GT10-C02H-9SC	GT21-04R GT21-03P-04P-R2	
			User preparing RS-422 connection diagram 7)	same as above	- (Built into GT)	GT21-04R GT21-03P-04P-ET/R4 GT21-03P-04P-R4	

*1 Product manufactured by YASKAWA Electric Corporation. For details of the product, contact YASKAWA Electric Corporation.
*2 When a GT10-C02H-6PT9P unit of the sub version A or B is used, do not ground the case of the D-sub (9-pin) connector.
*3 GT25-W, GT2505-V does not support the option device.

Connection Diagram

The following diagram shows the connection between the GOT and the PLC.

RS-232 cable

■Connection diagram

• RS-232 connection diagram 1)

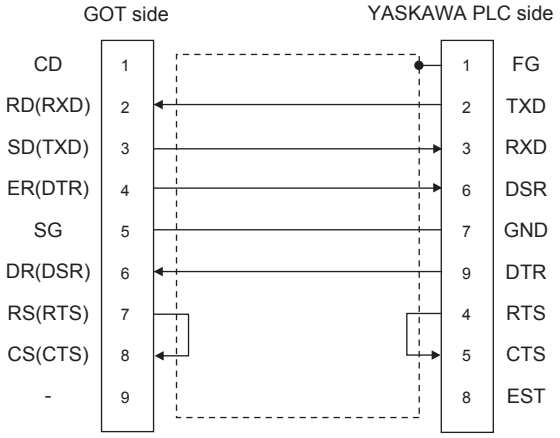

• RS-232 connection diagram 2)

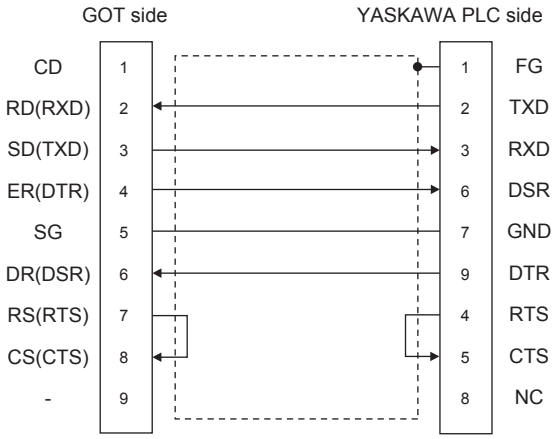

• RS-232 connection diagram 3)

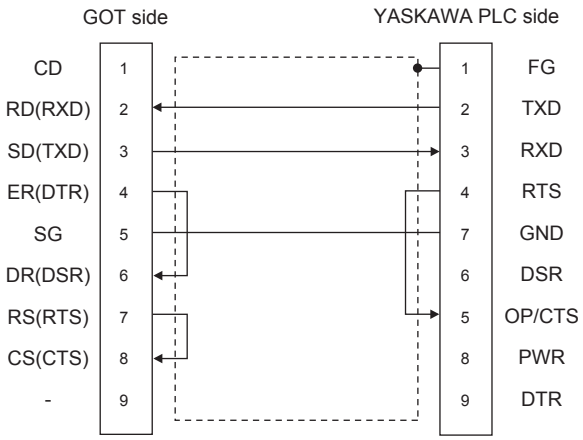

• RS-232 connection diagram 4)

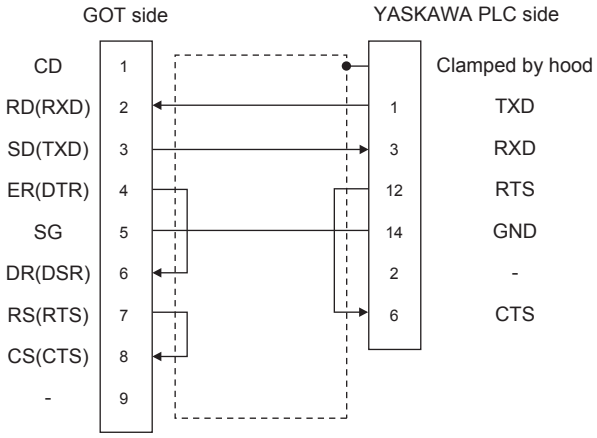

• RS-232 connection diagram 5)

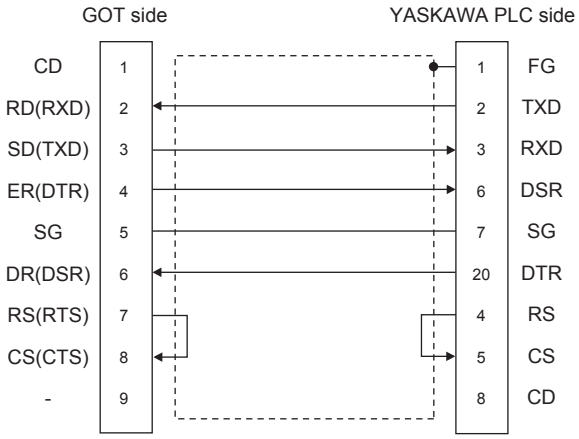

• RS-232 connection diagram 6)

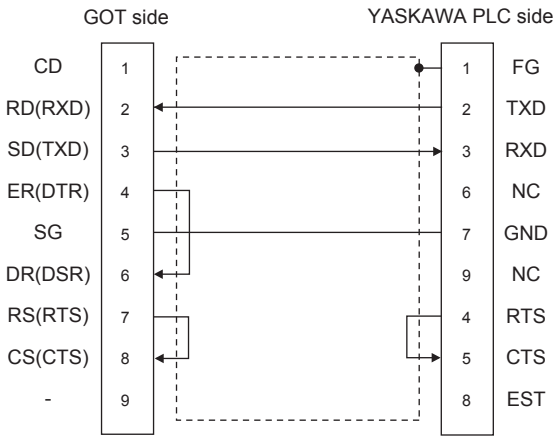

• RS-232 connection diagram 7)

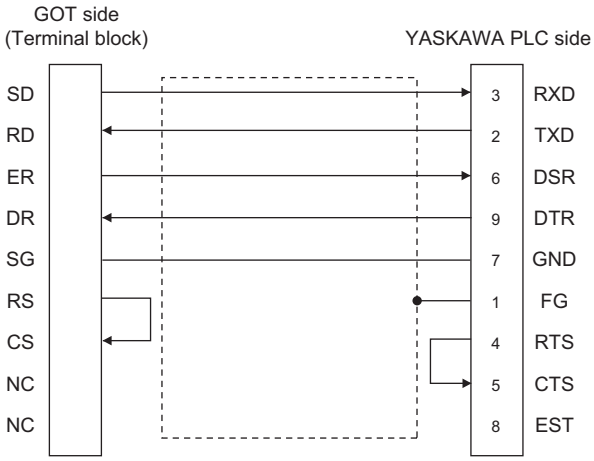

• RS-232 connection diagram 8)

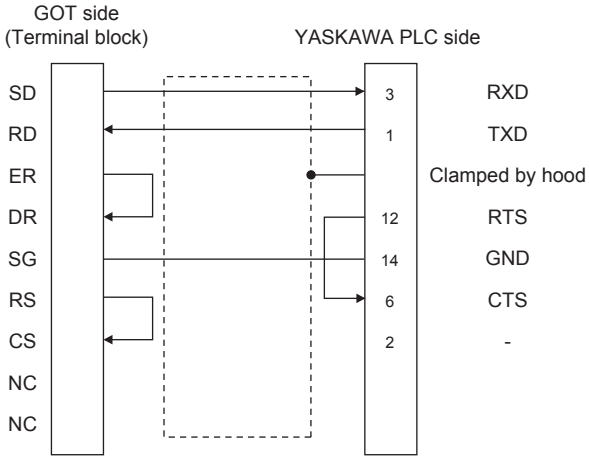

• RS-232 connection diagram 9)

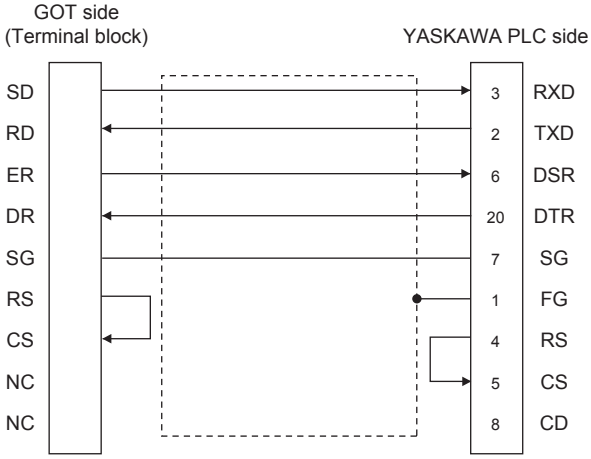

• RS-232 connection diagram 10)

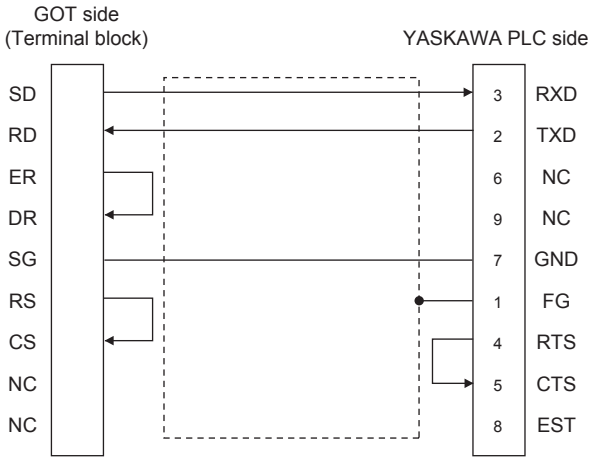

■Precautions when preparing a cable

• Cable length

The maximum length of the RS-232 cable differs according to the specifications of the YASKAWA PLC side.

For details, refer to the YASKAWA PLC user's manual.

• GOT side connector

For the GOT side connector, refer to the following.

☞ Page 58 GOT connector specifications

• YASKAWA PLC side connector

Use the connector compatible with the YASKAWA PLC side module.

For details, refer to the YASKAWA PLC user's manual.

RS-422 cable

■Connection diagram

• RS-422 connection diagram 1)

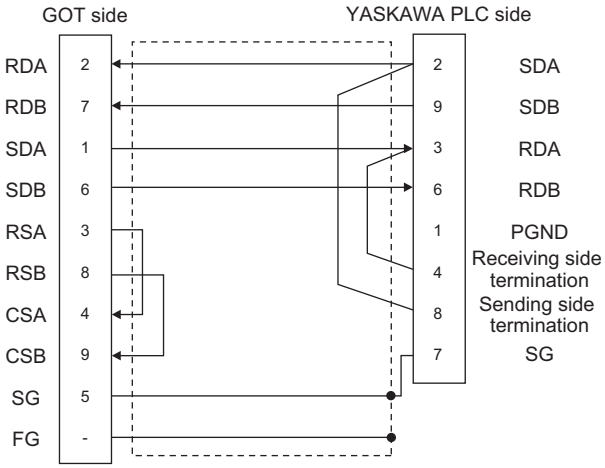

• RS-422 connection diagram 2)

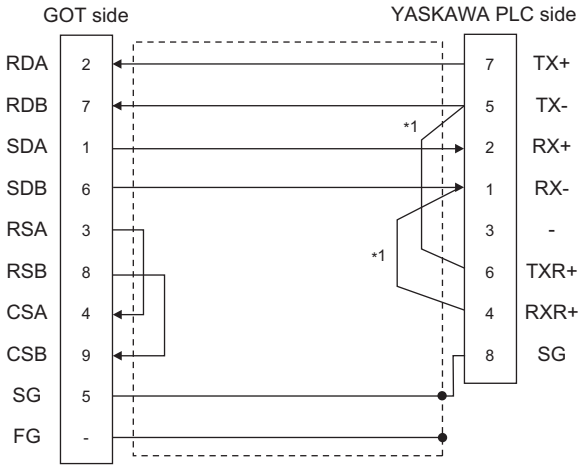

*1 The terminating resistor (120Ω) is valid by connecting pin 1 with pin 4 and pin 5 with pin 6 of the YASKAWA PLC side.

• RS-422 connection diagram 3)

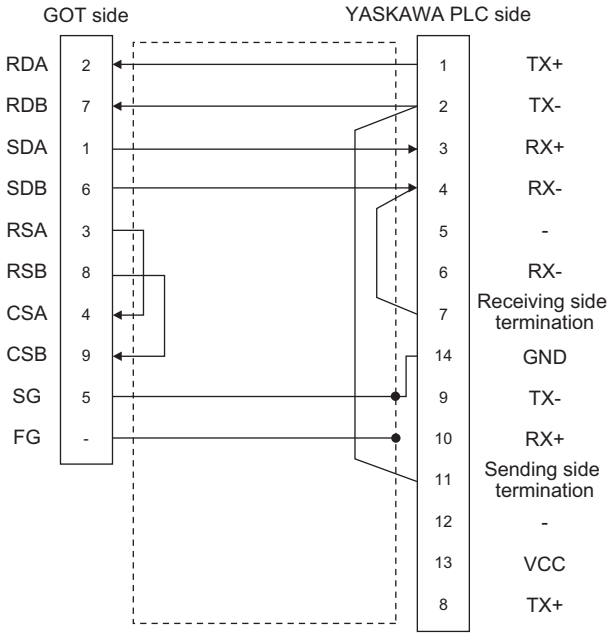

• RS-422 connection diagram 4)

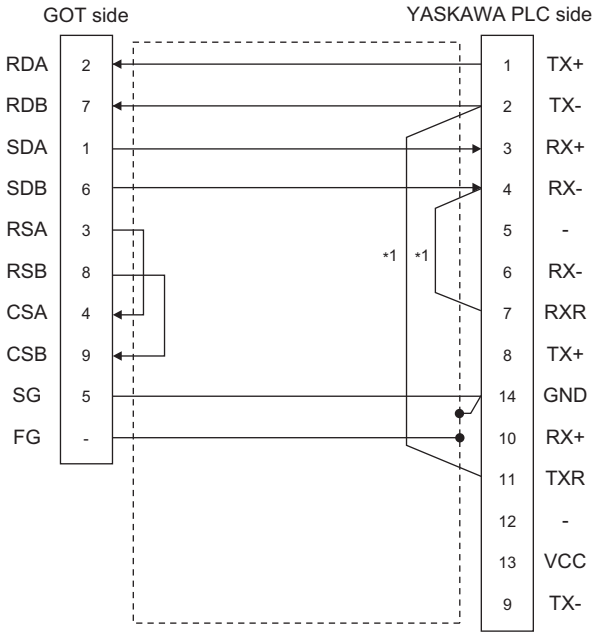

*1 Connect RXR with RX(-) and TXR with TX(-) of 217IF01, and insert the terminating resistor.

• RS-422 connection diagram 5)

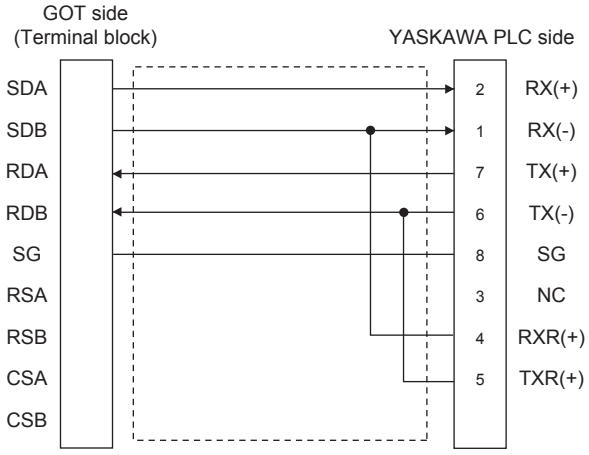

• RS-422 connection diagram 6)

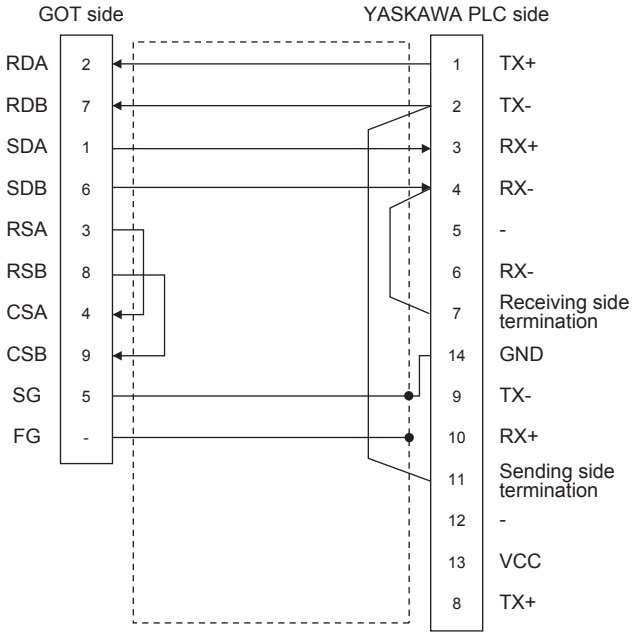

• RS-422 connection diagram 7)

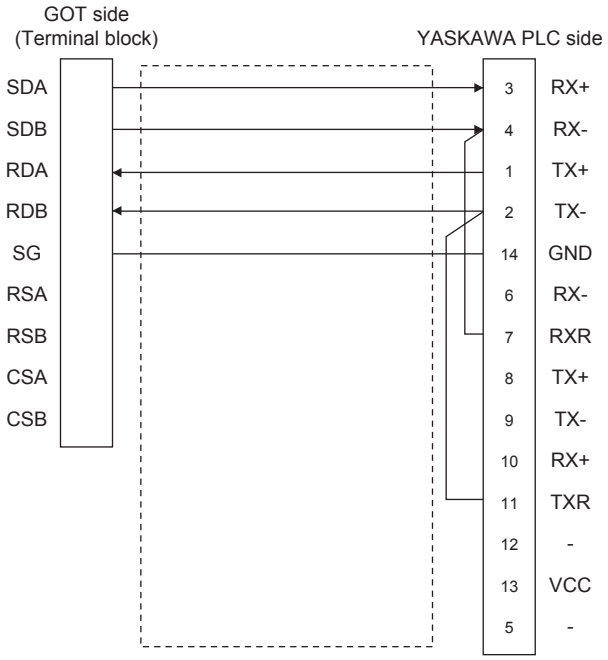

■Precautions when preparing a cable

• Cable length

The length of RS-422 cable 2) must be 300m or less.

The maximum length of RS-422 cable 1) differs according to the specifications of the YASKAWA PLC side.

For details, refer to the YASKAWA PLC user's manual.

• GOT side connector

For the GOT side connector, refer to the following.

☞ Page 58 GOT connector specifications

• YASKAWA PLC side connector

Use the connector compatible with the YASKAWA PLC side module.

For details, refer to the YASKAWA PLC user's manual.

■Connecting terminating resistors

• GOT side

When connecting a PLC to the GOT, a terminating resistor must be connected to the GOT.

For GT27, GT25(Except GT2505-V), GT23

Set the terminating resistor setting switch of the GOT main unit to disable.

For GT2505-V, GT21, and GS21-W-N

Set the terminating resistor selector to 330 Ω.

For GS21-W

Since the terminating resistor is fixed to 330 Ω, no setting is required for the terminating resistor.

For the procedure to set the terminating resistor, refer to the following.

☞ Page 62 Terminating resistors of GOT

• YASKAWA PLC side

When connecting a YASKAWA PLC to a GOT, connect a terminating resistor to the YASKAWA PLC if required.

📖YASKAWA PLC user's Manual

Setting communication interface (Communication settings)

Set the channel of the connected equipment.

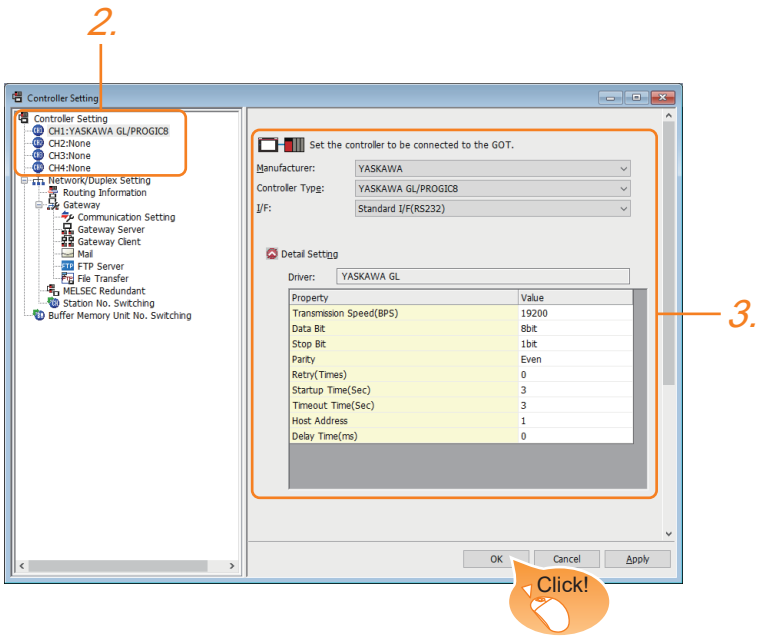

1. Select [Common] → [Controller Setting] from the menu.

2. In the [Controller Setting] window, select the channel No. to be used from the list menu.

3. Set the following items.

- [Manufacturer]: [YASKAWA]
- [Controller Type]: Select one of the following items.

<For GT27, GT25, and GT23>

[YASKAWA GL/PROGIC8]

[YASKAWA CP9200(H)]

[YASKAWA CP9300MS(MC compatible)]

[YASKAWA MP2000/MP900/CP9200SH]

<For GT21, GS21>

[YASKAWA MP2000/MP900/CP9200SH]

- [I/F]: Interface to be used
- [Detail Setting]: Configure the settings according to the usage environment.

☞ Page 204 Communication detail settings

4. When you have completed the settings, click the [OK] button.

Point

The settings of connecting equipment can be confirmed in [I/F Communication Setting].
For details, refer to the following.

☞ Page 48 I/F communication setting

Communication detail settings

Make the settings according to the usage environment.

(For GT27, GT25, GT23)

Property	Value
Transmission Speed(BPS)	19200
Data Bit	8 bit
Stop Bit	1 bit
Parity	Even
Retry(Times)	0
Startup Time(Sec)	3
Timeout Time(Sec)	3
Host Address	1
Delay Time(ms)	0

Item	Description	Range
Transmission Speed	Set this item when change the transmission speed used for communication with the connected equipment. (Default: 19200bps)	4800bps, 9600bps, 19200bps, 38400bps, 57600bps
Data Bit	Set this item when change the data length used for communication with the connected equipment. (Default: 8bit)	8bit (fixed)
Stop Bit	Specify the stop bit length for communications. (Default: 1bit)	1bit (fixed)
Parity	Specify whether or not to perform a parity check, and how it is performed during communication. (Default: Even)	Even (fixed)
Retry	Set the number of retries to be performed when a communication error occurs. (Default: 0time)	0 to 5times
Startup Time	Specify the time period from the GOT startup until GOT starts the communication with the PLC CPU. (Default: 3sec)	3 to 30sec
Timeout Time	Set the time period for a communication to time out. (Default: 3sec)	1 to 30sec
Host Address	Specify the host address (station No. of the PLC to which the GOT is connected) in the network of the GOT. (Default: 1)	1 to 31
Delay Time	Set this item to adjust the transmission timing of the communication request from the GOT. (Default: 0ms)	0 to 300 (ms)

(For GT21, GS21)

Property	Value
Transmission Speed(BPS)	19200
Data Bit	8bit
Stop Bit	1bit
Parity	Even
Retry(Times)	0
Startup Time(Sec)	3
Timeout Time(Sec)	3
Host Address	1
Delay Time(ms)	0
32bit Storage	Auto

Item	Description	Range
Transmission Speed	Set this item when change the transmission speed used for communication with the connected equipment. (Default: 19200bps)	4800bps, 9600bps, 19200bps, 38400bps, 57600bps
Data Bit	Set this item when change the data length used for communication with the connected equipment. (Default: 8bit)	8bit (fixed)
Stop Bit	Specify the stop bit length for communications. (Default: 1bit)	1bit (fixed)
Parity	Specify whether or not to perform a parity check, and how it is performed during communication. (Default: Even)	Even (fixed)
Retry	Set the number of retries to be performed when a communication error occurs. (Default: 0time)	0 to 5times
Startup Time	Specify the time period from the GOT startup until GOT starts the communication with the PLC CPU. (Default: 3sec)	3 to 30sec
Timeout Time	Set the time period for a communication to time out. (Default: 3sec)	1 to 30sec
Host Address	Specify the host address (station No. of the PLC to which the GOT is connected) in the network of the GOT. (Default: 1)	1 to 31
Delay Time	Set this item to adjust the transmission timing of the communication request from the GOT. (Default: 0ms)	0 to 300 (ms)
32 bit Storage	Select the steps to store two words (32-bit data). (Default: Auto)	LH Order/ HL Order/ Auto

Point

• Delay Time

When connecting to PLC CP-9200(H) and CP-9300MS, set the following.

Model name		Delay Time
CP-9200(H)		30ms or more
CP-9300MS	port:0	10ms or more
	port:1	30ms or more

• Communication interface setting by the Utility

The communication interface setting can be changed on the Utility's [Communication setting] after writing [Communication Settings] of project data.

For details on the Utility, refer to the following manual.

GOT2000 Series User's Manual (Utility)

• Precedence in communication settings

When settings are made by GT Designer3 or the Utility, the latest setting is effective.

PLC Side Settings

Point

YASKAWA PLC

For details of YASKAWA PLCs, refer to the following manuals.

YASKAWA PLC user's Manual

Communication and port settings

Make the communication and port settings with a peripheral tool.

Device name	Set value
Address*1	1 to 31
Protocol	MEMOBUS
Mode	RTU
Transmission speed*2*3	4800bps, 9600bps, 19200bps, 38400bps, 57600bps
Data bit	8bits
Stop bit	1bit
Parity bit	Even
Error check	CRC16

*1 Set the address according to the Host Address setting on the GOT side.
For the Host Address setting on the GOT side, refer to the following.
Page 204 Communication detail settings

*2 Only transmission speeds available on the GOT side are shown.
Also, the setting range differs depending on the YASKAWA PLC model.

*3 The transmission speed setting must be consistent with that of the GOT side.
For the transmission speed setting on the GOT side, refer to the following.
Page 204 Communication detail settings

Sequence program

To communicate the MP2000 series with the GOT2000 series, the ladder program to receive messages is required.

The following shows an example ladder program for MP2000 series.

ladder program to receive messages

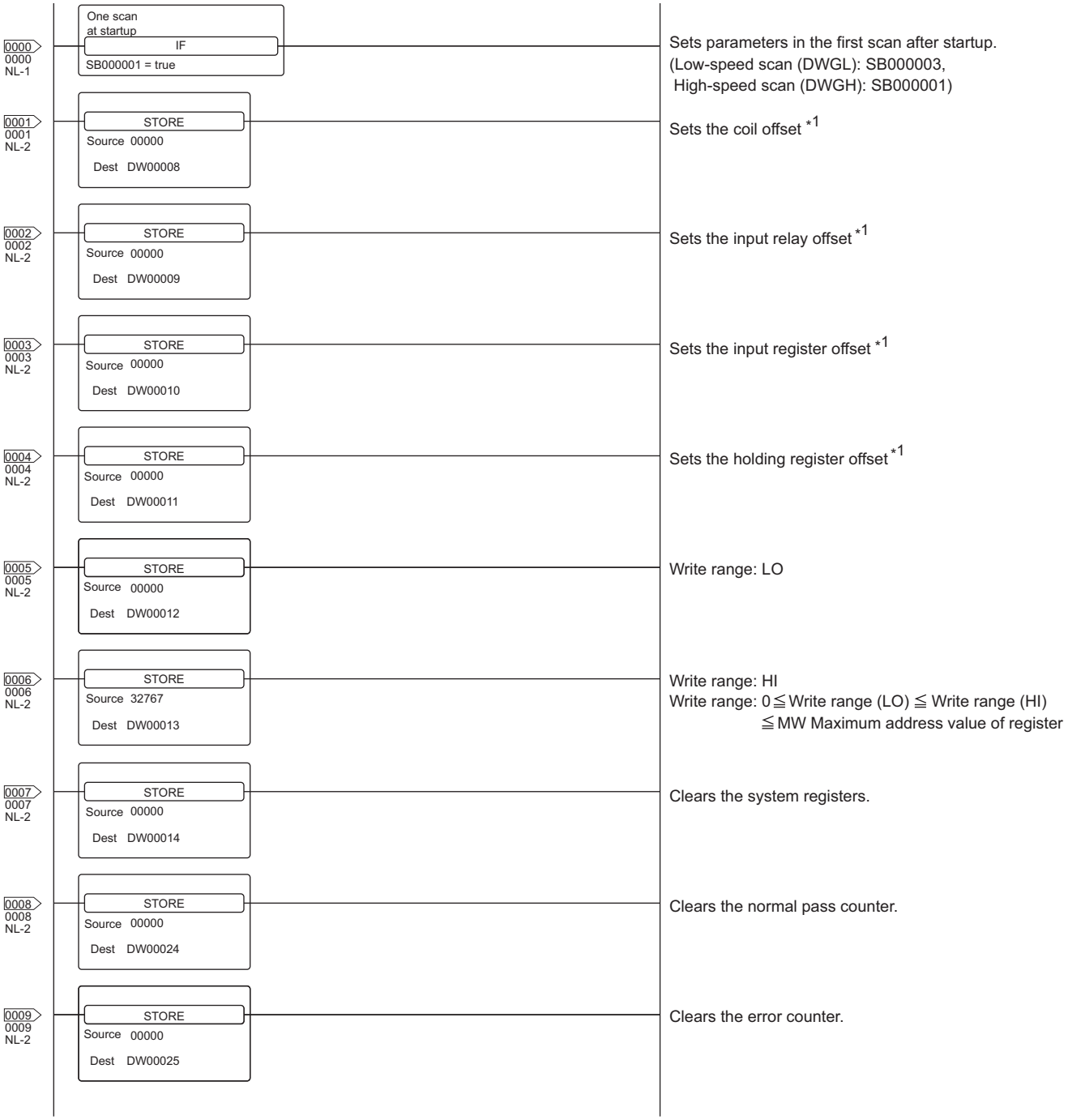

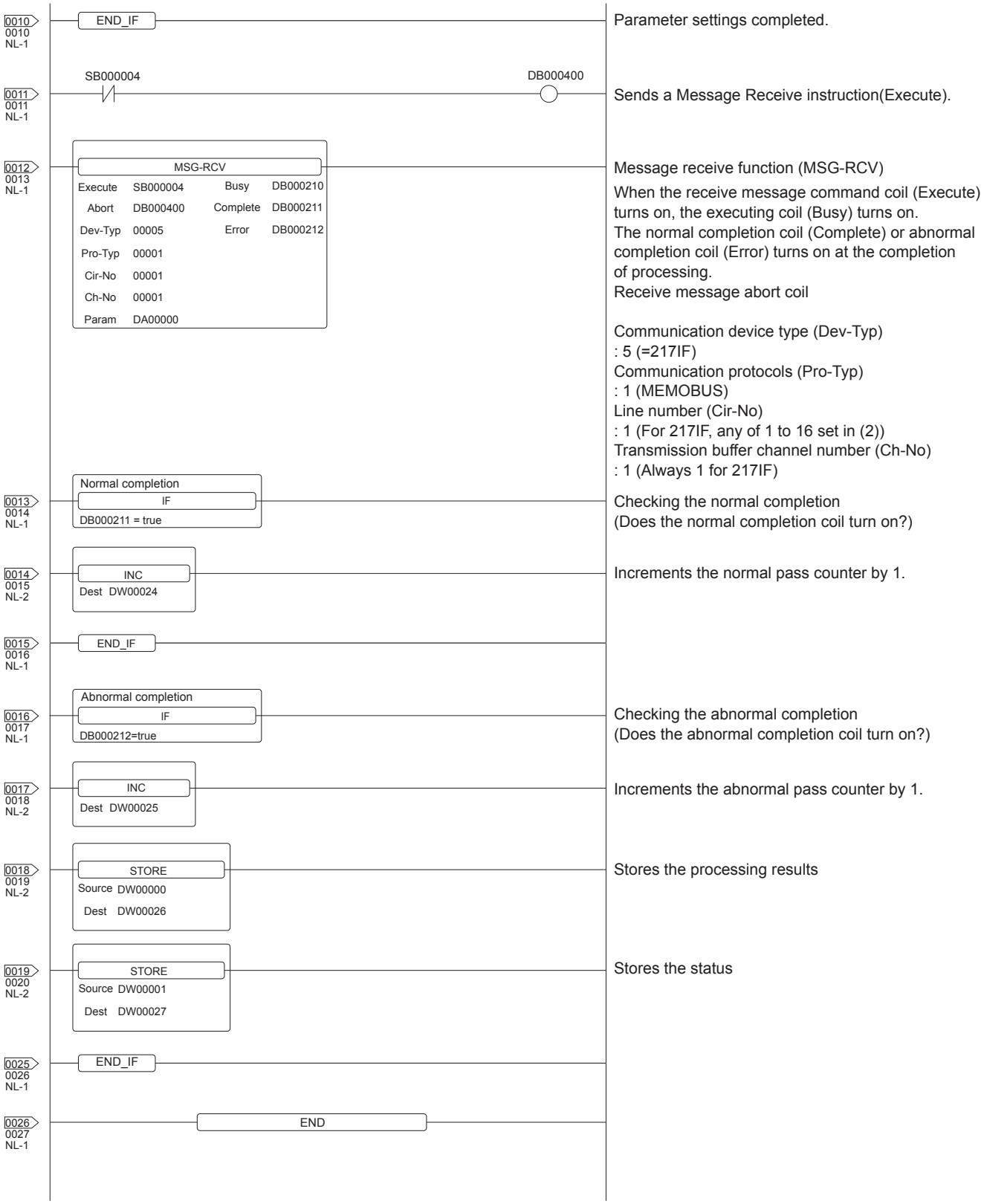

*1 Set 0 to the PARAM08 to 11 of the MSG_RCV (input relay, input register, coil, holding register offset). (Do not make the offset settings.) When the offset is needed, set [Option] → [Offset] to each object or make a setting added the offset value to the device.

6.3 Ethernet Connection

Connecting to MP920, MP2200, MP2300, or MP2300S

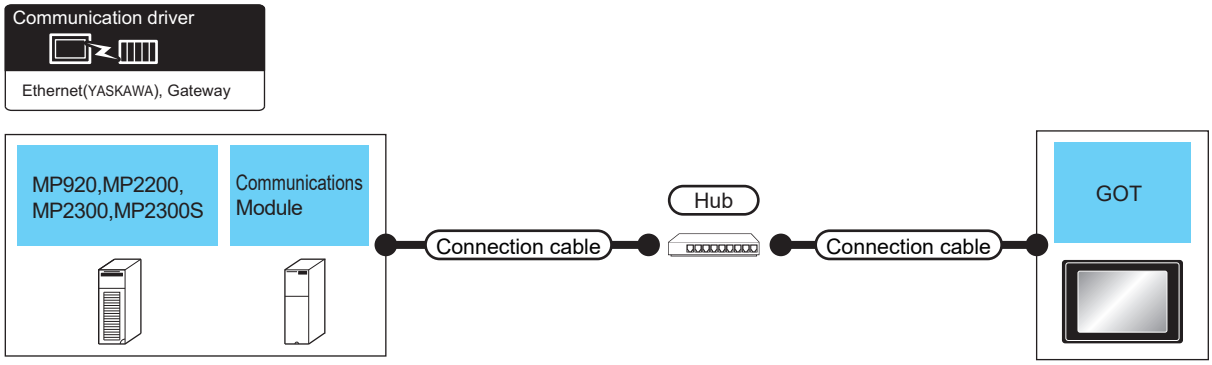

PLC		Connection cable		GOT		Number of connectable equipment
Model name	Communication module[*3]	Cable model[*1]	Maximum segment length[*2]	Option device[*4]	Model	
MP920	218IF	• 100BASE-TX Shielded twisted pair cable (STP) or unshielded twisted pair cable (UTP) of category 5 or higher • 10BASE-T Shielded twisted pair cable (STP) or unshielded twisted pair cable (UTP) of category 3 or higher	100m	- (Built into GOT)	GT27 GT25 GT23 GT21 GT21 GT21 GS	When PLC (module):GOT is N:1 The following shows the number of PLCs for 1 GOT <For GT27, GT25> TCP: 128 or less UDP: 128 or less <For GT21, GS21> TCP : 4 or less UDP : 4 or less When PLC (module):GOT is 1:N The following shows the number of GOTs for 1 PLC (module) TCP/UDP: 10 or less
				GT25-J71E71-100	GT27 GT25	
MP2200 MP2300	218IF-01 218IF-02		100m	- (Built into GOT)	GT27 GT25 GT23 GT21 GT21 GT21 GS	
				GT25-J71E71-100	GT27 GT25	
MP2300S	218IF-01 218IF-02		100m	- (Built into GOT)	GT27 GT25 GT23 GT21 GT21 GT21 GS	
				GT25-J71E71-100	GT27 GT25	
	—		100m	- (Built into GOT)	GT27 GT25 GT23 GT21 GT21 GT21 GS	
				GT25-J71E71-100	GT27 GT25	

*1 The destination connected with the twisted pair cable varies with the configuration of the applicable Ethernet network system.
Connect to the Ethernet module, hub, transceiver or other system equipment corresponding to the applicable Ethernet network system.
Use cables, connectors, and hubs that meet the IEEE802.3 10BASE-T/100BASE-TX standards.
To connect the target device and hub, use a cable according to the target device configuration.

*2 A length between a hub and a node.
The maximum distance differs depending on the Ethernet device to be used.
The following shows the number of the connectable nodes when a repeater hub is used.
• 10BASE-T: Max. 4 nodes for a cascade connection (500m)
• 100BASE-TX: Max. 2 nodes for a cascade connection (205m)
When switching hubs are used, the cascade connection between the switching hubs has no logical limit for the number of cascades.
For the limit, contact the switching hub manufacturer.

*3 Product manufactured by YASKAWA Electric Corporation. For details of the product, contact YASKAWA Electric Corporation.

*4 GT25-W, GT2505-V does not support the option device.

Connecting to CP-9200SH, CP-312, or CP-317

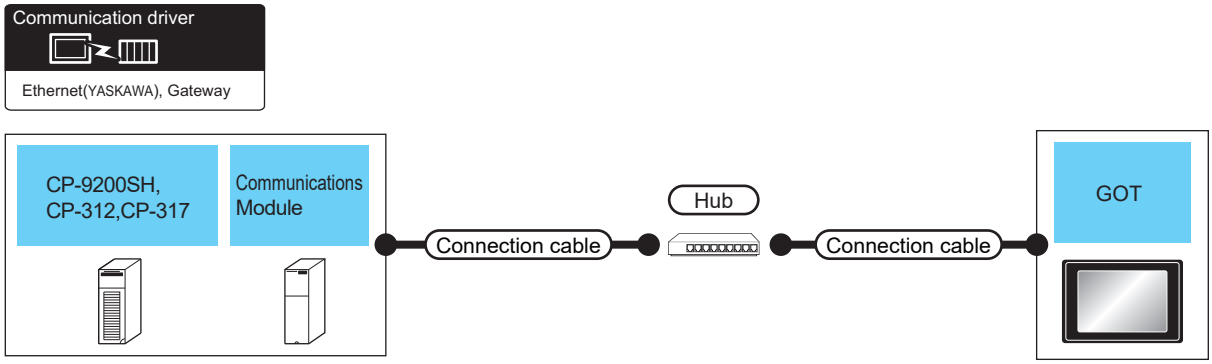

PLC		Connection cable		GOT		Number of connectable equipment
Model name	Communication module*3	Cable model*1	Maximum segment length*2	Option device*4	Model	
CP-9200SH CP-312	CP-218IF	• 100BASE-TX Shielded twisted pair cable (STP) or unshielded twisted pair cable (UTP) of category 5 or higher • 10BASE-T Shielded twisted pair cable (STP) or unshielded twisted pair cable (UTP) of category 3 or higher	100m	- (Built into GOT)	GT27 GT25 GT23 GT21 GT21 GT21 GS	When PLC (module):GOT is N:1 The following shows the number of PLCs for 1 GOT <For GT27, GT25> TCP: 128 or less UDP: 128 or less <For GT21, GS21> TCP : 4 or less UDP : 4 or less When PLC (module):GOT is 1:N The following shows the number of GOTs for 1 PLC (module) TCP/UDP: 10 or less
				GT25-J71E71-100	GT27 GT25	
CP-317	218TXB		100m	- (Built into GOT)	GT27 GT25 GT23 GT21 GT21 GT21 GS	
				GT25-J71E71-100	GT27 GT25	

*1 The destination connected with the twisted pair cable varies with the configuration of the applicable Ethernet network system.
Connect to the Ethernet module, hub, transceiver or other system equipment corresponding to the applicable Ethernet network system.
Use cables, connectors, and hubs that meet the IEEE802.3 10BASE-T/100BASE-TX standards.
To connect the target device and hub, use a cable according to the target device configuration.

*2 A length between a hub and a node.
The maximum distance differs depending on the Ethernet device to be used.
The following shows the number of the connectable nodes when a repeater hub is used.
• 10BASE-T: Max. 4 nodes for a cascade connection (500m)
• 100BASE-TX: Max. 2 nodes for a cascade connection (205m)
When switching hubs are used, the cascade connection between the switching hubs has no logical limit for the number of cascades.
For the limit, contact the switching hub manufacturer.

*3 Product manufactured by YASKAWA Electric Corporation. For details of the product, contact YASKAWA Electric Corporation.

*4 GT25-W, GT2505-V does not support the option device.

Connecting to MP3200 or MP3300

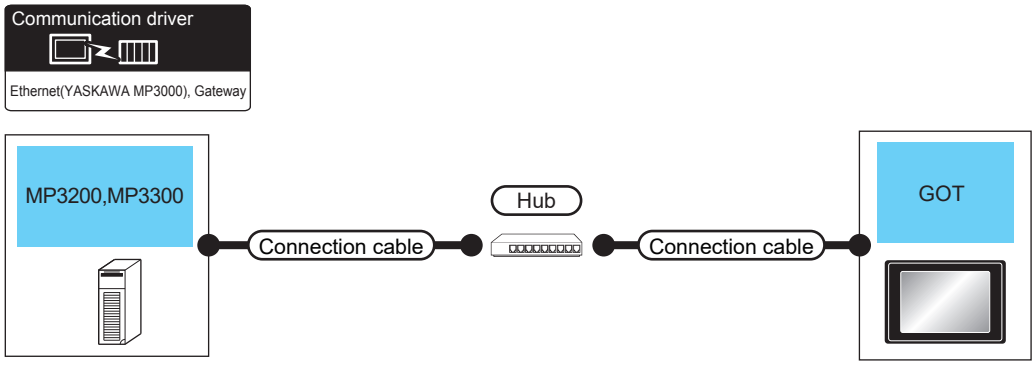

PLC	Connection cable		GOT		Number of connectable equipment
Model name	Cable model*1	Maximum segment length*2	Option device*3	Model	
MP3200 MP3300	• 100BASE-TX Shielded twisted pair cable (STP) or unshielded twisted pair cable (UTP) of category 5 or higher • 10BASE-T Shielded twisted pair cable (STP) or unshielded twisted pair cable (UTP) of category 3 or higher	100m	- (Built into GOT)	GT27 GT25 GT23 GT21 GT21 GT21 GS	When PLC (module):GOT is N:1 The following shows the number of PLCs for 1 GOT <For GT27, GT25> TCP: 128 or less UDP: 128 or less <For GT21, GS21> TCP:4 or less UDP:4 or less When PLC (module):GOT is 1:N The following shows the number of GOTs for 1 PLC (module) TCP/UDP: 10 or less
			GT25-J71E71-100	GT27 GT25	

*1 The destination connected with the twisted pair cable varies with the configuration of the applicable Ethernet network system.
Connect to the Ethernet module, hub, transceiver or other system equipment corresponding to the applicable Ethernet network system.
Use cables, connectors, and hubs that meet the IEEE802.3 10BASE-T/100BASE-TX standards.
To connect the target device and hub, use a cable according to the target device configuration.

*2 A length between a hub and a node.
The maximum distance differs depending on the Ethernet device to be used.
The following shows the number of the connectable nodes when a repeater hub is used.
• 10BASE-T: Max. 4 nodes for a cascade connection (500m)
• 100BASE-TX: Max. 2 nodes for a cascade connection (205m)
When switching hubs are used, the cascade connection between the switching hubs has no logical limit for the number of cascades.
For the limit, contact the switching hub manufacturer.

*3 GT25-W, GT2505-V does not support the option device.

GOT Side Settings

Setting communication interface (Communication settings)

Set the channel of the connected equipment.

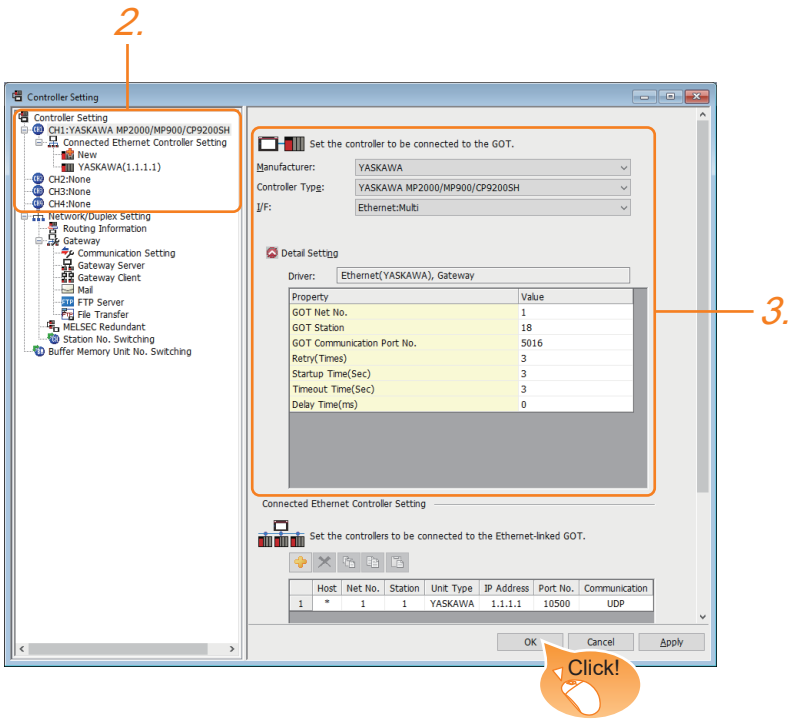

1. Select [Common] → [Controller Setting] from the menu.
2. In the [Controller Setting] window, select the channel No. to be used from the list menu.
3. Set the following items.

- [Manufacturer]: [YASKAWA]
- [Controller Type]: Select one of the following items according to the controller to be connected.

[YASKAWA MP2000/MP900/CP9200SH]
[YASKAWA MP3000]

- [I/F]: [Ethernet:Multi]
- [Detail Setting]: Configure the settings according to the usage environment.

☞ Page 214 Communication detail settings

4. When you have completed the settings, click the [OK] button.

Point

The settings of connecting equipment can be confirmed in [I/F Communication Setting].
For details, refer to the following.
☞ Page 48 I/F communication setting

Communication detail settings

Make the settings according to the usage environment.

Property	Value
GOT Net No.	1
GOT Station	18
GOT Communication Port No.	5016
Retry(Times)	3
Startup Time(Sec)	3
Timeout Time(Sec)	3
Delay Time(ms)	0

Item	Description	Range
GOT Net No.	Set the network No. of the GOT. (Default: 1)	1 to 239
GOT Station*1	Set the station No. of the GOT. (Default: 18)	1 to 64
GOT Communication Port No.	Set the GOT port No. for the connection with the Ethernet equipment. (Default: 5016*2)	1024 to 5010, 5014 to 49152, 49171 to 65534
Retry	Set the number of retries to be performed when a communication timeout occurs. When receiving no response after retries, the communication times out. (Default: 3times)	0 to 5times
Startup Time	Specify the time period from the GOT startup until GOT starts the communication with the PLC CPU. (Default: 3sec)	3 to 255sec
Timeout Time	Set the time period for a communication to time out. (Default: 3sec)	1 to 90sec
Delay Time	Set the delay time for reducing the load of the network/destination PLC. (Default: 0ms)	0 to 10000(10ms)

*1 Set different values for [GOT Station] of [Detail Setting] and [Station] of [Connected Ethernet Controller Setting].
☞ Page 215 Connected Ethernet Controller Setting

*2 When assigning the same driver to the multiple channels, in the communication drivers set as the second and following, the default value of [GOT Communication Port No.] becomes the earliest number in the vacant numbers of No. 6000 and later.

Point

• Communication interface setting by the Utility

The communication interface setting can be changed on the Utility's [Communication setting] after writing [Communication Settings] of project data.

For details on the Utility, refer to the following manual.

GOT2000 Series User's Manual (Utility)

• Precedence in communication settings

When settings are made by GT Designer3 or the Utility, the latest setting is effective.

GOT Ethernet Setting

The GOT can be connected to a different network by configuring the following setting.

■GOT IP address setting

Set the following communication port setting.

- Standard port (When using GT25-W, port 1)
- Extension port (When using GT25-W, port 2)

■GOT Ethernet common setting

Set the following setting which is common to the standard port and the extension port, or port 1 and port 2.

- [Default Gateway]
- [Peripheral S/W Communication Port No.]
- [Transparent Port No.]

■IP filter setting

By configuring the IP filter setting, the access from the specific IP address can be permitted or shut off.

For the detailed settings, refer to the following manual.

☞ Page 44 GOT Ethernet Setting

Connected Ethernet Controller Setting

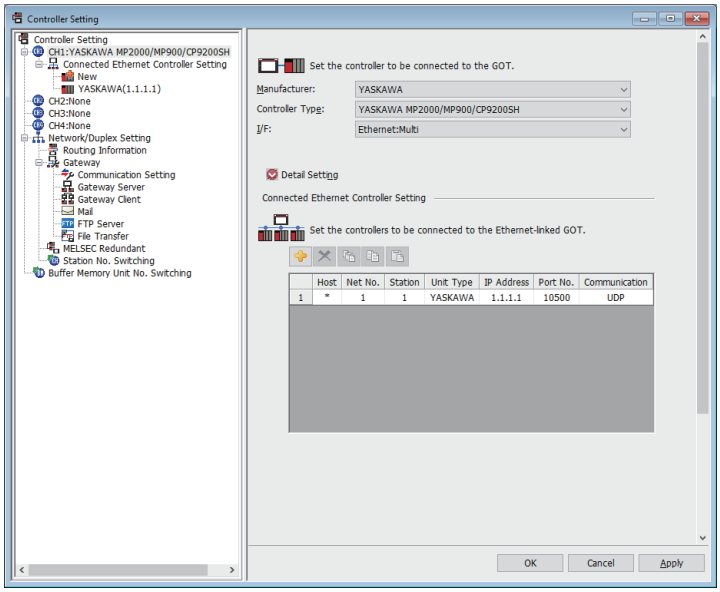

Item	Description	Set value
Host	The host is displayed. It refers to a station that can be connected without setting a station number. (The host is indicated with an asterisk (*).)	—
Net No.	Set the network No. of the connected Ethernet equipment. (Default: 1)	1 to 239
Station *2	Set the station No. of the connected Ethernet equipment. (Default: 1)	1 to 64
Unit Type	YASKAWA (fixed)	YASKAWA (fixed)
IP address *1	Set the IP address of the connected Ethernet equipment. (Default: 1.1.1.1)	PLC side IP address
Port No.	Set the port No. of the connected Ethernet equipment. (Default: 10500)	256 to 65534
Communication format	Select a communication protocol. (Default: UDP)	UDP, TCP

*1 Connection with the PLC is unavailable if the IP address is the default value. Set the value to the IP address of the PLC to be connected.

*2 Set different values for [GOT Station] of [Detail Setting] and [Station] of [Connected Ethernet Controller Setting].

☞ Page 214 Communication detail settings

Point

[Connected Ethernet Controller Setting] for GT21 and GS21

• Effective range of [Connected Ethernet Controller Setting]

Only [1] to [4] of [Connected Ethernet Controller Setting] can be used for GT21 and GS21.

If [5] onwards are used, the settings are invalid on GT21 and GS21.

• [Host] setting

Set [Host] within the range from [1] to [4] in [Connected Ethernet Controller Setting].

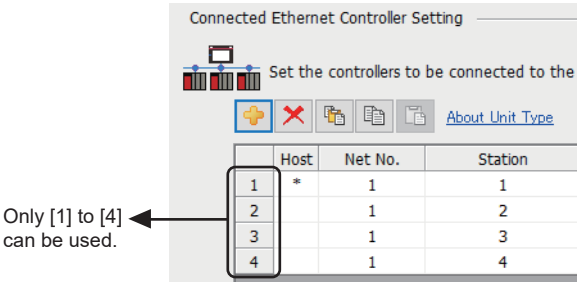

PLC side setting (MP2000 or MP920 series)

Point

YASKAWA PLC

For details of YASKAWA PLCs, refer to the following manuals.

YASKAWA PLC user's Manual

Parameter settings

Make the parameter settings with a peripheral tool.

■Settings for 218IF-01

Item		Set value	Range
Parameter setting	Local IP Address	[ ].[ ].[ ].[ ]	PLC side IP address
	Response Time	0	Not required for communication with GOT
	Count of Retry (Number of Retries)	0	Not required for communication with GOT
	CNO *1 (Connection Number)	1	1 to 20
	Local Port (Local Station's Port Number)	10500	256 to 65534
	Node IP Address (Remote Station's IP Address)*2	[ ].[ ].[ ].[ ]	IP address of GOT
	Node Port (Remote Station's Port Number)*2	[ ]	Port No. of GOT
	Connection Type	UDP (recommended)	UDP/TCP
	Protocol Type	Extended MEMOBUS	Extended MEMOBUS, MEMOBUS, MELSEC, None, MODBUS/TCP
	Code	BIN	RTU, BIN, ACII
	Node Name (Remote Station's Name)	GOT2000	Name of GOT
Local Port: TCP/IP Setting	Subnet Mask	[ ].[ ].[ ].[ ]	PLC side setting
	Gateway IP Address	[ ].[ ].[ ].[ ]	
	System Port No. (Diagnostic/Engineering Port No.)	10000	
	TCP (Transmission Control Protocol) Zero Window Timer Value	3 sec	
	TCP Retry Time	500ms	
	TCP Close Time	60 sec	
	IP Assemble Time	30 sec	
	MAX. Packet Length	1500 bytes	

*1 When MITSUBISHI ELECTRIC PLC and YASKAWA PLC are used together in the same network, do not set the same value for the Station of MITSUBISHI ELECTRIC PLC and the CNO (Connection number) of YASKAWA PLC.

*2 Set the same the Node IP Address (Remote Station's IP Address) and the Node Port (Remote Station's Port Number) as the Local IP Address and the Local Port (Local Station's Port Number) on the GOT side.
For the Local IP Address and the Local Port (Local Station's Port Number) on the GOT side, refer to the following.
☞ Page 215 Connected Ethernet Controller Setting

■Setting for the built-in MP2300S Ethernet and 218IF-02

Item		Set value	Range
Transmission parameter setting	IP Address	[ ].[ ].[ ].[ ]	PLC side IP address
	Subnet Mask	[ ].[ ].[ ].[ ]	PLC side setting
	Gateway IP Address	[ ].[ ].[ ].[ ]	
	Device name	Arbitrary	Up to 16 one-byte characters
Transmission parameter detailed setting	Engineering Port	256 to 65535	For a connection with software MPE720
	Response Time	0	Not required for communication with GOT
	Count of Retry (Number of Retries)	0	
Message communication of connection parameter setting	Connection Number	1	• Range of built-in MP2300S Ethernet: 1 to 4 • Range of 218IF-02: 1 to 20
	Local Port	10500	256 to 65534
	Node IP Address*1	[ ].[ ].[ ].[ ]	IP address of GOT
	Node Port *1	[ ]	Port No. of GOT
	Connection Type	UDP (recommended)	TCP/UDP
	Protocol Type	Extended MEMOBUS	Extended MEMOBUS, MEMOBUS, MELSEC, None, MODBUS/TCP
	Code	BIN	RTU, BIN, ACII
	Node Name	Arbitrary	Up to 32 one-byte characters (16 two-byte characters)

*1 Set the same the Node IP Address (Remote Station's IP Address) and the Node Port (Remote Station's Port Number) as the Local IP Address and the Local Port (Local Station's Port Number) on the GOT side.
For the Local IP Address and the Local Port (Local Station's Port Number) on the GOT side, refer to the following.
☞ Page 215 Connected Ethernet Controller Setting

Sequence program

To communicate the MP2000 series or MP920 series with the GOT2000 series, the ladder program to receive messages is required. When connecting the MP2000 series or MP920 series with multiple GOTs, ladder programs to receive messages for each GOT are required.

ladder program to receive messages

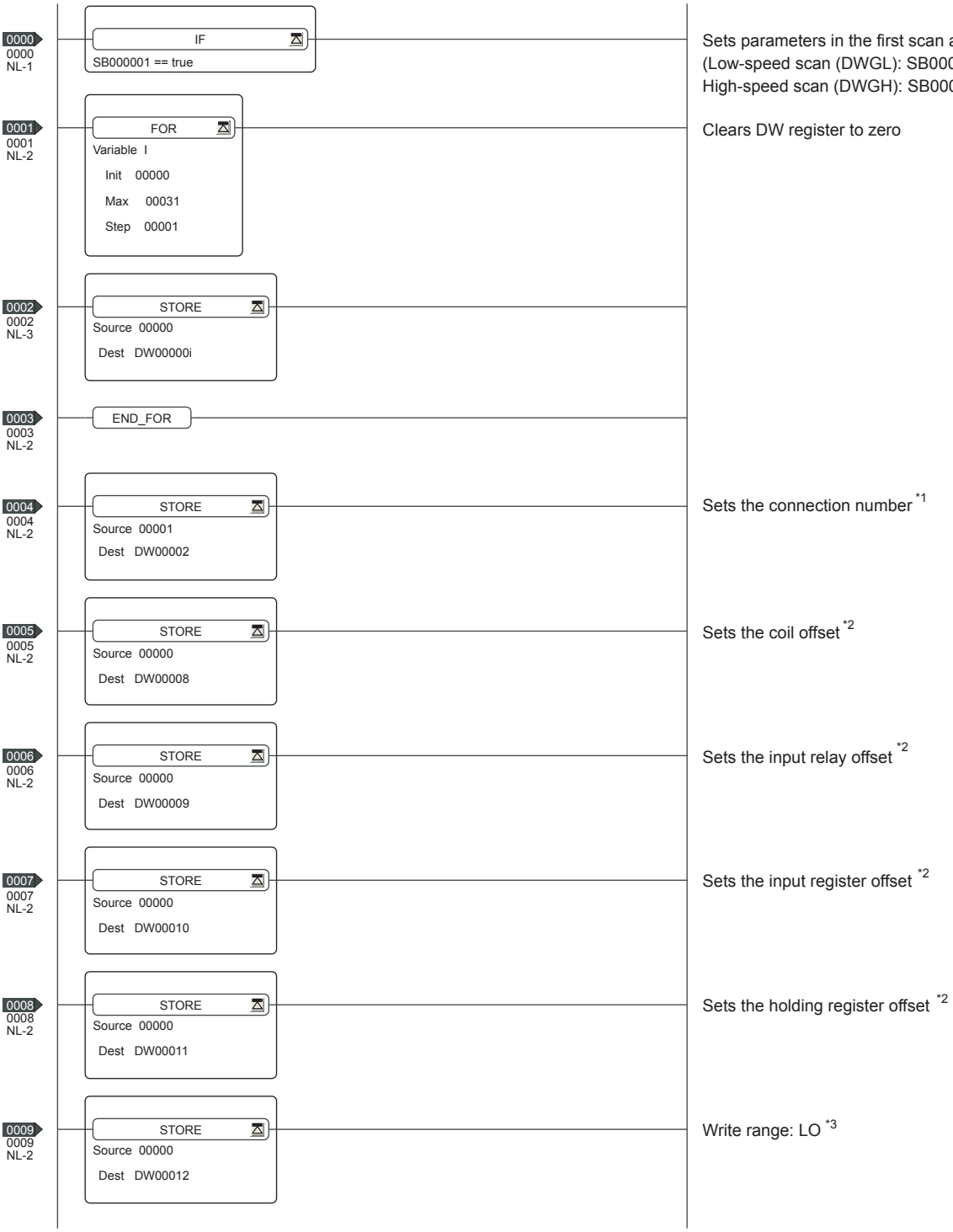

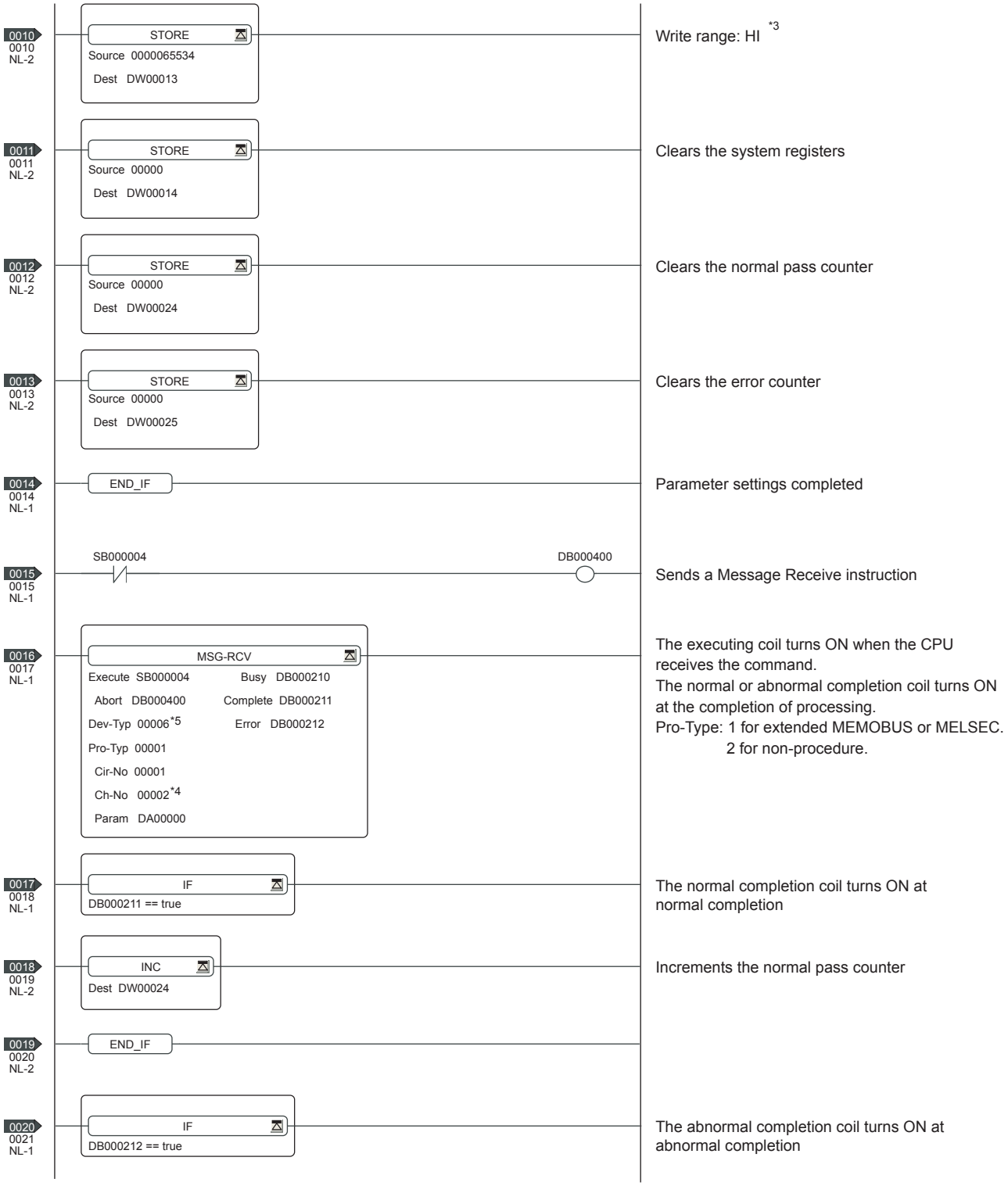
0010
0010
NL-2
STORE
Source 0000065534
Dest DW00013
Write range: HI *3
0011
0011
NL-2
STORE
Source 00000
Dest DW00014
Clears the system registers
0012
0012
NL-2
STORE
Source 00000
Dest DW00024
Clears the normal pass counter
0013
0013
NL-2
STORE
Source 00000
Dest DW00025
Clears the error counter
0014
0014
NL-1
END_IF
Parameter settings completed
SB000004
DB000400
0015
0015
NL-1
Sends a Message Receive instruction
0016
0017
NL-1
MSG-RCV
Execute SB000004
Busy DB000210
Abort DB000400
Complete DB000211
Dev-Typ 00006 *5
Error DB000212
Pro-Typ 00001
Cir-No 00001
Ch-No 00002 *4
Param DA00000
The executing coil turns ON when the CPU receives the command.
The normal or abnormal completion coil turns ON at the completion of processing.
Pro-Type: 1 for extended MEMOBUS or MELSEC.
2 for non-procedure.
0017
0018
NL-1
IF
DB000211 == true
The normal completion coil turns ON at normal completion
0018
0019
NL-2
INC
Dest DW00024
Increments the normal pass counter
0019
0020
NL-2
END_IF
0020
0021
NL-1
IF
DB000212 == true
The abnormal completion coil turns ON at abnormal completion

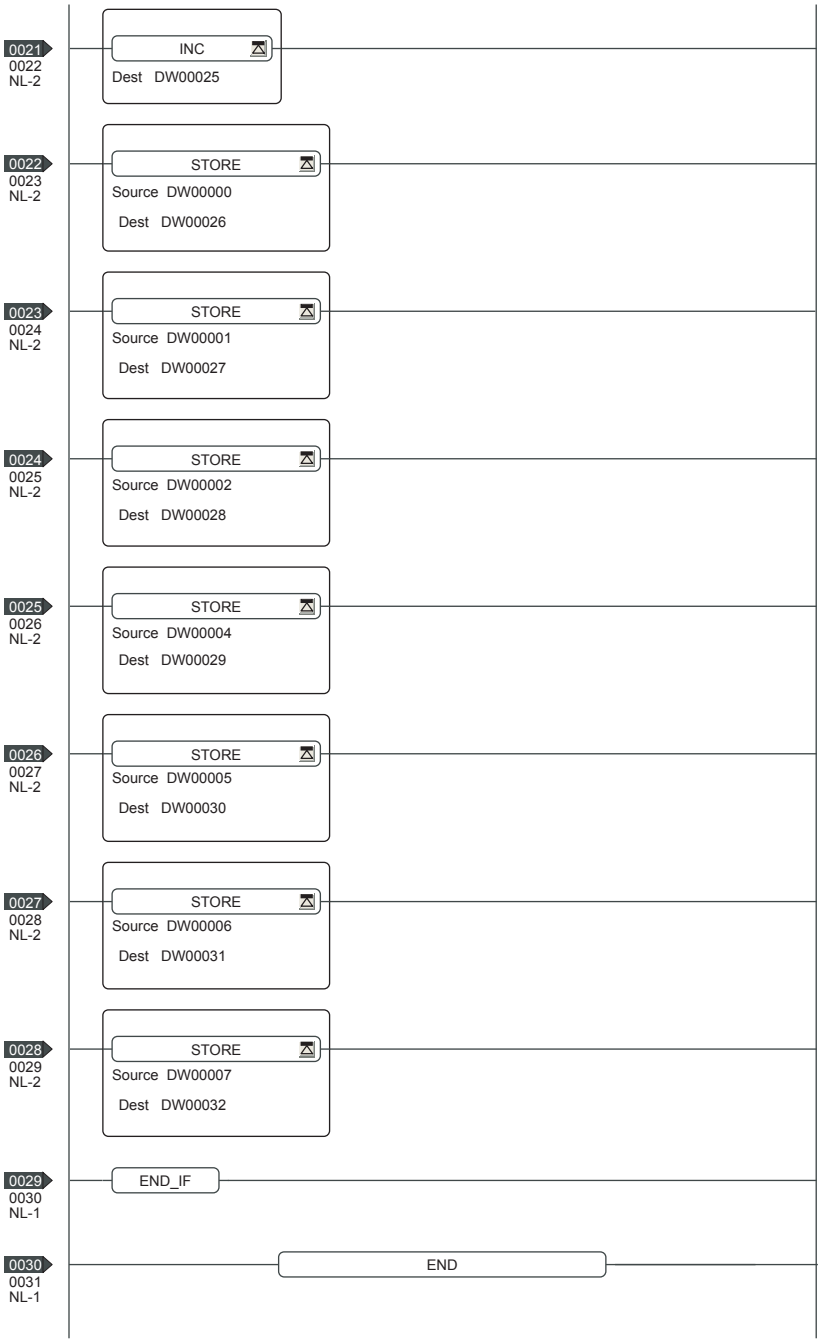

*1: When connecting to multiple GOTs, set connection numbers individually for each GOT.
*2: Set the offset for each device.
*3: Set the available write range for the holding registers.
*4: When connecting to multiple GOTs, set channel numbers individually for each GOT.
*5: Set the Dev-Typ of the message receive function <MSG-RCV> to [00016] for the built-in MP2300S Ethernet connection or the Ethernet port connection of 218IF-02.

PLC side setting (CP-9200SH, CP-312, or CP-317 series)

Point

YASKAWA PLC

For details of YASKAWA PLCs, refer to the following manuals.

YASKAWA PLC user's Manual

Parameter settings

Make the parameter settings with a peripheral tool.

■Settings for CP-218IF

Item	Set value
Module Type	CP-218
CPU Number	01
Circuit Number	01
Hot Swapping	○

Item	CNO 03	CNO 04	CNO 05
Local Port	10500	10501	10030
Node IP Address*1	192.168.001.018	192.168.001.020	192.168.001.073
Node Port*1	05016	05017	21001
Connection Type	TCP	TCP	UDP
Protocol Type	Extended MEMOBUS	Extended MEMOBUS	Extended MEMOBUS
Code	BIN	BIN	BIN

*1 Be sure to set the values above for the address so that the GOT communicates with the programmable controller correctly.
For the Host Address setting on the GOT side, refer to the following.
Page 215 Connected Ethernet Controller Setting

■Settings for 218TXB

Item		Set value
Transmission parameter setting	IP Address	IP address for 218TXB
	Response Time	Not required
	Count of Retry (Number of Retries)	Not required
Connection parameter setting	Connection Number	1
	Local Port	10500
	Node IP Address	Local IP address of GOT
	Node Port	Local port No. of GOT
	Connection Type	UDP
	Protocol Type	Extended MEMOBUS
	Code	BIN
	Node Name	Any string

Settings by DIP switch

■Settings for 218TXB

Set the DIP switch (SW2) as follows.

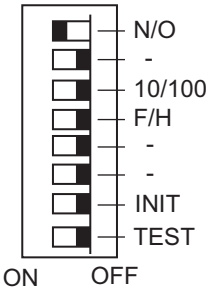

Setting Item		Set value	Setting range
N/O	Mode Selection	ON	ON: Extended mode (13 channels, up to 1024 words) OFF: Basic mode (10 channels, up to 512 words)
-*1	Not used	OFF	-
10/100	Transmission Speed	OFF	ON :10Mbps OFF :100Mbps
F/H	Transmission Mode	OFF	ON: Full duplex mode OFF: Half duplex mode
INIT	Initial Startup	OFF	ON: Start up by the default IP address and the engineering port No. OFF: Start up by the IP address and the engineering port No. set for CP-717
TEST*2	Test	OFF	ON: The module starts the self-diagnosis when the PLC is started. OFF: The module does not start the self-diagnosis when the PLC is started.

*1 Turn off all the unused switches.
When even one of those switches is on, the PLC may not normally operate.

*2 When the PLC is started with the TEST switch on, the module starts the self-diagnosis and may not perform the communication.
Turn off the switch before the communication is started.

Sequence program

To establish connection between the CP-9200SH series, CP-312 series, or CP-317 series and the GOT2000 series, a ladder program to receive messages is required.

When multiple GOTs are connected to the CP-9200SH series, CP-312 series, or CP-317 series, ladder programs to receive messages for each GOT are required.

ladder program to receive messages

```
1  0000 | $FSCAN-L      ONCOIL                                                  |
        |  SB000003      SB000004                                               |
        |-----| |-----------| |-------                                         |
1  0002  IFON

2  0003  FOR              I        = 00000      to  00031      by 00001

3  0007 ├ 00000                                                  ⇒DW00000    ...=001          .../044

2  0009  FEND

                                                                 DW-002
2  0010 ├ 00003                                                  ⇒DW00002    ...=002

                                                                 DW-008
2  0012 ├ 00000                                                  ⇒DW00008    ...=003  *1

                                                                 DW-009
2  0014                                                          ⇒DW00009    ...=004  *1

                                                                 DW-010
2  0015                                                          ⇒DW00010    ...=005  *1

                                                                 DW-011
2  0016 ├ 16500                                                  ⇒DW00011    ...=006  *1

                                                                 DW-012
2  0018 ├ 16500                                                  ⇒DW00012    ...=007

                                                                 DW-013
2  0020 ├ 18499                                                  ⇒DW00013    ...=008

1  0022  IEND
```

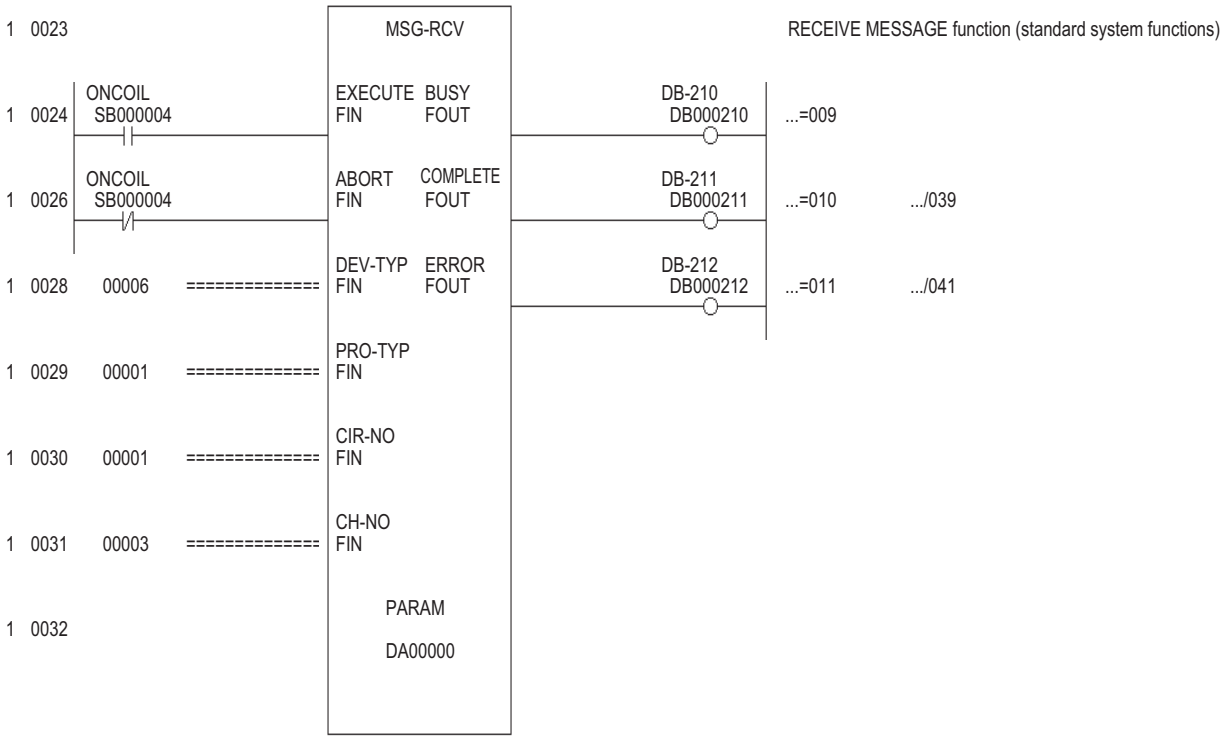

```
1  0023                                  MSG-RCV                                  RECEIVE MESSAGE function (standard system functions)

                 ONCOIL                 EXECUTE  BUSY                DB-210
1  0024           SB000004              FIN      FOUT                DB000210    ...=009

                 ONCOIL                 ABORT    COMPLETE            DB-211
1  0026           SB000004              FIN      FOUT                DB000211    ...=010        .../039

                                        DEV-TYP  ERROR               DB-212
1  0028     00006     ==============   FIN      FOUT                DB000212    ...=011        .../041

                                        PRO-TYP
1  0029     00001     ==============   FIN

                                        CIR-NO
1  0030     00001     ==============   FIN

                                        CH-NO
1  0031     00003     ==============   FIN

                                          PARAM
1  0032                                   DA00000

                 DB-211
1  0039           DB000211
                 .../036
                                DW-024
1  0040[  INC                   DW00024 ]

                 DB-212
1  0041           DB000212
                 .../038
1  0042   IFON

                                DW-025
2  0043[  INC                   DW00025 ]

                 DW-000                                          DW-026
2  0044   ├DW00000                                              ⇒DW00026    ...=014

                 .../008
                 DW-001                                          DW-027
2  0046   ├DW00001                                              ⇒DW00027    ...=016

1  0048   IEND

0  0049   DEND
```

*1 Set 0 to PARAM08 to 11 of MSG_RCV (input relay, input register, coil, holding register offset). (Do not make the offset settings.) When the offset is needed, set [Option] → [Offset] to each object or make a setting added the offset value to the device.

PLC side setting (MP3000 series)

Point

YASKAWA PLC

For details of YASKAWA PLCs, refer to the following manuals.

YASKAWA PLC user's Manual

Parameter settings

Make the parameter settings with a peripheral tool.

■Settings for the built-in MP3000 series Ethernet

Item		Set value	Range
Transmission parameter setting	IP Address	[ ].[ ].[ ].[ ]	PLC side IP address
	Subnet Mask	[ ].[ ].[ ].[ ]	PLC side setting
	Gateway IP Address	[ ].[ ].[ ].[ ]	
	Device name	Arbitrary	Up to 16 one-byte characters
Transmission parameter detailed setting	Engineering Port	256 to 65535	For a connection with software MPE720
	Response Time	0	Not required for communication with GOT
	Count of Retry	0	
Message communication of connection parameter setting	Connection Number	1	Range: 1 to 20
	Local Port	10500	256 to 65534
	Node IP Address*1	[ ].[ ].[ ].[ ]	IP address of GOT
	Node Port*1	[ ]	Port No. of GOT
	Connection Type	UDP (recommended)	TCP/UDP
	Protocol Type	Extended MEMOBUS	Extended MEMOBUS, MEMOBUS, MELSEC, None, MODBUS/TCP
	Code	BIN	RTU, BIN, ACII
	Detail	☞ • Auto receive function	
	Node Name	Arbitrary	Up to 32 one-byte characters (16 two-byte characters)

*1 Set the same the Node IP Address (Remote Station's IP Address) and the Node Port (Remote Station's Port Number) as the Local IP Address and the Local Port (Local Station's Port Number) on the GOT side.
For the Local IP Address and the Local Port (Local Station's Port Number) on the GOT side, refer to the following.
☞ Page 215 Connected Ethernet Controller Setting

• Auto receive function

Set the following items.

Item	Set value	Range
Auto receive	<When auto receive function> Valid <When using ladder program to receive messages> Invalid	Valid / Invalid
Transmission buffer channel	Set as necessary	1 to 10
Setting the slave I/F register	Default	-

Sequence program

To communicate the MP3000 series with the GOT2000 series, the ladder program to receive messages is required. When connecting the MP3000 series with multiple GOTs, ladder programs to receive messages for each GOT are required.

The example program using the MSG-RCVE function is shown below.

For details of ladder program, refer to the following manuals.

📖YASKAWA PLC user's Manual

ladder program to receive messages

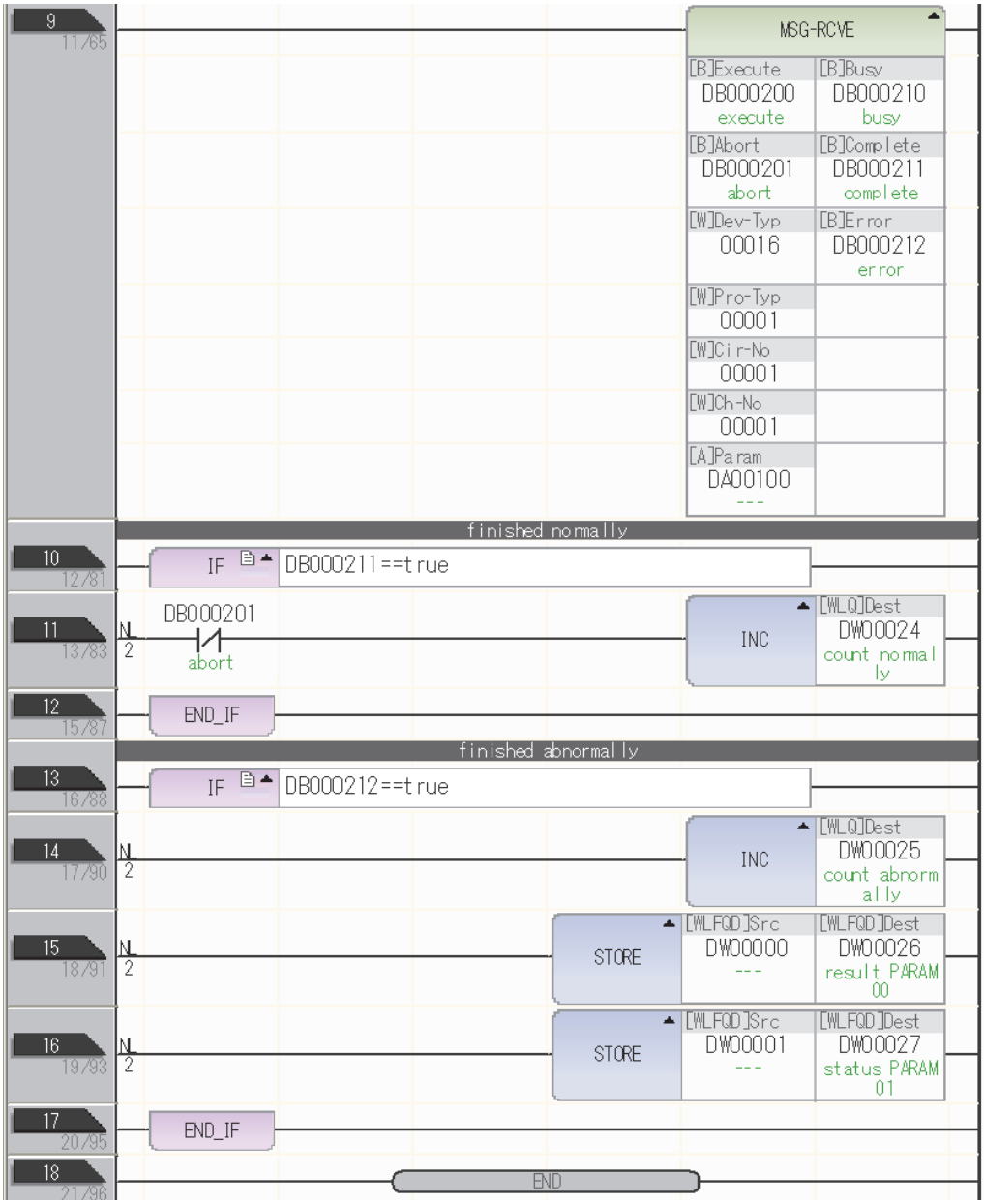
9
11/65
MSG-RCVE
[B]Execute
DB000200
execute
[B]Busy
DB000210
busy
[B]Abort
DB000201
abort
[B]Complete
DB000211
complete
[W]Dev-Typ
00016
[B]Error
DB000212
error
[W]Pro-Typ
00001
[W]Cir-No
00001
[W]Ch-No
00001
[A]Param
DA00100
---
finished normally
10
12/81
IF
DB000211==true
11
13/83
N
2
DB000201
abort
INC
[WLQ]Dest
DW00024
count normally
12
15/87
END_IF
finished abnormally
13
16/88
IF
DB000212==true
14
17/90
N
2
INC
[WLQ]Dest
DW00025
count abnormally
15
18/91
N
2
STORE
[WLFQD]Src
DW00000

[WLFQD]Dest
DW00026
result PARAM 00
16
19/93
N
2
STORE
[WLFQD]Src
DW00001

[WLFQD]Dest
DW00027
status PARAM 01
17
20/95
END_IF
18
21/96
END

Precautions

When connecting to multiple GOTs

■Setting Station

When connecting two or more GOTs in the Ethernet network, set each [Station] to the GOT.

☞ Page 215 Connected Ethernet Controller Setting

■Setting IP address

Do not use the IP address "192.168.0.18" when using multiple GOTs with the GOT 1000 series mixed.

A communication error may occur on the GOT with the IP address.

When setting IP address

Do not use "0" and "255" at the end of an IP address.

(Numbers of *.*.*.0 and *.*.*.255 are used by the system.)

The GOT may not monitor the controller correctly with the above numbers.

Consult with the administrator of the network before setting an IP address to the GOT and controller.

When connecting to the multiple network equipment (including GOT) in a segment

By increasing the network load, the transmission speed between the GOT and PLC may be reduced.

The following actions may improve the communication performance.

- Using a switching hub
- More high speed by 100BASE-TX (100Mbps)
- Reduction of the monitoring points on GOT

6.4 Settable Device Range

For the device setting dialog and range of devices usable in the GOT, refer to the following.

☞ Page 579 YASKAWA equipment ([YASKAWA GL/PROGIC8])
☞ Page 583 YASKAWA equipment ([YASKAWA CP9200(H)])
☞ Page 586 YASKAWA equipment ([YASKAWA CP9300MS(MC compatible)])
☞ Page 589 YASKAWA equipment ([YASKAWA MP2000/MP900/CP9200SH])
☞ Page 592 YASKAWA equipment ([YASKAWA MP3000])

7 YASKAWA ROBOT CONTROLLER

- Page 231 Connectable Model List
- Page 232 System Configuration
- Page 233 GOT side settings
- Page 237 Robot Controller Settings
- Page 238 Settable Device Range
- Page 239 Precautions

7.1 Connectable Model List

The following shows the connectable model.

Model name	Clock	Communication type	Connectable model	Refer to
YRC1000	×*1	Ethernet*2	GT27 GT25 GT23	☞ Page 232 Connecting to a robot controller
YRC1000micro				

*1 The YRC1000 and YRC1000micro have the clock function but cannot acquire clock information from the GOT.

*2 The high speed Ethernet server function (option) of the YRC1000 or YRC1000micro is required.
For details, contact YASKAWA Electric Corporation.

7.2 System Configuration

Connecting to a robot controller

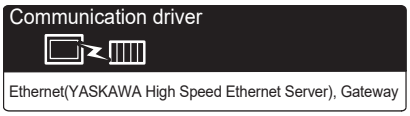

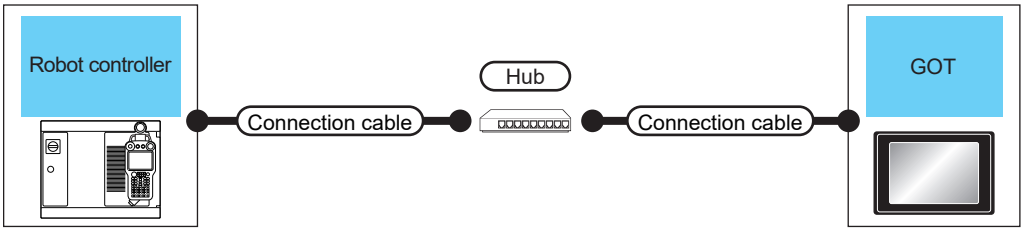

Robot controller		Connection cable		GOT		Number of connectable equipment
Model name	Communication type	Cable model*1	Max. distance*2	Option device*3	Model	
YRC1000*4	Ethernet	• 100BASE-TX Shielded twisted pair cable (STP) or unshielded twisted pair cable (UTP) of category 5 or higher • 10BASE-T Shielded twisted pair cable (STP) or unshielded twisted pair cable (UTP) of category 3 or higher	100 m	- (Built in the GOT)	GT27 GT25 GT23	Use one-to-one connection for GOT and robot controller.
				GT25-J71E71-100	GT27 GT25	
YRC1000micro	Ethernet	• 100BASE-TX Shielded twisted pair cable (STP) or unshielded twisted pair cable (UTP) of category 5 or higher • 10BASE-T Shielded twisted pair cable (STP) or unshielded twisted pair cable (UTP) of category 3 or higher	100 m	- (Built in the GOT)	GT27 GT25 GT23	Use one-to-one connection for GOT and robot controller.
				GT25-J71E71-100	GT27 GT25	

*1 The destination device connected with the twisted pair cable varies with the configuration of the Ethernet network system used.
Connect the cable to the Ethernet module, hub, transceiver or other system equipment according to the Ethernet network system used.
Use cables, connectors, and hubs that meet the IEEE802.3 10BASE-T/100BASE-TX standards.
To connect the controller and hub, use a cable according to the configuration of the controller.

*2 Length between a hub and a node
The maximum length depends on the Ethernet module used.
The following shows the number of the connectable pieces of equipment when a repeater hub is used.
• 10BASE-T: Up to 4 nodes for a cascade connection (500 m)
• 100BASE-TX: Up to 2 nodes for a cascade connection (205 m)
For the cascade connection between the switching hubs, there is no theoretical limit to the number of cascades.
For whether there is a limit or not, contact the switching hub manufacturer.

*3 GT25-W and GT2505-V do not support option devices.

*4 Connect the GOT to a LAN connector that can be used for the YRC1000's Ethernet function.
Do not connect the GOT to a LAN connector dedicated to the programming pendant.
For details, refer to the manual of the YASKAWA robot controller.

7.3 GOT side settings

Setting the communication interface (Controller setting)

Set the channel of the connected controller.

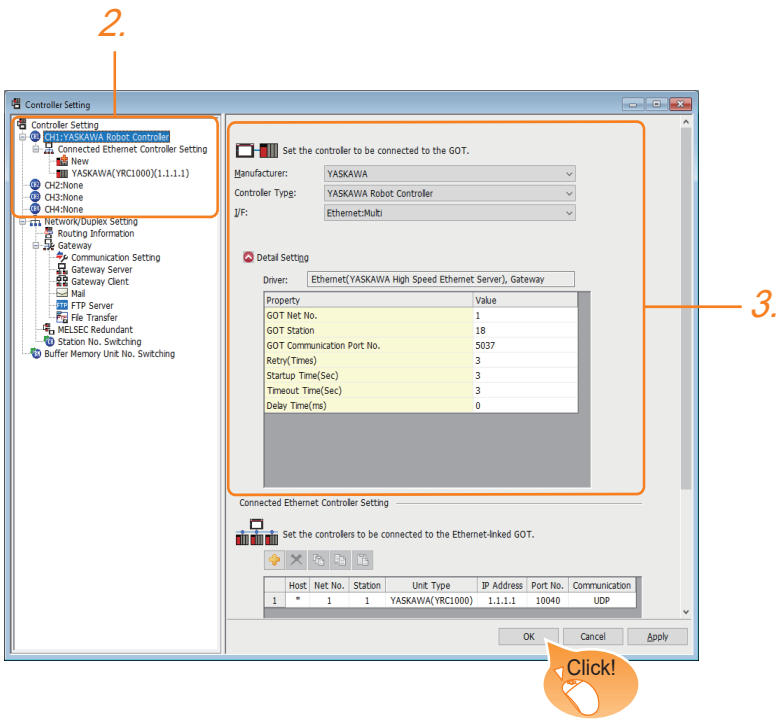

1. Select [Common] → [Controller Setting] from the menu.

2. In the [Controller Setting] window, select the channel number to be used from the list menu.

3. Set the following items.

- [Manufacturer]: [YASKAWA]
- [GOT Type]: [YASKAWA Robot Controller]
- [I/F]: [Ethernet: Multi]
- [Detail Setting]: Configure the settings according to the use environment.

☞ Page 234 Communication detail settings

4. When you have completed the settings, click the [OK] button.

Point

The controller setting can be checked in [I/F Communication Setting].
For details, refer to the following.
☞ Page 48 I/F communication setting

Communication detail settings

Configure the settings according to the use environment.

Property	Value
GOT Net No.	1
GOT Station	18
GOT Communication Port No.	5037
Retry(Times)	3
Startup Time(Sec)	3
Timeout Time(Sec)	3
Delay Time(ms)	0

Item	Description	Range
GOT Net No.	Set the network number of the GOT. (Default: 1)	1 (fixed)
GOT Station*1	Set the station number of the GOT. (Default: 18)	1 to 120
GOT Communication Port No.	Set the port number used by the GOT for connection with the Ethernet module. (Default: 5037*2)	1024 to 5010, 5014 to 49152, 49171 to 65534
Retry	Set the number of retries to be performed when a communication timeout occurs. When no response is received after retries, the communication times out. (Default: 3 times)	0 to 5 times
Startup Time	Set the time period from when the GOT starts up until when the GOT starts communication with the robot controller. (Default: 3 sec)	3 to 255 sec
Timeout Time	Set the time period for a communication to time out. (Default: 3 sec)	1 to 90 sec
Delay Time	Set the delay time for reducing the load of the network/destination robot controller. (Default: 0 ms)	0 to 10000 (ms)

*1 Set different values for [GOT Station] in [Detail Setting] and [Station] in [Connected Ethernet Controller Setting].
☞ Page 236 Connected Ethernet controller setting

*2 When assigning the same driver to the multiple channels, in the communication drivers set as the second and following, the default value of [GOT Communication Port No.] becomes the earliest number in the vacant numbers of No. 6000 and later.

Point

• Communication interface setting by the Utility

The communication interface setting can be changed on the Utility's [Communication Settings] after writing [Communication Settings] of project data.

For details on the Utility, refer to the following manual.

GOT2000 Series User's Manual (Utility)

• Precedence in communication settings

When settings are made by GT Designer3 or the Utility, the latest setting is effective.

GOT Ethernet setting

Configuring the following settings enables the GOT to connect to different networks.

GOT IP address setting

Configure the following communication port settings.

- Standard port (When using GT25-W, port 1)
- Extension port (When using GT25-W, port 2)

GOT Ethernet common setting

Configure the following settings which are common to the standard port and the extension port, or port 1 and port 2.

- [Default Gateway]
- [Peripheral S/W Communication Port No.]
- [Transparent Port No.]

IP filter setting

Configuring the IP filter settings allows or blocks access from specific IP addresses.

For details on the settings, refer to the following.

☞ Page 44 GOT Ethernet Setting

Connected Ethernet controller setting

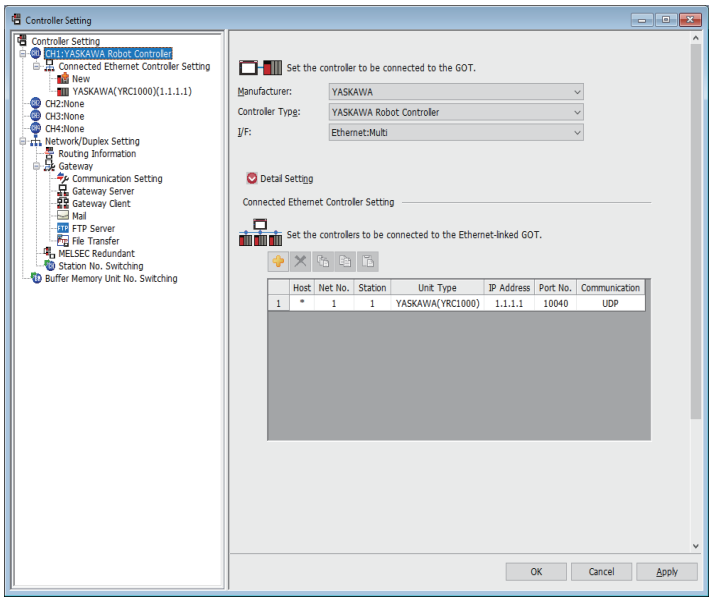

Item	Description	Setting value
Host	The host is displayed. It refers to a station that can be connected without setting a station number. (The host is indicated with an asterisk (*).)	-
Net No.	Set the network No. of the connected Ethernet module. (Default: 1)	1 (fixed)
Station No. *2	Set the station No. of the connected Ethernet module. (Default: 1)	1 to 120
Unit Type	YASKAWA(YRC1000) (fixed)	YASKAWA(YRC1000) (fixed)
IP address *1	Set the IP address of the connected Ethernet module. (Default: 1.1.1.1)	IP address of the robot controller
Port No.	Set the port No. of the connected Ethernet module. (Default: 10040)	10040 (fixed)
Communication	Select a communication format. (Default: UDP)	UDP (fixed)

*1 Connection with the robot controller is unavailable if the IP address is the default value.
Set the value to the IP address of the robot controller to be connected.

*2 Set different values for [GOT Station] in [Detail Setting] and [Station] in [Connected Ethernet Controller Setting].
☞ Page 234 Communication detail settings

7.4 Robot Controller Settings

Point

For details on the YASKAWA robot controller, refer to the following.

Manual of the YASKAWA robot controller

Connecting to a robot controller

Configure the settings by using the programming pendant.

- YRC1000
- YRC1000micro

Wireless LAN interface settings

Set the following items in the LAN interface settings.

Item	Description
IP address	IP address of the robot controller*1
Subnet Mask	Subnet mask of the robot controller

*1 Ensure that it is consistent with the GOT setting.

Page 236 Connected Ethernet controller setting

7.5 Settable Device Range

For the device setting dialog and range of devices usable in the GOT, refer to the following.

☞ Page 595 YASKAWA equipment ([YASKAWA Robot Controller])

7.6 Precautions

When connecting to multiple GOTs

■GOT station number setting

When connecting multiple GOTs in the Ethernet network, set a different GOT station number to each GOT.

☞ Page 233 Setting the communication interface (Controller setting)

■IP address setting

Do not use the IP address "192.168.0.18" when using multiple GOTs with the GOT1000 series mixed.

A communication error may occur on the GOT with the IP address.

IP address setting

Do not use "0" and "255" at the end of an IP address.

(Numbers of *.*.*.0 and *.*.*.255 are used by the system.)

The GOT may not monitor the controller correctly with the above numbers.

Consult with the administrator of the network before setting an IP address to the GOT and controller.

Connecting multiple pieces of network equipment (including GOT) in a segment

Connecting multiple pieces of network equipment (including GOT) in a segment will increase the network load. This may decrease the transmission speed between the GOT and robot controller.

The following actions may improve the communication performance.

- Using a switching hub
- Using the high speed 100BASE-TX (100 Mbps) transmission
- Reducing the number of monitored devices in the GOT

MEMO

8 YOKOGAWA PLC

- Page 241 Connectable Model List
- Page 242 Serial Connection
- Page 262 Ethernet Connection
- Page 272 Settable Device Range

8.1 Connectable Model List

The following table shows the connectable models.

Series	Model name	Clock	Communication Type	Connectable model	Refer to
FA-M3	F3SP05	○	RS-232 RS-422	GT27 GT25 GT23	☞ Page 242 Connecting to FA-M3 or FA-M3V
	F3SP08				
	F3SP10				
	F3SP20				
	F3SP30				
	F3FP36				
	F3SP21				
	F3SP22-0S				
	F3SP25				
	F3SP35				
	F3SP28				
	F3SP38				
	F3SP53				
	F3SP58				
	F3SP59				
	F3SP66				
	F3SP67				
FA-M3V	F3SP76-7S				
	F3SP71-4S				
FA500	FA500	○	RS-232 RS-422	GT27 GT25 GT23	☞ Page 244 Connecting to FA500
STARDOM	NFCP100	×	RS-232	GT27 GT25 GT23	☞ Page 245 Connecting to STARDOM
	NFJT100				
FA-M3	F3SP05	○	Ethernet	GT27 GT25 GT23	☞ Page 262 Connecting to FA-M3 or FA-M3V
	F3SP08				
	F3FP36				
	F3SP21				
	F3SP25				
	F3SP35				
	F3SP28				
	F3SP38				
	F3SP53				
	F3SP58				
	F3SP59				
	F3SP66				
	F3SP67				
FA-M3V	F3SP71-4N				
	F3SP71-4S				
	F3SP76-7S				

8.2 Serial Connection

Connecting to FA-M3 or FA-M3V

When using the conversion cable

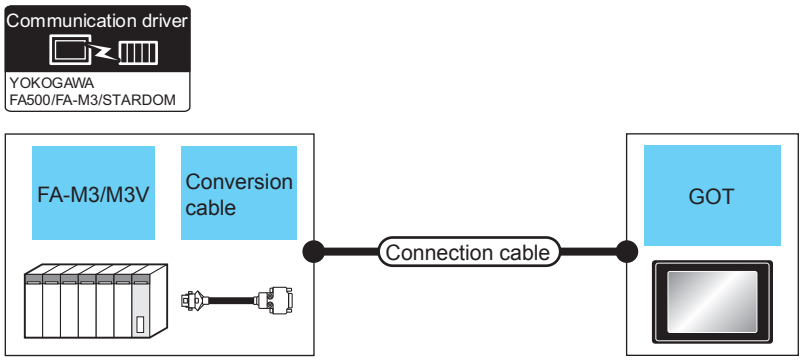

PLC			Connection cable		GOT		Number of connectable equipment
Model name	Conversion cable*1	Communication Type	Cable model Connection diagram number	Max. distance	Option device*5	Model	
F3SP05 F3SP08 F3SP21 F3SP22-0S F3SP25 F3SP28 F3SP35 F3SP38 F3SP53 F3SP58 F3SP59	KM10-0C*2	RS-232	GT09-C30R20301-9P(3m) or User preparing RS-232 connection diagram 1)	15m*4	- (Built into GOT)	GT27 GT25 GT23	1 GOT for 1 PLC
					GT15-RS2-9P	GT27 GT25	
F3SP66 F3SP67	KM10-0S*3	RS-232	GT09-C30R20301-9P(3m) or User preparing RS-232 connection diagram 1)	15m*4	- (Built into GOT)	GT27 GT25 GT23	
					GT15-RS2-9P	GT27 GT25	

*1 Product manufactured by YOKOGAWA Electric Corporation. For details of the product, contact Yokogawa Electric Corporation.
*2 CPU port/D-Sub 9-pin conversion cable
*3 SIO port adapter cable
*4 Including the length of the CPU port/D-Sub 9-pin conversion cable or the SIO port adapter cable.
*5 GT25-W, GT2505-V does not support the option device.

When using the PC link module

Communication driver
YOKOGAWA
FA500/FA-M3/STARDOM

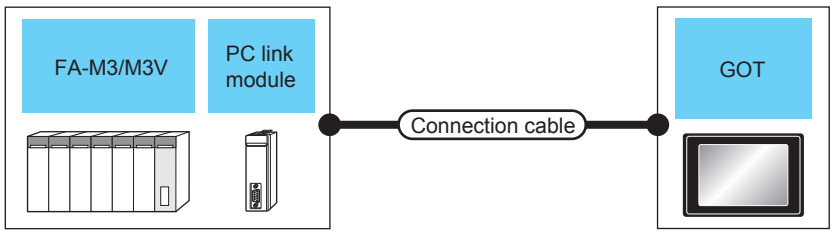

PLC			Connection cable		GOT		Number of connectable equipment
Model name	PC link module*1	Communication Type	Cable model Connection diagram number	Max. distance	Option device*2	Model	
F3SP05 F3SP08 F3SP10 F3SP20 F3SP30 F3FP36 F3SP21 F3SP25 F3SP35 F3SP28 F3SP38 F3SP53 F3SP58 F3SP59 F3SP66 F3SP67	F3LC01-1N F3LC11-1N F3LC11-1F F3LC12-1F	RS-232	GT09-C30R20302-9P(3m) or User preparing RS-232 connection diagram 2)	15m	- (Built into GT)	GT27 GT25 GT23	1 GT for 1 PC link module
					GT15-RS2-9P	GT27 GT25	
F3SP76-7S F3SP71-4S	F3LC12-1F						
F3SP05 F3SP08 F3SP20 F3SP30 F3FP36 F3SP21 F3SP25 F3SP35 F3SP28 F3SP38 F3SP53 F3SP58 F3SP59 F3SP66 F3SP67 F3SP71-4S	F3LC11-2N F3LC11-2F	RS-422	GT09-C30R40301-6T(3m) GT09-C100R40301-6T(10m) GT09-C200R40301-6T(20m) GT09-C300R40301-6T(30m) or User preparing RS-422 connection diagram 1)	1200m	- (Built into GT)	GT27 GT25 GT23	
					GT15-RS4-9S	GT27 GT25	

*1 Product manufactured by YOKOGAWA Electric Corporation. For details of the product, contact Yokogawa Electric Corporation.
*2 GT25-W, GT2505-V does not support the option device.

Connecting to FA500

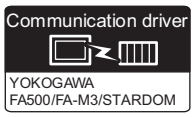

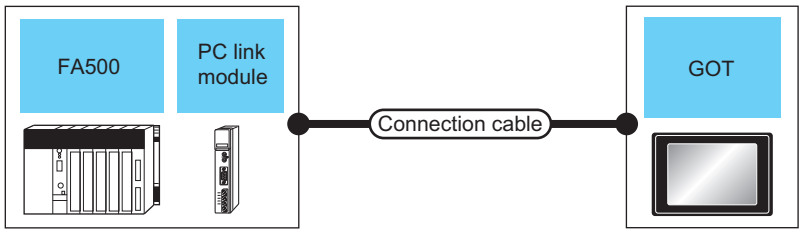

PLC			Connection cable		GOT		Number of connectable equipment
Series	PC link module*1	Communication Type	Cable model Connection diagram number	Max. distance	Option device*2	Model	
FA500	LC01-0N LC02-0N	RS-232	GT09-C30R20205-25P(3m) or User preparing RS-232 connection diagram 3)	15m	- (Built into GOT)	GT27 GT25 GT23	1 GOT for 1 PC link module
					GT15-RS2-9P	GT27 GT25	
	LC02-0N	RS-422	GT09-C30R40302-6T(3m) GT09-C100R40302-6T(10m) GT09-C200R40302-6T(20m) GT09-C300R40302-6T(30m) or User preparing RS-422 connection diagram 2)	1200m	- (Built into GOT)	GT27 GT25 GT23	
					GT15-RS4-9S	GT27 GT25	

*1 Product manufactured by YOKOGAWA Electric Corporation. For details of the product, contact Yokogawa Electric Corporation.

*2 GT25-W, GT2505-V does not support the option device.

Connecting to STARDOM

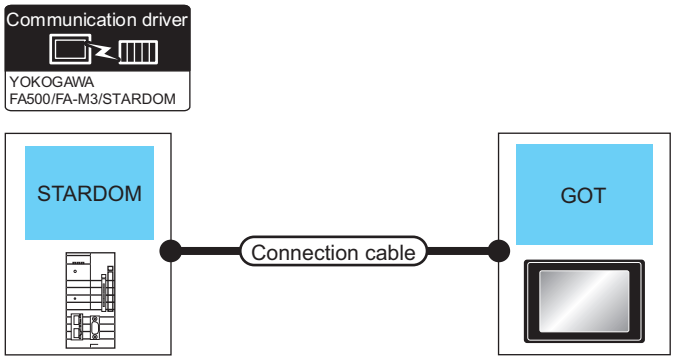

PLC		Connection cable*1		GOT		Number of connectable equipment
Series	Communication Type	Cable model Connection diagram number	Max. distance	Option device*2	Model	
STARDOM	RS-232	GT09-C30R20305-9S(3m) or User preparing RS-232 connection diagram 2)	15m	- (Built into GOT)	GT27 GT25 GT23	1 GOT for 1 PLC
				GT15-RS2-9P	GT27 GT25	

*1 Connect the connection cable to the COM port of the PLC.

*2 GT25-W, GT2505-V does not support the option device.

Connection diagram

The following diagram shows the connection between the GOT and the PLC.

RS-232 cable

■Connection diagram

• RS-232 connection diagram 1)

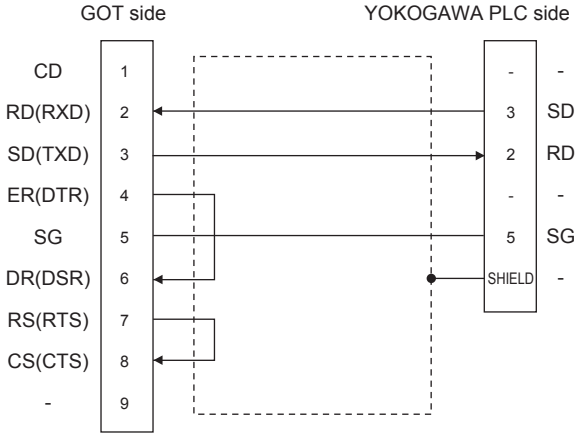

• RS-232 connection diagram 2)

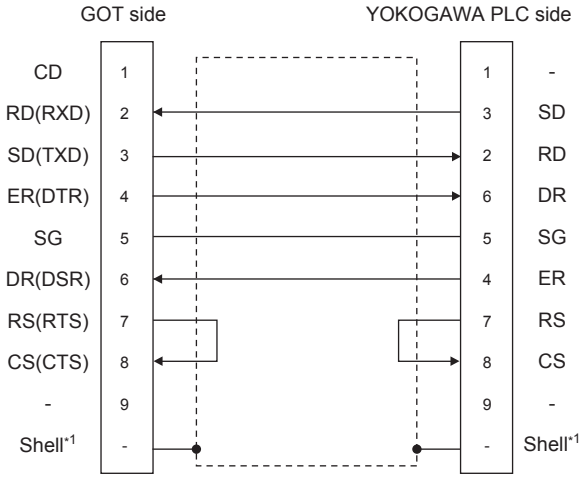

*1 Connect the shield to the housing of the connectors on both the GOT and YOKOGAWA product sides.

• RS-232 connection diagram 3)

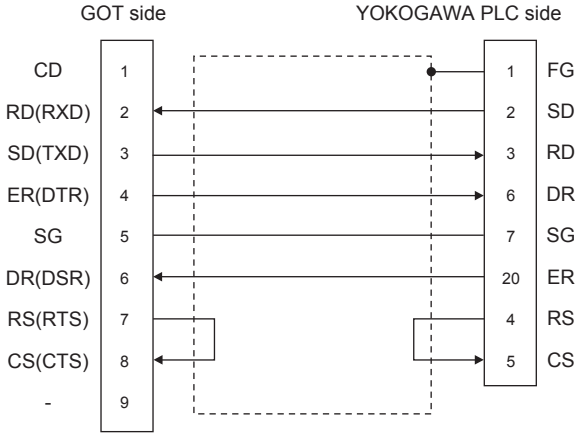

■Precautions when preparing a cable

• Cable length

The length of the RS-232 cable must be 15m or less.

• GOT side connector

For the GOT side connector, refer to the following.

☞ Page 58 GOT connector specifications

• YOKOGAWA PLC side connector

Use the connector compatible with the YOKOGAWA PLC side module.

For details, refer to the YOKOGAWA PLC user's manual.

RS-422 cable

■Connection diagram

• RS-422 connection diagram 1)

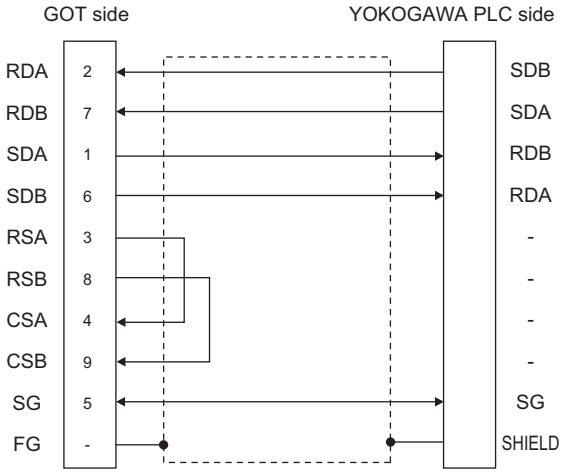

• RS-422 connection diagram 2)

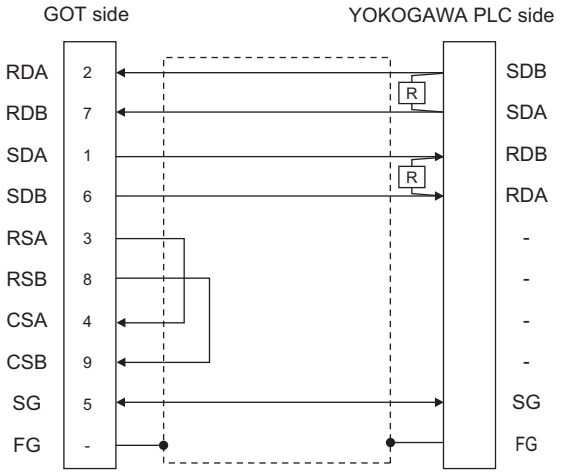

■Precautions when preparing a cable

• Cable length

The length of the RS-422 cable must be 1200m or less.

• GOT side connector

For the GOT side connector, refer to the following.

☞ Page 58 GOT connector specifications

• YOKOGAWA PLC side connector

Use the connector compatible with the YOKOGAWA PLC side module.

For details, refer to the YOKOGAWA PLC user's manual.

■Connecting terminating resistors

• GOT side

1) For GT27,GT25(Except GT2505-V),GT23

Set the terminating resistor setting switch of the GOT main unit to "Disable".

2) For GT2505-V

Set the terminating resistor selector to "330Ω".

For the procedure to set the terminating resistor, refer to the following.

☞ Page 62 Terminating resistors of GOT

• YOKOGAWA PLC side

When connecting a PLC link module to a GOT, a terminating resistor must be connected to the PC link module.

The following describes how to connect it on the PC link module.

F3LC11-2N

Set the terminator switch (TERMINATOR) on the front panel of F3LC11-2N to the "4-WIRE" side to enable the terminator.

LC02-0N

Connect the terminating resistor provided with the LC02-0N across SDA and SDB, and across RDA and RDB on the terminal block.

GOT side settings

Setting communication interface (Communication settings)

Set the channel of the connected equipment.

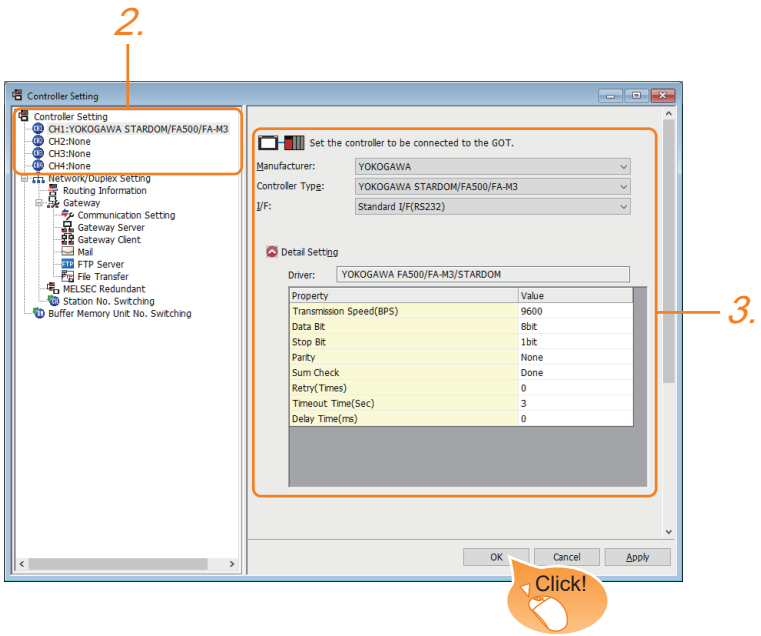

1. Select [Common] → [Controller Setting] from the menu.
2. In the [Controller Setting] window, select the channel No. to be used from the list menu.
3. Set the following items.
   - [Manufacturer]: [YOKOGAWA]
   - [Controller Type]: [YOKOGAWA STARDOM/FA500/FA-M3]
   - [I/F]: Interface to be used
   - [Detail Setting]: Configure the settings according to the usage environment.

☞ Page 250 Communication detail settings

4. When you have completed the settings, click the [OK] button.

Point

The settings of connecting equipment can be confirmed in [I/F Communication Setting].
For details, refer to the following.

☞ Page 48 I/F communication setting

Communication detail settings

Make the settings according to the usage environment.

Property	Value
Transmission Speed(BPS)	9600
Data Bit	8bit
Stop Bit	1bit
Parity	None
Sum Check	Done
Retry(Times)	0
Timeout Time(Sec)	3
Delay Time(ms)	0

Item	Description	Range
Transmission Speed	Set this item when change the transmission speed used for communication with the connected equipment. (Default: 9600bps)	4800bps, 9600bps, 19200bps, 38400bps, 57600bps, 115200bps
Data Bit	Set this item when change the data length used for communication with the connected equipment. (Default: 8bits)	7bits/8bits
Stop Bit	Specify the stop bit length for communications. (Default: 1bit)	1bit/2bits
Parity	Specify whether or not to perform a parity check, and how it is performed during communication. (Default: No)	None Even Odd
Sum Check	Set whether or not to perform a sum check during communication. (Default: Yes)	Yes or No
Retry	Set the number of retries to be performed when a communication timeout occurs. When receiving no response after retries, the communication times out. (Default: 0time)	0 to 5times
Timeout Time	Set the time period for a communication to time out. (Default: 3sec)	1 to 30sec
Delay Time	Set this item to adjust the transmission timing of the communication request from the GOT. (Default: 0ms)	0 to 300(ms)

Point

• Communication interface setting by the Utility

The communication interface setting can be changed on the Utility's [Communication setting] after writing [Communication Settings] of project data.

For details on the Utility, refer to the following manual.

GOT2000 Series User's Manual (Utility)

• Precedence in communication settings

When settings are made by GT Designer3 or the Utility, the latest setting is effective.

PLC side setting

Point

YOKOGAWA PLC

For details of YOKOGAWA PLCs, refer to the following manuals.

YOKOGAWA PLC user's Manual

Model name		Refer to
CPU port/D-Sub 9-pin conversion cable	KM10-0C	Page 252 Connecting a conversion cable
SIO port adapter cable	KM10-0S	
PC link module	F3LC01-1N	Page 253 Switch setting on the PC link module (F3LC01-1N, F3LC11-1N, F3LC11-2N, F3LC11-2F)
	F3LC11-1N	
	F3LC11-2N	
	F3LC11-2F	
	F3LC11-1F	Page 255 Switch setting on the PC link module (F3LC11-1F, F3LC12-1F)
	F3LC12-1F	
	LC01-0N	Page 257 Switch setting on the PC link module (LC01-0N, LC02-0N)
	LC02-0N	
STARDOM		Page 259 Connecting to STARDOM

Connecting a conversion cable

The following describes the settings for connecting a CPU port/D-sub 9-pin conversion cable or SIO port adapter cable.

Setting of PLC CPU

Make the PLC CPU settings, displaying [Configuration] → [Communication Settings] with the program development tool or the ladder-programming tool.

<table>
<tr><th>Item</th><th colspan="5">Set value</th></tr>
<tr><td>Communication mode*1</td><td colspan="5">Set the communication mode of the CPU (transmission speed and data format).
Set the transmission speed and data format according to settings of the transmission speed, data length, parity and stop bit on the GOT side.
For details on these GOT side settings, refer to the following.
☞ Page 249 Setting communication interface (Communication settings)</td></tr>
<tr><td rowspan="12"></td><td rowspan="2">Item</td><td colspan="4">Transmission speed and data format</td></tr>
<tr><td>Transmission speed</td><td>Data bit</td><td>Parity</td><td>Stop bit</td></tr>
<tr><td>Communication mode 0</td><td>9600 bps</td><td>8bits</td><td>Even</td><td>1bit</td></tr>
<tr><td>Communication mode 1</td><td>9600 bps</td><td>8bits</td><td>None</td><td>1bit</td></tr>
<tr><td>Communication mode 2</td><td>19200 bps</td><td>8bits</td><td>Even</td><td>1bit</td></tr>
<tr><td>Communication mode 3</td><td>19200 bps</td><td>8bits</td><td>None</td><td>1bit</td></tr>
<tr><td>Communication mode 4</td><td>38400 bps</td><td>8bits</td><td>Even</td><td>1bit</td></tr>
<tr><td>Communication mode 5</td><td>38400 bps</td><td>8bits</td><td>None</td><td>1bit</td></tr>
<tr><td>Communication mode 6</td><td>57600 bps</td><td>8bits</td><td>Even</td><td>1bit</td></tr>
<tr><td>Communication mode 7</td><td>57600 bps</td><td>8bits</td><td>None</td><td>1bit</td></tr>
<tr><td>Communication mode 8</td><td>115200 bps</td><td>8bits</td><td>Even</td><td>1bit</td></tr>
<tr><td>Communication mode 9</td><td>115200 bps</td><td>8bits</td><td>None</td><td>1bit</td></tr>
<tr><td>CPU PC link function settings</td><td colspan="5">Set the following when using the CPU programming port as the PC link function.
Make the checksum setting according to the sum check setting on the GOT side.
For the sum check setting on the GOT side, refer to the following.
☞ Page 249 Setting communication interface (Communication settings)</td></tr>
<tr><td rowspan="4"></td><td colspan="2">Item</td><td colspan="3">Set value</td></tr>
<tr><td colspan="2">Use of PC link function</td><td colspan="3">Mark. (Use enabled)</td></tr>
<tr><td colspan="2">Checksum</td><td colspan="3">Mark. (ON)
Do not mark. (OFF)</td></tr>
<tr><td colspan="2">End character</td><td colspan="3">Do not mark. (OFF)</td></tr>
<tr><td colspan="2">Protect function</td><td colspan="3">Do not mark. (OFF)</td></tr>
</table>

*1 The communication mode that can be selected differs according to the CPU.

Connecting to PC link module

For the settings for connecting to the PC link module, refer to the following.

☞ Page 253 Switch setting on the PC link module (F3LC01-1N, F3LC11-1N, F3LC11-2N, F3LC11-2F)
☞ Page 255 Switch setting on the PC link module (F3LC11-1F, F3LC12-1F)
☞ Page 257 Switch setting on the PC link module (LC01-0N, LC02-0N)

Switch setting on the PC link module (F3LC01-1N, F3LC11-1N, F3LC11-2N, F3LC11-2F)

Set the switches accordingly.

Point

Switch setting

Set the switches before mounting the Ethernet Interface Module on the base unit.

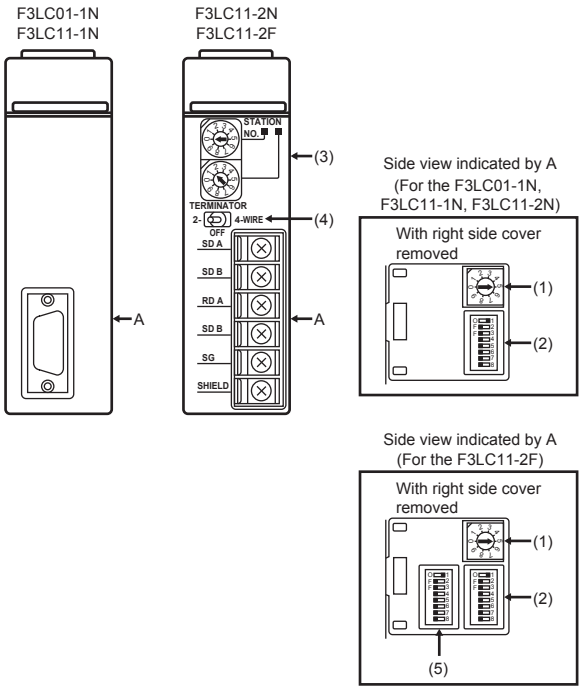

■Transmission speed setting switch

Set the same transmission speed of the GOT.

For the transmission speed setting on the GOT side, refer to the following.

☞ Page 250 Communication detail settings

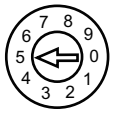

Setting*1	Transmission speed
4	4800bps
5	9600bps
6	19200bps

*1 Only transmission speeds available on the GOT side are shown.

■Data format setting switch

Set the data length, parity, stop bit and checksum consistent with the corresponding settings on the GOT side.

For the settings on the GOT side, refer to the following.

☞ Page 250 Communication detail settings

Switch No.	Description	Settings
1	Data bit	ON (8bits), OFF (7bits)
2	Parity	ON (done), OFF (none)
3		ON (even), OFF (odd)
4	Stop bit	ON (2bits), OFF (1bit)
5	Checksum	ON (done), OFF (none)
6	End character specification	OFF (none)
7	Protect function	OFF (disabled)
8	—	OFF

■Station No. switch (F3LC11-2N only)

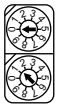

Rotary switch	Description	Settings
1)	Station No. (10's digit)	0
2)	Station No. (1's digit)	1

■Terminator switch (F3LC11-2N only)

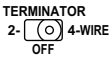

Settings	Description
4-WIRE	Resistor connected (4-wire type)

■SW3 switch (F3LC11-2F only)

Unused switch.Turn off all the unused switches.

Switch setting on the PC link module (F3LC11-1F, F3LC12-1F)

Set the switches accordingly.

Point

Switch setting

Set the switches before mounting the Ethernet Interface Module on the base unit.

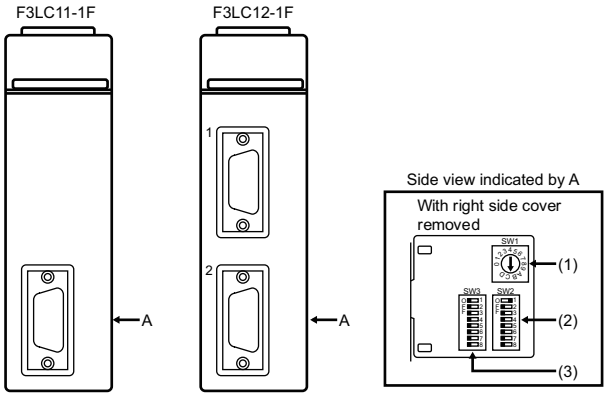

■Transmission speed switch (SW1)

Set the same transmission speed of the GOT.

For the transmission speed setting on the GOT side, refer to the following.

☞ Page 250 Communication detail settings

Setting*1	Transmission speed
4	4800bps
5	9600bps
7	19200bps
9	38400bps
A	57600bps
C	115200bps

*1 Only transmission speeds available on the GOT side are shown.

■Data format switch (SW2)

Set the character length, parity, stop bit and checksum consistent with the corresponding settings on the GOT side.

For the settings on the GOT side, refer to the following.

☞ Page 250 Communication detail settings

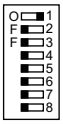

Switch No.	Description	Settings
1	Character length	ON (8bits), OFF (7bits)
2	Parity	ON (done), OFF (none)
3		ON (even), OFF (odd)
4	Stop bit	ON (2bits), OFF (1bit)
5	Checksum	ON (done), OFF (none)
6	End character specification	OFF (none)
7	Protect function	OFF (disabled)
8	Security function	OFF (disabled)

■Module function switch (SW3)

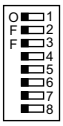

Switch No.	Description	Settings
1 to 6	User setting inhibited	OFF
7	Modem compatibility	OFF (not compatible)
8	External modem	OFF (none)

Switch setting on the PC link module (LC01-0N, LC02-0N)

Set the switches accordingly.

Point

Switch setting

Set the switches before mounting the Ethernet Interface Module on the base unit.

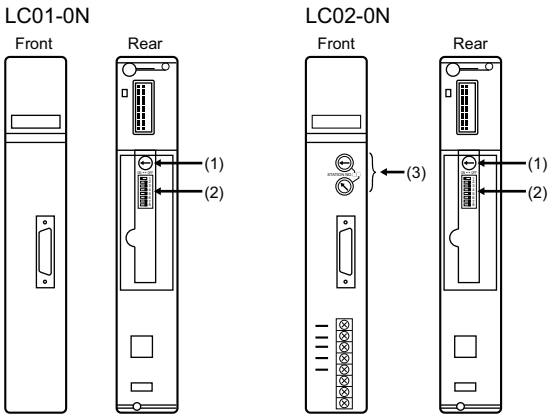

■Transmission speed setting switch

Set the same transmission speed of the GOT.

For the transmission speed setting on the GOT side, refer to the following.

☞ Page 250 Communication detail settings

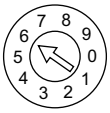

Setting*1	Transmission speed
4	4800bps
5	9600bps
6	19200bps

*1 Only transmission speeds available on the GOT side are shown.

■Data format setting switch

Set the data length, parity, stop bit and checksum consistent with the corresponding settings on the GOT side.

For the settings on the GOT side, refer to the following.

☞ Page 250 Communication detail settings

Switch No.	Description	Settings
1	Data bit	ON (8bits), OFF (7bits)
2	Parity	ON (done), OFF (none)
3		ON (even), OFF (odd)
4	Stop bit	ON (2bits), OFF (1bit)
5	Checksum	ON (done), OFF (none)
6	End character specification	OFF (none)
7	Protect function	OFF (disabled)
8	—	OFF

■Station No. switch (LC02-0N only)

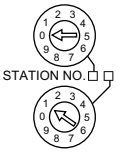

Rotary switch	Description	Settings	
		For RS-232 communication	For RS-422 communication
1)	Station No. (10's digit)	0	0
2)	Station No. (1's digit)	1	2

Connecting to STARDOM

Make the communication settings as shown below.For details of the communication settings, refer to the following manual.
📖Peripheral Software Manual for YOKOGAWA PLC

Point

Connection between STARDOM and the PC for communication settings
For the communication settings of STARDOM, STARDOM and the PC for communication settings must be connected to Ethernet using the Resource Configurator (peripheral software).

COM port setting

Make the settings on the FCX Maintenance Page for STARDOM.

1. Select [Reboot (Maintenance Mode)] on the Reboot screen of the FCX Maintenance Page to set the maintenance mode.
2. Set the COM1 port driver to be used.Execute [JEROS Basic Setting File] from the [Edit System Setting File] screen on the FCX Maintenance Page.

Confirm that the line of [Com1SioDriver] is as follows.
Com1SioDriver=DUONUS_SIO

3. Set the COM1 port to be used.Execute [COM1 Port Setting File] from the [Edit System Setting Files] screen on the FCX Maintenance Page.Make the settings as follows according to the communication specifications on the setting screen.

Leave the settings as default if not listed on the communication setting items.
(Communication setting items) ( ) in the table shows the names on the FCX Maintenance Page.

Item	Set value
Transmission speed (Baudrate)*1	4800bps, 9600bps, 19200bps, 38400bps, 57600bps, 115200bps
Data length (DataBitLength)*1	8bits, 7bits
Stop bit (StopBitLength)*1	1bit, 2bits
Parity bit (Parity)*1	none/odd/even

Baudrate	=	*1
DataBitLength	=	*1
StopBitLength	=	*1
Parity	=	*1
FifoMode	=	YES
InitialDTRState	=	ON
SendFlowControlMode	=	CTS
ReceiveFlowControlMode	=	DTR

*1 Adjust the settings with GOT communication settings.
☞ Page 250 Communication detail settings

4. Select "Reboot (Online Mode)" on the "Reboot" screen of the FCX Maintenance Page to set the online mode.

Defining Logic POU

Define Logic POU using Logic Designer (peripheral software), and download the project to STARDOM.

1. Start Logic Designer and create a new project using a template.

Use [STARDOM Serial Communication] template.

2. Insert FA-M3 Emulator Firmware Library to the new project.

- Right-click [Library] under the project tree in Logic Designer.
- Right-click [Insert] and select [Firmware Library].
- Double-click the [SD_FCXPLCR_LIB] folder and double-click [SD_FCXPLCR_LIB.fwl] to select it.
- The library path inserted in the procedures above is as follows.

{Install Folder}\LogicDesigner\Mwt\Plc\Fw_lib\SD_FCXPLCR_LIB\SD_FCXPLCR_LIB.fwl

3. Insert FA-M3 Emulator User Library to the new project.

- Right-click [Library] under the project tree in Logic Designer.
- Right-click [Insert] and select [User Library].
- Double-click [SD_CFAM3R_PF.mwt] to select it.
- The library path inserted in the procedures above is as follows.

{Install Folder}\LogicDesigner\Libraries\SD_CFAM3R_PF.mwt

4. Copy a sample project POU to the new project.

- Open C{Install Folder}\LogicDesigner\Projects\EXAMPLE_J.mwt.
- Right-click [FAM3_Emulator] in the Logic POU under the project tree in the Example_J project, and select [Copy].
- Right-click the [Logic POU] under the project tree in the created new project, and select [Paste].
- Double-click the [FAM3_Emulator*] file in the [FAM3_Emulator*] folder.
- For the following terminals, set as shown below.

REQ terminal : TRUE

TERMCHAR terminal : FALSE

PORT terminal : COM1

STATION terminal : STATION1

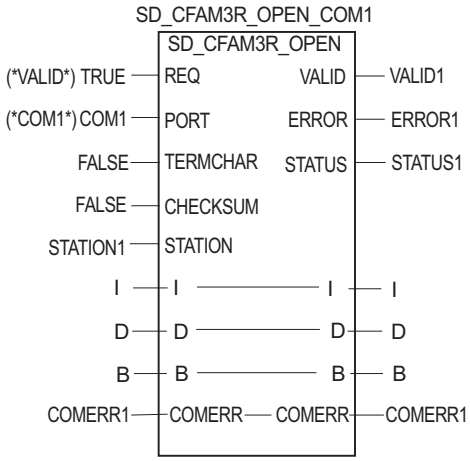

(Definition example of Logic POU)

5. Defining the instance

Instantiate Logic POU. Define an already defined instance to Task0.

- Right-click the [Physical hardware] [Configuration:IPC_33/FCX01:FCX/Tasks/Task0:CYCLIC] and select [Insert] - [Program instance].
- Define the program instance name and select FAM3_Emulator for the program type.

6. Defining Target Setting

Define the IP address or host name of STARDOM for which the communication settings are made.

Double-click [Physical hardware] [Configuration:IPC_33/FCX01:FCX/Target Setting] and input the IP address or the host name.

7. Downloading the project

- Execute [Build] - [Make]. (Same as when pressing the function key F9).
- Download after confirming that the compile error does not occur. Select [Download] in the project control dialog displayed when [Online] - [Project control] is selected.
- When the download is completed, select [Cold] and start STARDOM.

Precautions

Device range

When performing monitoring with the GOT connected to a YOKOGAWA PLC and setting devices for objects, use devices within the device range of the YOKOGAWA PLC.

When a device outside the range is set on an object, an indefinite value is displayed on the object.

(No error is displayed in the system alarm.)

For details on the device range of YOKOGAWA PLCs, refer to the following manual:

☞ Page 272 Settable Device Range

Connecting to STARDOM

■Redundant system

When STARDOM is configured with a redundant system, the connection is not supported.

■System alarm

The PLC error does not appear in the system alarm.

■GOT clock control

Since the STARDOM does not have a clock function, the settings of [time adjusting] or [time broad cast] by GOT clock control will be disabled.

8.3 Ethernet Connection

Connecting to FA-M3 or FA-M3V

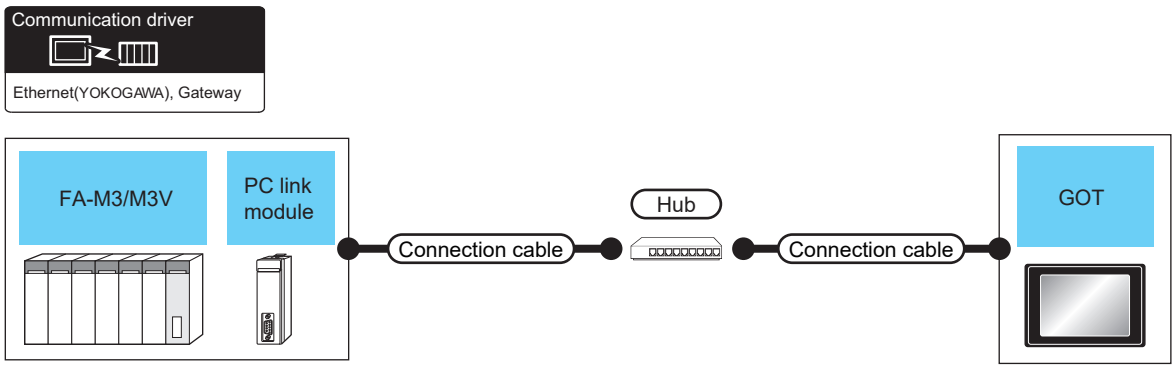

PLC		Connection cable		GOT		Number of connectable equipment
Model name	Ethernet interface module*1	Cable model*2 Connection diagram number	Maximum segment length*3	Option device*4	Model	
F3SP05 F3SP08 F3FP36 F3SP21 F3SP25 F3SP35 F3SP28 F3SP38 F3SP53 F3SP58 F3SP59 F3SP76-7S	F3LE01-5T F3LE11-0T F3LE12-0T	• 10BASE-T Shielded twisted pair cable (STP) or unshielded twisted pair cable (UTP) : Category 3, 4, and 5 • 100BASE-TX Shielded twisted pair cable (STP) : Category 5 and 5e	100m	- (Built into GOT)	GT27 GT25 GT23	When PLC:GOT is N:1 The following shows the number of PLCs for 1 GOT TCP: 128 or less UDP: 128 or less When PLC:GOT is 1:N The following shows the number of GOTs for 1 PLC TCP: 8 or less UDP: 128 or less (recommended to 16 or less)
				GT25-J71E71-100	GT27 GT25	
F3SP71-4S	F3LE11-0T		100m	- (Built into GOT)	GT27 GT25 GT23	
				GT25-J71E71-100	GT27 GT25	
F3SP66 F3SP67 F3SP71-4N F3SP71-4S F3SP76-7S	-		100m	- (Built into GOT)	GT27 GT25 GT23	
				GT25-J71E71-100	GT27 GT25	

*1 Product manufactured by YOKOGAWA Electric Corporation. For details of the product, contact Yokogawa Electric Corporation.

*2 The destination connected with the twisted pair cable varies with the configuration of the applicable Ethernet network system.
Connect to the Ethernet module, hub, transceiver or other system equipment corresponding to the applicable Ethernet network system.
Use cables, connectors, and hubs that meet the IEEE802.3 10BASE-T/100BASE-TX standards.
To connect the target device and hub, use a cable according to the target device configuration.

*3 A length between a hub and a node.
The maximum distance differs depending on the Ethernet device to be used.
The following shows the number of the connectable nodes when a repeater hub is used.
• 10BASE-T: Max. 4 nodes for a cascade connection (500m)
• 100BASE-TX: Max. 2 nodes for a cascade connection (205m)
When switching hubs are used, the cascade connection between the switching hubs has no logical limit for the number of cascades.
For the limit, contact the switching hub manufacturer.

*4 GT25-W, GT2505-V does not support the option device.

GOT Side Settings

Setting communication interface (Communication settings)

Set the channel of the connected equipment.

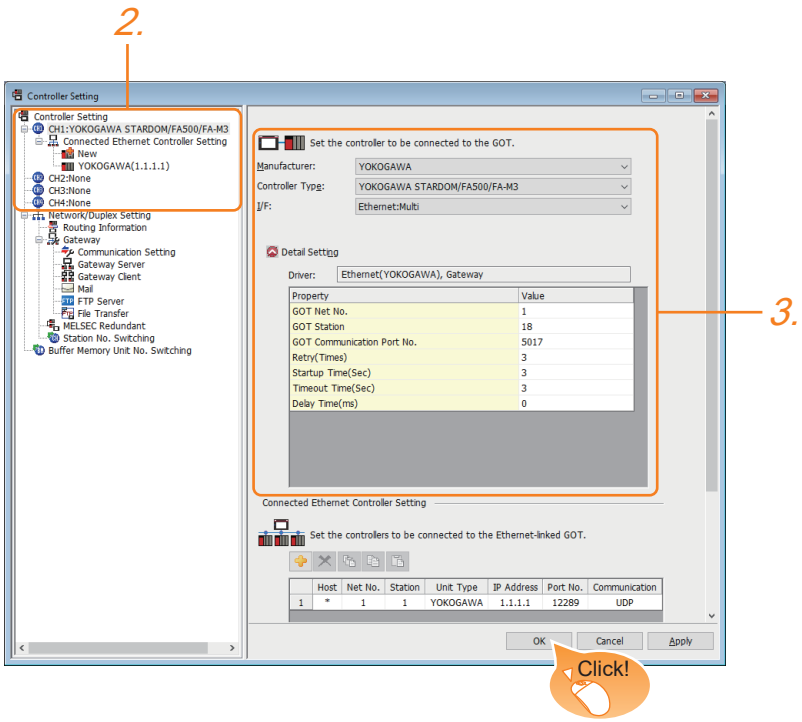

1. Select [Common] → [Controller Setting] from the menu.
2. In the [Controller Setting] window, select the channel No. to be used from the list menu.
3. Set the following items.

- [Manufacturer]: [YOKOGAWA]
- [Controller Type]: [YOKOGAWA STARDOM/FA500/FA-M3]
- [I/F]: [Ethernet:Multi]
- [Detail Setting]: Configure the settings according to the usage environment.

☞ Page 265 Communication detail settings

4. When you have completed the settings, click the [OK] button.

Point

The settings of connecting equipment can be confirmed in [I/F Communication Setting].
For details, refer to the following.
☞ Page 48 I/F communication setting

Communication detail settings

Make the settings according to the usage environment.

Property	Value
GOT Net No.	1
GOT Station	18
GOT Communication Port No.	5017
Retry(Times)	3
Startup Time(Sec)	3
Timeout Time(Sec)	3
Delay Time(ms)	0

Item	Description	Range
GOT Net No.	Set the network No. of the GOT. (Default: 1)	1 to 239
GOT Station*1	Set the station No. of the GOT. (Default: 18)	1 to 64
GOT Communication Port No.	Set the GOT port No. for the connection with the Ethernet equipment. (Default: 5017*2)	1024 to 5010, 5014 to 49152, 49171 to 65534
Retry	Set the number of retries to be performed when a communication timeout occurs. When receiving no response after retries, the communication times out. (Default: 3times)	0 to 5times
Startup Time	Specify the time period from the GOT startup until GOT starts the communication with the PLC CPU. (Default: 3sec)	3 to 255sec
Timeout Time	Set the time period for a communication to time out. (Default: 3sec)	1 to 90sec
Delay Time	Set the delay time for reducing the load of the network/destination PLC. (Default: 0ms)	0 to 10000 (ms)

*1 Set different values for [GOT Station] of [Detail Setting] and [Station] of [Connected Ethernet Controller Setting].
☞ Page 266 Connected Ethernet Controller Setting

*2 When assigning the same driver to the multiple channels, in the communication drivers set as the second and following, the default value of [GOT Communication Port No.] becomes the earliest number in the vacant numbers of No. 6000 and later.

Point

• Communication interface setting by the Utility

The communication interface setting can be changed on the Utility's [Communication setting] after writing [Communication Settings] of project data.

For details on the Utility, refer to the following manual.

📖GOT2000 Series User's Manual (Utility)

• Precedence in communication settings

When settings are made by GT Designer3 or the Utility, the latest setting is effective.

GOT Ethernet Setting

The GOT can be connected to a different network by configuring the following setting.

■GOT IP address setting

Set the following communication port setting.

- Standard port (When using GT25-W, port 1)
- Extension port (When using GT25-W, port 2)

■GOT Ethernet common setting

Set the following setting which is common to the standard port and the extension port, or port 1 and port 2.

- [Default Gateway]
- [Peripheral S/W Communication Port No.]
- [Transparent Port No.]

■IP filter setting

By configuring the IP filter setting, the access from the specific IP address can be permitted or shut off.

For the detailed settings, refer to the following manual.

☞ Page 44 GOT Ethernet Setting

Connected Ethernet Controller Setting

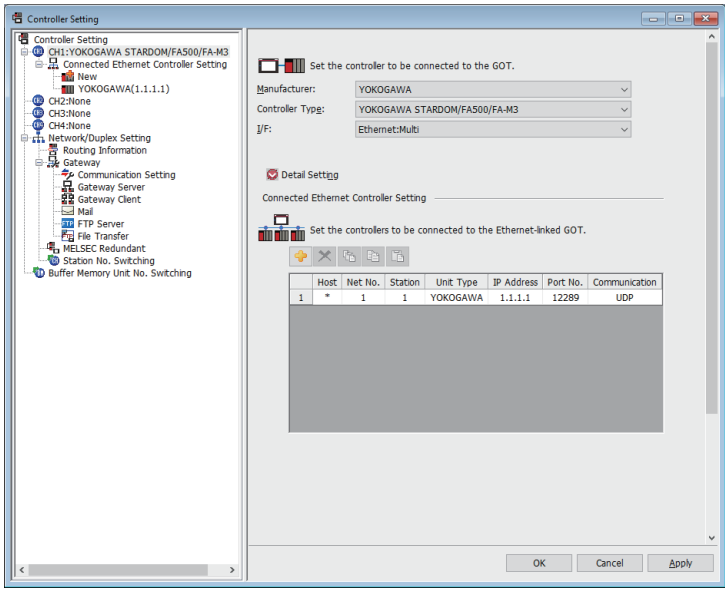

Item	Description	Set value
Host	The host is displayed. It refers to a station that can be connected without setting a station number. (The host is indicated with an asterisk (*).)	—
Net No.	Set the network No. of the connected Ethernet equipment. (Default: 1)	1 to 239
Station *3	Set the station No. of the connected Ethernet equipment. (Default: 1)	1 to 64
Unit Type	YOKOGAWA (fixed)	YOKOGAWA (fixed)
IP address *1	Set the IP address of the connected Ethernet equipment. (Default: 1.1.1.1)	PLC side IP address
Port No. *2	Set the port No. of the connected Ethernet equipment. (Default: 12289)	12289, 12291
Communication format *1	Select a communication protocol. (Default: UDP)	UDP, TCP

*1 Set the same IP address and communication format as those of the PLC side.

*2 Set the port No. of the host link service used on the PLC side.

*3 Set different values for [GOT Station] of [Detail Setting] and [Station] of [Connected Ethernet Controller Setting].

☞ Page 265 Communication detail settings

PLC side setting

Point

YOKOGAWA PLC

For details of YOKOGAWA PLCs, refer to the following manuals.

YOKOGAWA PLC user's Manual

Model name		Refer to
Ethernet interface module	F3LE01-5T	☞ Page 268 Switch setting on the Ethernet Interface Module (F3LE01-5T, F3LE11-0T)
	F3LE11-0T	
	F3LE12-0T	☞ Page 269 Switch setting on the Ethernet Interface Module (F3LE12-0T)
FA-M3	F3SP66 (built-in Ethernet interface) F3SP67 (built-in Ethernet interface)	☞ Page 270 Connecting to FA-M3, FA-M3V (built-in Ethernet interface)
FA-M3V	F3SP71-4N (built-in Ethernet interface) F3SP71-4S (built-in Ethernet interface) F3SP76-7S (built-in Ethernet interface)	

Connecting to Ethernet Interface Module

For the settings for connecting to the Ethernet Interface Module, refer to the following.

☞ Page 268 Switch setting on the Ethernet Interface Module (F3LE01-5T, F3LE11-0T)
☞ Page 269 Switch setting on the Ethernet Interface Module (F3LE12-0T)

Switch setting on the Ethernet Interface Module (F3LE01-5T, F3LE11-0T)

Set the switches accordingly.

Point

Switch setting

Set the switches before mounting the Ethernet Interface Module on the base unit.

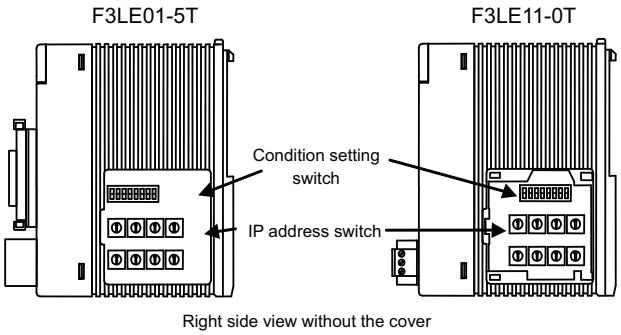

■IP address switch

Set the IP address with eight Hex rotary switches on the side of the base unit

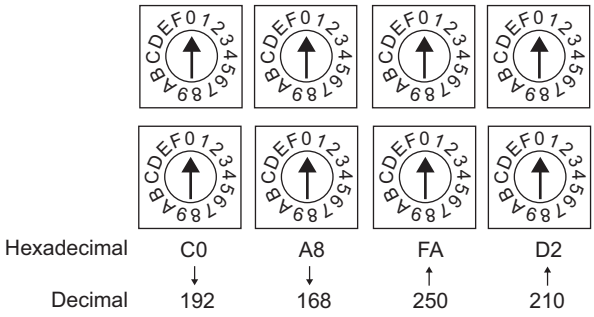

■Condition setting switch

Set the data format, write protection, line processing at TCP timeout error or operation mode with the DIP switch on the side of the base unit.

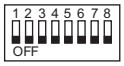

Switch No.	Description	Set value
1	Data code	OFF (ASCII)
2	Write protect	OFF (not protect)
3	Reserved	ON (not available), OFF (always)
4		
5		
6		
7	Line processing on TCP timeout *1	OFF (close the line)
8	Operation mode	OFF (normal operation)

*1 Applicable to only F3LE01-5T.

Switch setting on the Ethernet Interface Module (F3LE12-0T)

Set the switches accordingly.

Point

Switch setting

Set the switches before mounting the Ethernet Interface Module on the base unit.

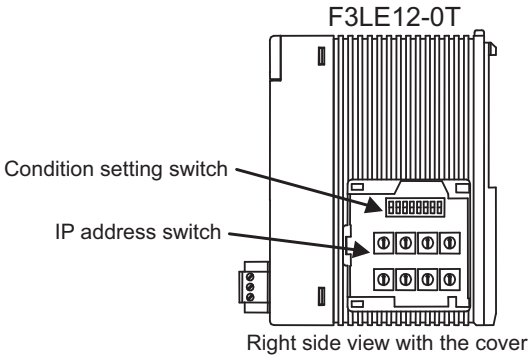

■IP address switch

Set the IP address with eight Hex rotary switches on the side of the base unit.

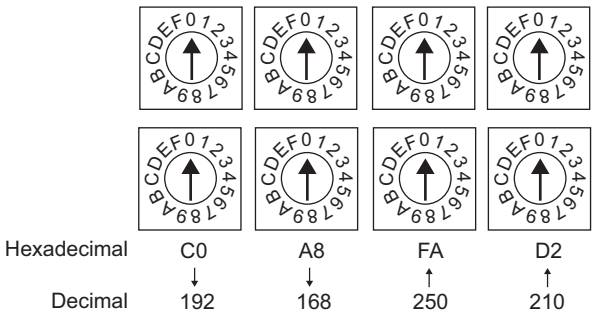

■Condition setting switch

Set the data format, write protection, or operation mode with the DIP switch on the side of the base unit.

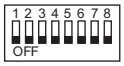

Switch No.	Description	Set value
1	Data code	OFF (ASCII)
2	Write protect	OFF (not protect)
3	Reserved	ON (not available), OFF (always)
4		
5		
6		
7		
8	Operation mode	OFF (normal operation)

Connecting to FA-M3, FA-M3V (built-in Ethernet interface)

In this section, FA-M3 and FA-M3V series represent F3SP66, F3SP67, F3SP71-4N, F3SP71-4S, and F3SP76-7S.

Project setting/configuration setting

Set the setting with software for programming apparatus.

Item	Set value	Description
IP address *1	0.0.0.0 to 255.255.255.255	Set the IP address of the connected Ethernet module.
Host link service A protocol *2 Port No.: 12289	0=TCP/IP *1 1=UDP/IP *1	Select the protocol to be used in the port A of the host link service via Ethernet.
Host link service A protocol command data type *2 Port No.: 12289	0=ASCII format	Select the command data type to be used in the port A of the host link service via Ethernet.
Host link service B protocol *2 Port No.: 12291	0=TCP/IP *1 1=UDP/IP *1	Select the protocol to be used in the port B of the host link service via Ethernet.
Host link service B protocol command data type *2 Port No.: 12291	0=ASCII format	Select the command data type to be used in the port B of the host link service via Ethernet.
Write protection *3	0 = Not protected 1 = Protected	Disables the write command to this module with the host link service via Ethernet.

*1 Adjust the settings with GOT settings.
☞ Page 266 Connected Ethernet Controller Setting

*2 For the port No. of the GOT, set the port No. of the host link service to be used.
☞ Page 266 Connected Ethernet Controller Setting

*3 Set this as necessary.

Precautions

Device range

When performing monitoring with the GOT connected to a YOKOGAWA PLC and setting devices for objects, use devices within the device range of the YOKOGAWA PLC.
When a device outside the range is set on an object, an indefinite value is displayed on the object.
(No error is displayed in the system alarm.)
For details on the device range of YOKOGAWA PLCs, refer to the following manual:
☞ Page 272 Settable Device Range

When setting IP address

Do not use "0" and "255" at the end of an IP address.
(Numbers of *.*.*.0 and *.*.*.255 are used by the system.)
The GOT may not monitor the controller correctly with the above numbers.
Consult with the administrator of the network before setting an IP address to the GOT and controller.

When connecting to multiple GOTs

■Setting Station

When connecting two or more GOTs in the Ethernet network, set each [Station] to the GOT.
☞ Page 266 Connected Ethernet Controller Setting

■Setting IP address

Do not use the IP address "192.168.0.18" when using multiple GOTs with the GOT 1000 series mixed.
A communication error may occur on the GOT with the IP address.

When connecting to the multiple network equipment (including GOT) in a segment

By increasing the network load, the transmission speed between the GOT and PLC may be reduced.
The following actions may improve the communication performance.

- Using a switching hub
- More high speed by 100BASE-TX (100Mbps)
- Reduction of the monitoring points on GOT

8.4 Settable Device Range

For the device setting dialog and range of devices usable in the GOT, refer to the following.

☞ Page 601 YOKOGAWA equipment ([YOKOGAWA STARDOM/FA500/FA-M3])

9 YOKOGAWA TEMPERATURE CONTROLLER

- Page 273 Connectable Model List
- Page 274 System Configuration
- Page 286 Connection Diagram
- Page 306 GOT Side Settings
- Page 308 Temperature Controller Side Setting
- Page 315 Settable Device Range
- Page 315 Precautions

9.1 Connectable Model List

The following table shows the connectable models.

Series	Model name	Clock	Communication Type	Connectable model	Refer to
GREEN	UT320	×	RS-232 RS-485	GT27 GT25 GT23	☞ Page 274 Connecting to GREEN Series
	UT321				
	UT350				
	UT351				
	UT420				
	UT450				
	UT520				
	UT550				
	UT551				
	UT750				
	UP350				
	UP351				
	UP550				
	UP750				
	UM330				
	UM331				
	UM350				
	UM351				
	US1000				
UT100	UT130	×	RS-232 RS-485	GT27 GT25 GT23	☞ Page 277 Connecting to UT100 Series
	UT150				
	UT152				
	UT155				
	UP150				
UT2000	UT2400	×	RS-232 RS-485	GT27 GT25 GT23	☞ Page 279 Connecting to UT2000 Series
	UT2800				
UTAdvanced	UT32A	×	RS-232 RS-485	GT27 GT25 GT23	☞ Page 281 Connecting to UTAdvanced Series
	UT35A				
	UT52A				
	UT55A				
	UT75A				
	UP32A				
	UP35A				
	UP55A				
	UM33A				

9.2 System Configuration

Connecting to GREEN Series

When using the RS232C/RS485 converter

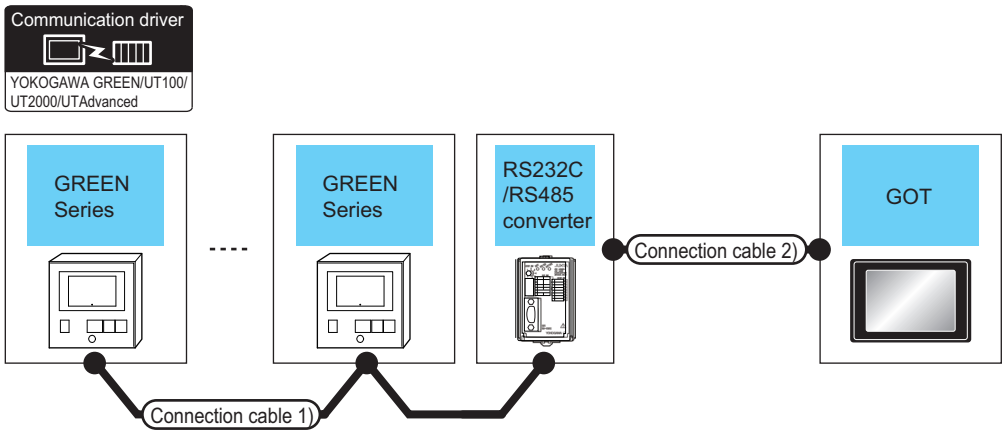

Temperature controller	Connection cable 1)		RS232C/RS485 converter*1		Connection cable 2)		GOT		Number of connectable equipment
Model name	Cable model Connection diagram number	Max. distance	Model name	Communication Type	Cable model Connection diagram number	Max. distance	Option device*4	Model	
UT320 UT321 UT350 UT351 UT420 UT450 UT520 UT550 UT551 UT750*2 UP350 UP351 UP550 UP750*2 UM330 UM331 UM350 UM351 US1000	User preparing Page 287 RS-485 connection diagram 1) (4-wire type)	1200m	ML2-□	RS-232	GT09-C30R20304-9S (3m) or User preparing Page 286 RS-232 connection diagram 1)	15m	- (Built into GOT)	GT27 GT25 GT23	Up to 31 temperature controllers for 1 GOT
							GT15-RS2-9P	GT27 GT25	
	User preparing Page 291 RS-485 connection diagram 5) (2-wire type)	1200m	ML2-□	RS-232	GT09-C30R20304-9S (3m) or User preparing Page 286 RS-232 connection diagram 1)	15m	- (Built into GOT)	GT27 GT25 GT23	
							GT15-RS2-9P	GT27 GT25	
UP750*3 UT750*3	User preparing Page 294 RS-485 connection diagram 9) (2-wire type)	1200m	ML2-□	RS-232	GT09-C30R20304-9S (3m) or User preparing Page 286 RS-232 connection diagram 1)	15m	- (Built into GOT)	GT27 GT25 GT23	
							GT15-RS2-9P	GT27 GT25	

*1 Product manufactured by YOKOGAWA Electric Corporation. For details of the product, contact Yokogawa Electric Corporation.
*2 Connect the connection cable 1) to the standard RS-485 communication interface.
*3 Connect the connection cable 1) to the high performance RS-485 communication interface.
*4 GT25-W, GT2505-V does not support the option device.

When connecting directly

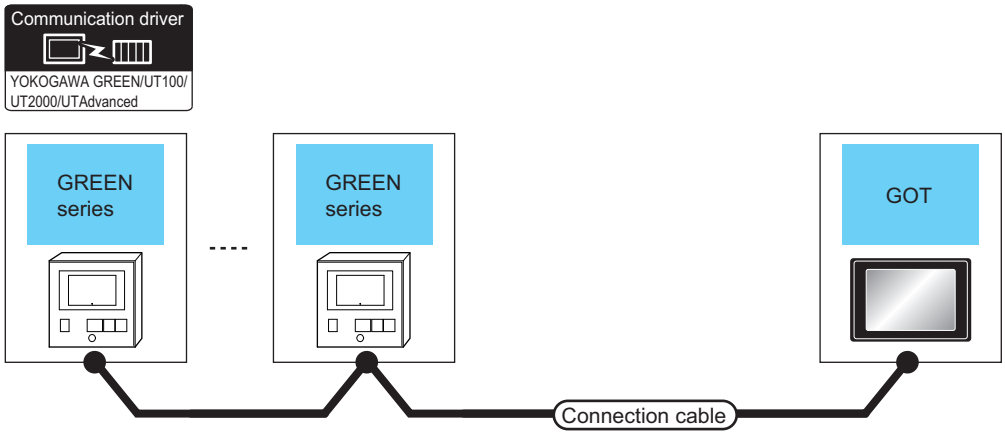

Temperature controller		Connection cable		GOT		Number of connectable equipment
Model name	Communication Type	Cable model Connection diagram number	Max. distance	Option device	Model	
UT320 UT321 UT350 UT351 UT420 UT450 UT520 UT550 UT551 UT750*1 UP350 UP351 UP550 UP750*1 UM330 UM331 UM350 UM351 US100	RS-485	GT09-C30R40303-6T (3m) GT09-C100R40303-6T (10m) GT09-C200R40303-6T (20m) GT09-C300R40303-6T (30m) or User preparing Page 289 RS-485 connection diagram 3) (4-wire type)	1200m	- (Built into GOT)	GT27 GT25 GT23	Up to the following number of temperature controllers for 1 GOT GT16, GT15: 31 GT11: 10
				GT15-RS4-9S	GT27 GT25 *4*5	
		User preparing Page 302 RS-485 connection diagram 20) (2-wire type)	1200m	- (Built into GOT)	GT27 GT25	
		User preparing Page 288 RS-485 connection diagram 2) (4-wire type)	1200m	FA-LTBGT2R4CBL05 (0.5m)*3 FA-LTBGT2R4CBL10 (1m)*3 FA-LTBGT2R4CBL20 (2m)*3	GT27 GT25 GT23 *5	
		User preparing Page 291 RS-485 connection diagram 6) (2-wire type)				
		User preparing Page 290 RS-485 connection diagram 4) (4-wire type)	1200m	GT15-RS4-TE	GT27 GT25 *4*5	
		User preparing Page 293 RS-485 connection diagram 8) (2-wire type)				
		User preparing Page 303 RS-485 connection diagram 23) (4-wire type)	1200m	GT14-RS2T4-9P *6	GT25 *7	
UP750*2 UT750*2	RS-485	User preparing Page 302 RS-485 connection diagram 21) (2-wire type)	1200m	- (Built into GOT)	GT27 GT25	
		User preparing Page 292 RS-485 connection diagram 7) (2-wire type)	1200m	FA-LTBGT2R4CBL05 (0.5m)*3 FA-LTBGT2R4CBL10 (1m)*3 FA-LTBGT2R4CBL20 (2m)*3	GT27 GT25 GT23 *5	
		User preparing Page 294 RS-485 connection diagram 10) (2-wire type)	1200m	GT15-RS4-TE	GT27 GT25 *4*5	

*1 Connect the connection cable to the standard RS-485 communication interface.
*2 Connect the connection cable to the high performance RS-485 communication interface.
*3 Product manufactured by MITSUBISHI ELECTRIC ENGINEERING COMPANY LIMITED.For details of the product, contact MITSUBISHI ELECTRIC ENGINEERING COMPANY LIMITED.
*4 Not available to GT25-W.
*5 Not available to GT2505-V.
*6 Connect it to the RS-232 interface (built in the GOT).
*7 Only available to GT2505-V.

Connecting to UT100 Series

When using the RS232C/RS485 converter

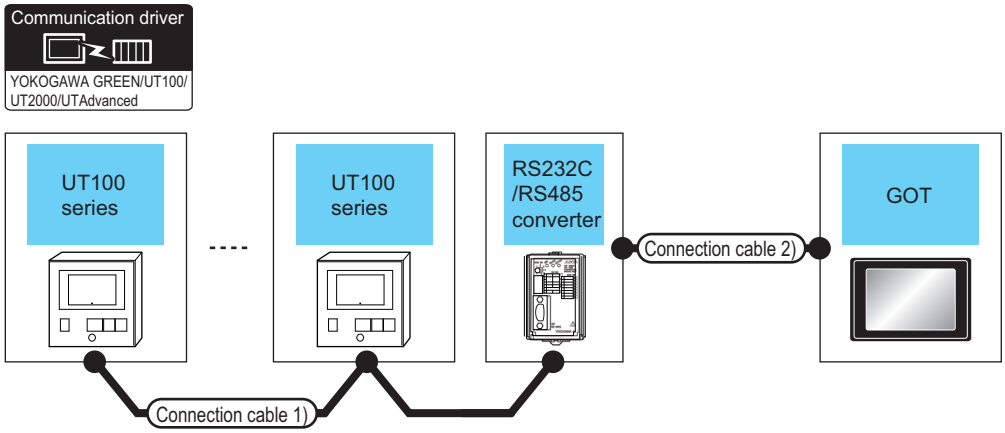

Temperature controller	Connection cable 1)		RS232C/RS485 converter*1		Connection cable 2)		GOT		Number of connectable equipment
Series	Cable model Connection diagram number	Max. distance	Model name	Communication Type	Cable model Connection diagram number	Max. distance	Option device*2	Model	
UT100	User preparing Page 294 RS-485 connection diagram 9)	1200m	ML2-□	RS-232	User preparing Page 286 RS-232 connection diagram 1)	15m	- (Built into GOT)	GT27 GT25 GT23	31 temperature controllers for 1 GOT
							GT15-RS2-9P	GT27 GT25	

*1 Product manufactured by YOKOGAWA Electric Corporation.For details of the product, contact Yokogawa Electric Corporation.
*2 GT25-W, GT2505-V does not support the option device.

When connecting directly

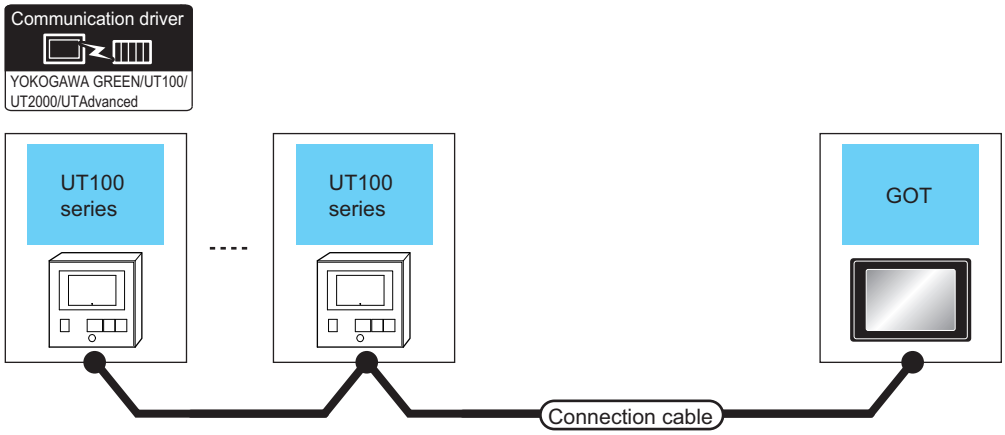

Temperature controller		Connection cable		GOT		Number of connectable equipment
Series	Communication Type	Cable model Connection diagram number	Max. distance	Option device*2*3	Model	
UT100	RS-485	User preparing Page 302 RS-485 connection diagram 21) (2-wire type)	1200m	- (Built into GOT)	GT27 GT25	Up to 31 temperature controllers for 1 GOT
		User preparing Page 292 RS-485 connection diagram 7) (2-wire type)	1200m	FA-LTBGT2R4CBL05(0.5m)*1 FA-LTBGT2R4CBL10(1m)*1 FA-LTBGT2R4CBL20(2m)*1	GT27 GT25 GT23	
		User preparing Page 294 RS-485 connection diagram 10) (2-wire type)	1200m	GT15-RS4-TE	GT27 GT25	

*1 Product manufactured by MITSUBISHI ELECTRIC ENGINEERING COMPANY LIMITED.For details of the product, contact MITSUBISHI ELECTRIC ENGINEERING COMPANY LIMITED.

*2 GT25-W is not compatible to the option devices other than FA-LTBGT2R4CBL□□.

*3 GT2505-V does not support the option device.

Connecting to UT2000 Series

When using the RS232C/RS485 converter

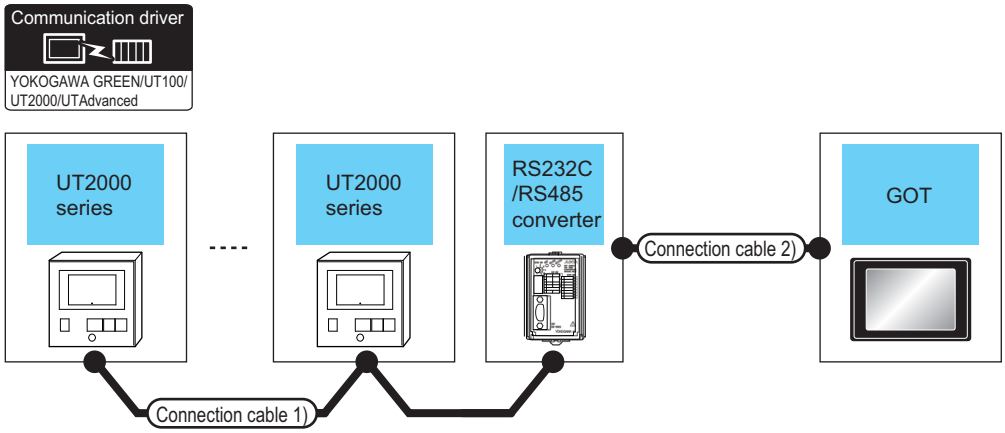

Temperature controller	Connection cable 1)		RS232C/RS485 converter*1		Connection cable 2)		GOT		Number of connectable equipment
Series	Cable model Connection diagram number	Max. distance	Model name	Communication Type	Cable model Connection diagram number	Max. distance	Option device*2	Model	
UT2000	User preparing Page 295 RS-485 connection diagram 12)	1200m	ML2-□	RS-232	GT09-C30R20304-9S (3m) or User preparing Page 286 RS-232 connection diagram 1)	15m	- (Built into GOT)	GT27 GT25 GT23	Up to 16 temperature controllers for 1 GOT
							GT15-RS2-9P	GT27 GT25	

*1 Product manufactured by YOKOGAWA Electric Corporation.For details of the product, contact Yokogawa Electric Corporation.
*2 GT25-W, GT2505-V does not support the option device.

When connecting directly

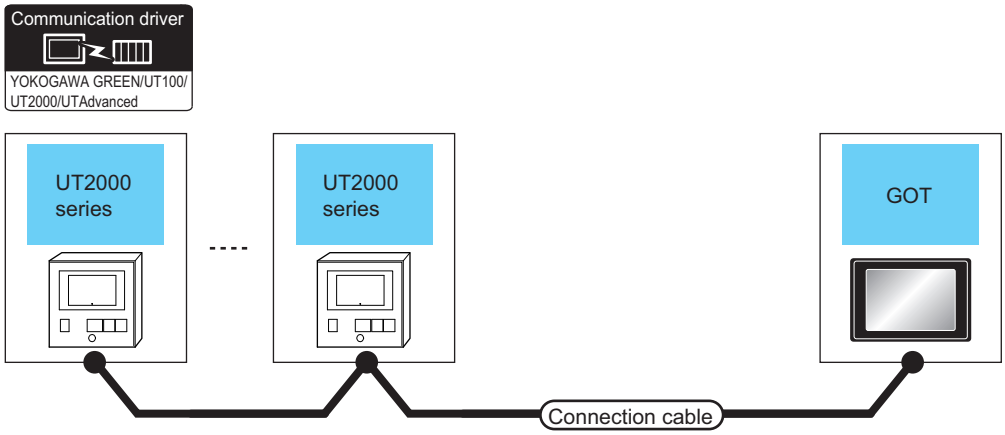

Temperature controller		Connection cable		GOT		Number of connectable equipment
Series	Communication Type	Cable model Connection diagram number	Max. distance	Option device	Model	
UT2000	RS-485	GT09-C30R40304-6T (3m) GT09-C100R40304-6T (10m) GT09-C200R40304-6T (20m) GT09-C300R40304-6T (30m) or User preparing Page 296 RS-485 connection diagram 13) (4-wire type)	1200m	- (Built into GOT)	GT27 GT25 GT23	Up to 16 temperature controllers for 1 GOT
				GT15-RS4-9S	GT27 GT25 *2*3	Up to 16 temperature controllers for 1 GOT
		User preparing Page 295 RS-485 connection diagram 11) (4-wire type)	1200m	FA-LTBGT2R4CBL05(0.5m)*1 FA-LTBGT2R4CBL10(1m)*1 FA-LTBGT2R4CBL20(2m)*1	GT27 GT25 GT23 *3	Up to 16 temperature controllers for 1 GOT
		User preparing Page 296 RS-485 connection diagram 14) (4-wire type)	1200m	GT15-RS4-TE	GT27 GT25 *2*3	
		User preparing Page 304 RS-485 connection diagram 24) (4-wire type)	1200m	GT14-RS2T4-9P *4	GT25 *5	

*1 Product manufactured by MITSUBISHI ELECTRIC ENGINEERING COMPANY LIMITED.For details of the product, contact MITSUBISHI ELECTRIC ENGINEERING COMPANY LIMITED.
*2 Not available to GT25-W.
*3 Not available to GT2505-V.
*4 Connect it to the RS-232 interface (built in the GOT).
*5 Only available to GT2505-V.

Connecting to UTAdvanced Series

When using the RS232C/RS485 converter

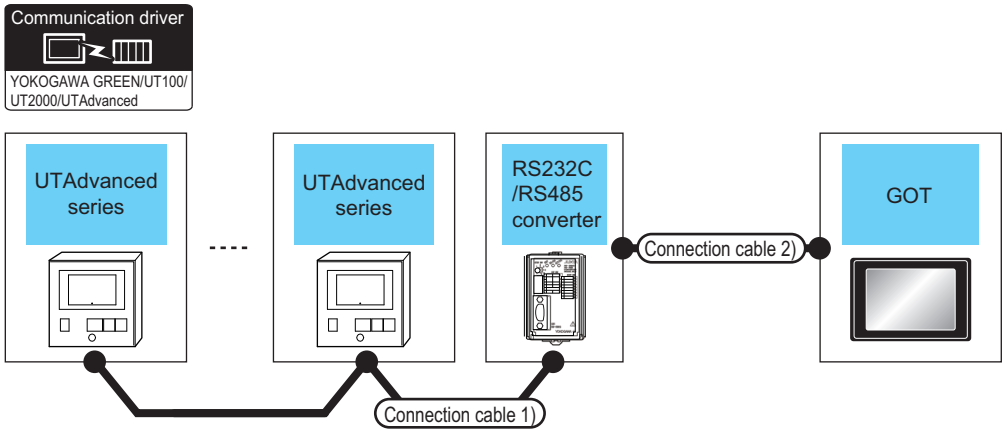

Temperature controller	Connection cable 1)		RS232C/RS485 converter *1		Connection cable 2)		GOT		Number of connectable equipment
Model	Cable model Connection diagram number	Max. distance	Model name	Communication Type	Cable model Connection diagram number	Max. distance	Option device *4	Model	
UT32A UT35A UT55A *2 UT75A UP32A UP35A UP55A *2 UM33A *2	User preparing Page 297 RS-485 connection diagram 15) (4-wire type)	1200m	ML2-□	RS-232	GT09-C30R20304-9S (3m) or User preparing Page 286 RS-232 connection diagram 1)	15m	- (Built into GOT)	GT27 GT25 GT23	Up to 31 temperature controllers for 1 GOT
							GT15-RS2-9P	GT27 GT25	
	User preparing Page 298 RS-485 connection diagram 16) (2-wire type)	1200m	ML2-□	RS-232	GT09-C30R20304-9S (3m) or User preparing Page 286 RS-232 connection diagram 1)	15m	- (Built into GOT)	GT27 GT25 GT23	Up to 31 temperature controllers for 1 GOT
							GT15-RS2-9P	GT27 GT25	
UT52A UT55A *3 UP55A *3 UM33A *3	User preparing Page 294 RS-485 connection diagram 9) (2-wire type)	1200m	ML2-□	RS-232	GT09-C30R20304-9S (3m) or User preparing Page 286 RS-232 connection diagram 1)	15m	- (Built into GOT)	GT27 GT25 GT23	Up to 31 temperature controllers for 1 GOT
							GT15-RS2-9P	GT27 GT25	

*1 Product manufactured by YOKOGAWA Electric Corporation. For details of the product, contact Yokogawa Electric Corporation.
*2 Only the products that meet the following conditions can be connected.

Model	Suffix code		Optional suffix code	Remark
	Function	Open network		
UT55A	1 or 2	-	Without "/LP"	Product with two RS-485 communication ports (4-wire type/2-wire type) and without the power supply for 24VDC sensor
	-	1	-	Product with the open network port of RS-485 communication (4-wire type/2-wire type)
UP55A	2	-	-	Product with two RS-485 communication ports (4-wire type/2-wire type) (Standard code model)
	Other than 3	-	-	Product without the additional contact output points (DO) and with the open network port of RS-485 communication (4-wire type/2-wire type) (Standard code model)
	-	-	With "/CH3"	Product with RS-485 communication port (4-wire type/2-wire type) specified in the E3 terminal area option (Detailed code model)
	-	-	With "/C4"	Product with the RS-485 communication port (4-wire type/2-wire type) specified in the E4 terminal area option (Detailed code model)
UM33A	1	-	Without "/LP"	Product with the RS-485 communication port (4-wire type/2-wire type) and without the power supply for 24 V DC sensor

*3 Only the products that meet the following conditions can be connected.

Model	Suffix code		Optional suffix code	Remark
	Function	Open network		
UT55A	1 or 2	-	With "/LP"	Product with two RS-485 communication ports (4-wire type/2-wire type) and with the power supply for 24 V DC sensor
UP55A	2	-	-	Product with two RS-485 communication ports (4-wire type/2-wire type) (Standard code model)
	-	-	With "/C4"	Product with the RS-485 communication port (4-wire type/2-wire type) specified in the E4 terminal area option (Detailed code model)
UM33A	1	-	With "/LP"	Product with the RS-485 communication port (2-wire type) and with the power supply for 24 V DC sensor

*4 GT25-W, GT2505-V does not support the option device.

When connecting directly

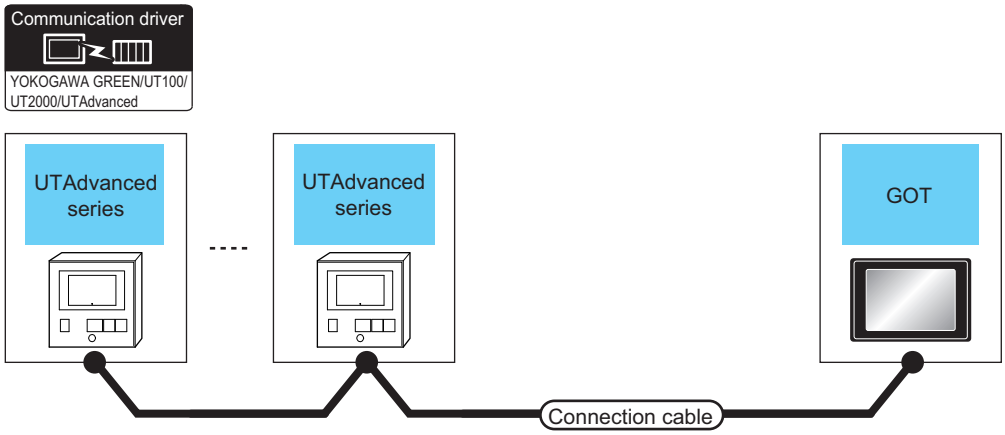

Temperature controller		Connection cable		GOT		Number of connectable equipment
Model	Communication Type	Cable model Connection diagram number	Max. distance	Option device	Model	
UT32A UT35A UT55A *1 UT75A UP32A UP35A UP55A *1	RS-485	GT09-C30R40303-6T(3m) GT09-C100R40303-6T(10m) GT09-C200R40303-6T(20m) GT09-C300R40303-6T(30m) or User preparing Page 289 RS-485 connection diagram 3) (4-wire type)	1200m	- (Built into GOT)	GT27 GT25 GT23	Up to 31 temperature controllers for 1 GOT
				GT15-RS4-9S	GT27 GT25 *4*5	
		User preparing Page 302 RS-485 connection diagram 20) (2-wire type)	1200m	- (Built into GOT)	GT27 GT25	
		User preparing Page 299 RS-485 connection diagram 17) (4-wire type)	1200m	FA-LTBGT2R4CBL05 (0.5m) *3 FA-LTBGT2R4CBL10 (1m) *3 FA-LTBGT2R4CBL20 (2m) *3	GT27 GT25 GT23 *5	
		User preparing Page 290 RS-485 connection diagram 4) (4-wire type)	1200m	GT15-RS4-TE	GT27 GT25 *4*5	
		User preparing Page 300 RS-485 connection diagram 18) (2-wire type)	1200m	FA-LTBGT2R4CBL05 (0.5m) *3 FA-LTBGT2R4CBL10 (1m) *3 FA-LTBGT2R4CBL20 (2m) *3	GT27 GT25 GT23 *5	
		User preparing Page 293 RS-485 connection diagram 8) (2-wire type)	1200m	GT15-RS4-TE	GT27 GT25 *4*5	
		User preparing Page 303 RS-485 connection diagram 23) (4-wire type)	1200m	GT14-RS2T4-9P *6	GT25 *7	

Temperature controller		Connection cable		GOT		Number of connectable equipment
Model	Communication Type	Cable model Connection diagram number	Max. distance	Option device	Model	
UM33A *1	RS-485	GT09-C30R40303-6T(3m) GT09-C100R40303-6T(10m) GT09-C200R40303-6T(20m) GT09-C300R40303-6T(30m) or User preparing Page 289 RS-485 connection diagram 3) (4-wire type)	1200m	- (Built into GOT)	GT27 GT25 GT23	Up to 31 temperature controllers for 1 GOT
				GT15-RS4-9S	GT27 GT25 *4*5	
		User preparing Page 290 RS-485 connection diagram 4) (4-wire type)	1200m	GT15-RS4-TE	GT27 GT25 *4*5	
		User preparing Page 304 RS-485 connection diagram 24) (4-wire type)	1200m	GT14-RS2T4-9P *6	GT25 *7	
UM33A *1	RS-485	User preparing Page 299 RS-485 connection diagram 17) (4-wire type)	1200m	FA-LTBGT2R4CBL05 (0.5m) *3 FA-LTBGT2R4CBL10 (1m) *3 FA-LTBGT2R4CBL20 (2m) *3	GT27 GT25 GT23 *5	Up to 31 temperature controllers for 1 GOT
UT52A UT55A *2 UP55A *2 UM33A *2	RS-485	User preparing Page 303 RS-485 connection diagram 22) (2-wire type)	1200m	- (Built into GOT)	GT27 GT25	
		User preparing Page 301 RS-485 connection diagram 19) (2-wire type)	1200m	FA-LTBGT2R4CBL05 (0.5m) *3 FA-LTBGT2R4CBL10 (1m) *3 FA-LTBGT2R4CBL20 (2m) *3	GT27 GT25 GT23 *5	
		User preparing Page 294 RS-485 connection diagram 10) (2-wire type)	1200m	GT15-RS4-TE	GT27 GT25 *4*5	

*1 Only the products that meet the following conditions can be connected.

Model	Suffix code		Optional suffix code	Remark
	Function	Open network		
UT55A	1 or 2	-	Without "/LP"	Product with two RS-485 communication ports (4-wire type/2-wire type) and without the power supply for 24 V DC sensor
	-	1	-	Product with the open network port of RS-485 communication (4-wire type/2-wire type)
UP55A	2	-	-	Product with two RS-485 communication ports (4-wire type/2-wire type) (Standard code model)
	Other than 3	1	-	Product without the additional contact output points (DO) and with the open network port of RS-485 communication (4-wire type/2-wire type) (Standard code model)
	-	-	With "/CH3"	Product with RS-485 communication port (4-wire type/2-wire type) specified in the E3 terminal area option (Detailed code model)
	-	-	With "/C4"	Product with the RS-485 communication port (4-wire type/2-wire type) specified in the E4 terminal area option (Detailed code model)
UM33A	1	-	Without "/LP"	Product with the RS-485 communication port (4-wire type/2-wire type) and without the power supply for 24 V DC sensor

*2 Only the products that meet the following conditions can be connected.

Model	Suffix code		Optional suffix code	Remark
	Function	Open network		
UT55A	1 or 2	-	With "/LP"	Product with two RS-485 communication ports (4-wire type/2-wire type) and with the power supply for 24VDC sensor
UP55A	2	-	-	Product with two RS-485 communication ports (4-wire type/2-wire type) (Standard code model)
	-	-	With "/C4"	Product with the RS-485 communication port (4-wire type/2-wire type) specified in the E4 terminal area option (Detailed code model)
UM33A	1	-	With "/LP"	Product with the RS-485 communication port (2-wire type) and with the power supply for 24 V DC sensor

*3 Product manufactured by MITSUBISHI ELECTRIC ENGINEERING COMPANY LIMITED. For details of the product, contact MITSUBISHI ELECTRIC ENGINEERING COMPANY LIMITED.
*4 Not available to GT25-W.
*5 Not available to GT2505-V.
*6 Connect it to the RS-232 interface (built in the GOT).
*7 Only available to GT2505-V.

9.3 Connection Diagram

The following diagram shows the connection between the GOT and the temperature controller.

RS-232 cable

Connection diagram

■RS-232 connection diagram 1)

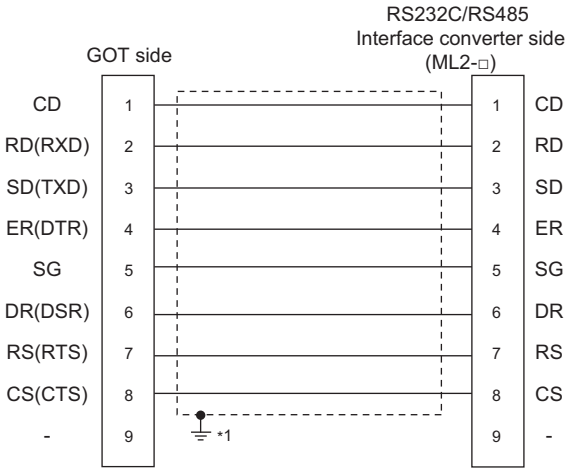

*1 Connect FG grounding to the appropriate part of a cable shield line.

Precautions when preparing a cable

■Cable length

The length of the RS-232 cable must be 15m or less.

■GOT side connector

For the GOT side connector, refer to the following.

☞ Page 58 GOT connector specifications

■YOKOGAWA temperature controller side connector

Use the connector compatible with the YOKOGAWA temperature controller side.

For details, refer to the user's manual of the YOKOGAWA temperature controller.

RS-485 cable

Connection diagram

■RS-485 connection diagram 1)

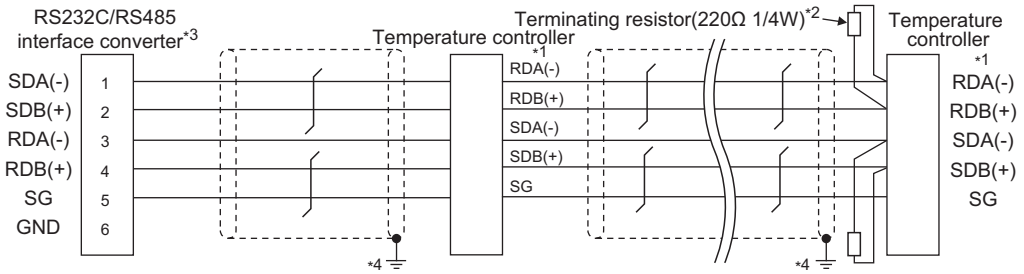

*1 Pin No. of temperature controller differs depending on the model. Refer to the following table.

Signal name	Model of temperature controller	
	GREEN Series UT/UP/UM	GREEN Series US
	Pin No.	Pin No.
RDA (-)	26	24
RDB (+)	25	23
SDB (+)	23	21
SDA (-)	24	22
SG	27	25

*2 Terminating resistor should be provided for a temperature controller which will be a terminal.
*3 Turn on the terminating switch on the RS232C/RS485 converter at the end.
*4 Connect FG grounding to the appropriate part of a cable shield line.

■RS-485 connection diagram 2)

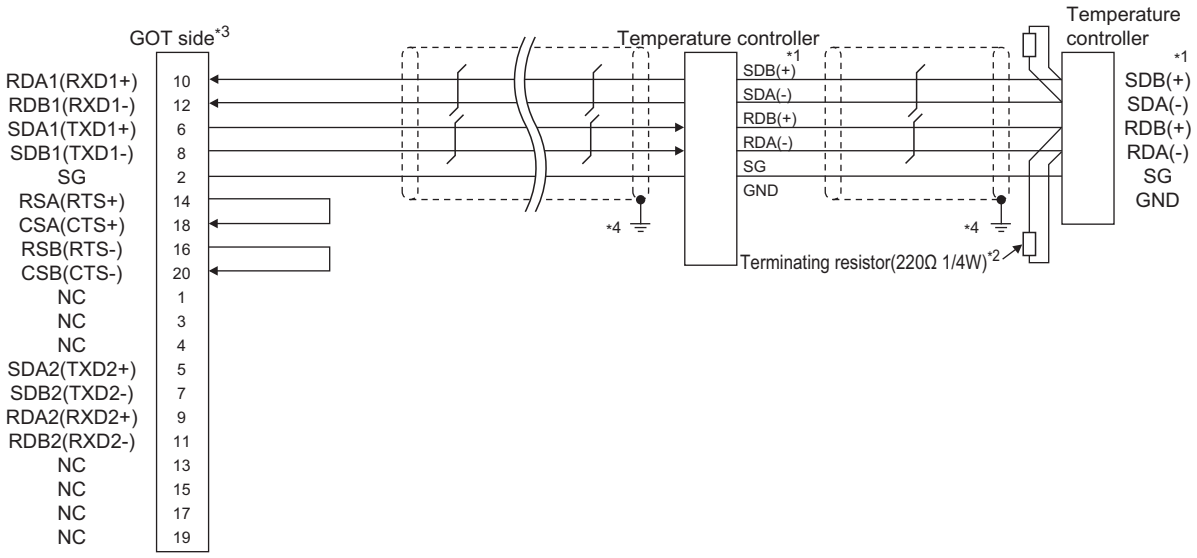

*1 Pin No. of temperature controller differs depending on the model.Refer to the following table.

Signal name	Model of temperature controller	
	GREEN Series UT/UP/UM	GREEN Series US
	Pin No.	Pin No.
SDB (+)	23	21
SDA (-)	24	22
RDB (+)	25	23
RDA (-)	26	24
SG	27	25

*2 Terminating resistor should be provided for a temperature controller which will be a terminal.

*3 Set the terminating resistor of GOT side which will be a terminal.

☞ Page 305 Connecting terminating resistors

*4 Connect FG grounding to the appropriate part of a cable shield line.

■RS-485 connection diagram 3)

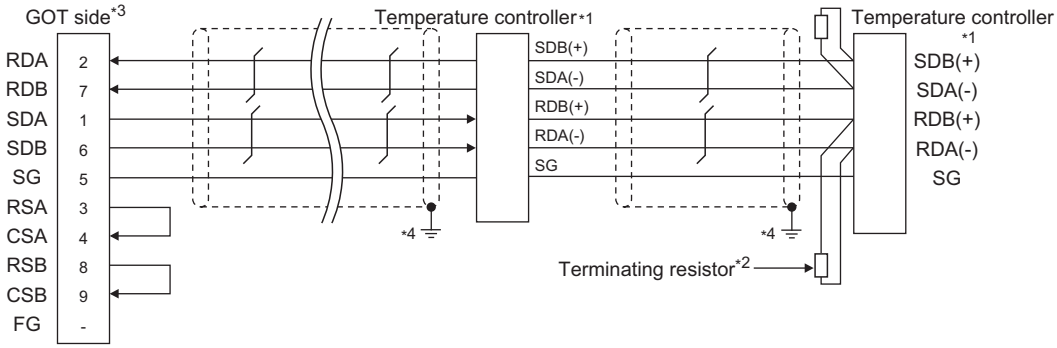

*1 Pin No. of temperature controller differs depending on the model.Refer to the following table.

Signal name	Model of temperature controller					
	GREEN Series UT/UP/UM	GREEN Series US	UTAdvanced Series			
			UT32A/UP32A/ UM33A	UT35A/UP35A/UT55A (product condition A)/ UP55A (product condition A)	UT55A (product condition B)/UP55A (product condition B)	UT75A
	Pin No.	Pin No.	Pin No.	Pin No.	Pin No.	Pin No.
SDB (+)	23	21	301	407	501	1
SDA (-)	24	22	302	408	502	2
RDB (+)	25	23	304	410	504	4
RDA (-)	26	24	305	411	505	5
SG	27	25	303	409	503	3

• For the product condition of UTAdvanced series, refer to the following table.

Model	Product condition	Suffix code		Optional suffix code	Remark
		Function	Open network		
UT55A	A	-	1	-	Product with the open network port of RS-485 communication (4-wire type/2-wire type)
	B	1 or 2	-	Without "/LP"	Product with two RS-485 communication ports (4-wire type/ 2-wire type) and without the power supply for 24VDC sensor
UP55A	A	Other than 3	1	-	Product without the additional contact output points (DO) and with the open network port of RS-485 communication (4-wire type/2-wire type) (Standard code model)
		-	-	With "/CH3"	Product with the RS-485 communication port (4-wire type/2-wire type) specified in the E3 terminal area option (Detailed code model)
	B	2	-	-	Product with two RS-485 communication ports (4-wire type/ 2-wire type) (Standard code model)
		-	-	With "/C4"	Product with the RS-485 communication port (4-wire type/2-wire type) specified in the E4 terminal area option (Detailed code model)

*2 Terminating resistor having 220 Ω 1/4W should be provided for a temperature controller which will be a terminal.

*3 For GT27 and GT25 (except for GT2505-V), set the terminating resistor to "Enable".
For GT2505-V, set the terminating resistor to "330 Ω".
☞ Page 305 Connecting terminating resistors

*4 Connect FG grounding to the appropriate part of a cable shield line.

■RS-485 connection diagram 4)

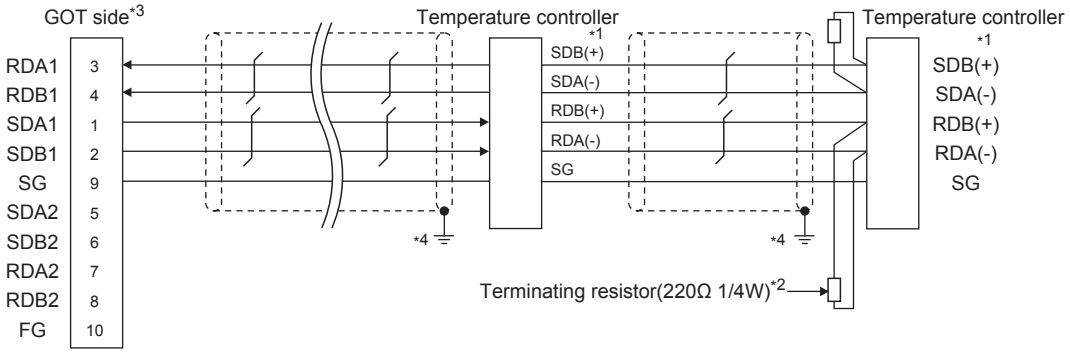

*1 Pin No. of temperature controller differs depending on the model. Refer to the following table.

Signal name	Model of temperature controller					
	GREEN Series UT/UP/UM	GREEN Series US	UTAdvanced Series			
			UT32A/UP32A/ UM33A	UT35A/UP35A/UT55A (product condition A)/ UP55A (product condition A)	UT55A (product condition B)/UP55A (product condition B)	UT75A
	Pin No.	Pin No.	Pin No.	Pin No.	Pin No.	Pin No.
SDB (+)	23	21	301	407	501	1
SDA (-)	24	22	302	408	502	2
RDB (+)	25	23	304	410	504	4
RDA (-)	26	24	305	411	505	5
SG	27	25	303	409	503	3

• For the product condition of UTAdvanced series, refer to the following table.

Model	Product condition	Suffix code		Optional suffix code	Remark
		Function	Open network		
UT55A	A	-	1	-	Product with the open network port of RS-485 communication (4-wire type/2-wire type)
	B	1 or 2	-	Without "/LP"	Product with two RS-485 communication ports (4-wire type/ 2-wire type) and without the power supply for 24VDC sensor
UP55A	A	Other than 3	1	-	Product without the additional contact output points (DO) and with the open network port of RS-485 communication (4-wire type/2-wire type) (Standard code model)
		-	-	With "/CH3"	Product with the RS-485 communication port (4-wire type/2-wire type) specified in the E3 terminal area option (Detailed code model)
	B	2	-	-	Product with two RS-485 communication ports (4-wire type/ 2-wire type) (Standard code model)
		-	-	With "/C4"	Product with the RS-485 communication port (4-wire type/2-wire type) specified in the E4 terminal area option (Detailed code model)

*2 Terminating resistor should be provided for a temperature controller which will be a terminal.

*3 Set the terminating resistor of GOT side which will be a terminal.

☞ Page 305 Connecting terminating resistors

*4 Connect FG grounding to the appropriate part of a cable shield line.

■RS-485 connection diagram 5)

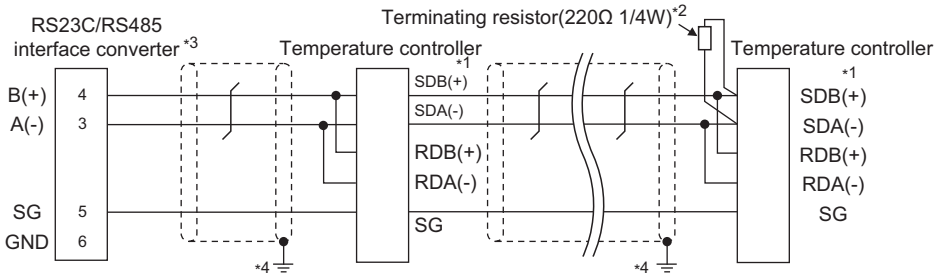

*1 Pin No. of temperature controller differs depending on the model.Refer to the following table.

Signal name	Model of temperature controller	
	GREEN Series UT/UP/UM	GREEN Series US
	Pin No.	Pin No.
SDB (+)	23	21
SDA (-)	24	22
RDB (+)	25	23
RDA (-)	26	24
SG	27	25

*2 Terminating resistor should be provided for a temperature controller which will be a terminal.
*3 Turn on the terminating switch on the RS232C/RS485 converter at the end.
*4 Connect FG grounding to the appropriate part of a cable shield line.

■RS-485 connection diagram 6)

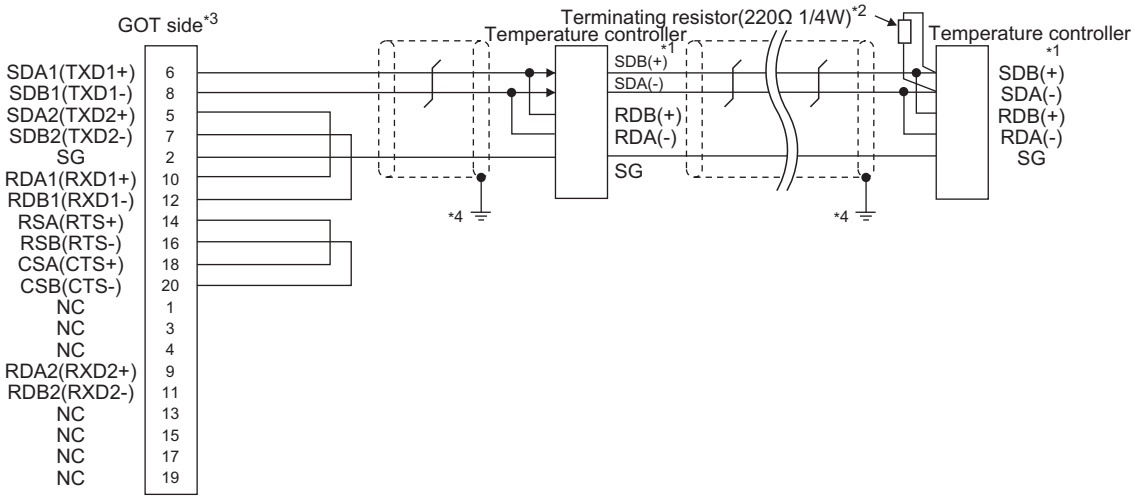

*1 Pin No. of temperature controller differs depending on the model.Refer to the following table.

Signal name	Model of temperature controller	
	GREEN Series UT/UP/UM	GREEN Series US
	Pin No.	Pin No.
SDB (+)	23	21
SDA (-)	24	22
RDB (+)	25	23
RDA (-)	26	24
SG	27	25

*2 Terminating resistor should be provided for a temperature controller which will be a terminal.
*3 Set the terminating resistor of GOT side which will be a terminal.
☞ Page 305 Connecting terminating resistors
*4 Connect FG grounding to the appropriate part of a cable shield line.

■RS-485 connection diagram 7)

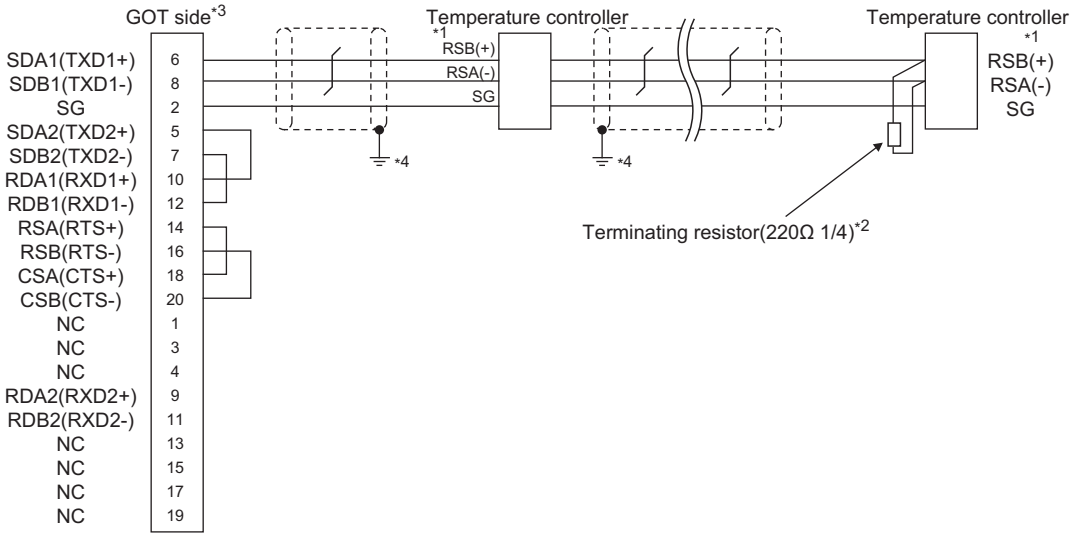

*1 Pin No. of temperature controller differs depending on the model.Refer to the following table.

Signal name	Model of temperature controller		
	GREEN Series UT750/UP750	UT100 Series UT130/UT150/UP150	UT100 Series UT152/UT155
	Pin No.	Pin No.	Pin No.
RSB (+)	28	3	26
RSA (-)	29	4	27
SG	30	5	28

*2 Terminating resistor should be provided for a temperature controller which will be a terminal.

*3 Set the terminating resistor of GOT side which will be a terminal.

☞ Page 305 Connecting terminating resistors

*4 Connect FG grounding to the appropriate part of a cable shield line.

■RS-485 connection diagram 8)

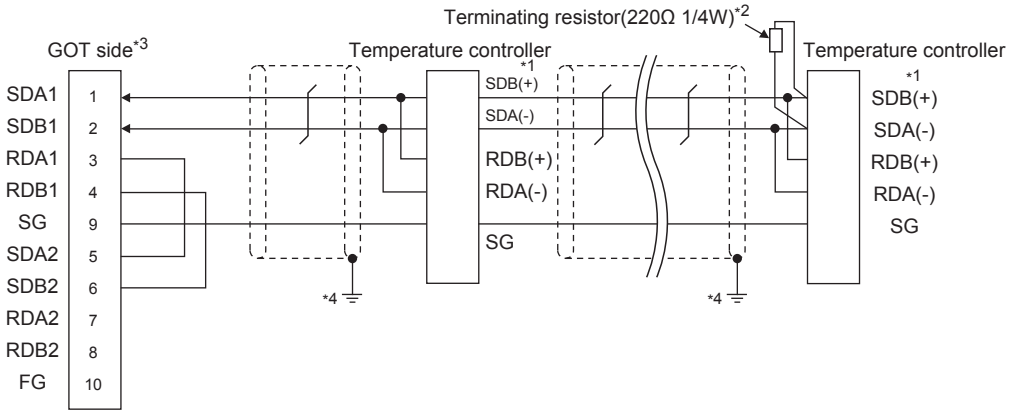

*1 Pin No. of temperature controller differs depending on the model.Refer to the following table.

Signal name	Model of temperature controller					
	GREEN Series UT/UP/UM	GREEN Series US	UTAdvanced Series			
			UT32A/ UP32A/ UM33A	UT35A/UP35A/UT55A (product condition A)/UP55A (product condition A)	UT55A (product condition B)/ UP55A (product condition B)	UT75A
	Pin No.	Pin No.	Pin No.	Pin No.	Pin No.	Pin No.
SDB (+)	23	21	301	407	501	1
SDA (-)	24	22	302	408	502	2
RDB (+)	25	23	304	410	504	4
RDA (-)	26	24	305	411	505	5
SG	27	25	303	409	503	3

• For the product condition of UTAdvanced series, refer to the following table.

Model	Product condition	Suffix code		Optional suffix code	Remark
		Function	Open network		
UT55A	A	-	1	-	Product with the open network port of RS485 communication (4-wire type/2-wire type)
	B	1 or 2	-	Without "/LP"	Product with two RS485 communication ports (4-wire type/2-wire type) and without the power supply for 24VDC sensor
UP55A	A	Other than 3	1	-	Product without the additional contact output points (DO) and with the open network port of RS485 communication (4-wire type/2-wire type) (Standard code model)
		-	-	With "/CH3"	Product with the RS485 communication port (4-wire type/2-wire type) specified in the E3 terminal area option (Detailed code model)
	B	2	-	-	Product with two RS485 communication ports (4-wire type/2-wire type) (Standard code model)
		-	-	With "/C4"	Product with the RS485 communication port (4-wire type/2-wire type) specified in the E4 terminal area option (Detailed code model)

*2 Terminating resistor should be provided for a temperature controller which will be a terminal.

*3 Set the terminating resistor of GOT side which will be a terminal.

☞ Page 305 Connecting terminating resistors

*4 Connect FG grounding to the appropriate part of a cable shield line.

■RS-485 connection diagram 9)

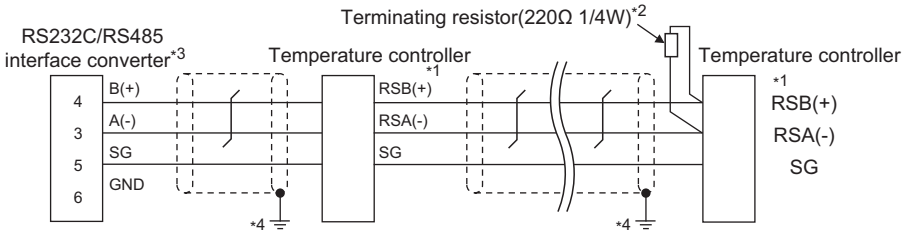

*1 Pin No. of temperature controller differs depending on the model.Refer to the following table.

Signal name	Model of temperature controller				
	GREEN Series UT750/UP750	UT100 Series UT130/UT150/UP150	UT100 Series UT152/UT155	UTAdvanced Series UT52A/UM33A	UTAdvanced Series UT55A/UP55A
	Pin No.	Pin No.	Pin No.	Pin No.	Pin No.
RSB (+)	28	3	26	301	501
RSA (-)	29	4	27	302	502
SG	30	5	28	303	503

*2 Terminating resistor should be provided for a temperature controller which will be a terminal.
*3 Turn on the terminating switch on the RS232C/RS485 converter at the end.
*4 Connect FG grounding to the appropriate part of a cable shield line.

■RS-485 connection diagram 10)

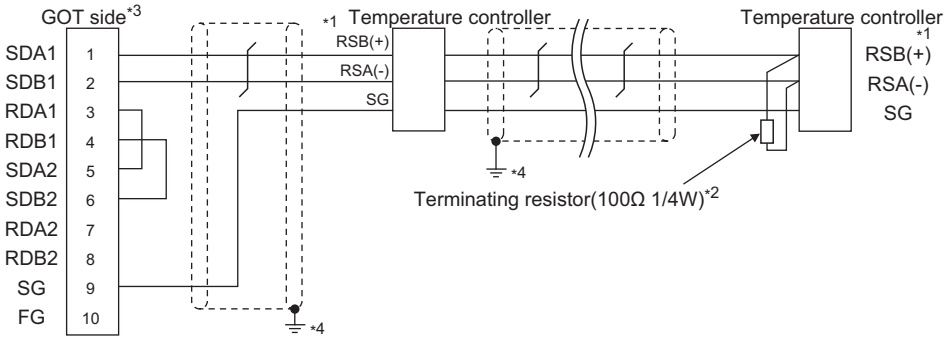

*1 Pin No. of temperature controller differs depending on the model. Refer to the following table.

Signal name	Model of temperature controller				
	GREEN Series UT750/UP750	UT100 Series UT130/UT150/UP150	UT100 Series UT152/UT155	UTAdvanced Series UT52A/UM33A	UTAdvanced Series UT55A/UP55A
	Pin No.	Pin No.	Pin No.	Pin No.	Pin No.
RSB (+)	28	3	26	301	501
RSA (-)	29	4	27	302	502
SG	30	5	28	303	503

*2 Terminating resistor should be provided for a temperature controller which will be a terminal.
*3 Set the terminating resistor of GOT side which will be a terminal.
☞ Page 305 Connecting terminating resistors
*4 Connect FG grounding to the appropriate part of a cable shield line.

■RS-485 connection diagram 11)

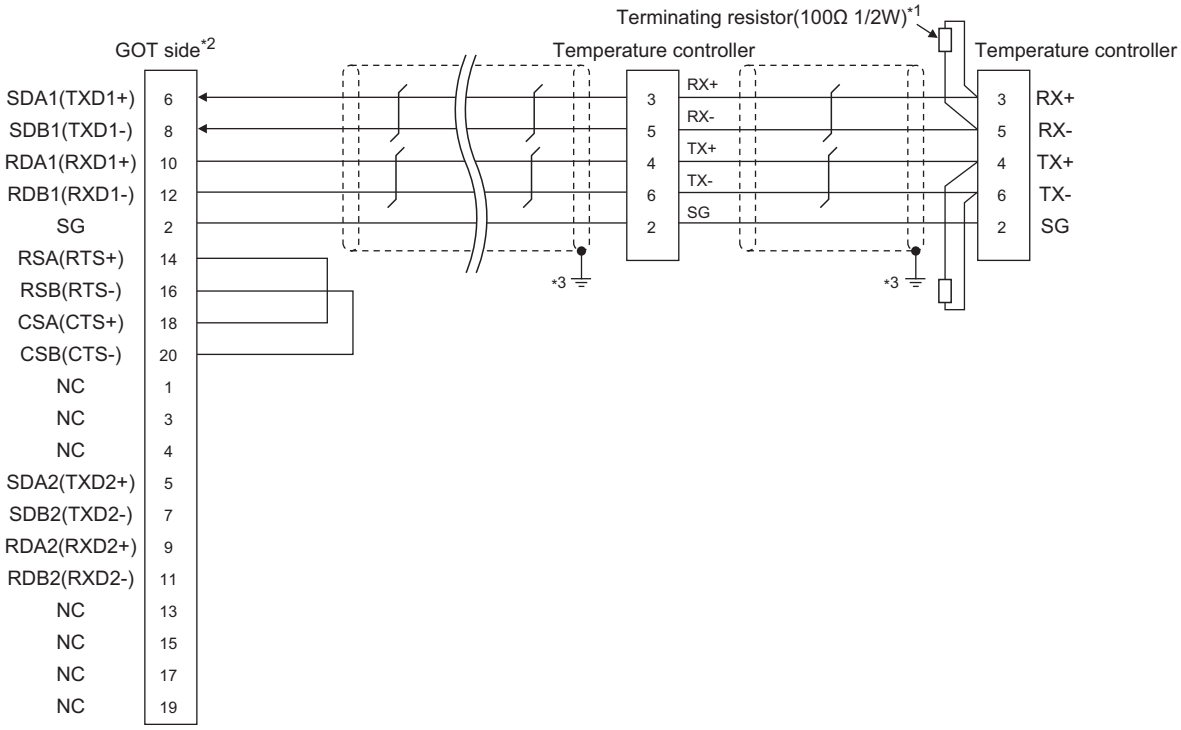

*1 Terminating resistor should be provided for a temperature controller which will be a terminal.

*2 Set the terminating resistor of GOT side which will be a terminal.

☞ Page 305 Connecting terminating resistors

*3 Connect FG grounding to the appropriate part of a cable shield line.

■RS-485 connection diagram 12)

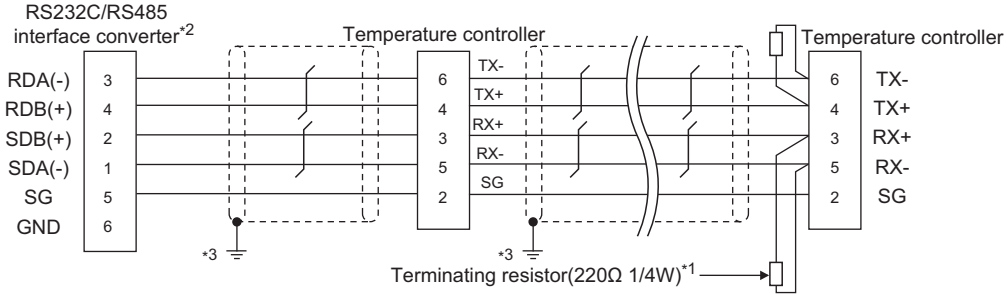

*1 Terminating resistor should be provided for a temperature controller which will be a terminal.

*2 Turn on the terminating switch on the RS232C/RS485 converter at the end.

*3 Connect FG grounding to the appropriate part of a cable shield line.

■RS-485 connection diagram 13)

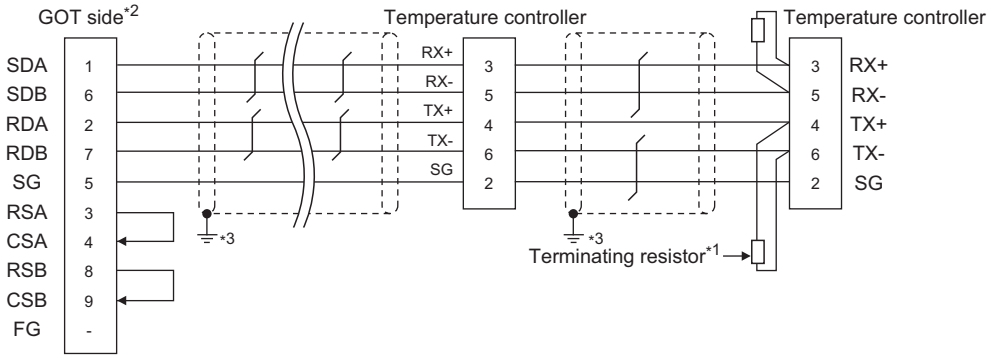

*1 Terminating resistor having 100 Ω 1/2W should be provided for a temperature controller which will be a terminal.

*2 For GT27 and GT25 (except for GT2505-V), set the terminating resistor to "Enable".
For GT2505-V, set the terminating resistor to "330 Ω".
☞ Page 305 Connecting terminating resistors

*3 Connect FG grounding to the appropriate part of a cable shield line.

■RS-485 connection diagram 14)

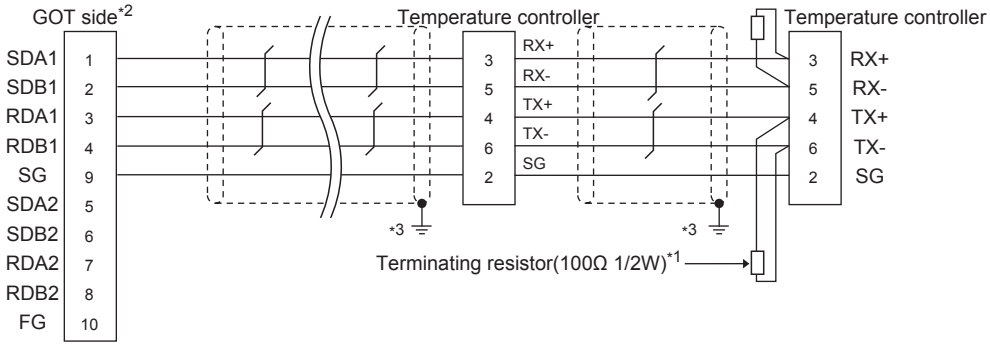

*1 Terminating resistor should be provided for a temperature controller which will be a terminal.

*2 Set the terminating resistor of GOT side which will be a terminal.
☞ Page 305 Connecting terminating resistors

*3 Connect FG grounding to the appropriate part of a cable shield line.

■RS-485 connection diagram 15)

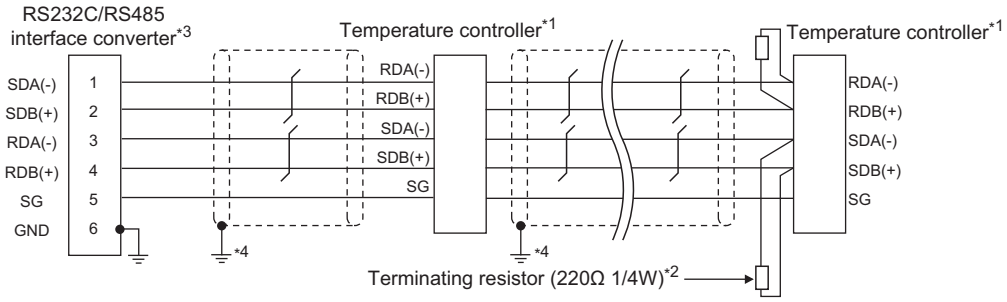

*1 Pin No. of temperature controller differs depending on the model. Refer to the following table.

Signal name	Model of temperature controller			
	UTAdvanced Series			
	UT32A/ UP32A/ UM33A	UT35A/UP35A/UT55A (product condition A)/UP55A (product condition A)	UT55A (product condition B)/UP55A (product condition B)	UT75A
	Pin No.	Pin No.	Pin No.	Pin No.
SDB (+)	301	407	501	1
SDA (-)	302	408	502	2
RDB (+)	304	410	504	4
RDA (-)	305	411	505	5
SG	303	409	503	3

• For the product condition of UTAdvanced series, refer to the following table.

Model	Product condition	Suffix code		Optional suffix code	Remark
		Function	Open network		
UT55A	A	-	1	-	Product with the open network port of RS-485 communication (4-wire type/2-wire type)
	B	1 or 2	-	Without "/LP"	Product with two RS-485 communication ports (4-wire type/ 2-wire type) and without the power supply for 24VDC sensor
UP55A	A	Other than 3	1	-	Product without the additional contact output points (DO) and with the open network port of RS-485 communication (4-wire type/2-wire type) (Standard code model)
		-	-	With "/CH3"	Product with the RS-485 communication port (4-wire type/2-wire type) specified in the E3 terminal area option (Detailed code model)
	B	2	-	-	Product with two RS-485 communication ports (4-wire type/ 2-wire type) (Standard code model)
		-	-	With "/C4"	Product with the RS-485 communication port (4-wire type/2-wire type) specified in the E4 terminal area option (Detailed code model)

*2 Terminating resistor should be provided for a temperature controller which will be a terminal.
*3 Turn on the terminating switch on the RS232C/RS485 converter at the end.
*4 Connect FG grounding to the appropriate part of a cable shield line.

■RS-485 connection diagram 16)

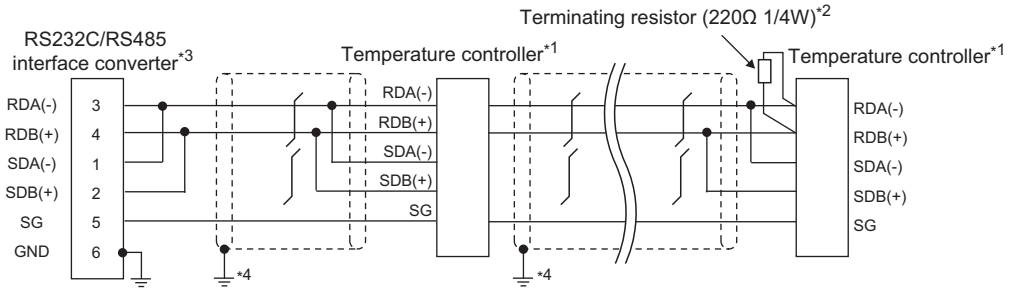

*1 Pin No. of temperature controller differs depending on the model. Refer to the following table.

Signal name	Model of temperature controller			
	UTAdvanced Series			
	UT32A/UP32A/UM33A	UT35A/UP35A/UT55A (product condition A)/UP55A (product condition A)	UT55A (product condition B)/UP55A (product condition B)	UT75A
	Pin No.	Pin No.	Pin No.	Pin No.
SDB (+)	301	407	501	1
SDA (-)	302	408	502	2
RDB (+)	304	410	504	4
RDA (-)	305	411	505	5
SG	303	409	503	3

• For the product condition of UTAdvanced series, refer to the following table.

Model	Product condition	Suffix code		Optional suffix code	Remark
		Function	Open network		
UT55A	A	-	1	-	Product with the open network port of RS-485 communication (4-wire type/2-wire type)
	B	1 or 2	-	Without "/LP"	Product with two RS-485 communication ports (4-wire type/2-wire type) and without the power supply for 24VDC sensor
UP55A	A	Other than 3	1	-	Product without the additional contact output points (DO) and with the open network port of RS-485 communication (4-wire type/2-wire type) (Standard code model)
		-	-	With "/CH3"	Product with the RS-485 communication port (4-wire type/2-wire type) specified in the E3 terminal area option (Detailed code model)
	B	2	-	-	Product with two RS-485 communication ports (4-wire type/2-wire type) (Standard code model)
		-	-	With "/C4"	Product with the RS-485 communication port (4-wire type/2-wire type) specified in the E4 terminal area option (Detailed code model)

*2 Terminating resistor should be provided for a temperature controller which will be a terminal.
*3 Turn on the terminating switch on the RS232C/RS485 converter at the end.
*4 Connect FG grounding to the appropriate part of a cable shield line.

■RS-485 connection diagram 17)

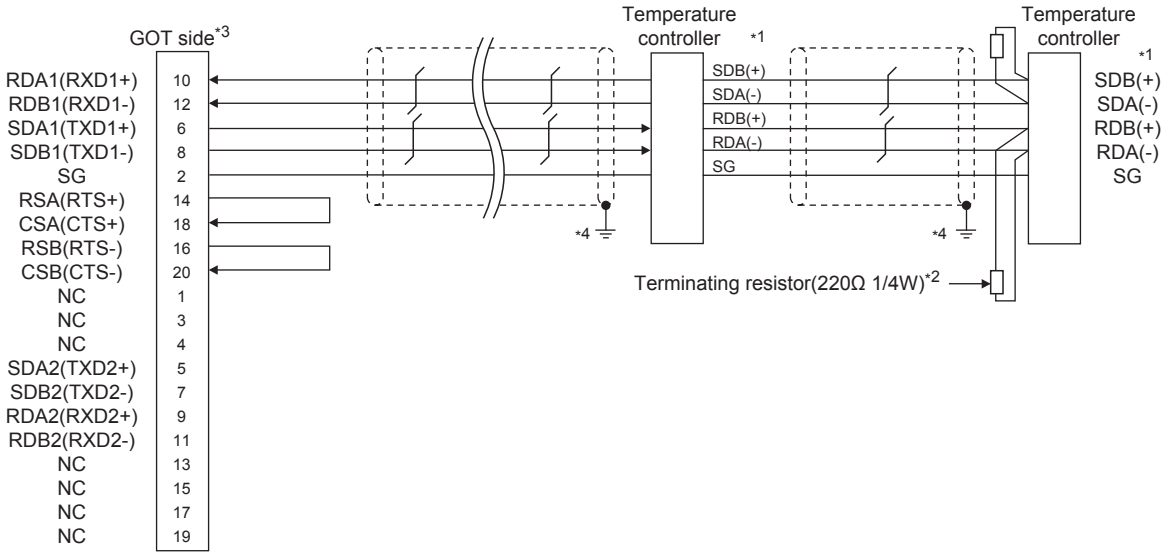

*1 Pin No. of temperature controller differs depending on the model. Refer to the following table.

Signal name	Model of temperature controller					
	GREEN Series UT/UP/ UM	GREEN Series US	UTAdvanced Series			
			UT32A/UP32A/ UM33A	UT35A/UP35A/UT55A (product condition A)/ UP55A (product condition A)	UT55A (product condition B)/UP55A (product condition B)	UT75A
	Pin No.	Pin No.	Pin No.	Pin No.	Pin No.	Pin No.
SDB (+)	23	21	301	407	501	1
SDA (-)	24	22	302	408	502	2
RDB (+)	25	23	304	410	504	4
RDA (-)	26	24	305	411	505	5
SG	27	25	303	409	503	3

• For the product condition of UTAdvanced series, refer to the following table.

Model	Product condition	Suffix code		Optional suffix code	Remark
		Function	Open network		
UT55A	A	-	1	-	Product with the open network port of RS-485 communication (4-wire type/2-wire type)
	B	1 or 2	-	Without "/LP"	Product with two RS-485 communication ports (4-wire type/ 2-wire type) and without the power supply for 24VDC sensor
UP55A	A	Other than 3	1	-	Product without the additional contact output points (DO) and with the open network port of RS-485 communication (4-wire type/2-wire type) (Standard code model)
		-	-	With "/CH3"	Product with the RS-485 communication port (4-wire type/2-wire type) specified in the E3 terminal area option (Detailed code model)
	B	2	-	-	Product with two RS-485 communication ports (4-wire type/ 2-wire type) (Standard code model)
		-	-	With "/C4"	Product with the RS-485 communication port (4-wire type/2-wire type) specified in the E4 terminal area option (Detailed code model)

*2 Terminating resistor should be provided for a GOT and a temperature controller which will be a terminal.

*3 Set the terminating resistor of GOT side which will be a terminal.

☞ Page 305 Connecting terminating resistors

*4 Connect FG grounding to the appropriate part of a cable shield line.

■RS-485 connection diagram 18)

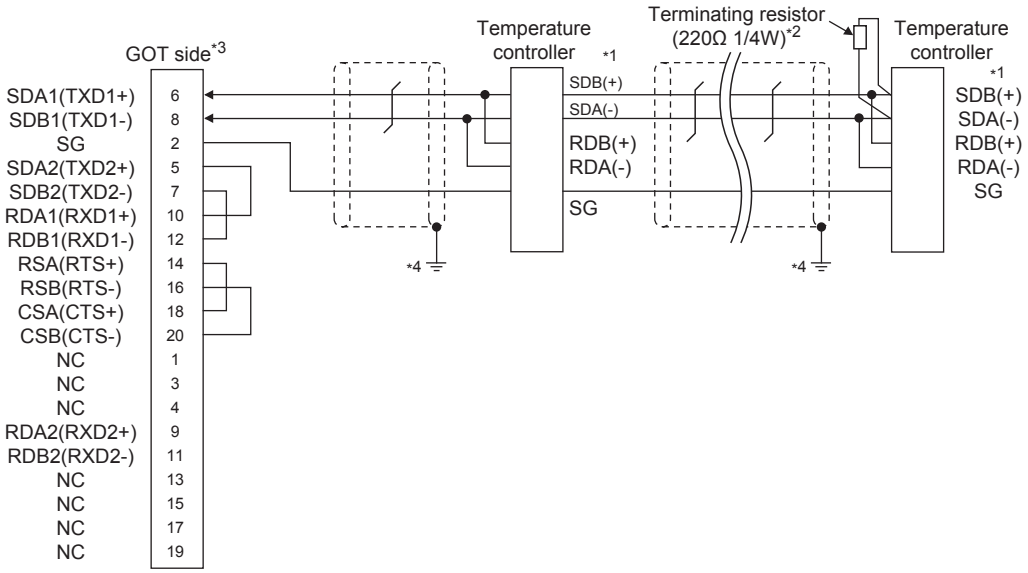

*1 Pin No. of temperature controller differs depending on the model. Refer to the following table.

Signal name	Model of temperature controller					
	GREEN Series UT/UP/ UM	GREEN Series US	UTAdvanced Series			
			UT32A/UP32A	UT35A/UP35A/UT55A (product condition A)/ UP55A (product condition A)	UT55A (product condition B)/UP55A (product condition B)	UT75A
	Pin No.	Pin No.	Pin No.	Pin No.	Pin No.	Pin No.
SDB (+)	23	21	301	407	501	1
SDA (-)	24	22	302	408	502	2
RDB (+)	25	23	304	410	504	4
RDA (-)	26	24	305	411	505	5
SG	27	25	303	409	503	3

• For the product condition of UTAdvanced series, refer to the following table.

Model	Product condition	Suffix code		Optional suffix code	Remark
		Function	Open network		
UT55A	A	-	1	-	Product with the open network port of RS-485 communication (4-wire type/2-wire type)
	B	1 or 2	-	Without "/LP"	Product with two RS-485 communication ports (4-wire type/2-wire type) and without the power supply for 24VDC sensor
UP55A	A	Other than 3	1	-	Product without the additional contact output points (DO) and with the open network port of RS-485 communication (4-wire type/2-wire type) (Standard code model)
		-	-	With "/CH3"	Product with the RS-485 communication port (4-wire type/2-wire type) specified in the E3 terminal area option (Detailed code model)
	B	2	-	-	Product with two RS-485 communication ports (4-wire type/2-wire type) (Standard code model)
		-	-	With "/C4"	Product with the RS-485 communication port (4-wire type/2-wire type) specified in the E4 terminal area option (Detailed code model)

*2 Terminating resistor should be provided for a GOT and a temperature controller which will be a terminal.

*3 Set the terminating resistor of GOT side which will be a terminal.

☞ Page 305 Connecting terminating resistors

*4 Connect FG grounding to the appropriate part of a cable shield line.

■RS-485 connection diagram 19)

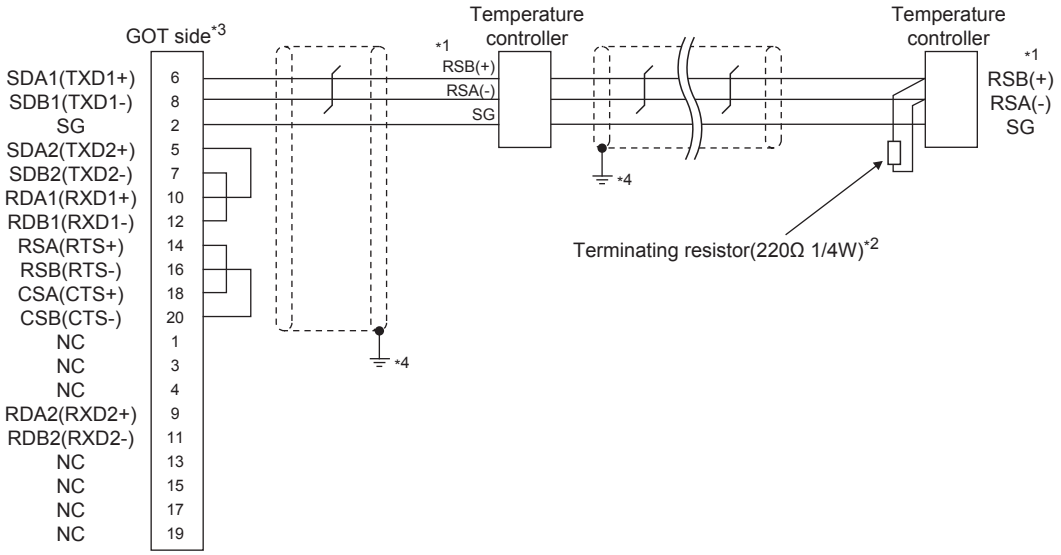

*1 Pin No. of temperature controller differs depending on the model. Refer to the following table.

Signal name	Model of temperature controller					
	GREEN Series UT/UP/ UM	GREEN Series US	UTAdvanced Series			
			UT32A/UP32A/ UM33A	UT35A/UP35A/UT55A (product condition A)/ UP55A (product condition A)	UT55A (product condition B)/UP55A (product condition B)	UT75A
	Pin No.	Pin No.	Pin No.	Pin No.	Pin No.	Pin No.
SDB (+)	23	21	301	407	501	1
SDA (-)	24	22	302	408	502	2
RDB (+)	25	23	304	410	504	4
RDA (-)	26	24	305	411	505	5
SG	27	25	303	409	503	3

*2 Terminating resistor should be provided for a GOT and a temperature controller which will be a terminal.

*3 Set the terminating resistor of GOT side which will be a terminal.
☞ Page 305 Connecting terminating resistors

*4 Connect FG grounding to the appropriate part of a cable shield line.

■RS-485 connection diagram 20)

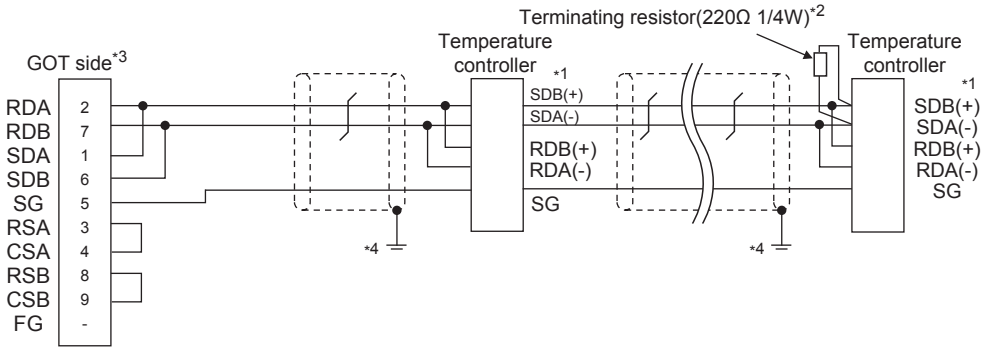

*1 Pin No. of temperature controller differs depending on the model. Refer to the following table.

Signal name	Model of temperature controller					
	GREEN Series UT/UP/ UM	GREEN Series US	UTAdvanced Series			
			UT32A/UP32A	UT35A/UP35A/UT55A (product condition A)/ UP55A (product condition A)	UT55A (product condition B)/UP55A (product condition B)	UT75A
	Pin No.	Pin No.	Pin No.	Pin No.	Pin No.	Pin No.
SDB (+)	23	21	301	407	501	1
SDA (-)	24	22	302	408	502	2
RDB (+)	25	23	304	410	504	4
RDA (-)	26	24	305	411	505	5
SG	27	25	303	409	503	3

*2 Terminating resistor should be provided for a GOT and a temperature controller which will be a terminal.

*3 For GT27 and GT25 (except for GT2505-V), set the terminating resistor to "Enable".
For GT2505-V, set the terminating resistor to "110 Ω".
☞ Page 305 Connecting terminating resistors

*4 Connect FG grounding to the appropriate part of a cable shield line.

■RS-485 connection diagram 21)

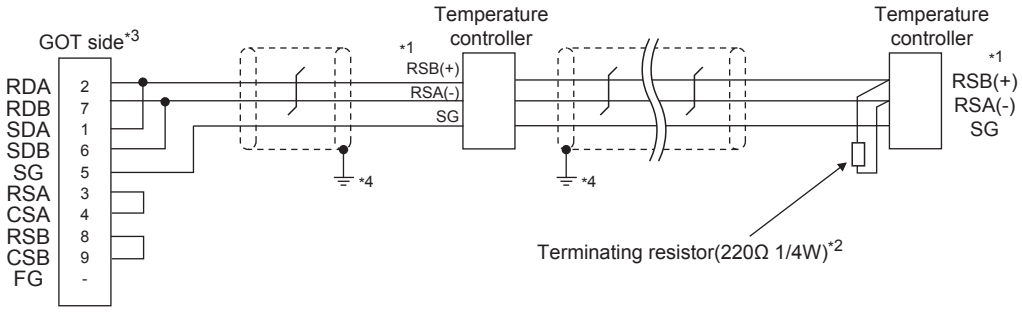

*1 Pin No. of temperature controller differs depending on the model. Refer to the following table.

Signal name	Model of temperature controller		
	GREEN Series UT750/UP750	UT100 Series UT130/UT150/UP150	UT100 Series UT152/UT155
	Pin No.	Pin No.	Pin No.
RSB (+)	28	3	26
RSA (-)	29	4	27
SG	30	5	28

*2 Terminating resistor should be provided for a GOT and a temperature controller which will be a terminal.

*3 For GT27 and GT25 (except for GT2505-V), set the terminating resistor to "Enable".
For GT2505-V, set the terminating resistor to "110 Ω".
☞ Page 305 Connecting terminating resistors

*4 Connect FG grounding to the appropriate part of a cable shield line.

■RS-485 connection diagram 22)

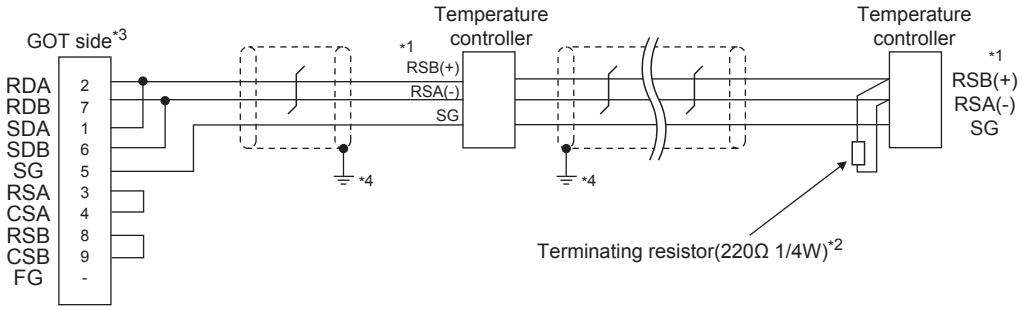

*1 Pin No. of temperature controller differs depending on the model. Refer to the following table.

Signal name	Model of temperature controller				
	GREEN Series UT750/UP750	UT100 Series UT130/UT150/ UP150	UT100 Series UT152/UT155	UTAdvanced Series UT52A/UM33A	UTAdvanced Series UT55A/UP55A
	Pin No.	Pin No.	Pin No.	Pin No.	Pin No.
RSB (+)	28	3	26	301	501
RSA (-)	29	4	27	302	502
SG	30	5	28	303	503

*2 Terminating resistor should be provided for a GOT and a temperature controller which will be a terminal.

*3 For GT27 and GT25 (except for GT2505-V), set the terminating resistor to "Enable".
For GT2505-V, set the terminating resistor to "110 Ω".
☞ Page 305 Connecting terminating resistors

*4 Connect FG grounding to the appropriate part of a cable shield line.

■RS-485 connection diagram 23)

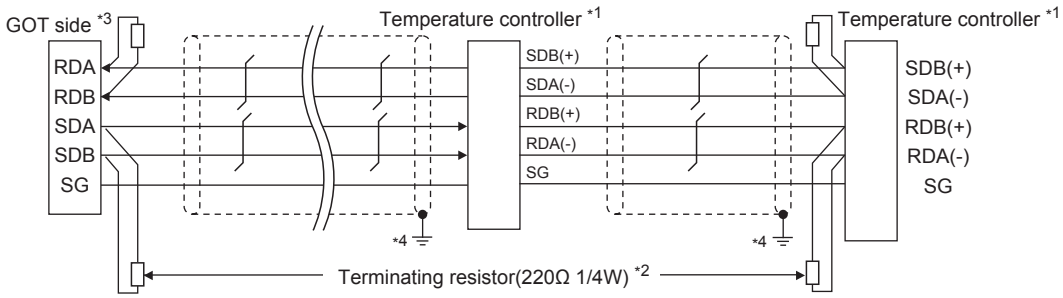

*1 Pin No. of temperature controller differs depending on the model. Refer to the following table.

Signal name	Model of temperature controller					
	GREEN Series UT/UP/UM	GREEN Series US	UTAdvanced Series			
			UT32A/UP32A/ UM33A	UT35A/UP35A/UT55A (product condition A)/ UP55A (product condition A)	UT55A (product condition B)/UP55A (product condition B)	UT75A
	Pin No.	Pin No.	Pin No.	Pin No.	Pin No.	Pin No.
SDB (+)	23	21	301	407	501	1
SDA (-)	24	22	302	408	502	2
RDB (+)	25	23	304	410	504	4
RDA (-)	26	24	305	411	505	5
SG	27	25	303	409	503	3

• For the product condition of UTAdvanced series, refer to the following table.

Model	Product condition	Suffix code		Optional suffix code	Remark
		Function	Open network		
UT55A	A	-	1	-	Product with the open network port of RS-485 communication (4-wire type/2-wire type)
	B	1 or 2	-	Without "/LP"	Product with two RS-485 communication ports (4-wire type/ 2-wire type) and without the power supply for 24VDC sensor
UP55A	A	Other than 3	1	-	Product without the additional contact output points (DO) and with the open network port of RS-485 communication (4-wire type/2-wire type) (Standard code model)
		-	-	With "/CH3"	Product with the RS-485 communication port (4-wire type/2-wire type) specified in the E3 terminal area option (Detailed code model)
	B	2	-	-	Product with two RS-485 communication ports (4-wire type/ 2-wire type) (Standard code model)
		-	-	With "/C4"	Product with the RS-485 communication port (4-wire type/2-wire type) specified in the E4 terminal area option (Detailed code model)

*2 Terminating resistor should be provided for a GOT and a temperature controller which will be a terminal.
*3 Set the 2-wire/4-wire terminating resistor setting switch of the RS-232/485 signal conversion adapter as shown below.
2-wire/4-wire: 4-wire (2 pairs)
Terminating resistor: OPEN
☞ Page 67 Setting the RS-232/485 signal conversion adaptor
*4 Connect FG grounding to the appropriate part of a cable shield line.

■RS-485 connection diagram 24)

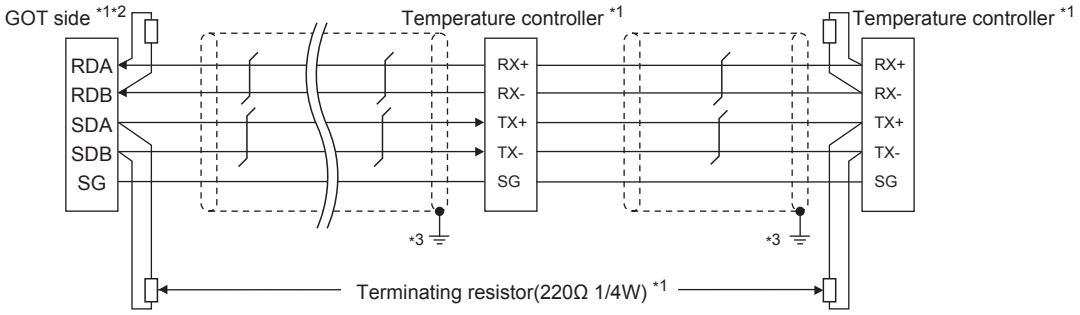

*1 Terminating resistor should be provided for a GOT and a temperature controller which will be a terminal.
*2 Set the 2-wire/4-wire terminating resistor setting switch of the RS-232/485 signal conversion adapter as shown below.
2-wire/4-wire: 4-wire (2 pairs)
Terminating resistor: OPEN
☞ Page 67 Setting the RS-232/485 signal conversion adaptor
*3 Connect FG grounding to the appropriate part of a cable shield line.

Precautions when preparing a cable

■Cable length

The length of the RS-485 cable must be within the maximum distance.

■GOT side connector

For the GOT side connector, refer to the following.

☞ Page 58 GOT connector specifications

■YOKOGAWA temperature controller side connector

Use the connector compatible with the YOKOGAWA temperature controller side.

For details, refer to the user's manual of the YOKOGAWA temperature controller.

Connecting terminating resistors

■GOT side

• For GT27, GT25(Except GT2505-V), GT23

Set the terminating resistor setting switch of the GOT main unit to "Enable".

• For GT2505-V

Set the terminating resistor selector.

For the procedure to set the terminating resistor, refer to the following.

☞ Page 62 Terminating resistors of GOT

■YOKOGAWA temperature controller side

When connecting a YOKOGAWA temperature controller to the GOT, a terminating resistor must be connected.

☞ Page 308 Temperature Controller Side Setting

9.4 GOT Side Settings

Setting the communication interface (Controller setting)

Set the channel of the connected equipment.

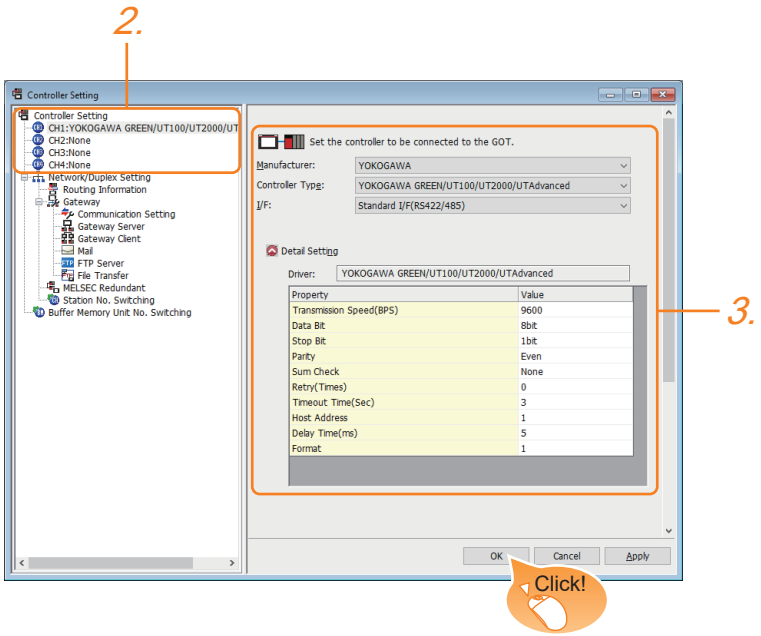

1. Select [Common] → [Controller Setting] from the menu.

2. In the [Controller Setting] window, select the channel No. to be used from the list menu.

3. Set the following items.

- [Manufacturer]: [YOKOGAWA]
- [Controller Type]: [YOKOGAWA GREEN/UT100/UT2000/UTAdvanced]
- [I/F]: Interface to be used
- [Detail Setting]: Configure the settings according to the usage environment.

☞ Page 307 Communication detail settings

4. When you have completed the settings, click the [OK] button.

Point

The settings of connecting equipment can be confirmed in [I/F Communication Setting].
For details, refer to the following.
☞ Page 48 I/F communication setting

Communication detail settings

Property	Value
Transmission Speed(BPS)	9600
Data Bit	8 bit
Stop Bit	1 bit
Parity	Even
Sum Check	None
Retry(Times)	0
Timeout Time(Sec)	3
Host Address	1
Delay Time(ms)	5
Format	1

Item	Description	Range
Transmission Speed	Set this item when change the transmission speed used for communication with the connected equipment. (Default: 9600bps)	4800bps, 9600bps, 19200bps, 38400bps, 57600bps, 115200bps
Data Bit	Set this item when change the data length used for communication with the connected equipment. (Default: 8bits)	7bits/8bits
Stop Bit	Specify the stop bit length for communications. (Default: 1bit)	1bit/2bits
Parity	Specify whether or not to perform a parity check, and how it is performed during communication. (Default: Even)	None Even Odd
Sum Check	Set whether or not to perform a sum check during communication. (Default: No)	Done, None
Retry	Set the number of retries to be performed when a communication error occurs. (Default: 0time)	0 to 5times
Timeout Time	Set the time period for a communication to time out. (Default: 3sec)	1 to 30sec
Host Address	Specify the host address (station No. of the GOT to which the temperature controller is connected) in the connected network. (Default: 1)	1 to 99
Delay Time	Set this item to adjust the transmission timing of the communication request from the GOT. (Default: 5ms)	0 to 300ms
Format	Select the communication format. (Default: 1) Format 1: Accessible to GREEN/UT100/UT2000/UTAdvanced Series Format 2: Accessible to GREEN/UT2000/UTAdvanced Series, Not accessible to UT100 Series.	1/2

Point

• Format

When connecting to UT100 Series, specify the format 1.

When connecting to only GREEN/UT2000/UTAdvanced Series, specifying the format 2 is recommended.

• Communication interface setting by the Utility

The communication interface setting can be changed on the Utility's [Communication setting] after writing [Communication Settings] of project data.

For details on the Utility, refer to the following manual.

GOT2000 Series User's Manual (Utility)

• Precedence in communication settings

When settings are made by GT Designer3 or the Utility, the latest setting is effective.

9.5 Temperature Controller Side Setting

Point

• YOKOGAWA temperature controller

For details of YOKOGAWA temperature controller, refer to the following manual.

User's Manual of the YOKOGAWA temperature controller

• RS232C/RS485 converter

For details on communication settings of the RS232C/RS485 converter, refer to the following manual.

User's Manual of RS232C/RS485 converter

Model name		Refer to
Temperature controller	GREEN	☞ Page 308 Connecting to GREEN Series
	UT100	☞ Page 309 Connecting to UT100 Series
	UT2000	☞ Page 309 Connecting to UT2000 Series
	UTAdvanced	☞ Page 310 Connecting to UTAdvanced Series
RS232C/RS485 converter	ML2-□	☞ Page 311 Connecting to RS232C/RS485 converter (ML2-□)

Connecting to GREEN Series

Communication settings

Make the communication settings by operating the key of the temperature controller.

■For the UT□/UP□/UM□/US1000 (except UT750, UP750)

Item	Set value
Transmission speed	9600bps (fixed)
Data bit*1	7bits, 8bits
Parity bit*1	Even, odd, none
Stop bit*1	1bit, 2bits
Address*1*2	1 to 99
Protocol selection*1	0: PC link communication (without sum check) 1: PC link communication (with sum check)

*1 Adjust the settings with GOT settings.

*2 Avoid duplication of the address with any of the other units.

■For the UT750, UP750

Item	Set value	
Transmission speed*1	RS-485 communication	9600bps (fixed)
	High performance RS-485 communication	9600bps, 19200bps, 38400bps
Data bit*1	7bits, 8bits	
Parity bit*1	Even, odd, none	
Stop bit*1	1bit, 2bits	
Address*1*2	1 to 99	
Protocol selection*1	RS-485 communication	0: PC link communication (without sum check) 1: PC link communication (with sum check)
	High performance RS-485 communication	0: PC link communication (without sum check) 1: PC link communication (with sum check)

*1 Adjust the settings with GOT settings.

*2 Avoid duplication of the address with any of the other units.

Connecting to UT100 Series

Communication settings

Make the communication settings by operating the key of the temperature controller.

Item	Set value
Transmission speed	9600bps
Data bit*1	7bits, 8bits
Parity bit*1	Even, odd, none
Stop bit*1	1bit, 2bits
Address*1*2	1 to 99
Protocol selection*1	0: PC link communication (without sum check) 1: PC link communication (with sum check)

*1 Adjust the settings with GOT settings.
*2 Avoid duplication of the address with any of the other units.

Connecting to UT2000 Series

Communication settings

Make the communication settings using setting switches.

Item	Set value
Transmission speed	9600bps
Data bit*1	8bits (fixed)
Parity bit*1	Even, odd, none
Stop bit*1	1bit (fixed)
Station No.*1*2	1 to 16
Communication mode	PC link communication mode

*1 Adjust the settings with GOT settings.
*2 Avoid duplication of the station No. with any of the other units.

Settings by switch

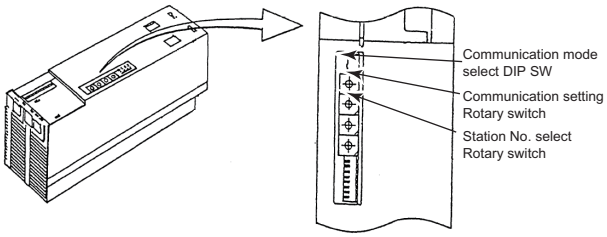

■Settings of the transmission speed and the parity

Make those settings by operating the communication setting Rotary switch.

Switch position	Transmission speed	Parity bit
0	9600bps	None
1		Odd
2		Even

■Communication mode settings

Make this setting by operating the communication mode select DIP SW.

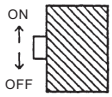

Switch position	Communication mode
ON	PC link communication mode

■A setting of the station No.

Make this setting by operating the station No. select Rotary switch.

Switch position	Station No.
0	1
1	2
2	3
3	4
4	5
5	6
6	7
7	8
8	9
9	10
A	11
B	12
C	13
D	14
E	15
F	16

Connecting to UTAdvanced Series

Communication settings

Make the communication settings by operating the key of the temperature controller.

Item	Set value
Transmission speed*1	9600bps, 19200bps, 38400bps
Data bit*1	7bits, 8bits
Parity bit*1	Even, odd, none
Stop bit*1	1bit, 2bits
Address*1*2	1 to 99
Minimum response time	0 to 10 (x 10ms)
Protocol selection*1	0: PC link communication (without sum check) 1: PC link communication (with sum check)

*1 Adjust the settings with GOT settings.
*2 Avoid duplication of the address with any of the other units.

Connecting to RS232C/RS485 converter (ML2-□)

Communication settings

Make the communication settings using setting switches.

Item	Set value
Transmission speed*1	9600bps, 19200bps, 38400bps
Setting (2-wire/4-wire)*2	2-wire type or 4-wire type
Terminating resistor*2	With, Without
Echo back	OFF
RS-485 driver-active control	AUTO

*1 Adjust the settings with GOT settings.

*2 Refer to the following connection diagram for setting.

☞ Page 287 RS-485 cable

Settings by switch

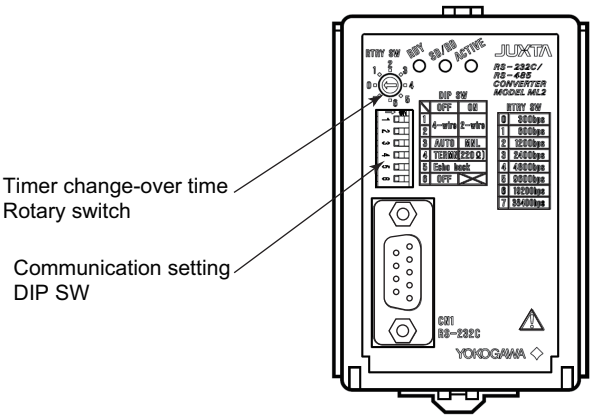

■Settings of the setting (2-wire/4-wire), the RS-485 driver-active control, the terminating resistor, the echo back

Make those settings by operating the communication setting DIP SW.

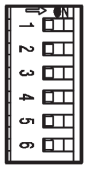

Setting item	Set value	Switch position					
		1	2	3	4	5	6
Setting(2-wire/4-wire)	4-wire type	OFF	OFF				—
	2-wire type	ON	ON				
RS-485 driver-active control	AUTO			OFF			
Terminating resistor	with				ON		
	without				OFF		
Echo back	OFF					OFF	

■A setting of the transmission speed

Make this setting by operating the timer change-over time Rotary switch.

Switch position	Transmission speed
5	9600bps
6	19200bps
7	38400bps

Station number setting

Set each station number so that no station number overlaps.

The station number can be set without regard to the cable connection order. There is no problem even if station numbers are not consecutive.

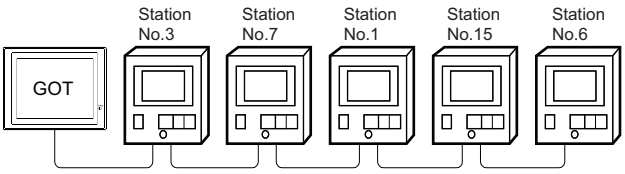

Examples of station number setting

Direct specification

When setting the device, specify the station number of the temperature controller of which data is to be changed.

Specification range
1 to 99

Indirect specification

When setting the device, indirectly specify the station number of the inverter of which data is to be changed using the 16-bit GOT internal data register (GD10 to GD25).

When specifying the station No. from 100 to 115 on GT Designer3, the value of GD10 to GD25 compatible to the station No. specification will be the station No. of the temperature controller.

Specification station NO.	Compatible device	Setting range
100	GD10	1 to 99 For the setting other than the above, error (dedicated device is out of range) will occur.
101	GD11	
102	GD12	
103	GD13	
104	GD14	
105	GD15	
106	GD16	
107	GD17	
108	GD18	
109	GD19	
110	GD20	
111	GD21	
112	GD22	
113	GD23	
114	GD24	
115	GD25	

All station specification

Target station differs depending on write-in operation or read-out operation.

- For write-in operation, all station will be a target.In the WORD BIT write-in operation, only the temperature controller whose station No. is the same as host address is applicable.

☞ Page 307 Communication detail settings

- In the read-out operation, only the temperature controller whose station No. is the same as host address is applicable. For details of host address setting, refer to the following.

☞ Page 307 Communication detail settings

Point

The all station specification can be set for the following temperature controllers only.
UT420, UT450, UT520, UT550, T551, UT750, UP550, UP750, US1000

9.6 Settable Device Range

For the device setting dialog and range of devices usable in the GOT, refer to the following.

☞ Page 606 YOKOGAWA equipment ([YOKOGAWA GREEN/UT100/UT2000/UTAdvanced])

9.7 Precautions

Station number settings of temperature controller

In the system configuration, the temperature controller with the station number set with the host address must be included.For details of host address setting, refer to the following.

☞ Page 307 Communication detail settings

GOT clock control

Since the temperature controller does not have a clock function, the settings of "time adjusting" or "time broad cast" by GOT clock control will be disabled.

Disconnecting some of multiple connected equipment

The GOT can disconnect some of multiple connected equipment by setting GOT internal device.For example, the faulty station where a communication timeout error occurs can be disconnected from connected equipment.

For details of GOT internal device setting, refer to the following manual.

📖GT Designer3 (GOT2000) Screen Design Manual

MEMO

10 RKC TEMPERATURE CONTROLLER

- Page 317 Connectable Model List
- Page 319 System Configuration
- Page 366 Connection Diagram
- Page 382 GOT Side Settings
- Page 384 Temperature Controller Side Setting
- Page 409 Settable Device Range
- Page 409 Precautions

10.1 Connectable Model List

The following table shows the connectable models.

Series	Model name*1	Clock	Communication Type	Connectable model	Refer to
SR Mini HG	H-PCP-J	×	RS-232 RS-422 RS-485	GT27 GT25 GT23	☞ Page 319 Connecting to SR Mini HG series (HGH-PCP-J)
	H-PCP-A	×	RS-232 RS-422	GT27 GT25 GT23	☞ Page 323 Connecting to SR Mini HG series (H-PCP-A, H-PCP-B)
	H-PCP-B				
SRZ	Z-TIO	×	RS-232 RS-422 RS-485	GT27 GT25 GT23	☞ Page 325 Connecting to SRZ series
	Z-DIO				
	Z-CT				
	Z-COM				
SRJ	J-TI-A/B	×	RS-232 RS-485	GT27 GT25 GT23	☞ Page 329 Connecting to SRJ series
CB	CB100	×	RS-232 RS-485	GT27 GT25 GT23	☞ Page 331 Connecting to CB series
	CB400				
	CB500				
	CB700				
	CB900				
FB	FB100	×	RS-485	GT27 GT25 GT23	☞ Page 333 Connecting to FB series
	FB400	×	RS-232 RS-422 RS-485		
	FB900				
RB	RB100	×	RS-485	GT27 GT25 GT23	☞ Page 338 Connecting to RB series
	RB400				
	RB500				
	RB700				
	RB900				
PF	PF900 PF901	×	RS-232 RS-422 RS-485	GT27 GT25 GT23	☞ Page 340 Connecting to PF, HA, RMC, MA, AG, or SA series
HA	HA400/401 HA900/901	×	RS-232 RS-422 RS-485		
RMC	RMC500	×	RS-485		
MA	MA900 MA901	×	RS-232 RS-422 RS-485		
AG	AG500	×	RS-422 RS-485		
THV	THV-A1	×	RS-422 RS-485	GT27 GT25 GT23	☞ Page 344 Connecting to THV series
SA	SA100 SA200	×	RS-232 RS-485	GT27 GT25 GT23	☞ Page 340 Connecting to PF, HA, RMC, MA, AG, or SA series

Series	Model name*1	Clock	Communication Type	Connectable model	Refer to
SRX	X-TIO	×	RS-232 RS-485	GT27 GT25 GT23	☞ Page 347 Connecting to SRX series
SB1	SB1	×	RS-232 RS-485	GT27 GT25 GT23	☞ Page 349 Connecting to SB1 series
B400	B400	×	RS-232 RS-485	GT27 GT25 GT23	☞ Page 351 Connecting to B400 series
FZ	FZ110	×	RS-485	GT27 GT25	☞ Page 352 Connecting to FZ series
	FZ400	×	RS-422 RS-485	GT27 GT25	
	FZ900				
RZ	RZ100	×	RS-485	GT27 GT25	☞ Page 356 Connecting to RZ series
	RZ400				
PZ	PZ400	×	RS-422 RS-485	GT27 GT25 GT23	☞ Page 358 Connecting to PZ series
	PZ900				
GZ	GZ400	×	RS-422 RS-485	GT27 GT25 GT23	☞ Page 362 Connecting to GZ series
	GZ900				

*1 From the models of temperature controller, select the detailed model name which supports each communication type and communication protocol (MODBUS). For details of RKC temperature controller detailed model names, refer to the following catalog.
📖Catalog of RKC temperature controllers

10.2 System Configuration

Connecting to SR Mini HG series (HGH-PCP-J)

When connecting to one temperature controller

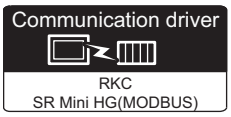

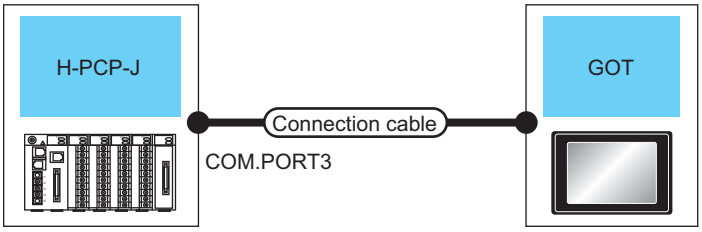

Temperature controller		Connection cable		Conversion connector*1	GOT		Number of connectable equipment
Model name	Communication Type	Cable model Connection diagram number	Max. distance	Model name	Option device	Model	
H-PCP-J	RS-232	W-BF-28-0500(0.5m)*1 W-BF-28-1000(1m)*1 W-BF-28-3000(3m)*1 or User preparing Page 366 RS-232 connection diagram 1)	15m	-	- (Built into GOT)	GT27 GT25 GT23	Up to 1 temperature controller for 1 GOT
					GT15-RS2-9P	GT27 GT25 *4*5	
		W-BF-02-0500(0.5m)*1 W-BF-02-1000(1m)*1 W-BF-02-3000(3m)*1	15m	FAX067*1	- (Built into GOT)	GT27 GT25 GT23	
					GT15-RS2-9P	GT27 GT25 *4*5	
	RS-422	User preparing Page 368 RS-422 connection diagram 1)	1200m	-	- (Built into GOT)	GT27 GT25 GT23	
					GT15-RS4-9S	GT27 GT25 *4*5	
		User preparing Page 371 RS-422 connection diagram 5)	1200m	-	GT14-RS2T4-9P *6	GT25 *7	

Temperature controller		Connection cable		Conversion connector*1	GOT		Number of connectable equipment
Model name	Communication Type	Cable model Connection diagram number	Max. distance	Model name	Option device	Model	
H-PCP-J	RS-485	User preparing Page 373 RS-485 connection diagram 1)	1200m	-	- (Built into GOT)	GT27 GT25 GT23	Up to 1 temperature controller for 1 GOT
		W-BF-01-0500(0.5m)*1*2 W-BF-01-1000(1m)*1*2 W-BF-01-3000(3m)*1*2 or User preparing Page 373 RS-485 connection diagram 2)	1200m	-	GT15-RS4-TE	GT27 GT25 *4*5	
		W-BF-01-0500(0.5m) *1*2 W-BF-01-1000(1m) *1*2 W-BF-01-3000(3m) *1*2 or User preparing Page 379 RS-485 connection diagram 10)	1200m	-	FA-LTBGT2R4CBL05 (0.5m) *3 FA-LTBGT2R4CBL10 (1m) *3 FA-LTBGT2R4CBL20 (2m) *3	GT27 GT25 GT23 *5	
		W-BF-01-0500(0.5m) *1*2 W-BF-01-1000(1m) *1*2 W-BF-01-3000(3m) *1*2 or User preparing Page 379 RS-485 connection diagram 11)	1200m	-	GT14-RS2T4-9P *6	GT25 *7	

*1 Product manufactured by RKC. For details of the product, contact RKC.
*2 To use the dedicated cable, conversion of the cable may be necessary.
*3 Product manufactured by MITSUBISHI ELECTRIC ENGINEERING COMPANY LIMITED. For details of the product, contact MITSUBISHI ELECTRIC ENGINEERING COMPANY LIMITED.
*4 Not available to GT25-W.
*5 Not available to GT2505-V.
*6 Connect it to the RS-232 interface (built in the GOT).
*7 Only available to GT2505-V.

When connecting to multiple temperature controllers

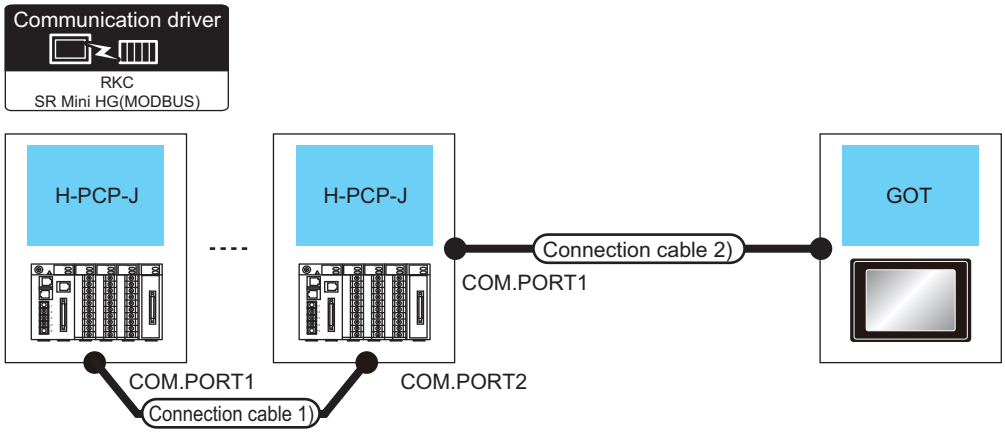

Temperature controller		Connection cable 1)	Connection cable 2)	Max. distance	GOT		Number of connectable equipment
Model name	Communication Type	Cable model Connection diagram number	Cable model Connection diagram number		Option device	Model	
H-PCP-J	RS-422	W-BF-02-0500(0.5m)*2 W-BF-02-1000(1m)*2 W-BF-02-3000(3m)*2	User preparing Page 368 RS-422 connection diagram 1)	1200m*1	- (Built into GOT)	GT27 GT25 GT23	Up to 16 temperature controllers for 1 GOT
					GT15-RS4-9S	GT27 GT25 *5*6	
			User preparing Page 371 RS-422 connection diagram 5)	1200m *1	GT14-RS2T4-9P *7	GT25 *8	
	RS-485	W-BF-02-0500(0.5m)*2 W-BF-02-1000(1m)*2 W-BF-02-3000(3m)*2	User preparing Page 373 RS-485 connection diagram 1)	1200m	- (Built into GOT)	GT27 GT25 GT23	
					GT15-RS4-9S	GT27 GT25 *5*6	
			W-BF-01-0500(0.5m)*2*3 W-BF-01-1000(1m)*2*3 W-BF-01-3000(3m)*2*3 or User preparing Page 373 RS-485 connection diagram 2)	1200m*1	GT15-RS4-TE	GT27 GT25 *5*6	
			W-BF-01-0500(0.5m) *2*3 W-BF-01-1000(1m) *2*3 W-BF-01-3000(3m) *2*3 or User preparing Page 379 RS-485 connection diagram 10)	1200m *1	FA-LTBGT2R4CBL05 (0.5m) *4 FA-LTBGT2R4CBL10 (1m) *4 FA-LTBGT2R4CBL20 (2m) *4	GT27 GT25 GT23 *6	
			W-BF-01-0500(0.5m) *2*3 W-BF-01-1000(1m) *2*3 W-BF-01-3000(3m) *2*3 or User preparing Page 379 RS-485 connection diagram 11)	1200m *1	GT14-RS2T4-9P *7	GT25 *8	

*1 The total length of the connection cable 1) + connection cable 2)
*2 Product manufactured by RKC. For details of the product, contact RKC.
*3 To use the dedicated cable, conversion of the cable may be necessary.
*4 Product manufactured by MITSUBISHI ELECTRIC ENGINEERING COMPANY LIMITED. For details of the product, contact MITSUBISHI ELECTRIC ENGINEERING COMPANY LIMITED.
*5 Not available to GT25-W.
*6 Not available to GT2505-V.
*7 Connect it to the RS-232 interface (built in the GOT).
*8 Only available to GT2505-V.

Connecting to SR Mini HG series (H-PCP-A, H-PCP-B)

When connecting to one temperature controller

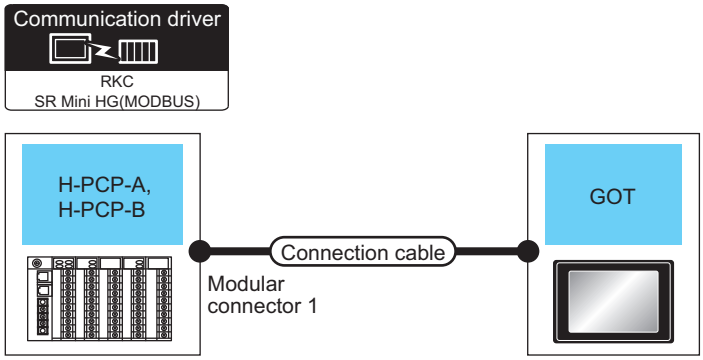

Temperature controller		Connection cable		Conversion connector*1	GOT		Number of connectable equipment
Model name	Communication Type	Cable model Connection diagram number	Max. distance		Option device*2	Model	
H-PCP-A H-PCP-B	RS-232	W-BF-28-0500(0.5m)*1 W-BF-28-1000(1m)*1 W-BF-28-3000(3m)*1 or User preparing Page 366 RS-232 connection diagram 1)	15m	-	- (Built into GOT)	GT27 GT25 GT23	Up to 1 temperature controller for 1 GOT
				-	GT15-RS2-9P	GT27 GT25	
		W-BF-02-0500(0.5m)*1 W-BF-02-1000(1m)*1 W-BF-02-3000(3m)*1	15m	FAX067	- (Built into GOT)	GT27 GT25 GT23	
					GT15-RS2-9P	GT27 GT25	
	RS-422	User preparing Page 368 RS-422 connection diagram 1)	1200m	-	- (Built into GOT)	GT27 GT25 GT23	
					GT15-RS4-9S	GT27 GT25	

*1 Product manufactured by RKC. For details of the product, contact RKC.

*2 GT25-W, GT2505-V does not support the option device.

When connecting to multiple temperature controllers

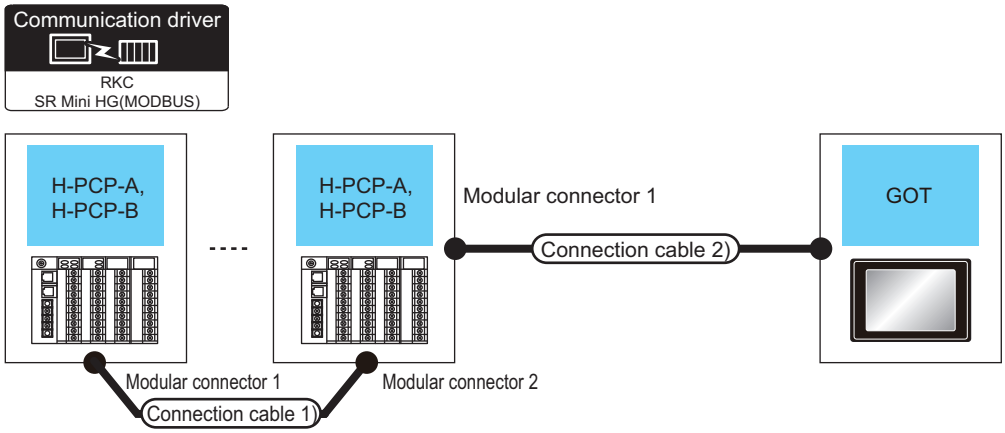

Temperature controller		Connection cable 1)	Connection cable 2)	Max. distance	GOT		Number of connectable equipment
Model name	Communication Type	Cable model Connection diagram number	Cable model Connection diagram number		Option device*2	Model	
H-PCP-A H-PCP-B	RS-422	W-BF-02-0500(0.5m)*1 W-BF-02-1000(1m)*1 W-BF-02-3000(3m)*1	User preparing Page 368 RS-422 connection diagram 1)	1200m	- (Built into GOT)	GT27 GT25 GT23	Up to 16 temperature controllers for 1 GOT
					GT15-RS4-9S	GT27 GT25	

*1 Product manufactured by RKC. For details of the product, contact RKC.
*2 GT25-W, GT2505-V does not support the option device.

Connecting to SRZ series

When connecting to Z-TIO and Z-CT with a converter

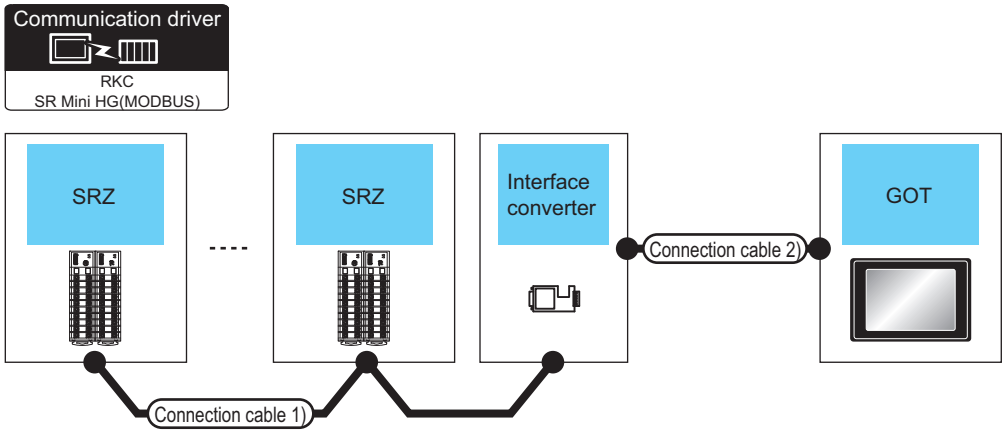

Module	Connection cable 1)		Converter		Connection cable 2)		GOT		Number of connectable equipment
Model name	Cable model Connection diagram number	Max. distance	Model name	Communication Type	Cable model Connection diagram number	Max. distance	Option device*2	Model	
Z-TIO Z-CT	User preparing Page 377 RS-485 connection diagram 6)	1200m	CD485/V*1	RS-232	User preparing Page 366 RS-232 connection diagram 3)	15m	- (Built into GOT)	GT27 GT25 GT23	Z-TIO: Up to 16 Z-CT: Up to 16 Z-DIO: Up to 16 *3 Total of Z-TIO, Z-CT and Z-DIO: Up to 31 for 1 GOT
							GT15-RS2-9P	GT27 GT25	

*1 Product manufactured by DATA LINK Co.,Ltd. For details of the product, contact DATA LINK Co.,Ltd.
*2 GT25-W, GT2505-V does not support the option device.
*3 Use them with Z-TIO and Z-CT.

When connecting directly to Z-TIO and Z-CT

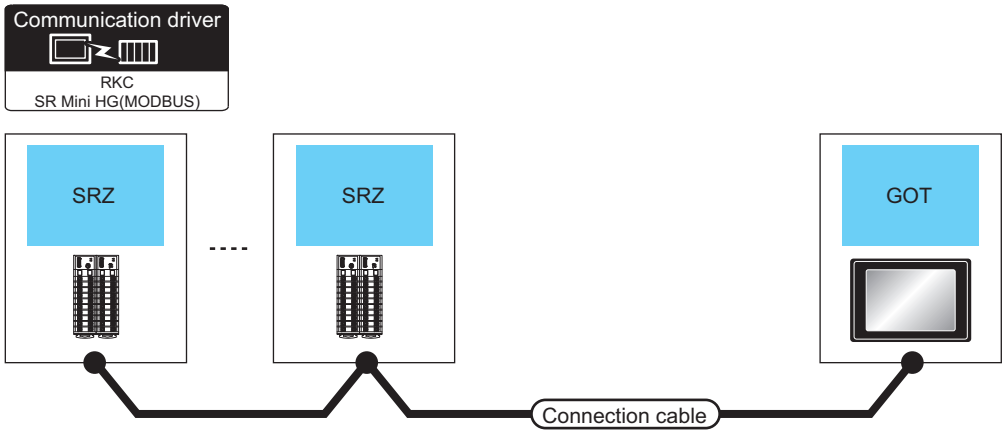

Module		Connection cable		GOT		Number of connectable equipment
Model name	Communication Type	Cable model Connection diagram number	Max. distance	Option device	Model	
Z-TIO Z-CT	RS-485	User preparing Page 375 RS-485 connection diagram 4)	1200m	- (Built into GOT)	GT27 GT25 GT23	Z-TIO: Up to 16 Z-CT: Up to 16 Z-DIO: Up to 16 *4 Total of Z-TIO, Z-CT and Z-DIO: Up to 31 for 1 GOT
		User preparing Page 376 RS-485 connection diagram 5)	1200m	GT15-RS4-TE	GT27 GT25 *1	
		User preparing Page 380 RS-485 connection diagram 12)	1200m	GT14-RS2T4-9P *2	GT25 *3	

*1 Not available to GT25-W and GT2505-V.
*2 Connect it to the RS-232 interface (built in the GOT).
*3 Only available to GT2505-V.
*4 Use them with Z-TIO and Z-CT.

When connecting to Z-COM with a converter

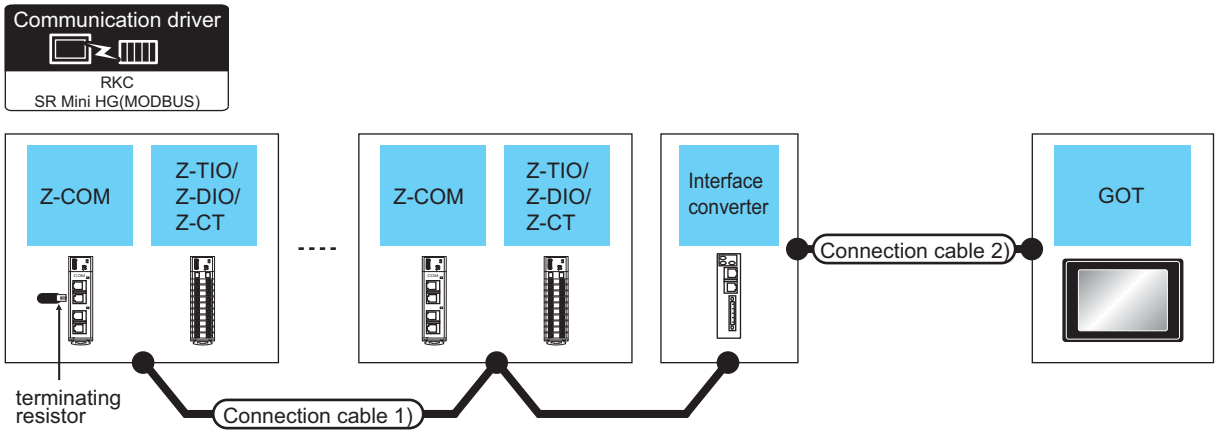

Z-COM		Connection cable 1)		Converter*1		Connection cable 2)		GOT		Number of connectable equipment
Model name	Terminating resistor *1	Cable model Connection diagram number	Max. distance	Model name	Communication Type	Cable model Connection diagram number	Max. distance	Option device*2	Model	
Z-COM	W-BW-02	W-BF-02-0500(0.5m)*1 W-BF-02-1000(1m)*1 W-BF-02-3000(3m)*1 or User preparing Page 368 RS-422 connection diagram 2)	1200m	COM-A	RS-232	W-BF-28-0500(0.5m)*1 W-BF-28-1000(1m)*1 W-BF-28-3000(3m)*1 or User preparing Page 366 RS-232 connection diagram 2)	15m	- (Built into GOT)	GT27 GT25 GT23	Up to 16 Z-COMs for 1 GOT Z-TIO: Up to 16 Z-CT: Up to 16 Z-DIO: Up to 16 Total of Z-TIO, Z-CT and Z-DIO: Up to 31 for Z-COM
								GT15-RS2-9P	GT27 GT25	

*1 Product manufactured by RKC. For details of the product, contact RKC.
*2 GT25-W, GT2505-V does not support the option device.

When connecting directly to Z-COM

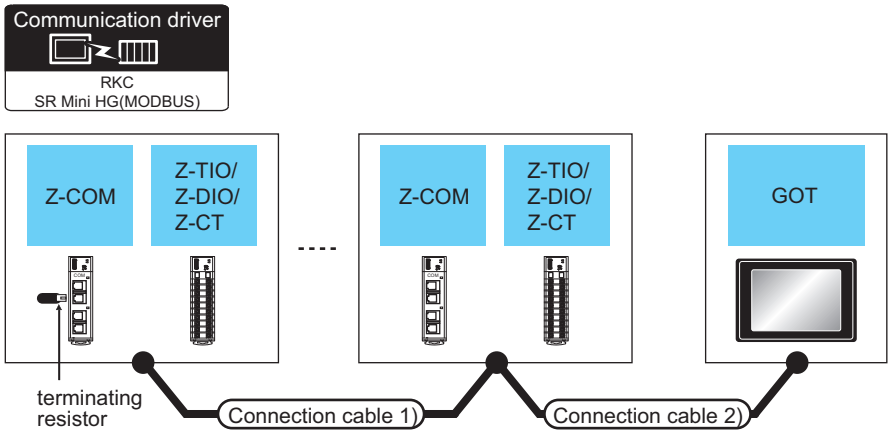

Z-COM			Connection cable 1)	Connection cable 2)	Max. distance	GOT		Number of connectable equipment
Model name	Communication Type	Terminating resistor*1	Cable model Connection diagram number	Cable model Connection diagram number		Option device	Model	
Z-COM	RS-422	W-BW-02	W-BF-02-0500(0.5m)*1 W-BF-02-1000(1m)*1 W-BF-02-3000(3m)*1 or User preparing Page 368 RS-422 connection diagram 2)	User preparing Page 368 RS-422 connection diagram 1)	1200m *2	- (Built into GOT)	GT27 GT25 GT23	Up to 16 Z-COMs for 1 GOT Z-TIO: Up to 16 Z-CT: Up to 16 Z-DIO: Up to 16 Total of Z-TIO, Z-CT and Z-DIO: Up to 31 for Z-COM
						GT15-RS4-9S	GT27 GT25 *3	
				User preparing Page 371 RS-422 connection diagram 5)	1200m	GT14-RS2T4-9P *4	GT25 *5	
	RS-485	W-BW-01	W-BF-02-0500(0.5m)*1 W-BF-02-1000(1m)*1 W-BF-02-3000(3m)*1 or User preparing Page 378 RS-485 connection diagram 7)	User preparing Page 373 RS-485 connection diagram 1)	1200m *2	- (Built into GOT)	GT27 GT25 GT23	Up to 16 Z-COMs for 1 GOT Z-TIO: Up to 16 Z-CT: Up to 16 Z-DIO: Up to 16 Total of Z-TIO, Z-CT and Z-DIO: Up to 31 for Z-COM
				User preparing Page 374 RS-485 connection diagram 3)	1200m *2	GT15-RS4-TE	GT27 GT25 *3	
				User preparing Page 381 RS-485 connection diagram 13)	1200m	GT14-RS2T4-9P *4	GT25 *5	

*1 Product manufactured by RKC. For details of the product, contact RKC.
*2 The total length of the connection cable 1) + connection cable 2)
*3 Not available to GT25-W and GT2505-V.
*4 Connect it to the RS-232 interface (built in the GOT).
*5 Only available to GT2505-V.

Connecting to SRJ series

When connecting to multiple temperature controllers with interface converter (CD485/V)

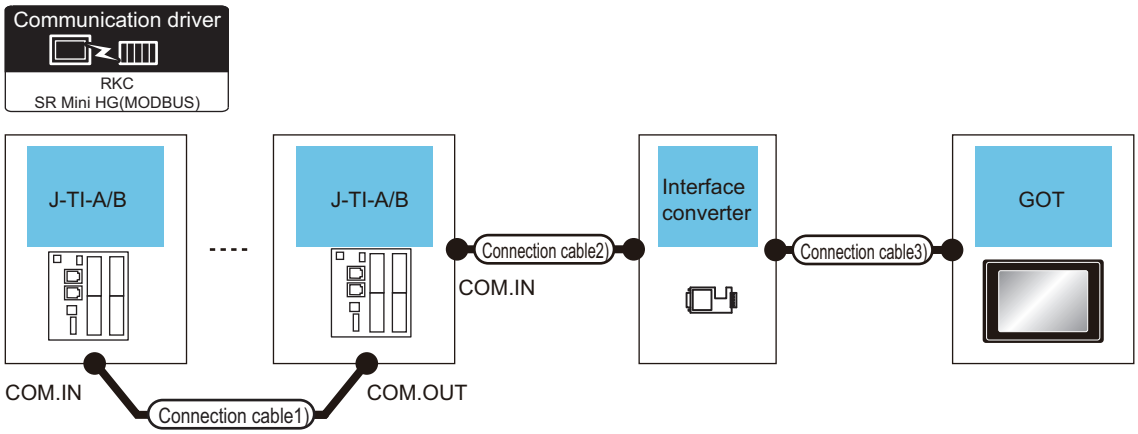

Temperature controller	Connection cable1)	Connection cable2)	Max. distance	Converter*1		Connection cable3)		GOT		Number of connectable equipment
Model name	Cable model Connection diagram number	Cable model Connection diagram number		Model name	Communication Type	Cable model Connection diagram number	Max. distance	Option device*2	Model	
J-TI-A/B	User preparing Page 377 RS-485 connection diagram 6)		1200 m	CD485/V	RS-232	User preparing Page 366 RS-232 connection diagram 3)	15 m	- (Built into GOT)	GT27 GT25 GT23	Up to 16 temperature controllers for 1 GOT *3
								GT15-RS2-9P	GT27 GT25	

*1 Product manufactured by RKC. For details of the product, contact RKC.
*2 GT25-W, GT2505-V does not support the option device.
*3 For temperature controllers (up to 16 units), set as follows.
• Up to 16 units = 4 units for master devices + 12 units for slave devices
• Three slave devices are connectable for one master device.

When connecting to multiple temperature controllers

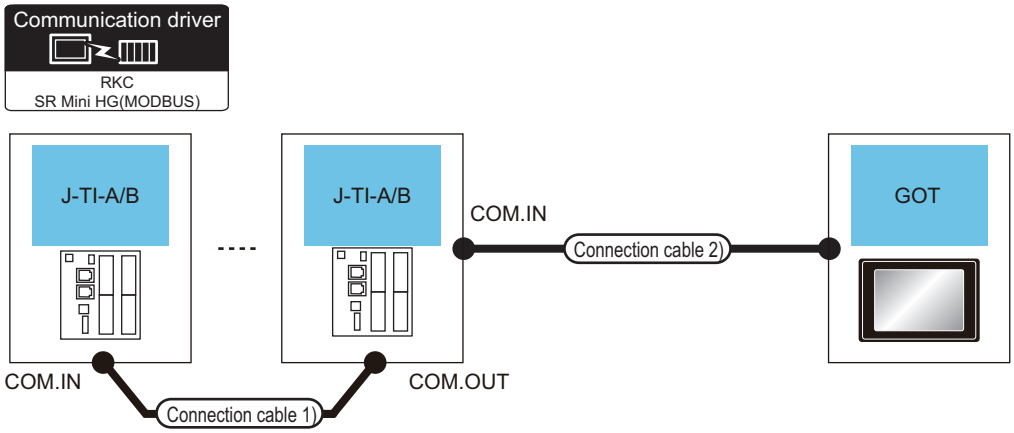

Temperature controller		Connection cable 1)	Connection cable 2)	Max. distance	GOT		Number of connectable equipment
Model name	Communication Type	Cable model Connection diagram number	Cable model Connection diagram number		Option device	Model	
J-TI-A/B	RS-485	W-BF-02-0500 (0.5 m) *2 W-BF-02-1000 (1 m) *2 W-BF-02-3000 (3 m) *2	W-BF-01-0500 (0.5 m)*2*3 W-BF-01-1000 (1 m)*2*3 W-BF-01-3000 (3 m)*2*3 or User preparing Page 378 RS-485 connection diagram 8)	1200m*1	- (Built into GOT)	GT27 GT25 GT23	Up to 16 temperature controllers for 1 GOT*5
					GT15-RS4-9S	GT27 GT25 *4	
			W-BF-01-0500 (0.5 m) *2*3 W-BF-01-1000 (1 m) *2*3 W-BF-01-3000 (3 m) *2*3 or User preparing Page 378 RS-485 connection diagram 9)	1200m*1	GT15-RS4-TE	GT27 GT25 *4	
			W-BF-01-0500 (0.5 m) *2*3 W-BF-01-1000 (1 m) *2*3 W-BF-01-3000 (3 m) *2*3 or User preparing Page 381 RS-485 connection diagram 13)	1200m *1	GT14-RS2T4-9P *6	GT25 *7	

*1 The total length of the connection cable 1) + connection cable 2)
*2 Product manufactured by RKC. For details of the product, contact RKC.
*3 To use the dedicated cable, conversion of the cable may be necessary.
*4 Not available to GT25-W and GT2505-V.
*5 For temperature controllers (up to 16 units), set as follows.
• Up to 16 units = 4 units for master devices + 12 units for slave devices
• Three slave devices are connectable for one master device.
*6 Connect it to the RS-232 interface (built in the GOT).
*7 Only available to GT2505-V.

Connecting to CB series

When using the converter

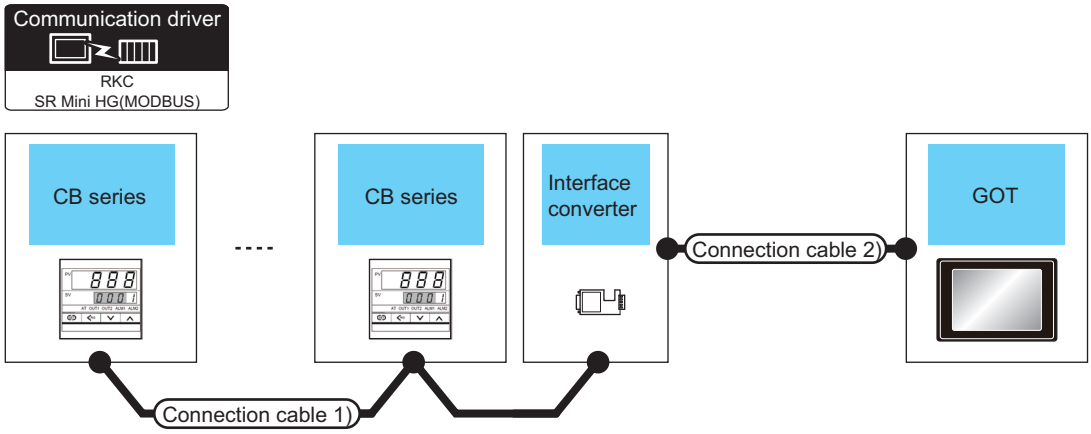

Temperature controller	Connection cable 1)		Converter		Connection cable 2)		GOT		Number of connectable equipment
Model name	Cable model Connection diagram number	Max. distance	Model name	Communication Type	Cable model Connection diagram number	Max. distance	Option device*2	Model	
CB100 CB400 CB500 CB700 CB900	User preparing Page 377 RS-485 connection diagram 6)	1200m	CD485/V*1	RS-232	User preparing Page 366 RS-232 connection diagram 3)	15m	- (Built into GOT)	GT27 GT25 GT23	Up to 31 temperature controllers for 1 GOT
							GT15-RS2-9P	GT27 GT25	

*1 Product manufactured by DATA LINK Co.,Ltd. For details of the product, contact DATA LINK Co.,Ltd.

*2 GT25-W, GT2505-V does not support the option device.

When connecting directly

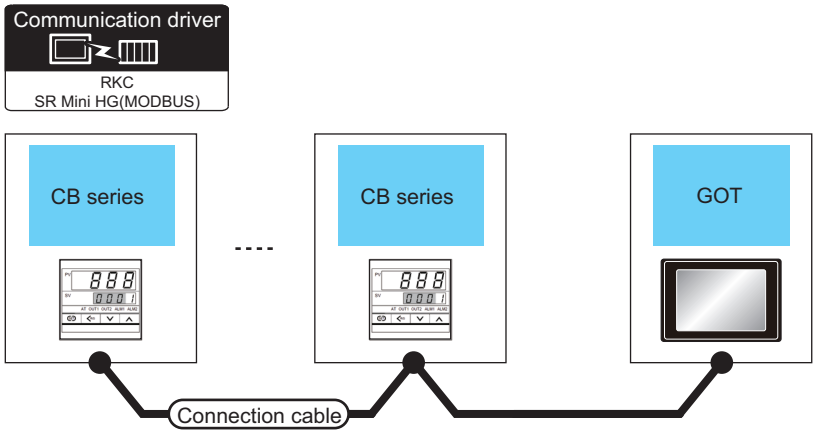

Temperature controller		Connection cable		GOT		Number of connectable equipment
Model name	Communication Type	Cable model Connection diagram number	Max. distance	Option device	Model	
CB100 CB400 CB500 CB700 CB900	RS-485	User preparing Page 375 RS-485 connection diagram 4)	1200m	- (Built into GOT)	GT27 GT25 GT23	Up to 31 temperature controllers for 1 GOT
		User preparing Page 376 RS-485 connection diagram 5)	1200m	GT15-RS4-TE	GT27 GT25 *1	
		User preparing Page 380 RS-485 connection diagram 12)	1200m	GT14-RS2T4-9P *2	GT25 *3	

*1 Not available to GT25-W and GT2505-V.
*2 Connect it to the RS-232 interface (built in the GOT).
*3 Only available to GT2505-V.

Connecting to FB series

When connecting to one temperature controller

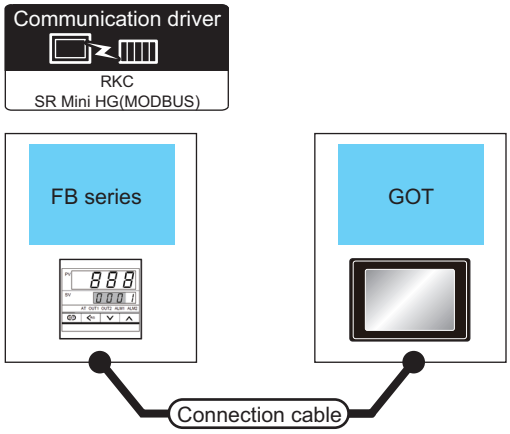

Temperature controller		Connection cable		GOT		Number of connectable equipment
Model name	Communication Type	Cable model Connection diagram number	Max. distance	Option device*2	Model	
FB400 FB900	RS-232*1	User preparing Page 367 RS-232 connection diagram 4)	15m	- (Built into GOT)	GT27 GT25 GT23	Up to 1 temperature controller for 1 GOT
				GT15-RS2-9P	GT27 GT25	

*1 Use communication 1 for the communication format.
*2 GT25-W, GT2505-V does not support the option device.

When connecting to multiple temperature controllers with interface converter (COM-A)

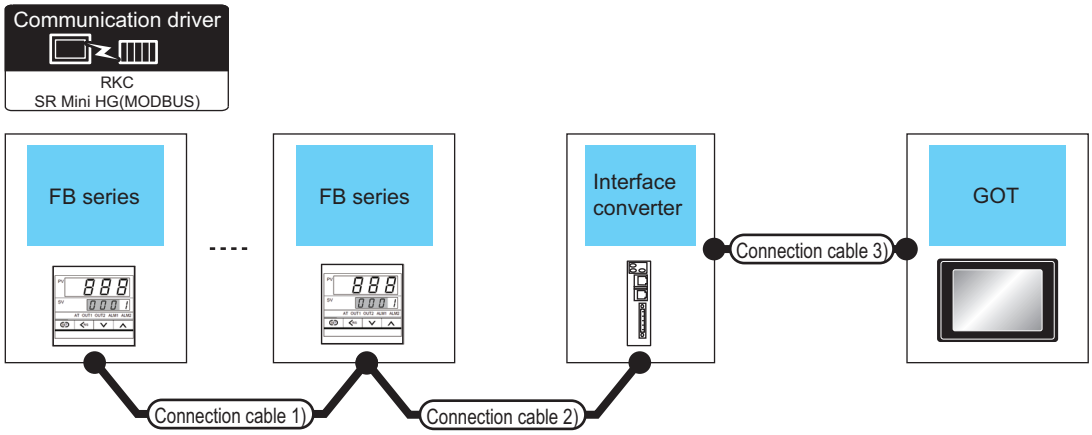

Temperature controller	Connection cable 1)	Connection cable 2)	Max. distance	Converter*2		Connection cable 3)		GOT		Number of connectable equipment
Model name	Cable model Connection diagram number	Cable model Connection diagram number		Model name	Communication Type	Cable model Connection diagram number	Max. distance	Option device*4	Model	
FB400 FB900	User preparing Page 369 RS-422 connection diagram 3)*1	W-BF-01-0500 (0.5m)*2 W-BF-01-1000 (1m)*2 W-BF-01-300 (3m)*2	1000m*3	COM-A	RS-232	W-BF-28-0500 (0.5m)*2 W-BF-28-1000 (1m)*2 W-BF-28-3000 (3m)*2 or User preparing Page 366 RS-232 connection diagram 2)	15m	- (Built into GOT)	GT27 GT25 GT23	Up to 31 temperature controllers for 1 GOT
								GT15-RS2-9P	GT27 GT25	

*1 Use communication 1 for the communication format.
*2 Product manufactured by RKC. For details of the product, contact RKC.
*3 The total length of the connection cable 1) + connection cable 2)
*4 GT25-W, GT2505-V does not support the option device.

When connecting to multiple temperature controllers with interface converter (CD485/V)

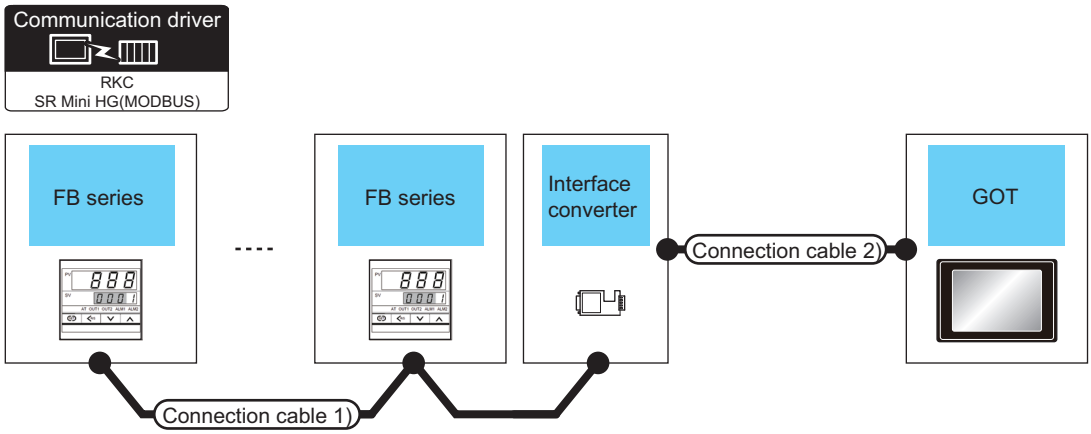

Temperature controller	Connection cable 1)		Converter*1		Connection cable 2)		GOT		Number of connectable equipment
Model name	Cable model Connection diagram number	Max. distance	Model name	Communication Type	Cable model Connection diagram number	Max. distance	Option device*2	Model	
FB100 FB400 FB900	User preparing Page 377 RS-485 connection diagram 6)	1200m	CD485/V	RS-232	User preparing Page 366 RS-232 connection diagram 3)	15m	- (Built into GOT)	GT27 GT25 GT23	Up to 31 temperature controllers for 1 GOT
							GT15-RS2-9P	GT27 GT25	

*1 Product manufactured by DATA LINK Co.,Ltd. For details of the product, contact DATA LINK Co.,Ltd.

*2 GT25-W, GT2505-V does not support the option device.

When connecting directly to a temperature controller by RS-422

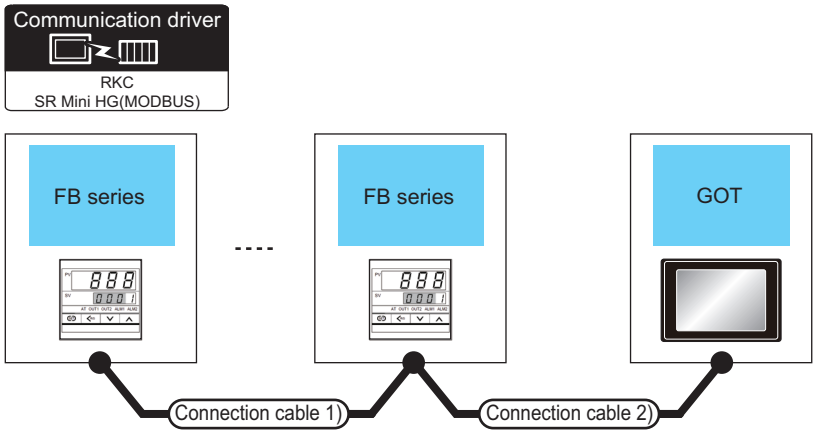

Temperature controller		Connection cable 1)	Connection cable 2)	Max. distance	GOT		Number of connectable equipment
Model name	Communication Type	Cable model Connection diagram number	Cable model Connection diagram number		Option device*3	Model	
FB400 FB900	RS-422*1	User preparing Page 369 RS-422 connection diagram 3)	User preparing Page 370 RS-422 connection diagram 4)	1000m*2	- (Built into GOT)	GT27 GT25 GT23	Up to 31 temperature controllers for 1 GOT
					GT15-RS4-9S	GT27 GT25	

*1 Use communication 1 for the communication format.
*2 The total length of the connection cable 1) + connection cable 2)
*3 GT25-W, GT2505-V does not support the option device.

When connecting directly to a temperature controller by RS-485

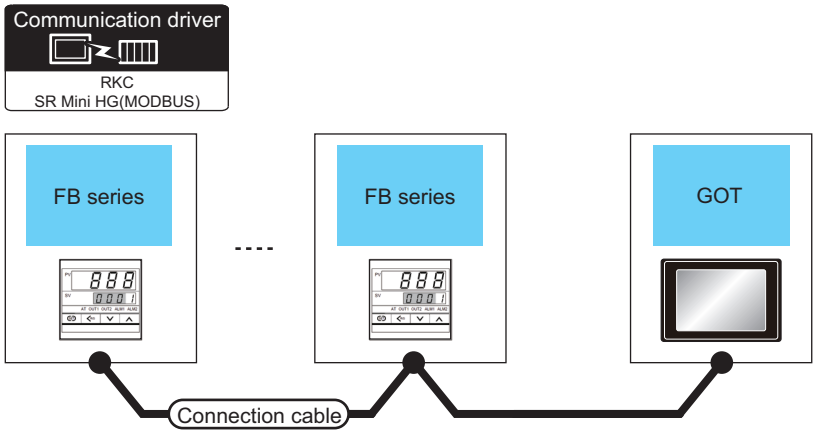

Temperature controller		Connection cable		GOT		Number of connectable equipment
Model name	Communication Type	Cable model Connection diagram number	Max. distance	Option device	Model	
FB100 FB400 FB900	RS-485	User preparing Page 375 RS-485 connection diagram 4)	1200m	- (Built into GOT)	GT27 GT25 GT23	Up to 31 temperature controllers for 1 GOT
		User preparing Page 376 RS-485 connection diagram 5)	1200m	GT15-RS4-TE	GT27 GT25 *1	
		User preparing Page 380 RS-485 connection diagram 12)	1200m	GT14-RS2T4-9P *2	GT25 *3	

*1 Not available to GT25-W and GT2505-V.
*2 Connect it to the RS-232 interface (built in the GOT).
*3 Only available to GT2505-V.

Connecting to RB series

When using the converter

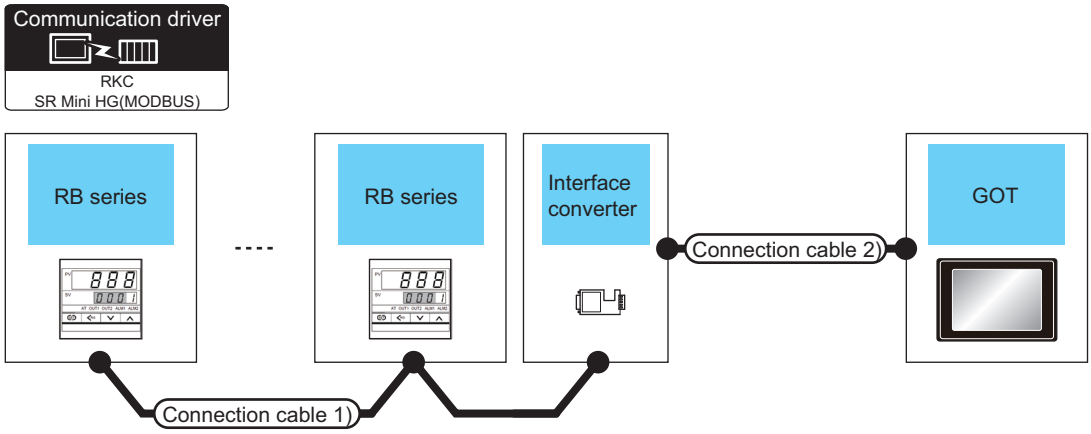

Temperature controller	Connection cable 1)		Converter*1		Connection cable 2)		GOT		Number of connectable equipment
Model name	Cable model Connection diagram number	Max. distance	Model name	Communication Type	Cable model Connection diagram number	Max. distance	Option device*2	Model	
RB100 RB400 RB500 RB700 RB900	User preparing Page 377 RS-485 connection diagram 6)	1200m	CD485/V	RS-232	User preparing Page 366 RS-232 connection diagram 3)	15m	- (Built into GOT)	GT27 GT25 GT23	Up to 31 temperature controllers for 1 GOT
							GT15-RS2-9P	GT27 GT25	

*1 Product manufactured by DATA LINK Co.,Ltd. For details of the product, contact DATA LINK Co.,Ltd.

*2 GT25-W, GT2505-V does not support the option device.

When connecting directly

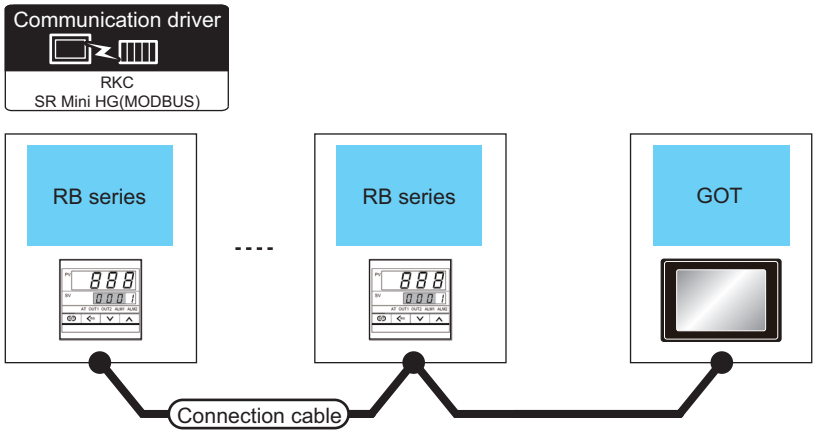

Temperature controller		Connection cable		GOT		Number of connectable equipment
Model name	Communication Type	Cable model Connection diagram number	Max. distance	Option device	Model	
RB100 RB400 RB500 RB700 RB900	RS-485	User preparing Page 375 RS-485 connection diagram 4)	1200m	- (Built into GOT)	GT27 GT25 GT23	Up to 31 temperature controllers for 1 GOT
		User preparing Page 376 RS-485 connection diagram 5)	1200m	GT15-RS4-TE	GT27 GT25 *1	
		User preparing Page 380 RS-485 connection diagram 12)	1200m	GT14-RS2T4-9P *2	GT25 *3	

*1 Not available to GT25-W and GT2505-V.
*2 Connect it to the RS-232 interface (built in the GOT).
*3 Only available to GT2505-V.

Connecting to PF, HA, RMC, MA, AG, or SA series

When connecting to multiple temperature controllers

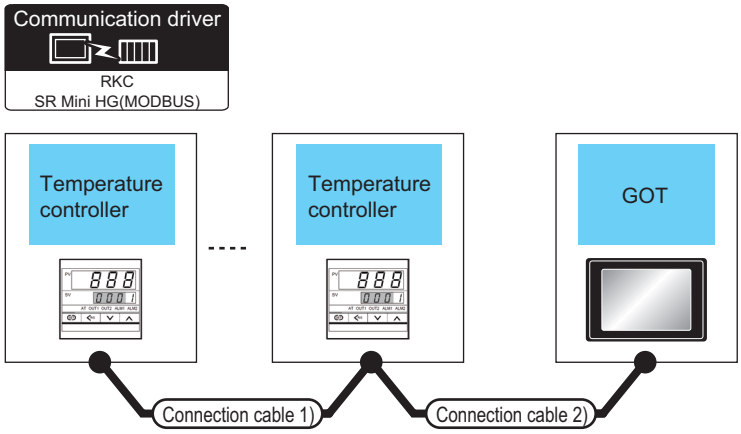

Temperature controller		Connection cable 1)	Connection cable 2)	Max. distance	GOT		Number of connectable equipment
Model name	Communication Type	Cable model Connection diagram number	Cable model Connection diagram number		Option device	Model	
PF900 PF901 HA400 HA401 HA900 HA901 MA900 MA901	RS-232	-	User preparing Page 367 RS-232 connection diagram 4)	15m	- (Built into GOT)	GT27 GT25 GT23	Up to 1 temperature controller for 1 GOT
					GT15-RS2-9P	GT27 GT25 *1	
PF900 PF901 HA400 HA401 HA900 HA901 MA900 MA901 AG500	RS-422	User preparing Page 369 RS-422 connection diagram 3)	User preparing Page 370 RS-422 connection diagram 4)	1000m	- (Built into GOT)	GT27 GT25 GT23	Up to 31 temperature controllers for 1 GOT*3
					GT15-RS4-9S	GT27 GT25 *1	
			User preparing Page 371 RS-422 connection diagram 6)	1000m	GT14-RS2T4-9P *2	GT25 *3	
PF900 PF901 HA400 HA401 HA900 HA901 MA900 MA901 AG500 RMC500 SA100 SA200	RS-485	User preparing Page 375 RS-485 connection diagram 4)		1200m	- (Built into GOT)	GT27 GT25 GT23	Up to 31 temperature controllers for 1 GOT
		User preparing Page 376 RS-485 connection diagram 5)		1200m	GT15-RS4-TE	GT27 GT25 *1	
		User preparing Page 380 RS-485 connection diagram 12)		1200m	GT14-RS2T4-9P *2	GT25 *3	

*1 Not available to GT25-W and GT2505-V.
*2 Connect it to the RS-232 interface (built in the GOT).
*3 Only available to GT2505-V.

When connecting to multiple temperature controllers with interface converter (COM-A)

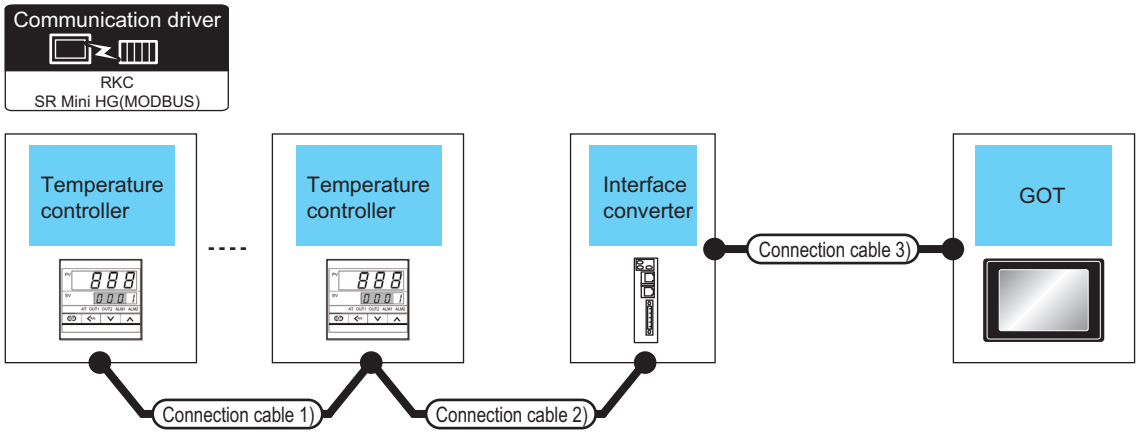

Temperature controller	Connection cable 1)	Connection cable 2)	Max. distance	Interface converter*1		Connection cable 3)		GOT		Number of connectable equipment
Model name	Cable model Connection diagram number	Cable model*1 Connection diagram number		Model name	Communication Type	Cable model Connection diagram number	Max. distance	Option device *2	Model	
PF900 PF901	User preparing Page 369 RS-422 connection diagram 3)	W-BF-01-0500 (0.5m) W-BF-01-1000 (1m) W-BF-01-3000 (3m)	1000m	COM-A	RS-232	W-BF-28-0500 (0.5m)*1 W-BF-28-1000 (1m)*1 W-BF-28-3000 (3m)*1 or User preparing Page 366 RS-232 connection diagram 2)	15m	- (Built into GOT)	GT27 GT25 GT23	Up to 31 temperature controllers for 1 GOT
								GT15-RS2-9P	GT27 GT25	

*1 Product manufactured by RKC. For details of the product, contact RKC.
*2 GT25-W, GT2505-V does not support the option device.

When connecting to multiple temperature controllers with interface converter (CD485/V)

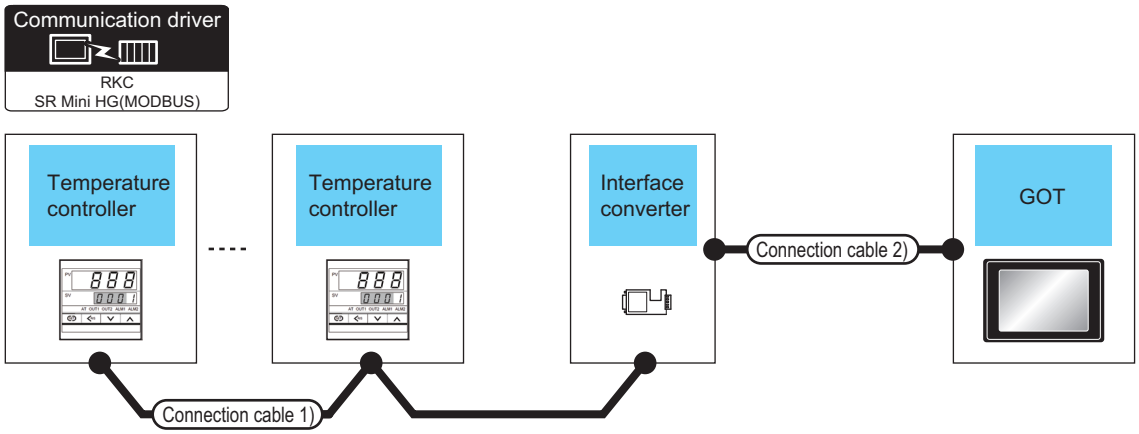

Temperature controller	Connection cable 1)	Max. distance	Interface converter*1		Connection cable 2)		GOT		Number of connectable equipment
Model name	Cable model*1 Connection diagram number		Model name	Communication Type	Cable model Connection diagram number	Max. distance	Option device*2	Model	
PF900 PF901 HA400 HA401 HA900 HA901 RMC500 SA100 SA200	User preparing Page 377 RS-485 connection diagram 6)	1200m	CD485/V	RS-232	User preparing Page 366 RS-232 connection diagram 3)	15m	- (Built into GOT)	GT27 GT25 GT23	Up to 31 temperature controllers for 1 GOT
							GT15-RS2-9P	GT27 GT25	

*1 Product manufactured by RKC. For details of the product, contact RKC.
*2 GT25-W, GT2505-V does not support the option device.

Connecting to THV series

When connecting to multiple temperature controllers

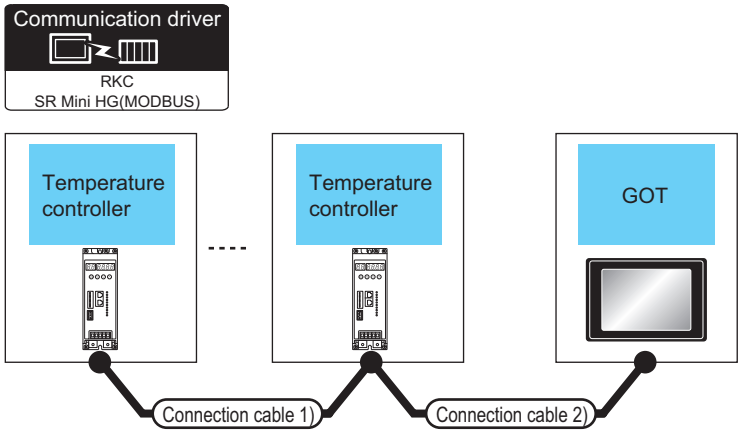

Temperature controller		Connection cable 1)	Connection cable 2)	Max. distance	GOT		Number of connectable equipment
Model name	Communication Type	Cable model*1 Connection diagram number	Cable model Connection diagram number		Option device	Model	
THV-A1	RS-422	W-BF-02-0500 (0.5m) W-BF-02-1000 (1m) W-BF-02-3000 (3m)	User preparing Page 368 RS-422 connection diagram 1)	1000m	- (Built into GOT)	GT27 GT25 GT23	Up to 31 temperature controllers for 1 GOT
					GT15-RS4-9S	GT27 GT25 *2	
			User preparing Page 371 RS-422 connection diagram 5)	1000m	GT14-RS2T4-9P *3	GT25 *4	
	RS-485	W-BF-02-0500 (0.5m) W-BF-02-1000 (1m) W-BF-02-3000 (3m)	User preparing Page 373 RS-485 connection diagram 1)	1200m	- (Built into GOT)	GT27 GT25 GT23	Up to 31 temperature controllers for 1 GOT
			W-BF-01-0500 (0.5m)*1 W-BF-01-1000 (1m)*1 W-BF-01-3000 (3m)*1 or User preparing Page 374 RS-485 connection diagram 3)		GT15-RS4-TE	GT27 GT25 *2	
			W-BF-01-0500 (0.5m)*1 W-BF-01-1000 (1m)*1 W-BF-01-3000 (3m)*1 or User preparing Page 381 RS-485 connection diagram 13)	1200m	GT14-RS2T4-9P *3	GT25 *4	

*1 Product manufactured by RKC. For details of the product, contact RKC.
*2 Not available to GT25-W and GT2505-V.
*3 Connect it to the RS-232 interface (built in the GOT).
*4 Only available to GT2505-V.

When connecting to multiple temperature controllers with interface converter (COM-A)

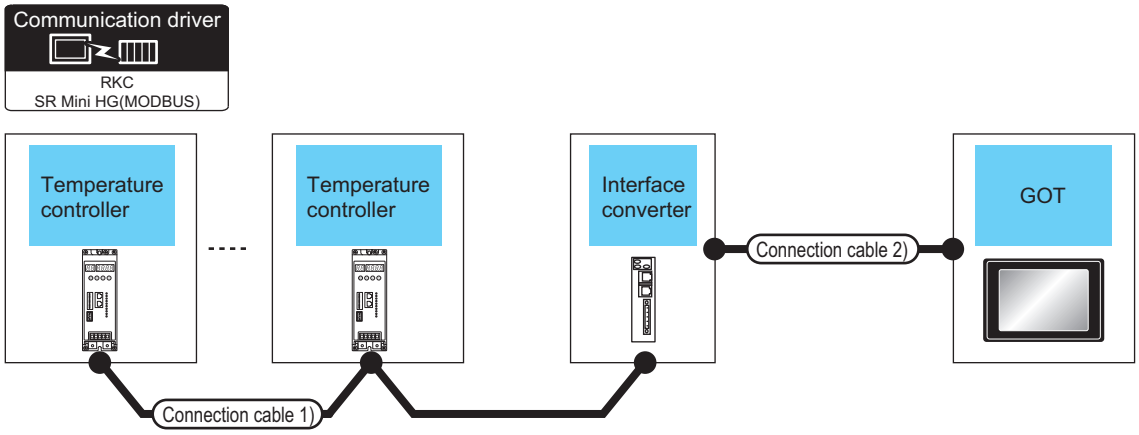

Temperature controller	Connection cable 1)	Max. distance	Interface converter*1		Connection cable 2)		GOT		Number of connectable equipment
Model name	Cable model*1 Connection diagram number		Model name	Communication Type	Cable model Connection diagram number	Max. distance	Option device*2	Model	
THV-A1	W-BF-02-0500 (0.5m) W-BF-02-1000 (1m) W-BF-02-3000 (3m)	1000m	COM-A	RS-232	W-BF-28-0500 (0.5m)*1 W-BF-28-1000 (1m)*1 W-BF-28-3000 (3m)*1 or User preparing Page 366 RS-232 connection diagram 2)	15m	- (Built into GOT)	GT27 GT25 GT23	Up to 31 temperature controllers for 1 GOT
							GT15-RS2-9P	GT27 GT25	

*1 Product manufactured by RKC. For details of the product, contact RKC.
*2 GT25-W, GT2505-V does not support the option device.

When connecting to multiple temperature controllers with interface converter (CD485V)

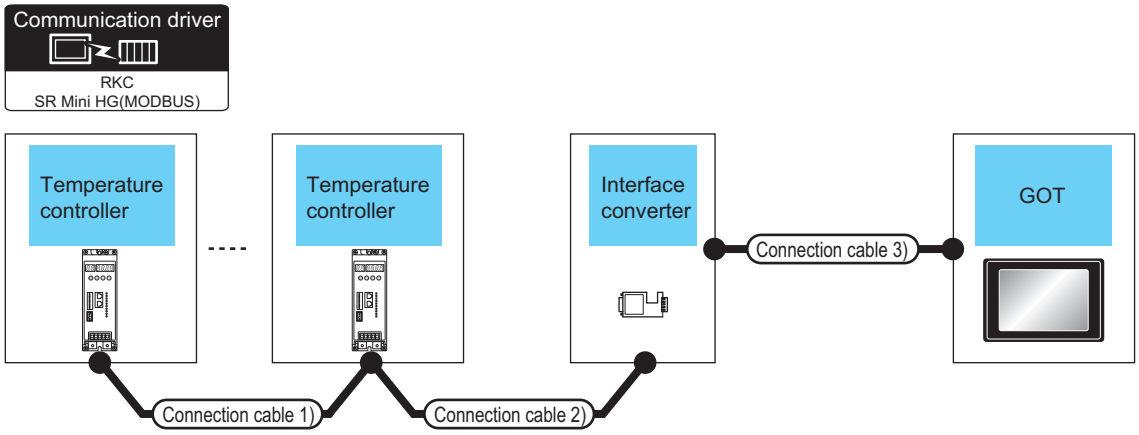

Temperature controller	Connection cable 1)	Connection cable 2)	Max. distance	Interface converter*1		Connection cable 3)		GOT		Number of connectable equipment
Model name	Cable model Connection diagram number	Cable model Connection diagram number		Model name	Communication Type	Cable model Connection diagram number	Max. distance	Option device*2	Model	
THV-A1	W-BF-02-0500 (0.5m)*1 W-BF-02-1000 (1m)*1 W-BF-02-3000 (3m)*1	User preparing Page 377 RS-485 connection diagram 6)	1200m	CD485/V	RS-232	User preparing Page 366 RS-232 connection diagram 3)	15m	- (Built into GOT)	GT27 GT25 GT23	Up to 31 temperature controllers for 1 GOT
								GT15-RS2-9P	GT27 GT25	
	User preparing Page 377 RS-485 connection diagram 6)		1200m	CD485/V	RS-232	User preparing Page 366 RS-232 connection diagram 3)	15m	- (Built into GOT)	GT27 GT25 GT23	
								GT15-RS2-9P	GT27 GT25	

*1 Product manufactured by RKC. For details of the product, contact RKC.
*2 GT25-W, GT2505-V does not support the option device.

Connecting to SRX series

When connecting to temperature control module (X-TIO) with a converter

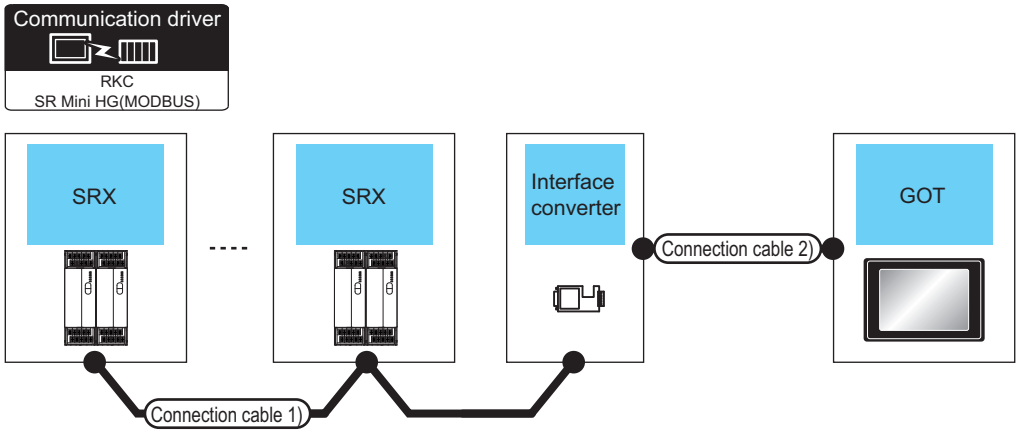

Temperature controller	Connection cable 1)		Interface Converter		Connection cable 2)		GOT		Number of connectable equipment
Model name	Cable model Connection diagram number	Max. distance	Model name	Communication Type	Cable model Connection diagram number	Max. distance	Option device*2	Model	
X-TIO	User preparing Page 377 RS-485 connection diagram 6)	1200m	CD485/V*1	RS-232	User preparing Page 366 RS-232 connection diagram 3)	15m	- (Built into GOT)	GT27 GT25 GT23	X-TIO: Up to 31 Total of X-TIO, X-DI and X-DO: Up to 31 for 1 GOT
							GT15-RS2-9P	GT27 GT25	

*1 Product manufactured by DATA LINK Co.,Ltd. For details of the product, contact DATA LINK Co.,Ltd.

*2 GT25-W, GT2505-V does not support the option device.

When connecting directly to temperature control module (X-TIO)

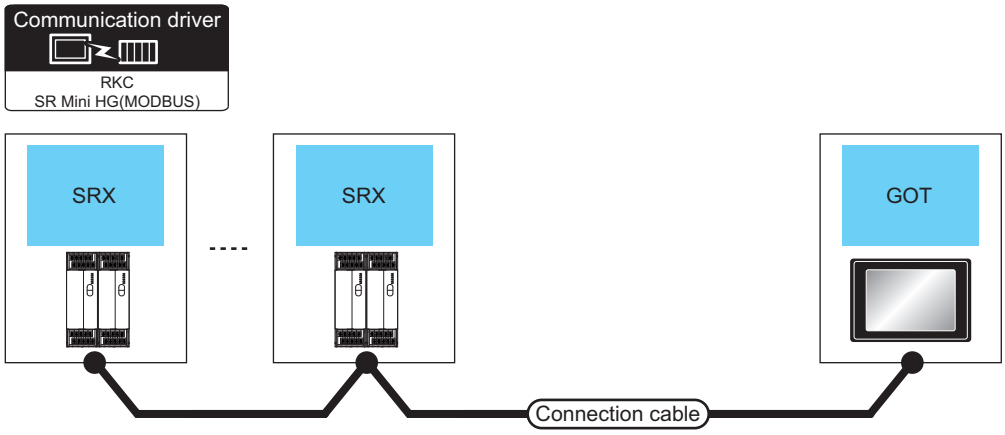

Temperature controller		Connection cable		GOT		Number of connectable equipment
Model name	Communication Type	Cable model Connection diagram number	Max. distance	Option device	Model	
X-TIO	RS-485	User preparing Page 375 RS-485 connection diagram 4)	1200m	- (Built into GOT)	GT27 GT25 GT23	X-TIO: Up to 31 Total of X-TIO, X-DI and X-DO: Up to 31 for 1 GOT
		User preparing Page 376 RS-485 connection diagram 5)	1200m	GT15-RS4-TE	GT27 GT25 *1	
		User preparing Page 380 RS-485 connection diagram 12)	1200m	GT14-RS2T4-9P *2	GT25 *3	

*1 Not available to GT25-W and GT2505-V.
*2 Connect it to the RS-232 interface (built in the GOT).
*3 Only available to GT2505-V.

Connecting to SB1 series

When connecting to multiple temperature controllers

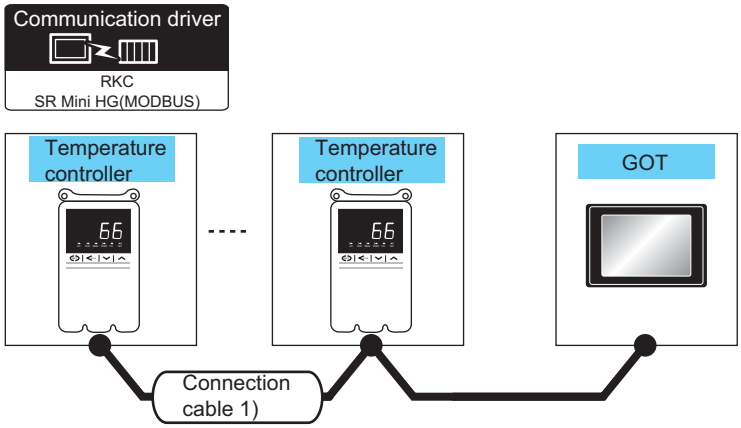

Temperature controller		Connection cable 1)	Max. distance	GOT		Number of connectable equipment
Model name	Communication Type	Cable model Connection diagram number		Option device	Model	
SB1	RS-485	User preparing Page 375 RS-485 connection diagram 4)	1200m	- (Built into GOT)	GT27 GT25 GT23	Up to 31 temperature controllers for 1 GOT
		User preparing Page 376 RS-485 connection diagram 5)	1200m	GT15-RS4-TE	GT27 GT25 *1	
		User preparing Page 380 RS-485 connection diagram 12)	1200m	GT14-RS2T4-9P *2	GT25 *3	

*1 Not available to GT25-W and GT2505-V.
*2 Connect it to the RS-232 interface (built in the GOT).
*3 Only available to GT2505-V.

When connecting to multiple temperature controllers with interface converter (CD485V)

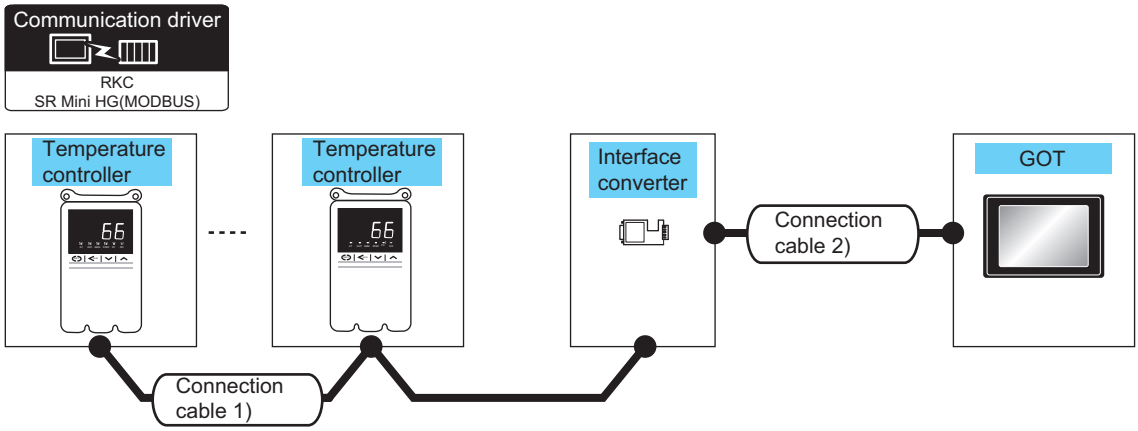

Temperature controller	Connection cable 1)		Converter*1		Connection cable 2)		GOT		Number of connectable equipment
Model name	Cable model Connection diagram number*1	Max. distance	Model name	Communication Type	Cable model Connection diagram number	Max. distance	Option device*3	Model	
SB1	User preparing Page 377 RS-485 connection diagram 6)	1200m	CD485/V*2	RS-232	User preparing Page 366 RS-232 connection diagram 3)	15m	- (Built into GOT)	GT27 GT25 GT23	Up to 31 temperature controllers for 1 GOT
							GT15-RS2-9P	GT27 GT25	

*1 Product manufactured by RKC. For details of the product, contact RKC.
*2 Product manufactured by DATA LINK Co.,Ltd. For details of the product, contact DATA LINK Co.,Ltd.
*3 GT25-W, GT2505-V does not support the option device.

Connecting to B400 series

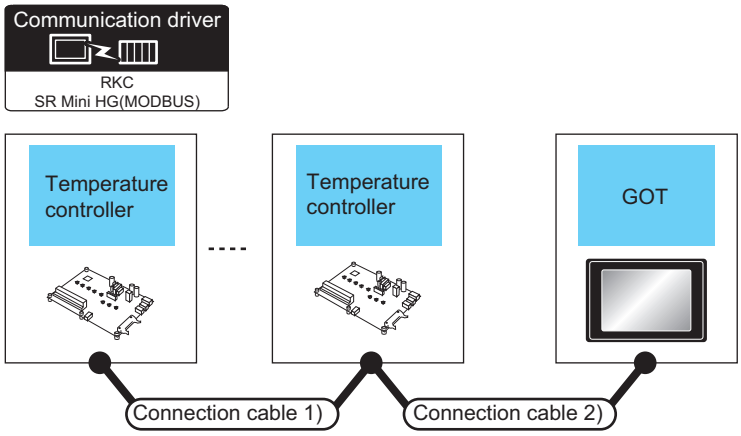

Temperature controller		Connection cable 1)	Connection cable 2)	Max. distance	GOT		Number of connectable equipment
Model name	Communication Type	Cable model Connection diagram number	Cable model Connection diagram number		Option device	Model	
B400 (RS-422 specifications)	RS-422	User preparing Page 369 RS-422 connection diagram 3)	User preparing Page 370 RS-422 connection diagram 4)	1200m	- (Built into GOT)	GT27 GT25 GT23	Up to 31 temperature controllers for 1 GOT
					GT15-RS4-9S	GT27 GT25 *1	
			User preparing Page 371 RS-422 connection diagram 6)	1000m	GT14-RS2T4-9P *2	GT25 *3	
B400 (RS-485 specifications)	RS-485	User preparing Page 375 RS-485 connection diagram 4)		1200m	- (Built into GOT)	GT27 GT25 GT23	Up to 31 temperature controllers for 1 GOT
		User preparing Page 376 RS-485 connection diagram 5)		1200m	GT15-RS4-TE	GT27 GT25 *1	
		User preparing Page 380 RS-485 connection diagram 12)		1200m	GT14-RS2T4-9P *2	GT25 *3	

*1 Not available to GT25-W and GT2505-V.
*2 Connect it to the RS-232 interface (built in the GOT).
*3 Only available to GT2505-V.

Connecting to FZ series

When connecting to multiple temperature controllers with interface converter (COM-A)

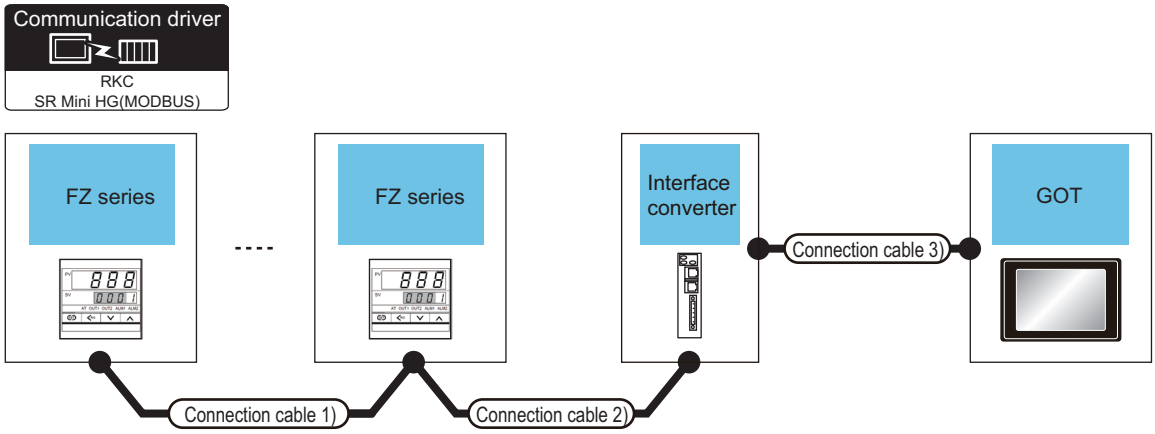

Temperature controller	Connection cable 1)	Connection cable 2)	Max. distance	Converter*2		Connection cable 3)		GOT		Number of connectable equipment
Model name	Cable model Connection diagram number	Cable model Connection diagram number		Model name	Communication Type	Cable model Connection diagram number	Max. distance	Option device*3	Model	
FZ400 FZ900	User preparing Page 369 RS-422 connection diagram 3)	W-BF-01-0500(0.5m)*1 W-BF-01-1000(1m)*1 W-BF-01-3000(3m)*1	1000m*2	COM-A	RS-232	W-BF-28-0500(0.5m)*1 W-BF-28-1000(1m)*1 W-BF-28-3000(3m)*1 or User preparing Page 366 RS-232 connection diagram 2)	15m	- (Built into GOT)	GT27 GT25	Up to 31 temperature controllers for 1 GOT
								GT15-RS2-9P	GT27 GT25	

*1 Product manufactured by RKC. For details of the product, contact RKC.
*2 The total length of the connection cable 1) + connection cable 2)
*3 GT25-W, GT2505-V does not support the option device.

When connecting to multiple temperature controllers with interface converter (CD485/V)

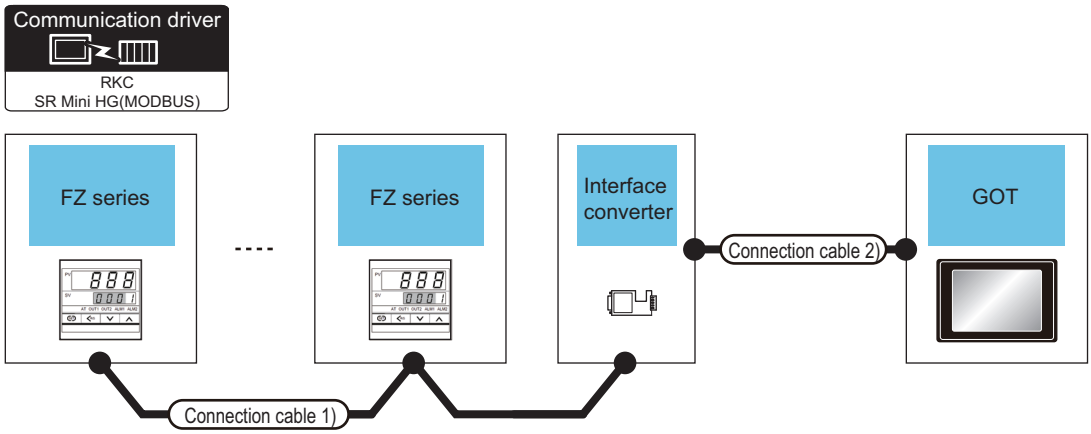

Temperature controller	Connection cable 1)		Converter*1		Connection cable 2)		GOT		Number of connectable equipment
Model name	Cable model Connection diagram number	Max. distance	Model name	Communication Type	Cable model Connection diagram number	Max. distance	Option device*2	Model	
FZ110 FZ400 FZ900	User preparing Page 377 RS-485 connection diagram 6)	1200m	CD485/V	RS-232	User preparing Page 366 RS-232 connection diagram 3)	15m	- (Built into GOT)	GT27 GT25	Up to 31 temperature controllers for 1 GOT
							GT15-RS2-9P	GT27 GT25	

*1 Product manufactured by DATA LINK Co.,Ltd. For details of the product, contact DATA LINK Co.,Ltd.
*2 GT25-W, GT2505-V does not support the option device.

When connecting directly to a temperature controller by RS-422

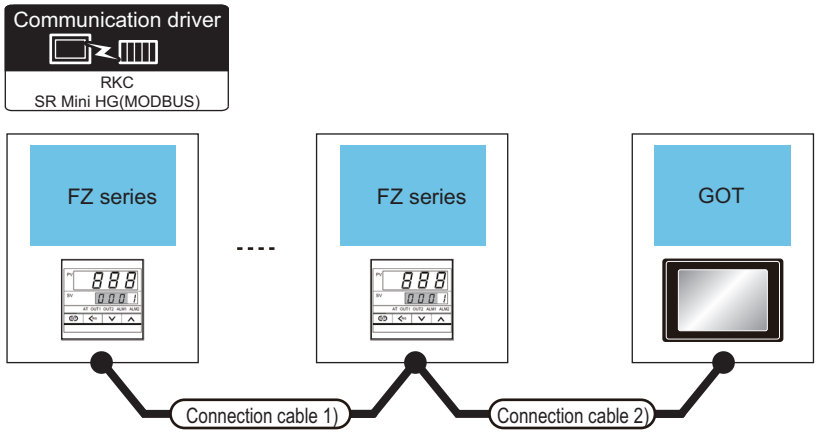

Temperature controller		Connection cable 1)	Connection cable 2)	Max. distance	GOT		Number of connectable equipment
Model name	Communication Type	Cable model Connection diagram number	Cable model Connection diagram number		Option device*2	Model	
FZ400 FZ900	RS-422	User preparing Page 369 RS-422 connection diagram 3)	User preparing Page 370 RS-422 connection diagram 4)	1000m*1	- (Built into GOT)	GT27 GT25	Up to 31 temperature controllers for 1 GOT
					GT15-RS4-9S	GT27 GT25	

*1 The total length of the connection cable 1) + connection cable 2)
*2 GT25-W, GT2505-V does not support the option device.

When connecting directly to a temperature controller by RS-485

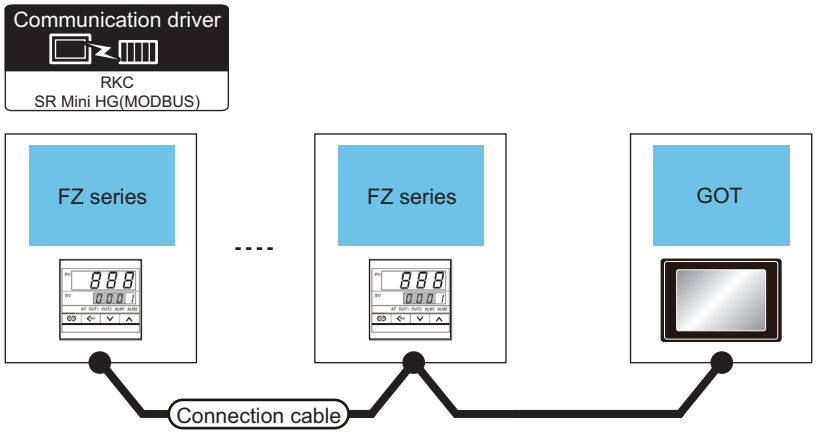

Temperature controller		Connection cable		GOT		Number of connectable equipment
Model name	Communication Type	Cable model Connection diagram number	Max. distance	Option device	Model	
FZ110 FZ400 FZ900	RS-485	User preparing Page 375 RS-485 connection diagram 4)	1200m	- (Built into GOT)	GT27 GT25	Up to 31 temperature controllers for 1 GOT
		User preparing Page 376 RS-485 connection diagram 5)	1200m	GT15-RS4-TE	GT27 GT25 *1	
		User preparing Page 380 RS-485 connection diagram 12)	1200m	GT14-RS2T4-9P *2	GT25 *3	

*1 Not available to GT25-W and GT2505-V.
*2 Connect it to the RS-232 interface (built in the GOT).
*3 Only available to GT2505-V.

Connecting to RZ series

When using the converter

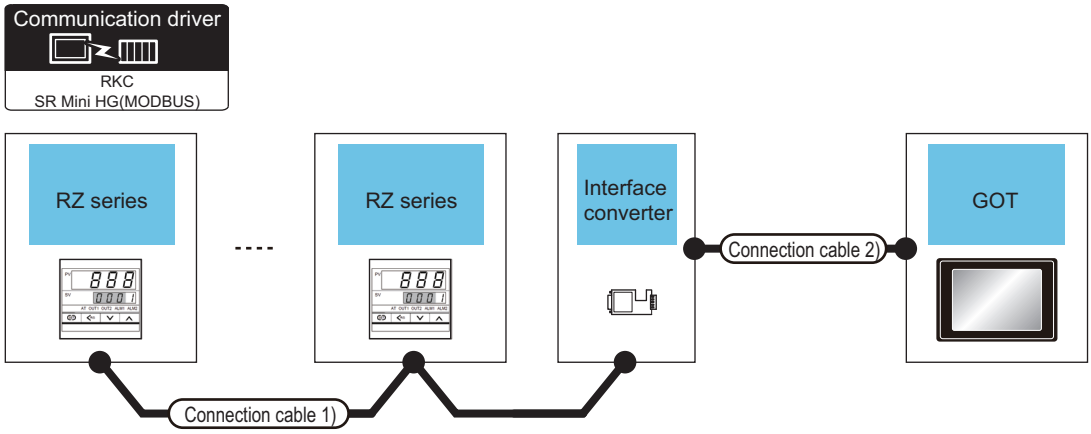

Temperature controller	Connection cable 1)		Converter*1		Connection cable 2)		GOT		Number of connectable equipment
Model name	Cable model Connection diagram number	Max. distance	Model name	Communication Type	Cable model Connection diagram number	Max. distance	Option device*2	Model	
RZ100 RZ400	User preparing Page 377 RS-485 connection diagram 6)	1200m	CD485/V	RS-232	User preparing Page 366 RS-232 connection diagram 3)	15m	- (Built into GOT)	GT27 GT25	Up to 31 temperature controllers for 1 GOT
							GT15-RS2-9P	GT27 GT25	

*1 Product manufactured by DATA LINK Co.,Ltd. For details of the product, contact DATA LINK Co.,Ltd.
*2 GT25-W, GT2505-V does not support the option device.

When connecting directly

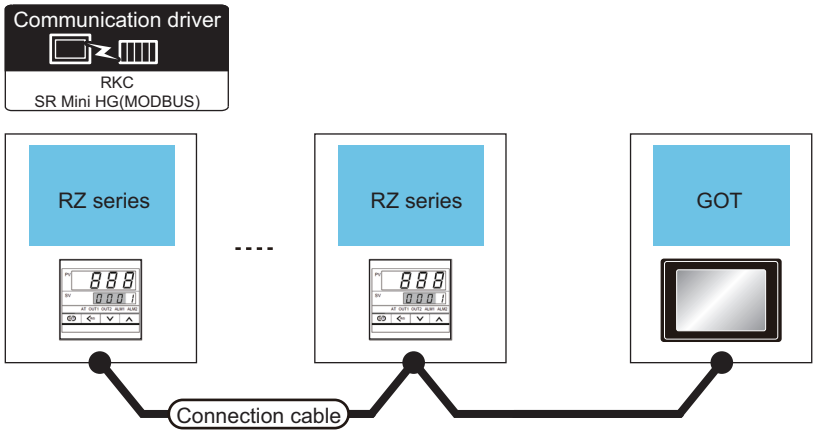

Temperature controller		Connection cable		GOT		Number of connectable equipment
Model name	Communication Type	Cable model Connection diagram number	Max. distance	Option device	Model	
RZ100 RZ400	RS-485	User preparing Page 375 RS-485 connection diagram 4)	1200m	- (Built into GOT)	GT27 GT25	Up to 31 temperature controllers for 1 GOT
		User preparing Page 376 RS-485 connection diagram 5)	1200m	GT15-RS4-TE	GT27 GT25 *1	
		User preparing Page 380 RS-485 connection diagram 12)	1200m	GT14-RS2T4-9P *2	GT25 *3	

*1 Not available to GT25-W and GT2505-V.
*2 Connect it to the RS-232 interface (built in the GOT).
*3 Only available to GT2505-V.

Connecting to PZ series

When connecting to multiple temperature controllers with interface converter (COM-A)

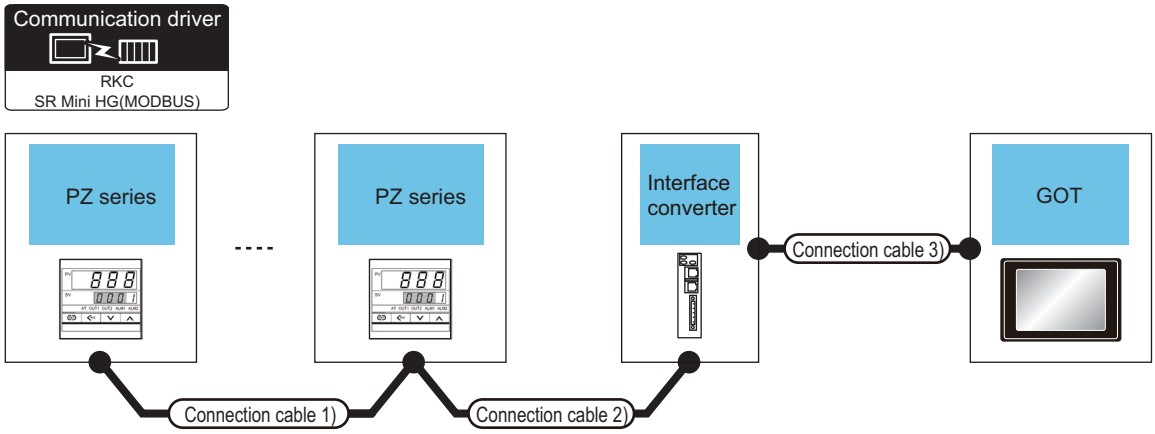

Temperature controller	Connection cable 1)	Connection cable 2) *1	Max. distance	Converter*1		Connection cable 3)		GOT		Number of connectable equipment
Model name	Cable model Connection diagram number	Cable model Connection diagram number		Model name	Communication Type	Cable model Connection diagram number	Max. distance	Option device	Model	
PZ400 PZ900	User preparing Page 369 RS-422 connection diagram 3)	W-BF-01-0500(0.5m) W-BF-01-1000(1m) W-BF-01-3000(3m)	1000m*2	COM-A	RS-232	W-BF-28-0500(0.5m)*1 W-BF-28-1000(1m)*1 W-BF-28-3000(3m)*1 or User preparing Page 366 RS-232 connection diagram 2)	15m	- (Built into GOT)	GT27 GT25 GT23	Up to 31 temperature controllers for 1 GOT
								GT15-RS2-9P *3	GT27 GT25	

*1 Product manufactured by RKC. For details of the product, contact RKC.
*2 The total length of the connection cable 1) + connection cable 2)
*3 GT25-W, GT2505-V does not support the option device.

When connecting to multiple temperature controllers with interface converter (CD485/V)

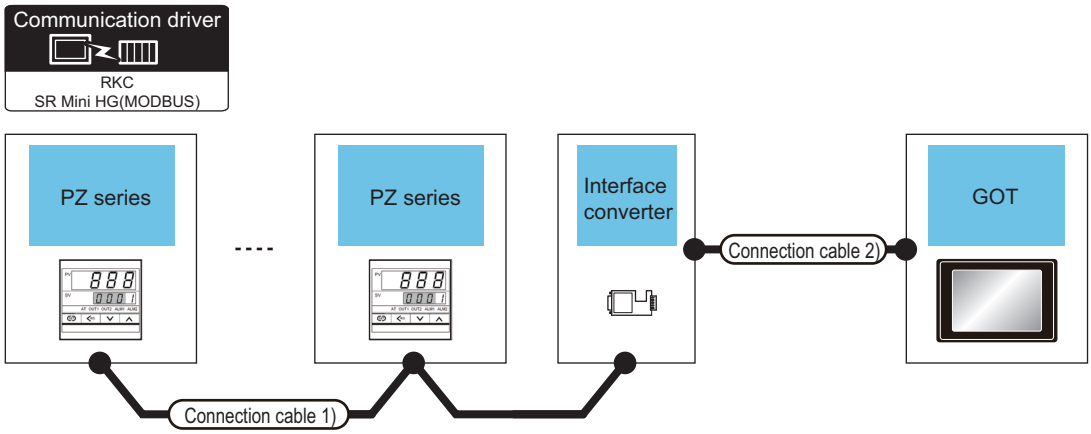

Temperature controller	Connection cable 1)		Converter*1		Connection cable 2)		GOT		Number of connectable equipment
Model name	Cable model Connection diagram number	Max. distance	Model name	Communication Type	Cable model Connection diagram number	Max. distance	Option device	Model	
PZ400 PZ900	User preparing Page 377 RS-485 connection diagram 6)	1200m	CD485/V	RS-232	User preparing Page 366 RS-232 connection diagram 3)	15m	- (Built into GOT)	GT27 GT25 GT23	Up to 31 temperature controllers for 1 GOT
							GT15-RS2-9P *2	GT27 GT25	

*1 Product manufactured by DATA LINK Co.,Ltd. For details of the product, contact DATA LINK Co.,Ltd.
*2 GT25-W, GT2505-V does not support the option device.

When connecting directly to a temperature controller by RS-422

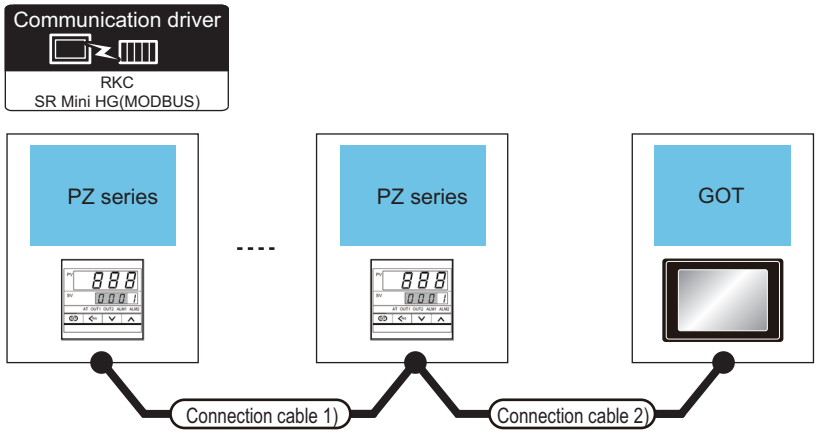

Temperature controller		Connection cable 1)	Connection cable 2)	Max. distance	GOT		Number of connectable equipment
Model name	Communication Type	Cable model Connection diagram number	Cable model Connection diagram number		Option device	Model	
PZ400 PZ900	RS-422	User preparing Page 369 RS-422 connection diagram 3)	User preparing Page 370 RS-422 connection diagram 4)	1000m*1	- (Built into GOT)	GT27 GT25 GT23	Up to 31 temperature controllers for 1 GOT
					GT15-RS4-9S *2	GT27 GT25	

*1 The total length of the connection cable 1) + connection cable 2)
*2 GT25-W, GT2505-V does not support the option device.

When connecting directly to a temperature controller by RS-485

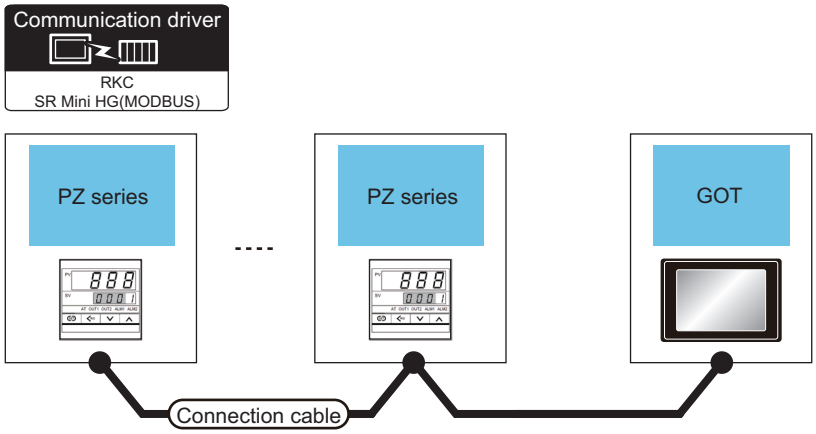

Temperature controller		Connection cable		GOT		Number of connectable equipment
Model name	Communication Type	Cable model Connection diagram number	Max. distance	Option device	Model	
PZ400 PZ900	RS-485	User preparing Page 375 RS-485 connection diagram 4)	1200m	- (Built into GOT)	GT27 GT25 GT23	Up to 31 temperature controllers for 1 GOT
		User preparing Page 376 RS-485 connection diagram 5)	1200m	GT15-RS4-TE *1	GT27 GT25	
		User preparing Page 380 RS-485 connection diagram 12)	1200m	GT14-RS2T4-9P *2	GT25 *3	

*1 Not available to GT25-W and GT2505-V.
*2 Connect it to the RS-232 interface (built in the GOT).
*3 Only available to GT2505-V.

Connecting to GZ series

When connecting to multiple temperature controllers with interface converter (COM-A)

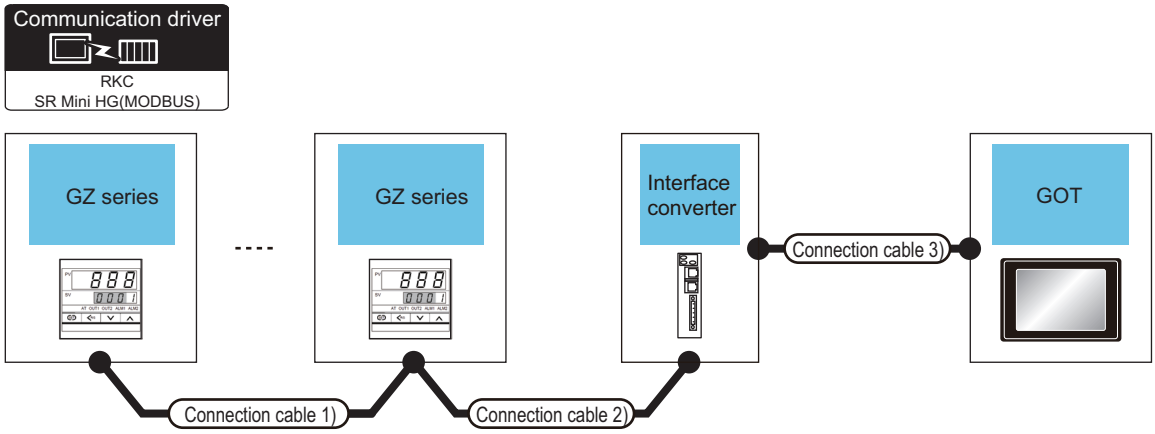

Temperature controller	Connection cable 1)	Connection cable 2) *1	Max. distance	Converter*1		Connection cable 3)		GOT		Number of connectable equipment
Model name	Cable model Connection diagram number	Cable model Connection diagram number		Model name	Communication Type	Cable model Connection diagram number	Max. distance	Option device	Model	
GZ400 GZ900	User preparing Page 369 RS-422 connection diagram 3)	W-BF-01-0500(0.5m) W-BF-01-1000(1m) W-BF-01-3000(3m)	1000m*2	COM-A	RS-232	W-BF-28-0500(0.5m)*1 W-BF-28-1000(1m)*1 W-BF-28-3000(3m)*1 or User preparing Page 366 RS-232 connection diagram 2)	15m	- (Built into GOT)	GT27 GT25 GT23	Up to 31 temperature controllers for 1 GOT
								GT15-RS2-9P *3	GT27 GT25	

*1 Product manufactured by RKC. For details of the product, contact RKC.
*2 The total length of the connection cable 1) + connection cable 2)
*3 GT25-W, GT2505-V does not support the option device.

When connecting to multiple temperature controllers with interface converter (CD485/V)

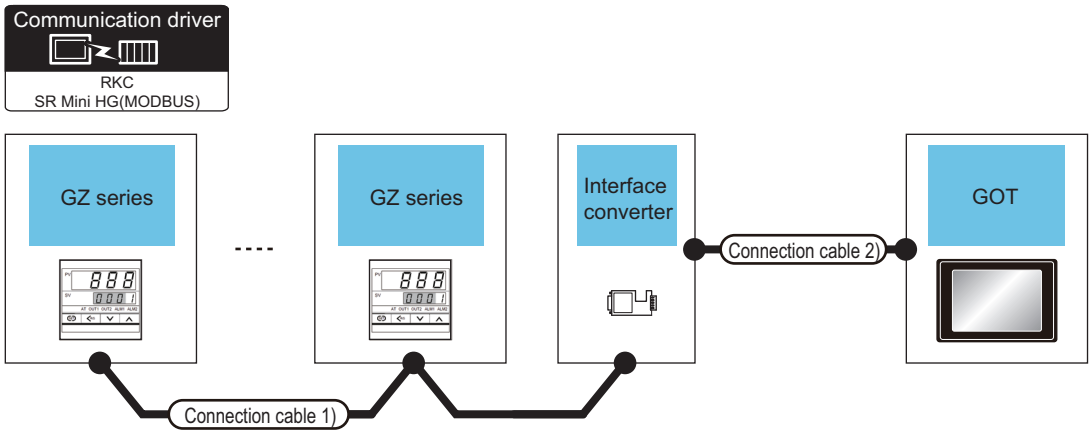

Temperature controller	Connection cable 1)		Converter*1		Connection cable 2)		GOT		Number of connectable equipment
Model name	Cable model Connection diagram number	Max. distance	Model name	Communication Type	Cable model Connection diagram number	Max. distance	Option device	Model	
GZ400 GZ900	User preparing Page 377 RS-485 connection diagram 6)	1200m	CD485/V	RS-232	User preparing Page 366 RS-232 connection diagram 3)	15m	- (Built into GOT)	GT27 GT25 GT23	Up to 31 temperature controllers for 1 GOT
							GT15-RS2-9P *2	GT27 GT25	

*1 Product manufactured by DATA LINK Co.,Ltd. For details of the product, contact DATA LINK Co.,Ltd.
*2 GT25-W, GT2505-V does not support the option device.

When connecting directly to a temperature controller by RS-422

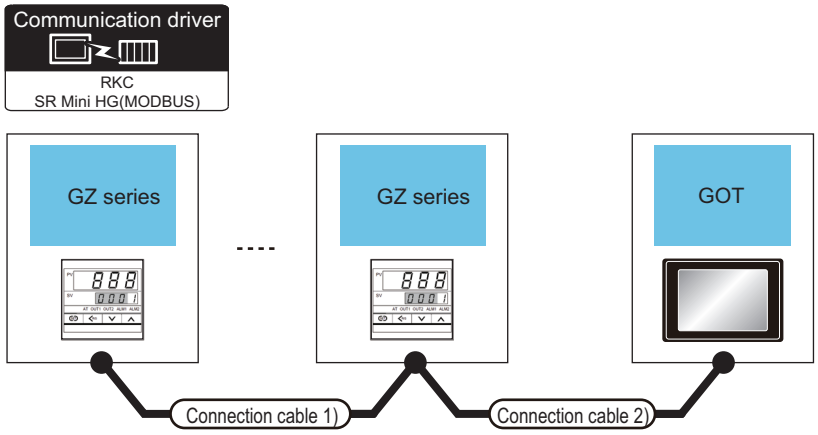

Temperature controller		Connection cable 1)	Connection cable 2)	Max. distance	GOT		Number of connectable equipment
Model name	Communication Type	Cable model Connection diagram number	Cable model Connection diagram number		Option device	Model	
GZ400 GZ900	RS-422	User preparing Page 369 RS-422 connection diagram 3)	User preparing Page 370 RS-422 connection diagram 4)	1000m*1	- (Built into GOT)	GT27 GT25 GT23	Up to 31 temperature controllers for 1 GOT
					GT15-RS4-9S *2	GT27 GT25	

*1 The total length of the connection cable 1) + connection cable 2)
*2 GT25-W, GT2505-V does not support the option device.

When connecting directly to a temperature controller by RS-485

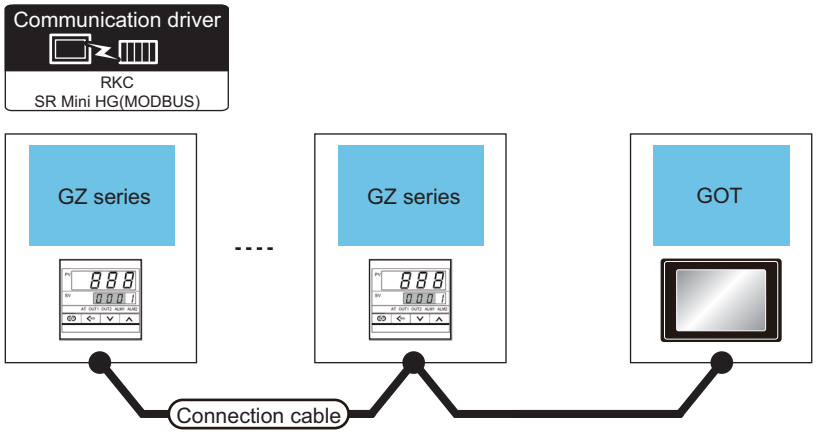

Temperature controller		Connection cable		GOT		Number of connectable equipment
Model name	Communication Type	Cable model Connection diagram number	Max. distance	Option device	Model	
GZ400 GZ900	RS-485	User preparing Page 375 RS-485 connection diagram 4)	1200m	- (Built into GOT)	GT27 GT25 GT23	Up to 31 temperature controllers for 1 GOT
		User preparing Page 376 RS-485 connection diagram 5)	1200m	GT15-RS4-TE *1	GT27 GT25	
		User preparing Page 380 RS-485 connection diagram 12)	1200m	GT14-RS2T4-9P *2	GT25 *3	

*1 Not available to GT25-W and GT2505-V.
*2 Connect it to the RS-232 interface (built in the GOT).
*3 Only available to GT2505-V.

10.3 Connection Diagram

The following diagram shows the connection between the GOT and the temperature controller.

RS-232 cable

Connection diagram

■RS-232 connection diagram 1)

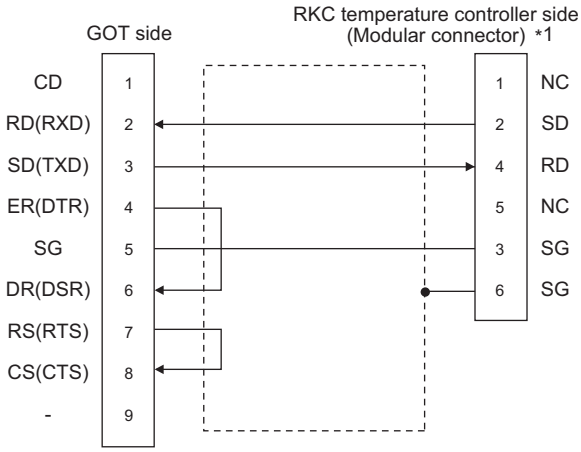

*1 For details of the pin assignment, refer to the following manual.
User's Manual of the RKC temperature controller

■RS-232 connection diagram 2)

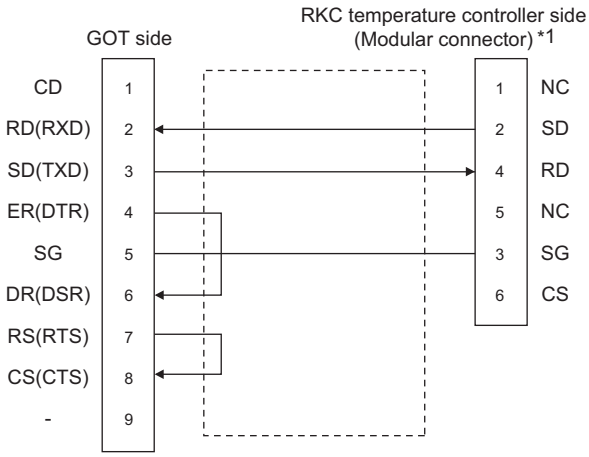

*1 For details of the pin assignment, refer to the following manual.
User's Manual of the RKC temperature controller

■RS-232 connection diagram 3)

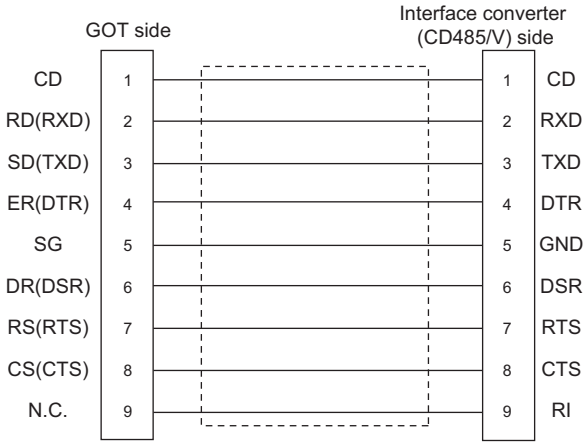

■RS-232 connection diagram 4)

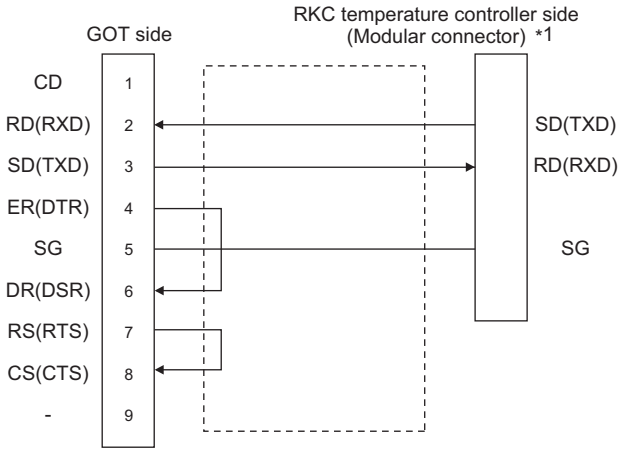

*1 For the terminal number of the temperature controller, refer to the following table.

Signal name	Terminal No.				
	FB400 FB900	PF900 PF901	HA400/401 HA900/901		MA900 MA901
			Communication 1	Communication 2	
SG	25	25	13	25	44
SD(TXD)	26	26	14	26	45
RD(RXD)	27	27	15	27	46

Precautions when preparing a cable

■Cable length

The length of the RS-232 cable must be 15m or less.

■GOT side connector

For the GOT side connector, refer to the following.

☞ Page 58 GOT connector specifications

■RKC temperature controller side connector

Use the connector compatible with the RKC temperature controller side module.

For details, refer to user's manual of the RKC temperature controller side.

RS-422 cable

Point

Differences in polarity between GOT and RKC temperature controllers

The polarity of poles A and B in signal names is reversed between GOT and RKC temperature controllers. Connect a cable according to the following connection diagrams.

Connection diagram

■RS-422 connection diagram 1)

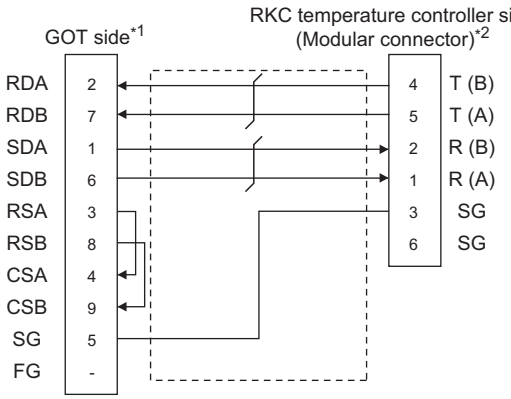

*1 For GT27 and GT25 (except for GT2505-V), set the terminating resistor to "Disable".
For GT2505-V, set the terminating resistor to "330 Ω".
☞ Page 381 Connecting terminating resistors

*2 For details of the pin assignment, refer to the following manual.
User's Manual of the RKC temperature controller

■RS-422 connection diagram 2)

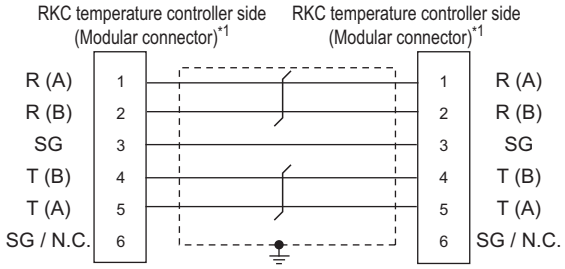

*1 For details of the pin assignment, refer to the following manual.
User's Manual of the RKC temperature controller

■RS-422 connection diagram 3)

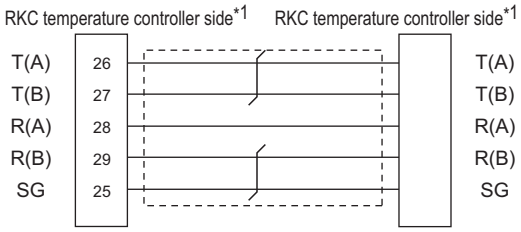

*1 For the terminal number of the temperature controller, refer to the following table

Signal name	Terminal No.				
	FB400 FB900	PF900/901 AG500 HA400/401 HA900/901	MA900 MA901	B400 (RS-422 specifications)	FZ400 FZ900 PZ400 PZ900 GZ400 GZ900
SG	25	25	44	3/6	34
T(A)	26	26	45	5	35
T(B)	27	27	46	4	36
R(A)	28	28	47	1	32
R(B)	29	29	48	2	33

■RS-422 connection diagram 4)

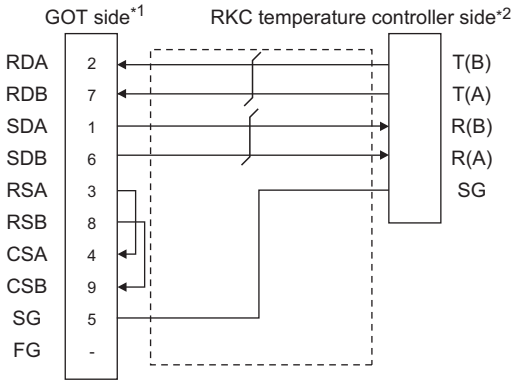

*1 For GT27 and GT25 (except for GT2505-V), set the terminating resistor to "Disable".
For GT2505-V, set the terminating resistor to "330 Ω".
☞ Page 381 Connecting terminating resistors

*2 For the terminal number of the temperature controller, refer to the following table

Signal name	Terminal No.					
	FB400 FB900	**PF900/901 AG500 HA400/401 HA900/901**	**MA900 MA901**	**THV-A1*3**	**B400 (RS-422 specifications)**	**FZ400 FZ900 PZ400 PZ900 GZ400 GZ900**
SG	25	25	44	3	3/6	34
T(A)	26	26	45	5	5	35
T(B)	27	27	46	4	4	36
R(A)	28	28	47	1	1	32
R(B)	29	29	48	2	2	33

*3 The following shows the pin assignment of the modular connector.

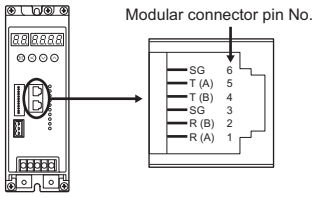

■RS-422 connection diagram 5)

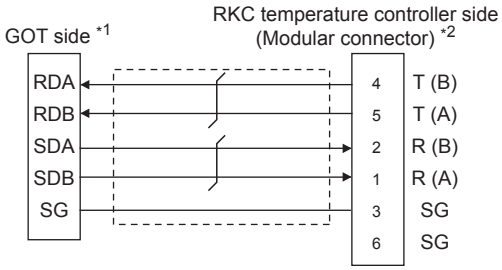

*1 Set the 2-wire/4-wire terminating resistor setting switch of the RS-232/485 signal conversion adapter as shown below.
2-wire/4-wire: 4-wire (2 pairs)
Terminating resistor: 330Ω
☞ Page 67 Setting the RS-232/485 signal conversion adaptor

*2 For details of the pin assignment, refer to the following manual.
User's Manual of the RKC temperature controller

■RS-422 connection diagram 6)

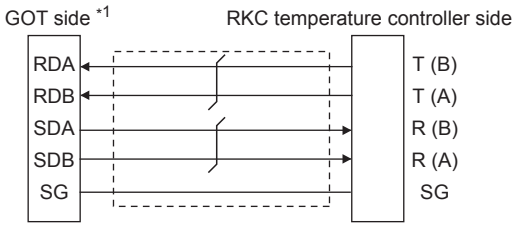

*1 Set the 2-wire/4-wire terminating resistor setting switch of the RS-232/485 signal conversion adapter as shown below.
2-wire/4-wire: 4-wire (2 pairs)
Terminating resistor: 330Ω
☞ Page 67 Setting the RS-232/485 signal conversion adaptor

*2 For the terminal number of the temperature controller, refer to the following table

Signal name	Terminal No.					
	FB400 FB900	PF900/901 AG500 HA400/401 HA900/901	MA900 MA901	THV-A1*3	B400 (RS-422 specifications)	FZ400 FZ900
SG	25	25	44	3	3/6	34
T(A)	26	26	45	5	5	35
T(B)	27	27	46	4	4	36
R(A)	28	28	47	1	1	32
R(B)	29	29	48	2	2	33

*3 The following shows the pin assignment of the modular connector.

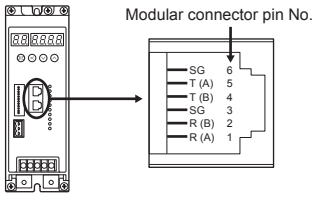

Precautions when preparing a cable

■Cable length

The length of the RS-422 cable must be within the maximum distance.

■GOT side connector

For the GOT side connector, refer to the following.

☞ Page 58 GOT connector specifications

■RKC temperature controller side connector

Use the connector compatible with the RKC temperature controller side module.

For details, refer to user's manual of the RKC temperature controller.

Connecting terminating resistors

■GOT side

Set the terminating resistor by operating the terminating resistor setting switch.

For the procedure to set the terminating resistor, refer to the following.

☞ Page 62 Terminating resistors of GOT

RS-485 cable

Connection diagram

■RS-485 connection diagram 1)

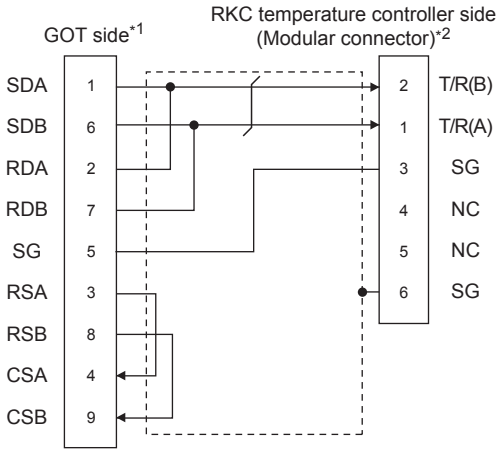

*1 Set the terminating resistor setting switch of the GOT main unit to "100 OHM".
☞ Page 381 Connecting terminating resistors

*2 For details of the pin assignment, refer to the following manual.
User's Manual of the RKC temperature controller

■RS-485 connection diagram 2)

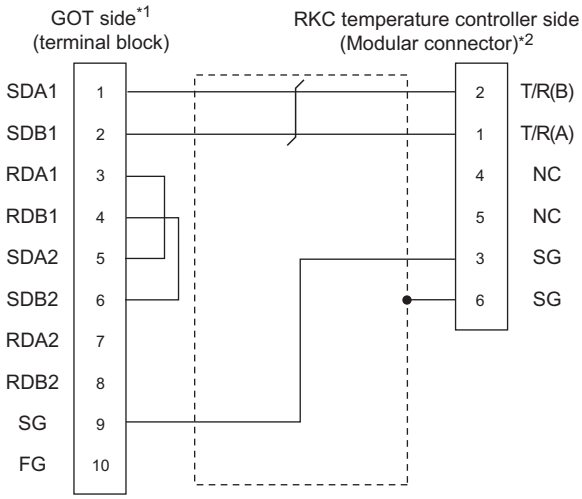

*1 Set the terminating resistor setting switch of the GOT main unit to "100 OHM".
☞ Page 381 Connecting terminating resistors

*2 For details of the pin assignment, refer to the following manual.
User's Manual of the RKC temperature controller

■RS-485 connection diagram 3)

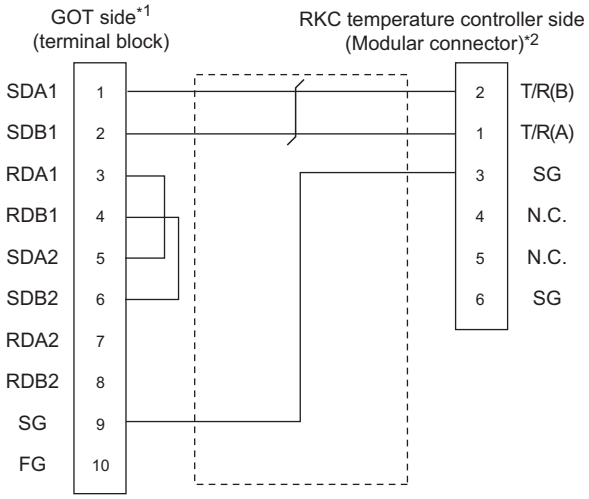

*1 Set the terminating resistor setting switch of the GOT main unit to "100 OHM".
☞ Page 381 Connecting terminating resistors

*2 For details of the pin assignment, refer to the following manual.
User's Manual of the RKC temperature controller

■RS-485 connection diagram 4)

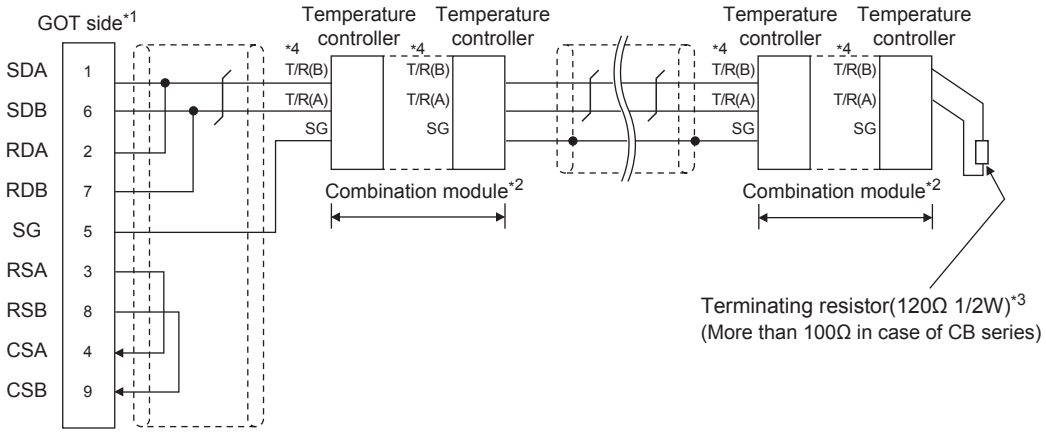

*1 Set the terminating resistor setting switch of the GOT main unit to "100 OHM".
☞ Page 381 Connecting terminating resistors

*2 When combining the module, because the communication line is connected between the modules with each other, wire only the communication terminal on the both end of the combination module.

*3 Terminating resistor should be provided for a temperature controller which will be a terminal. When using X-TIO, turn ON the terminating resistor selector in the terminal base. When combining the module, provide the terminating resistor to the end of the combination module (the one that is far from the converter).

*4 For the terminal number of the temperature controller, refer to the following table.

Signal name	Terminal No.								
	Z-TIO/ Z-CT	CB100/ CB400/ CB500/ CB900	CB700	FB100		FB400/FB90		RB100/ RB400/ RB500/ RB900	RB700
				Communication 1	Communication 2	Communication 1	Communication 2		
SG	5	13	7	13	16	25	25	13	25
T/R(A)	3	14	8	14	17	26	28	14	26
T/R(B)	4	15	9	15	18	27	29	15	27

Signal name	Terminal No.									
	PF900 PF901 AG500	HA400/401 HA900/901		MA900/ MA901	RMC500	X-TIO	SA100	SA200	SB1	B400 (RS-485 specifications)
		Communication 1	Communication 2							
SG	25	13	25	44	13	17	1	10	1	3/6
T/R(A)	26	14	26	45	14	16	2	11	2	1/5
T/R(B)	27	15	27	46	15	15	3	12	3	2/4

Signal name	Terminal No.		
	FZ110	FZ400 FZ900 PZ400 PZ900 GZ400 GZ900	RZ100 RZ400
SG	16	34	13
T/R(A)	17	35	14
T/R(B)	18	36	15

■RS-485 connection diagram 5)

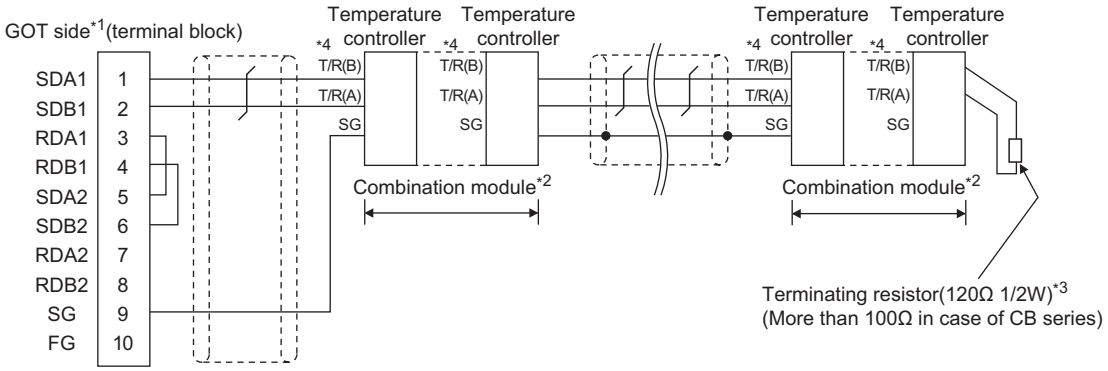

*1 Set the terminating resistor setting switch of the GOT main unit to "100 OHM".
☞ Page 381 Connecting terminating resistors

*2 When combining the module, because the communication line is connected between the modules with each other, wire only the communication terminal on the both end of the combination module.

*3 Terminating resistor should be provided for a temperature controller which will be a terminal. When using X-TIO, turn ON the terminating resistor selector in the terminal base. When combining the module, provide the terminating resistor to the end of the combination module (the one that is far from the converter).

*4 For the terminal number for connecting to FB series or RB series, refer to the table below.

Signal name	Terminal No.								
	Z-TIO/ Z-CT	CB100/ CB400/ CB500/ CB900	CB700	FB100		FB400/FB90		RB100/ RB400/ RB500/ RB900	RB700
				Communication 1	Communication 2	Communication 1	Communication 2		
SG	5	13	7	13	16	25	25	13	25
T/R(A)	3	14	8	14	17	26	28	14	26
T/R(B)	4	15	9	15	18	27	29	15	27

Signal name	Terminal No.									
	PF900 PF901 AG500	HA400/401 HA900/901		MA900/ MA901	RMC500	X-TIO	SA100	SA200	SB1	B400 (RS-485 specifications)
		Communication 1	Communication 2							
SG	25	13	25	44	13	17	1	10	1	3/6
T/R(A)	26	14	26	45	14	16	2	11	2	1/5
T/R(B)	27	15	27	46	15	15	3	12	3	2/4

Signal name	Terminal No.		
	FZ110	FZ400 FZ900 PZ400 PZ900 GZ400 GZ900	RZ100 RZ400
SG	16	34	13
T/R(A)	17	35	14
T/R(B)	18	36	15

■RS-485 connection diagram 6)

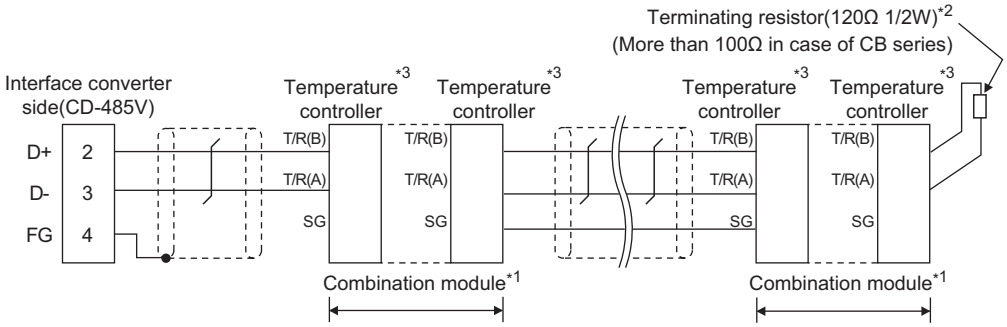

*1 When combining the module, because the communication line is connected between the modules with each other, wire only the communication terminal on the both end of the combination module.

*2 Terminating resistor should be provided for a temperature controller which will be a terminal. When using X-TIO, turn ON the terminating resistor selector in the terminal base. When combining the module, provide the terminating resistor to the end of the combination module (the one that is far from the converter).

*3 For the terminal number of the temperature controller, refer to the following table.

Signal name	Terminal No.								
	Z-TIO/ Z-CT	CB100/ CB400/ CB500/ CB900	CB700	FB100		FB400/FB90		RB100/ RB400/ RB500/ RB900	RB700
				Communication 1	Communication 2	Communication 1	Communication 2		
SG	5	13	7	13	16	25	25	13	25
T/R(A)	3	14	8	14	17	26	28	14	26
T/R(B)	4	15	9	15	18	27	29	15	27

Signal name	Terminal No.								
	PF900 PF901 AG500	HA400/401 HA900/901		MA900/ MA901	RMC500	THV-A1*4	X-TIO	SA100	SA200
		Communication 1	Communication 2						
SG	25	13	25	44	13	3	17	1	10
T/R(A)	26	14	26	45	14	1	16	2	11
T/R(B)	27	15	27	46	15	2	15	3	12

Signal name	Terminal No.			
	FZ110	FZ400 FZ900 PZ400 PZ900 GZ400 GZ900	RZ100 RZ400	SRJ
SG	16	34	13	3
T/R(A)	17	35	14	5
T/R(B)	18	36	15	4

*4 The following shows the pin assignment of the modular connector.

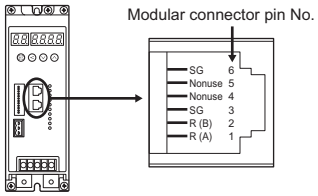

■RS-485 connection diagram 7)

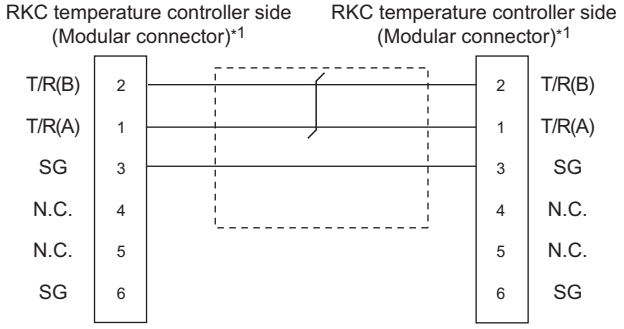

*1 For details of the pin assignment, refer to the following manual.
User's Manual of the RKC temperature controller

■RS-485 connection diagram 8)

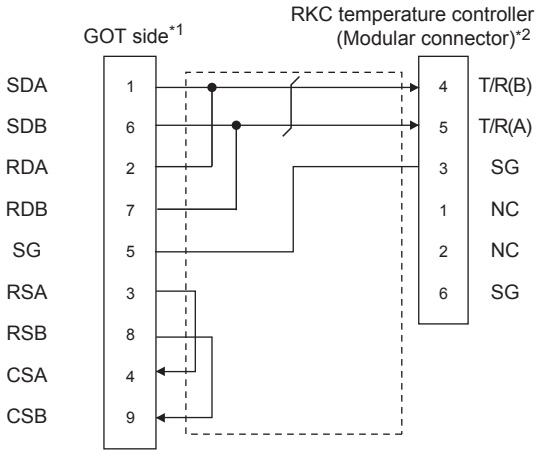

*1 Set the terminating resistor setting switch of the GOT main unit to "Enable".
☞ Page 381 Connecting terminating resistors
*2 For details of the pin assignment, refer to the following manual.
User's Manual of the RKC temperature controller

■RS-485 connection diagram 9)

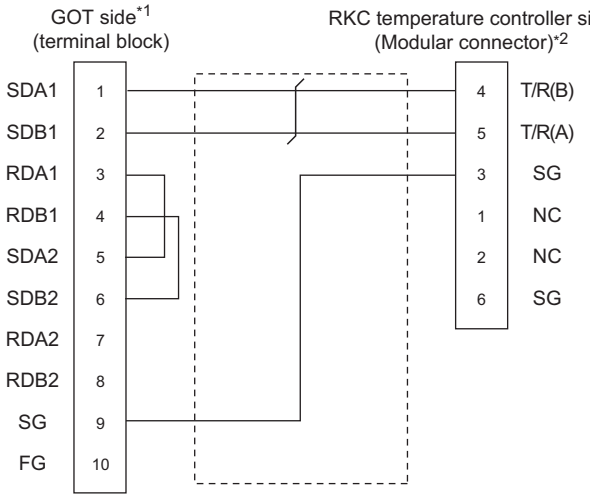

*1 Set the terminating resistor setting switch of the GOT main unit to "Enable".
☞ Page 381 Connecting terminating resistors
*2 For details of the pin assignment, refer to the following manual.
User's Manual of the RKC temperature controller

■RS-485 connection diagram 10)

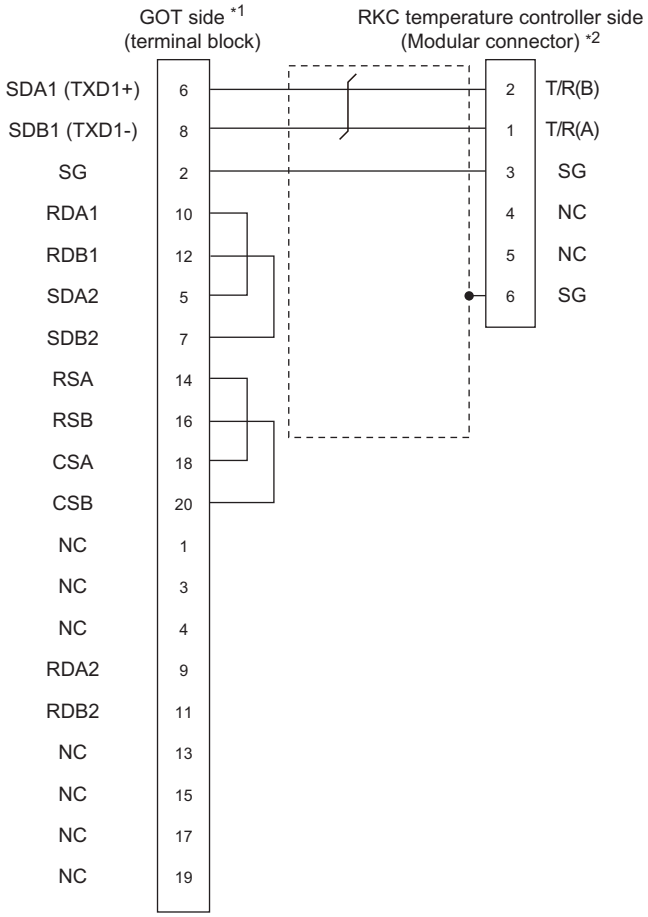

*1 Set the terminating resistor setting switch of the GOT main unit to "100 OHM".
☞ Page 381 Connecting terminating resistors

*2 For details of the pin assignment, refer to the following manual.
User's Manual of the RKC temperature controller

■RS-485 connection diagram 11)

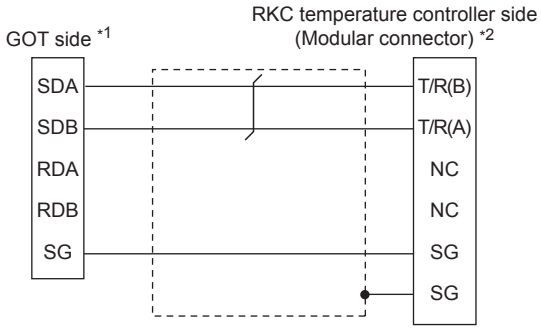

*1 Set the 2-wire/4-wire terminating resistor setting switch of the RS-232/485 signal conversion adapter as shown below.
2-wire/4-wire: 2-wire (1 pair)
Terminating resistor: 110Ω
☞ Page 67 Setting the RS-232/485 signal conversion adaptor

*2 For details of the pin assignment, refer to the following manual.
User's Manual of the RKC temperature controller

■RS-485 connection diagram 12)

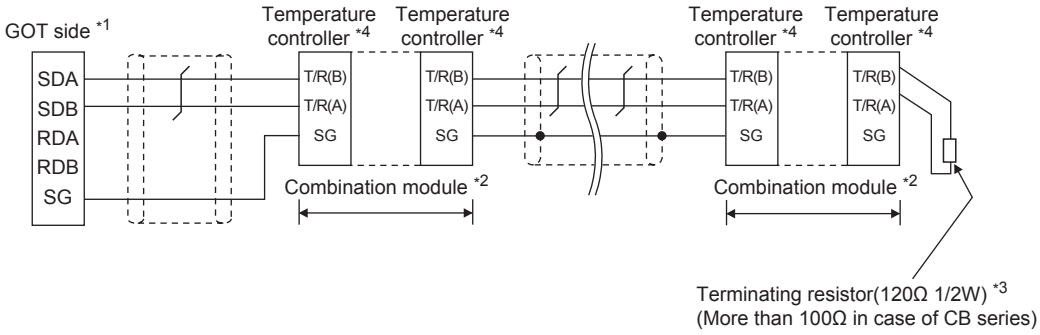

*1 Set the 2-wire/4-wire terminating resistor setting switch of the RS-232/485 signal conversion adapter as shown below.
2-wire/4-wire: 2-wire (1 pair)
Terminating resistor: 110Ω
☞ Page 67 Setting the RS-232/485 signal conversion adaptor

*2 When combining the module, because the communication line is connected between the modules with each other, wire only the communication terminal on the both end of the combination module.

*3 Terminating resistor should be provided for a temperature controller which will be a terminal. When using X-TIO, turn ON the terminating resistor selector in the terminal base. When combining the module, provide the terminating resistor to the end of the combination module (the one that is far from the converter).

*4 For the terminal number for connecting to FB series or RB series, refer to the table below.

Signal name	Terminal No.								
	Z-TIO/ Z-CT	CB100/ CB400/ CB500/ CB900	CB700	FB100		FB400/FB90		RB100/ RB400/ RB500/ RB900	RB700
				Communication 1	Communication 2	Communication 1	Communication 2		
SG	5	13	7	13	16	25	25	13	25
T/R(A)	3	14	8	14	17	26	28	14	26
T/R(B)	4	15	9	15	18	27	29	15	27

Signal name	Terminal No.									
	PF900 PF901 AG500	HA400/401 HA900/901		MA900/ MA901	RMC500	X-TIO	SA100	SA200	SB1	B400 (RS-485 specifications)
		Communication 1	Communication 2							
SG	25	13	25	44	13	17	1	10	1	3/6
T/R(A)	26	14	26	45	14	16	2	11	2	1/5
T/R(B)	27	15	27	46	15	15	3	12	3	2/4

Signal name	Terminal No.		
	FZ110	FZ400 FZ900 PZ400 PZ900 GZ400 GZ900	RZ100 RZ400
SG	16	34	13
T/R(A)	17	35	14
T/R(B)	18	36	15

■RS-485 connection diagram 13)

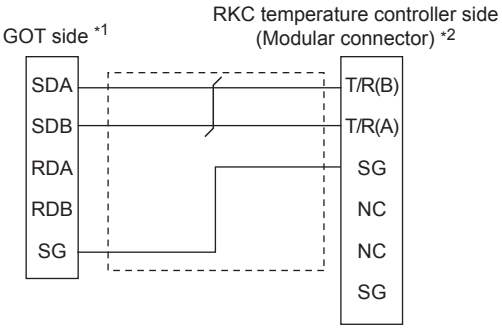

*1 Set the 2-wire/4-wire terminating resistor setting switch of the RS-232/485 signal conversion adapter as shown below.
2-wire/4-wire: 2-wire (1 pair)
Terminating resistor: 110Ω
☞ Page 67 Setting the RS-232/485 signal conversion adaptor

*2 For details of the pin assignment, refer to the following manual.
User's Manual of the RKC temperature controller

Precautions when preparing a cable

■Cable length

The length of the RS-485 cable must be 1200m or less.

■GOT side connector

For the GOT side connector, refer to the following.

☞ Page 58 GOT connector specifications

■RKC temperature controller side connector

Use the connector compatible with the RKC temperature controller side module.

For details, refer to user's manual of the RKC temperature controller.

Connecting terminating resistors

■GOT side

Set the terminating resistor by operating the terminating resistor setting switch.

For the procedure to set the terminating resistor, refer to the following.

☞ Page 62 Terminating resistors of GOT

10.4 GOT Side Settings

Setting the communication interface (Controller setting)

Set the channel of the connected equipment.

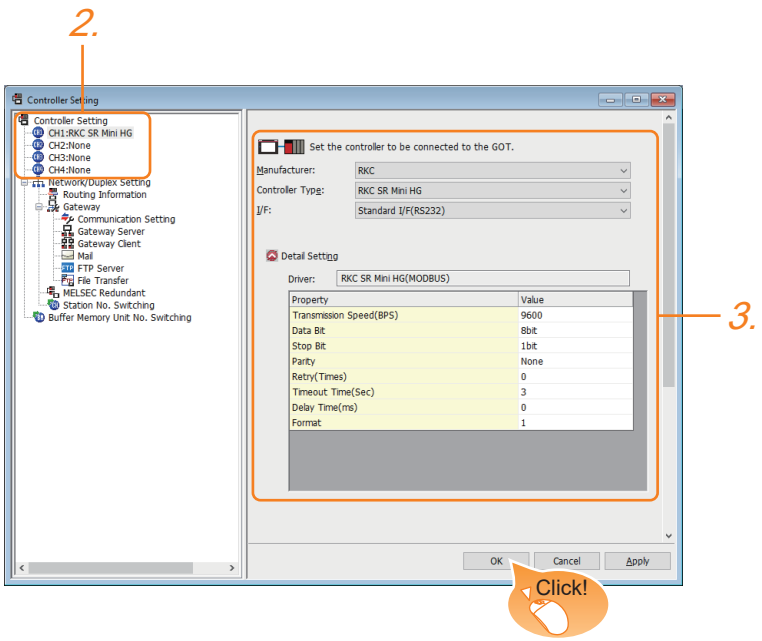

1. Select [Common] → [Controller Setting] from the menu.

2. In the [Controller Setting] window, select the channel No. to be used from the list menu.

3. Set the following items.

- [Manufacturer]: [RKC]
- [Controller Type]: [RKC SR Mini HG]
- [I/F]: Interface to be used
- [Detail Setting]: Configure the settings according to the usage environment.

☞ Page 383 Communication detail settings

4. When you have completed the settings, click the [OK] button.

Point

The settings of connecting equipment can be confirmed in [I/F Communication Setting].
For details, refer to the following.
☞ Page 48 I/F communication setting

Communication detail settings

Property	Value
Transmission Speed(BPS)	9600
Data Bit	8 bit
Stop Bit	1 bit
Parity	None
Retry(Times)	0
Timeout Time(Sec)	3
Delay Time(ms)	0
Format	1

Item	Description	Range
Transmission Speed	Set this item when change the transmission speed used for communication with the connected equipment. (Default: 9600bps)	9600bps 19200bps 38400bps 57600bps 115200bps
Data Bit	Set this item when change the data length used for communication with the connected equipment. (Default: 8bits)	7bits 8bits
Stop Bit	Set this item when change the data length used for communication with the connected equipment. (Default: 1bit)	1bit 2bits
Parity	Specify whether or not to perform a parity check, and how it is performed during communication. (Default: None)	None Even Odd
Retry	Set the number of retries to be performed when a communication error occurs. (Default: 0time)	0 to 5times
Timeout Time	Set the time period for a communication to time out. (Default: 3sec)	3 to 30sec
Delay Time	Set this item to adjust the transmission timing of the communication request from the GOT. (Default: 0ms)	0 to 300ms
Format	Select the communication format. (Default: 1) Format 1: Accessible to H-PCP-J, H-PCP-A, H-PCP-B, SRZ, FB, PF, HA, MA, RMC, SRX, B400AG, THV, FZ, RZ, PZ, GZ series Format 2: Accessible to CB series, RB, SA, SB1 series	1 2

Point

• Communication interface setting by the Utility

The communication interface setting can be changed on the Utility's [Communication setting] after writing [Communication Settings] of project data.

For details on the Utility, refer to the following manual.

GOT2000 Series User's Manual (Utility)

• Precedence in communication settings

When settings are made by GT Designer3 or the Utility, the latest setting is effective.

10.5 Temperature Controller Side Setting

Point

YOKOGAWA temperature controller

For details of RKC temperature controller, refer to the following manual.

User's Manual of the RKC temperature controller

Model name		Refer to
Temperature controller	H-PCP-J	☞ Page 384 Connecting to SR Mini HG series (HGH-PCP-J)
	H-PCP-A, H-PCP-B	☞ Page 387 Connecting to SR Mini HG series (H-PCP-A, H-PCP-B)
	Z-TIO module, Z-DIO module, Z-CT module	☞ Page 388 Connecting to Z-TIO, Z-DIO, Z-CT
	Z-COM module	☞ Page 390 Connecting to Z-COM module
	SRJ Series	☞ Page 392 Connecting to SRJ series
	CB Series	☞ Page 392 Connecting to CB series
	FB Series	☞ Page 393 Connecting to FB series
	RB Series	☞ Page 394 Connecting to RB series
	PF900/901	☞ Page 394 Connecting to PF series
	HA400/401, HA900/901	☞ Page 395 Connecting to HA series
	AG500	☞ Page 396 Connecting to AG series
	RMC500	☞ Page 396 Connecting to RMC series
	MA900, MA901	☞ Page 397 Connecting to MA series
	THV-A1	☞ Page 397 Connecting to THV series
	SA100 SA200	☞ Page 398 Connecting to SA series
	X-TIO module	☞ Page 398 Connecting to X-TIO Module
	SB1	☞ Page 400 Connecting to SB1 series
	B400	☞ Page 401 Connecting to B400 series
	FZ Series	☞ Page 403 Connecting to FZ series
	RZ Series	☞ Page 404 Connecting to RZ series
	PZ Series	☞ Page 405 Connecting to PZ series
	GZ Series	☞ Page 406 Connecting to GZ series

Connecting to SR Mini HG series (HGH-PCP-J)

Communication settings

Make the communication settings of the temperature controller.

Item	Setting range
Transmission speed*1	9600bps, 19200bps, 38400bps
Communication mode	MODBUS
Data bit	8bits
Parity bit	None
Stop bit*1	1bit
Unit address*2	0 to F

*1 Adjust the settings with GOT settings.

*2 Select the unit address without overlapping with that of other units.

Setting DIP switches

Make the settings of transmission speed, communication mode, data length, parity bit and stop bit.

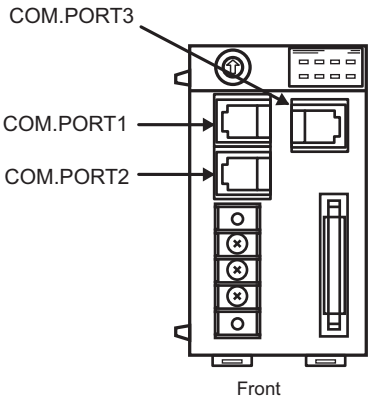

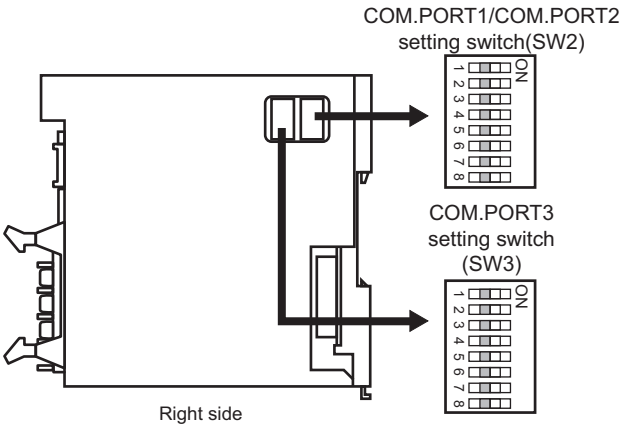

■Transmission speed settings

• COM.PORT1/COM.PORT2

SW2		Communication speed
3	4	
OFF	OFF	9600bps
ON	OFF	19200bps
OFF	ON	38400bps

• COM.PORT3

SW3		Communication speed
3	4	
OFF	OFF	9600bps
ON	OFF	19200bps
OFF	ON	38400bps

■Communication mode settings

• COM.PORT1/COM.PORT2

SW2				Communication protocol
5	6	7	8	
ON	OFF	OFF	OFF	MODBUS protocol

• COM.PORT3

SW3	Communication protocol
5	
ON	MODBUS protocol

■Settings of data length, parity bit, and stop bit

• COM.PORT1/COM.PORT2

SW2		Data bit configuration
1	2	
OFF	OFF	Data 8-bit, Non parity, Stop 1bit

• COM.PORT3

SW3		Data bit configuration
1	2	
OFF	OFF	Data 8-bit, Non parity, Stop 1bit

Unit address settings

Set the unit address using the unit address setting switch.

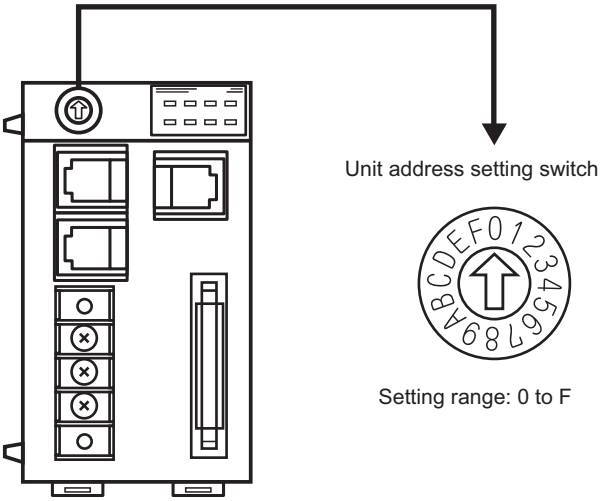

Connecting to SR Mini HG series (H-PCP-A, H-PCP-B)

Communication settings

Make the communication settings of the temperature controller.

Item	Setting range
Transmission speed*1	9600bps, 19200bps
Data bit	8bits
Parity bit	None
Unit address*2	0 to F

*1 Adjust the settings with GOT settings.
*2 Select the unit address without overlapping with that of other units.

Setting DIP switches

Make the settings of transmission speed, data length, parity bit, and stop bit.

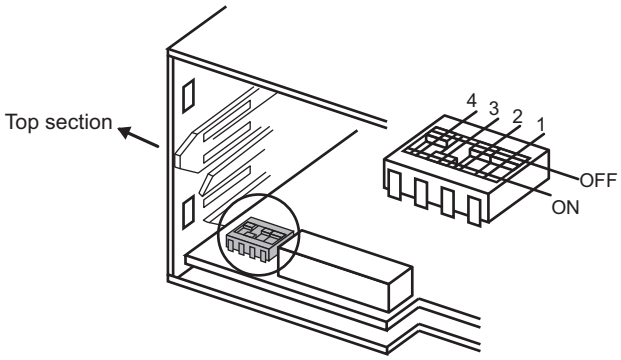

Rear view of module mainframe with mother block removed

■Transmission speed settings

3	4	Communication speed
OFF	ON	9600bps
ON	ON	19200bps

■Settings of data length and parity bit

1	2	Data bit configuration
OFF	OFF	Data 8-bit, Non parity

Unit address settings

Set the unit address using the unit address setting switch.

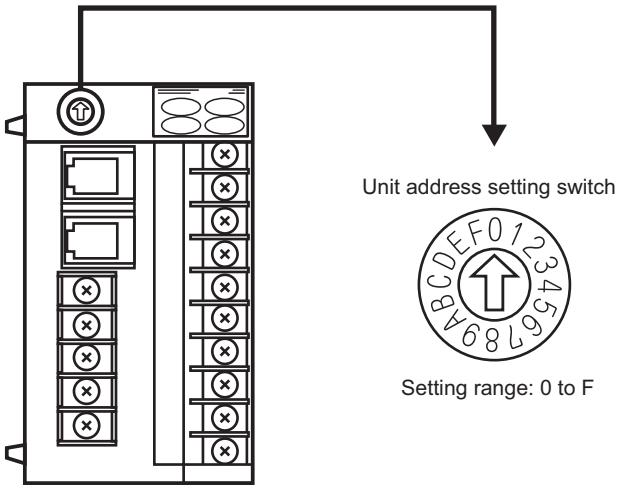

Setting range: 0 to F

Connecting to Z-TIO, Z-DIO, Z-CT

Communication settings

Make the communication settings of the temperature controller.

Item	Setting range
Communication speed*1	9600bps, 19200bps, 38400bps
Communication protocol	MODBUS
Data bit configuration	Data bit : 8bits, Parity : None
	Data bit : 8bits, Parity : Even
	Data bit : 8bits, Parity : Odd
	Stop bit : 1bit (fixed)
Unit address*2	0 to F
Interval time	0 to 250ms

*1 Adjust the settings with GOT settings.
*2 Select the module address without overlapping with that of other units.

Setting DIP switches

Make the settings of transmission speed, data bit configuration, communication protocol

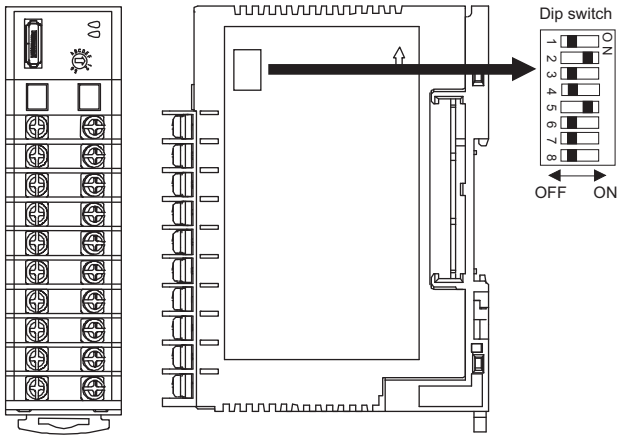

Front side Right side

Setting item	Set value	Switch position					
		1	2	3	4	5	6
Communication speed	9600bps	ON	OFF				
	19200bps	OFF	ON				
	38400bps	ON	ON				
Data bit configuration	Data bit: 8bits, Parity: None			OFF	OFF	ON	
	Data bit: 8bits, Parity: Even			OFF	ON	ON	
	Data bit: 8bits, Parity: Odd			ON	ON	ON	
Communication protocol	MODBUS						ON

Unit address settings

Set the unit address using the unit address setting switch.

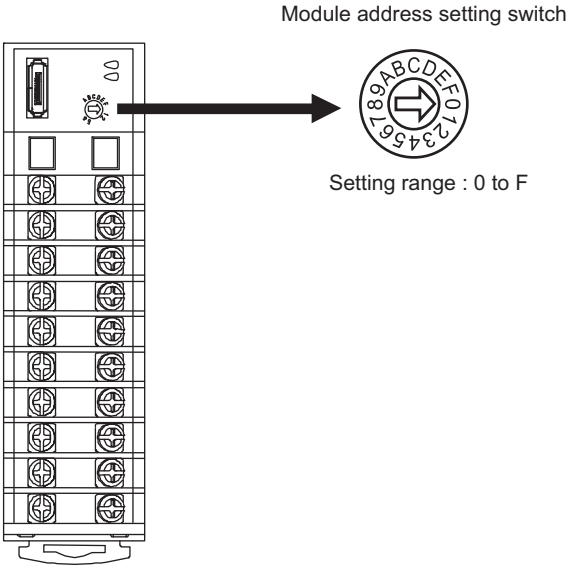

Interval time settings

Configure the interval time setting using the RKC communication setting tool (WinPCI).

After the communication is started, set as follows.

Setting item	Set value
Instrument	0
CFG file	ZTIO_rkc.cfg
Interval time	0 to 250ms

For the using method of RKC communication setting tool, refer to the following.

☞ RKC communication setting tool user's manual

Connecting to Z-COM module

Communication settings

Item	Setting range
Communication speed*1	9600bps, 19200bps, 38400bps
Communication protocol	Host (MODBUS)
Data bit	8bits (fixed)
Parity	None (fixed)
Stop bit	1bit (fixed)
Unit address*2	0 to F
Interval time	0 to 250ms
Dip switch settings valid / invalid	valid

*1 Adjust the settings with GOT settings.
*2 Select the unit address without overlapping with that of other units.

Setting DIP switches

Make the settings of transmission speed, data bit configuration, communication protocol.

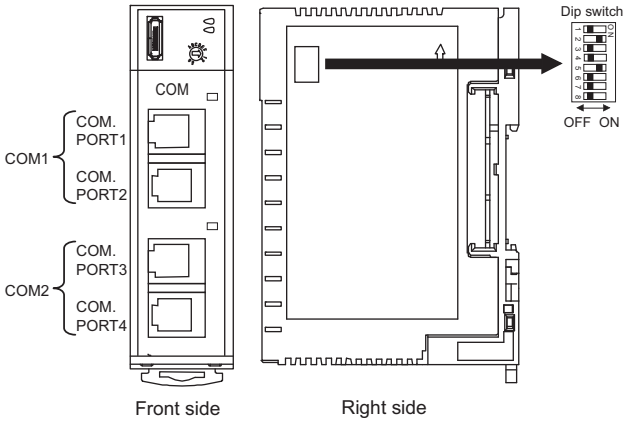

Setting item	Set value	Switch position							
		1	2	3	4	5	6	7	8
Communication speed (COM1)	9600bps	ON	OFF						
	19200bps	OFF	ON						
	38400bps	ON	ON						
Communication protocol (COM1)	Host (MODBUS)			ON					
Communication speed (COM2)	9600bps				OFF				
	19200bps				ON				
Communication protocol (COM2)	Host (MODBUS)					ON	OFF	OFF	
Dip switch settings valid / invalid	valid								OFF

Unit address settings

Set the unit address using the unit address setting switch.

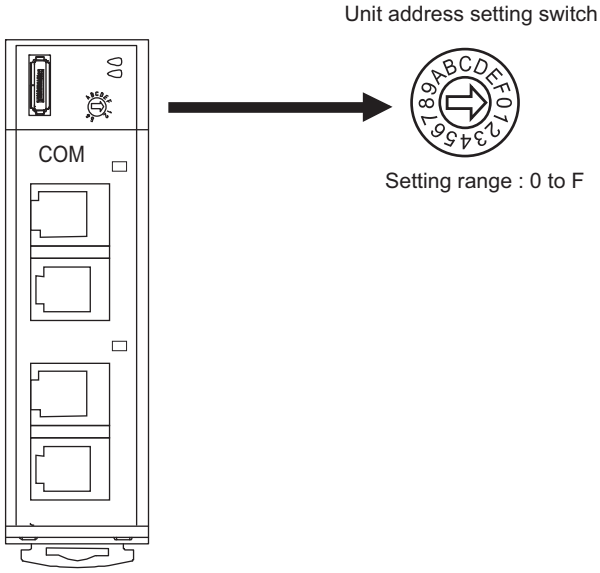

Interval time settings

Configure the interval time setting using the RKC communication setting tool (WinPCI).

After the communication is started, set as follows.

Setting item	Set value
Instrument	0
CFG file	ZCOM_rkc.cfg
Communication 1 interval time	0 to 250ms
Communication 2 interval time	

For the using method of RKC communication setting tool, refer to the following.

☞ RKC communication setting tool user's manual

Connecting to SRJ series

Communication settings

Communication settings are set with a RKC peripheral tool "PROTEM 2".

Item	Setting range	Set value
Communication protocol	0: RKC communication 1: MODBUS	1: MODBUS
Communication speed	0: 19200bps1: 38400bps	Adjust the settings with GOT settings.
Interval time	0 to 100ms	Set this as necessary.

Rotary switch setting

Set the device address using the rotary switch for address setting.

Rotary switch for address setting

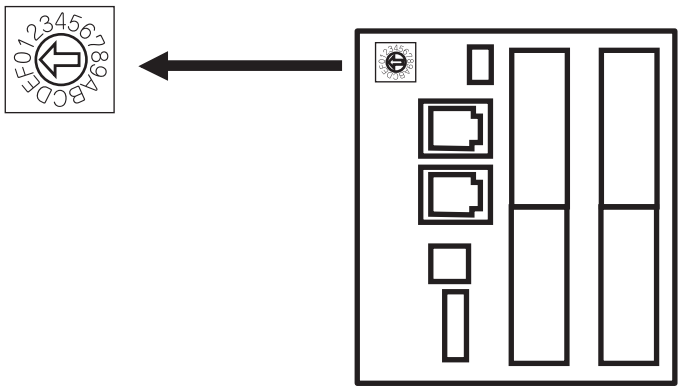

For address setting of master device and slave device, set as follows.

Address of master device	Address range of slave device*1
0	1 to 3
4	5 to 7
8	9 to B
C	D to F

*1 J-TI-A/B is available to connect three slave devices for one master device.

Connecting to CB series

Communication settings

Item	Setting range
Device address*1	1 to 99
Communication speed*2	2: 9600bps 3: 19200bps
Data bit configuration	0: 8/1/None 6: 8/1/Even 7: 8/1/Odd
Interval time	0 to 150

*1 When the setting value is set to 0, a communication is not made.
*2 Adjust the settings with GOT settings.

Communication setting mode

Set the communication setting mode using the operation panel of the CB series main unit.

For details of the communication setting mode, refer to the following.

CB series "Communication Instruction Manual"

Connecting to FB series

Communication settings

Item	Setting range
Communication protocol	1: MODBUS
Device address (Slave address)*1	1 to 99
Communication speed*2	96: 9600bps 19.2: 19200bps 38.4: 38400bps
Data bit configuration	☞ Page 393 Data bit configuration
Interval time	0 to 250

*1 When the setting value is set to 0, a communication is not made.
*2 Adjust the settings with GOT settings.

Data bit configuration

Set value	Data bit	Parity bit	Stop bit
8n1	8	None	1
8n2	8	None	2
8E1	8	Even	1
8E2	8	Even	2
8o1	8	Odd	1
8o2	8	Odd	2

Communication setting mode

Set the communication setting mode using the operation panel of the FB series main unit.
For details of the communication setting mode, refer to the following.
📖FB series "Communication Instruction Manual"

Connecting to RB series

Communication settings

Item	Setting range
Communication protocol	1: MODBUS
Device address (Slave address)*1	1 to 99
Communication speed*2	2: 9600bps 3: 19200bps
Data bit configuration	☞ Page 394 Data bit configuration
Interval time	0 to 250

*1 When the setting value is set to 0, a communication is not made.
*2 Adjust the settings with GOT settings.

Data bit configuration

Set value	Data bit	Parity bit	Stop bit
0	8	None	1
1	8	None	2
2	8	Even	1
3	8	Even	2
4	8	Odd	1
5	8	Odd	2

Communication setting mode

Set the communication setting mode using the operation panel of the RB series main unit.
For details of the communication setting mode, refer to the following.
☞ RB series "Communication Instruction Manual"

Connecting to PF series

Communication settings

Make the communication settings by operating the key of the temperature controller.

Item	Setting range
Communication speed 1*1	9600bps, 19200bps, 38400bps, 57600bps
Communication protocol 1	MODBUS
Data bit configuration 1*1 (Data bit, Parity bit, Stop bit)	[8N1]: 8bit, None, 1bit [8N2]: 8bit, None, 2bit [8E1]: 8bit, Even, 1bit [8E2]: 8bit, Even, 2bit [8O1]: 8bit, Odd, 1bit [8O2]: 8bit, Odd, 2bit
Device address 1*2(Slave address 1)	1 to 99*4
Interval time*3	0 to 250 (ms)

*1 Adjust the settings with GOT settings.
*2 Select the device address1 without overlapping with that of other units.
*3 Set the maximum time from the sending of the last character stop bit from the GOT side until the switching of the GOT side to the receiving status (until the temperature controller becomes ready to send). Set as necessary.
*4 When the setting value is set to 0, a communication is not made.

Communication settings

Make the communication settings by operating the key of the temperature controller.

(Communication 1)

Item	Setting range
Communication speed 1*1	9600bps, 19200bps, 38400bps
Data bit configuration 1*1 (Data bit, Parity bit, Stop bit)	[8N1]: 8bit, None, 1bit [8N2]: 8bit, None, 2bit [8E1]: 8bit, Even, 1bit [8E2]: 8bit, Even, 2bit [8O1]: 8bit, Odd, 1bit [8O2]: 8bit, Odd, 2bit
Device address 1*2(Slave address 1)	1 to 99*4
Interval time*3	0 to 250 (ms)

(Communication 2)

Item	Setting range
Communication speed 2*1	9600bps, 19200bps, 38400bps
Data bit configuration 2*1 (Data bit, Parity bit, Stop bit)	[8N1]: 8bit, None, 1bit [8N2]: 8bit, None, 2bit [8E1]: 8bit, Even, 1bit [8E2]: 8bit, Even, 2bit [8O1]: 8bit, Odd, 1bit [8O2]: 8bit, Odd, 2bit
Device address 2*2(Slave address 2)	1 to 99*4
Interval time*3	0 to 250 (ms)

*1 Adjust the settings with GOT settings.

*2 Select the device address1/2 without overlapping with that of other units.

*3 Set the maximum time from the sending of the last character stop bit from the GOT side until the switching of the GOT side to the receiving status (until the temperature controller becomes ready to send). Set as necessary.

*4 When the setting value is set to 0, a communication is not made.

Connecting to AG series

Communication settings

Make the communication settings by operating the key of the temperature controller.

Item	Setting range
Communication speed*1	9600bps, 19200bps, 38400bps
Communication protocol	MODBUS
Data bit configuration*1 (Data bit, Parity bit, Stop bit)	[8N1]: 8bit, None, 1bit [8N2]: 8bit, None, 2bit [8E1]: 8bit, Even, 1bit [8E2]: 8bit, Even, 2bit [8O1]: 8bit, Odd, 1bit [8O2]: 8bit, Odd, 2bit
Device address*2(Slave address)	1 to 99*4
Interval time*3	0 to 250 (ms)

*1 Adjust the settings with GOT settings.
*2 Select the device address1 without overlapping with that of other units.
*3 Set the maximum time from the sending of the last character stop bit from the GOT side until the switching of the GOT side to the receiving status (until the temperature controller becomes ready to send). Set as necessary.
*4 When the setting value is set to 0, a communication is not made.

Connecting to RMC series

Communication settings

Make the communication settings by operating the key of the temperature controller.

Item	Setting range
Communication speed*1	9600bps, 19200bps, 38400bps
Communication protocol	MODBUS
MODBUS data*2 Extension time	0 to 255 (ms)
Data bit configuration*1 (Data bit, Parity bit, Stop bit)	[8N1]: 8bit, None, 1bit [8N2]: 8bit, None, 2bit [8E1]: 8bit, Even, 1bit [8E2]: 8bit, Even, 2bit [8O1]: 8bit, Odd, 1bit [8O2]: 8bit, Odd, 2bit
Device address*3(Slave address)	1 to 99*4
Interval time*5	0 to 250 (ms)

*1 Adjust the settings with GOT settings.
*2 Set the extension time for the data interval time in the MODBUS communication (which is lower than 24 bit time). Set when the data time interval exceeds 24 bit time.
*3 Select the device address without overlapping with that of other units.
*4 When the setting value is set to 0, a communication is not made.
*5 Set the maximum time from the sending of the last character stop bit from the GOT side until the switching of the GOT side to the receiving status (until the temperature controller becomes ready to send). Set as necessary.

Connecting to MA series

Communication settings

Make the communication settings by operating the key of the temperature controller.

Item	Setting range
Communication speed*1	9600bps, 19200bps
Data bit configuration*1 (Data bit, Parity bit, Stop bit)	[8N1]: 8bit, None, 1bit [8N2]: 8bit, None, 2bit [8E1]: 8bit, Even, 1bit [8E2]: 8bit, Even, 2bit [8O1]: 8bit, Odd, 1bit [8O2]: 8bit, Odd, 2bit
Device address*2(Slave address)	1 to 99*4
Interval time*3	0 to 250 (ms)

*1 Adjust the settings with GOT settings.
*2 Select the device address1 without overlapping with that of other units.
*3 Set the maximum time from the sending of the last character stop bit from the GOT side until the switching of the GOT side to the receiving status (until the temperature controller becomes ready to send). Set as necessary.
*4 When the setting value is set to 0, a communication is not made.

Connecting to THV series

Communication settings

Make the communication settings by operating the key of the temperature controller.

Item	Setting range
Communication speed*1	9600bps (fixed)
Data bit configuration*1	Data bit: 8bit (fixed) Parity bit: None (fixed) Stop bit: 1bit (fixed)
Device address*2(Slave address)	1 to 99*4
Interval time*3	0 to 250 (ms)

*1 Adjust the settings of the GOT side with the temperature controller settings.
*2 Select the device address1 without overlapping with that of other units.
*3 Set the maximum time from the sending of the last character stop bit from the GOT side until the switching of the GOT side to the receiving status (until the temperature controller becomes ready to send). Set as necessary.
*4 When the setting value is set to 0, a communication is not made.

Connecting to SA series

Communication settings

Make the communication settings by operating the key of the temperature controller.

Item	Setting range
Communication speed*1	9600bps, 19200bps
Data bit configuration*1 (Data bit, Parity bit, Stop bit)	[8N1]: 8bit, None, 1bit [8N2]: 8bit, None, 2bit [8E1]: 8bit, Even, 1bit [8E2]: 8bit, Even, 2bit [8O1]: 8bit, Odd, 1bit [8O2]: 8bit, Odd, 2bit
Device address*2 (Slave address)	1 to 99*4
Interval time*3	0 to 250 (ms)

*1 Adjust the settings with GOT settings.
*2 Select the device address1 without overlapping with that of other units.
*3 Set the maximum time from the sending of the last character stop bit from the GOT side until the switching of the GOT side to the receiving status (until the temperature controller becomes ready to send). Set as necessary.
*4 When the setting value is set to 0, a communication is not made.

Connecting to X-TIO Module

Communication settings

Make the communication settings of the temperature controller.

Item	Setting range
Communication speed*1	9600bps, 19200bps, 38400bps
Communication protocol	MODBUS
Data bit configuration	Data bit: 8bit, Parity: None
	Data bit: 8bit, Parity: Even
	Data bit: 8bit, Parity: Odd
	Stop bit: 1bit (fixed)
Module address*2	1 to 99
Internal data bus terminating resistor	When combining the module, turn ON the internal data bus terminating resistor at both ends of the module.
Data interval extension time	0 to 99ms

*1 Adjust the settings with GOT settings.
*2 When the setting value is set to 0, a communication is not made.

Setting DIP switches

Make the settings of transmission speed, data bit configuration, communication protocol.

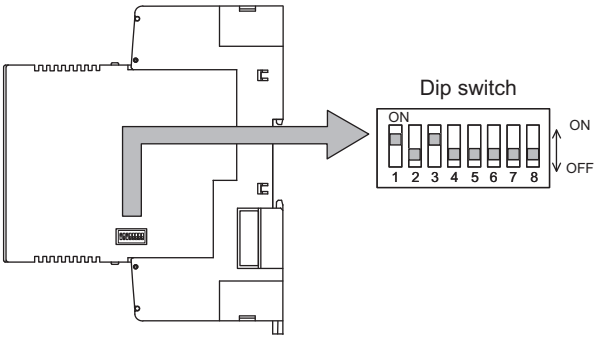

Setting item	Set value	Switch position							
		1	2	3	4	5	6	7	8
Communication speed	9600bps	ON	OFF						
	19200bps	OFF	ON						
	38400bps	ON	ON						
Data bit configuration	Data bit: 8bit, Parity: None			ON	OFF	OFF			
	Data bit: 8bit, Parity: Even			ON	OFF	ON			
	Data bit: 8bit, Parity: Odd			ON	ON	ON			
Communication protocol	MODBUS						ON		
Internal data bus termination resistor setting	OFF								OFF
	ON								ON
Data interval extension time	0 to 99ms				ON	OFF	ON		

Module address settings

Set the unit address using the rotary switch (address setting switch).

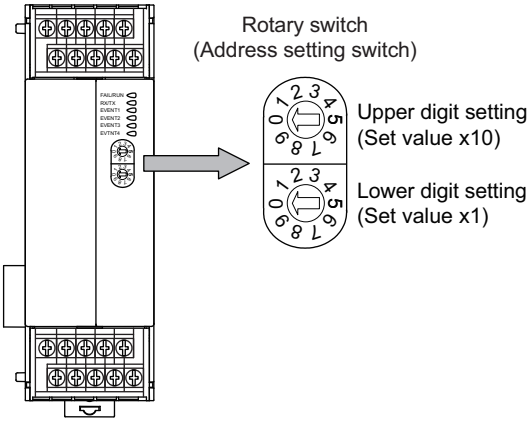

Point

The rotary switch (address setting switch) is also used for the data interval extension time setting.
The setting method is the same as that of the module address.
For the data interval extension time, refer to the following.
☞ Page 400 Data interval extension time settings

Data interval extension time settings

Set the data interval extension time as the following procedure.

1. Turn the power of the module OFF.
2. Set the DIP switch 4 and 6 to ON and 5 to OFF.
3. Set the data interval extension time using the rotary switch (address setting switch).

For the setting method, refer to the following.

☞ Page 399 Module address settings

4. Turn the power of the module ON.

The FAIL/RUN lamp lights in green and the set time becomes valid.

5. Turn the power of the module OFF again and set the DIP switches and rotary switch to the original position.

Connecting to SB1 series

Communication settings

Make the communication settings of SB1 using the switch key on the front surface.

For the operation procedure, refer to the SB1 manual.

Item	Setting range
Communication protocol*2	0: RKC communication 1: MODBUS
Device address*1*3 (Slave address)	0 to 99
Communication speed*1*4	0: 2400bps 1: 4800bps 2: 9600bps 3: 19200bps
Data bit configuration*1*5	0 to 5
Interval time*6	0 to 250ms

*1 Adjust the settings with GOT settings.
*2 Select 1: MODBUS.
*3 When the setting value is 0, communication is not performed.
*4 The communication speed cannot be set to 2400bps or 4800bps on the GOT side. Select 2 or 3.
*5 For details on the data bit configuration, refer to the following.

Set value	Data bit	Parity bit	Stop bit
0	8	None	1
1	8	None	2
2	8	Even	1
3	8	Even	2
4	8	Odd	1
5	8	Odd	2

*6 Set the maximum time from when the last character stop bit is sent from the GOT side until the transmission cable becomes ready to receive.

Connecting to B400 series

Communication settings

Make the communication settings of B400 using the rotary switch key and the DIP switch.

For the operation procedure, refer to the B400 manual.

Item	Setting range	Settings
Unit address setting (CH1 to CH8)	0 to 99*1	☞ Page 401 Rotary switch setting (SW1, SW2)
Communication speed	4800bps, 9600bps, 19200bps, 38400bps	☞ Page 402 DIP switch setting (SW3)
Data bit configuration	0 to 5	
Communication specification setting	RS-422A, RS-485	☞ Page 402 DIP switch settings (SW4)
Termination resistor setting	Enable, Disable	

*1 When the setting value is 98 or 99, the communication address is the same as for 97.

■Rotary switch setting (SW1, SW2)

Set the unit address using the rotary switch.

Rotary switch
(Address setting switch)

SW1: Lower digit setting
(Set value x1)

SW2: Upper digit setting
(Set value x10)

Item	Setting range
Unit address setting (CH1 to CH4)	The communication address is the rotary switch setting value + 1.
Unit address setting (CH5 to CH8)	The communication address is the rotary switch setting value + 2.

■DIP switch setting (SW3)

Set the communication speed and the data bit configuration using the DIP switch (SW3).

Dip switch(SW3)

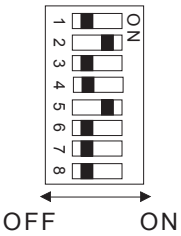

Setting item	Set value	Switch position							
		1	2	3	4	5	6	7	8
Communication speed	4800bps	OFF	OFF	-					
	9600bps	ON	OFF						
	19200bps	OFF	ON						
	38400bps	ON	ON						
Data bit configuration	Data bit: 8 bits, Parity: None, Stop: 2 bits	-		OFF	OFF	-			
	Data bit: 8 bits, Parity: None, Stop: 1 bit	-		ON	OFF	-			
	Data bit: 8 bits, Parity: Even, Stop: 1 bit	-		OFF	ON	-			
	Data bit: 8 bits, Parity: Odd, Stop: 1 bit	-		ON	ON	-			

■DIP switch settings (SW4)

Set the communication specifications and the termination resistor using the DIP switch (SW4).

Dip switch(SW4)

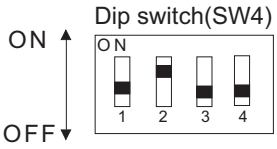

Setting item	Set value	Switch position			
		1	2	3	4
Communication specification setting	RS-422A	OFF	OFF	-	
	RS485	ON	ON	-	
Termination resistor setting	Enable	-			ON
	Disable	-			OFF

Connecting to FZ series

Communication settings

Item	Setting range
Communication protocol	1: MODBUS (Data transfer order: Higher→Lower)
Device address (Slave address)*1	1 to 99
Communication speed*2	0:2400bps 1:4800bps 2:9600bps 3:19200bps 4:38400bps 5:57600bps
Data bit configuration	☞ Page 403 Data bit configuration
Interval time	0 to 250

*1 When the setting value is set to 0, a communication is not made.
*2 Adjust the settings with GOT settings.

Data bit configuration

Set value	Data bit	Parity bit	Stop bit
0	8	None	1
1	8	None	2
2	8	Even	1
3	8	Even	2
4	8	Odd	1
5	8	Odd	2

Communication setting mode

Set the communication setting mode using the operation panel of the FZ series main unit.

For details of the communication setting mode, refer to the following.

📖FZ Series User's Manual

Connecting to RZ series

Communication settings

Item	Setting range
Communication protocol	1: MODBUS
Device address (Slave address)*1	1 to 99
Communication speed*2	0:2400bps 1:4800bps 2:9600bps 3:19200bps 4:38400bps
Data bit configuration	☞ Page 404 Data bit configuration
Interval time	0 to 150

*1 When the setting value is set to 0, a communication is not made.
*2 Adjust the settings with GOT settings.

Data bit configuration

Set value	Data bit	Parity bit	Stop bit
0	8	None	1
1	8	None	2
6	8	Even	1
7	8	Odd	1
8	8	Even	2
9	8	Odd	2

Communication setting mode

Set the communication setting mode using the operation panel of the RZ series main unit.
For details of the communication setting mode, refer to the following.
☞ RZ Series User's Manual

Connecting to PZ series

Communication settings

Item	Setting range
Communication protocol	1: MODBUS (Data transfer order: Higher→Lower)
Device address (Slave address) *1	1 to 99
Communication speed *2	0:2400bps 1:4800bps 2:9600bps 3:19200bps 4:38400bps 5:57600bps
Data bit configuration	0 to 5 For details on the setting value, refer to the following. ☞ Page 405 Data bit configuration
Interval time	0 to 250ms

*1 When the setting value is set to 0, a communication is not made.

*2 Adjust the settings with GOT settings.

Data bit configuration

Set value	Data bit	Parity bit	Stop bit
0	8	None	1
1	8	None	2
2	8	Even	1
3	8	Even	2
4	8	Odd	1
5	8	Odd	2

Communication setting mode

Set the communication setting mode using the operation panel of the PZ series main unit.

For details of the communication setting mode, refer to the following.

📖PZ Series User's Manual

Connecting to GZ series

Communication settings

Item	Setting range
Communication protocol	1: MODBUS (Data transfer order: Higher→Lower)
Device address (Slave address) *1	1 to 99
Communication speed *2	0:2400bps 1:4800bps 2:9600bps 3:19200bps 4:38400bps 5:57600bps 6:115200bps
Data bit configuration	0 to 5 For details on the setting value, refer to the following. ☞ Page 406 Data bit configuration
Interval time	0 to 250ms

*1 When the setting value is set to 0, a communication is not made.
*2 Adjust the settings with GOT settings.

Data bit configuration

Set value	Data bit	Parity bit	Stop bit
0	8	None	1
1	8	None	2
2	8	Even	1
3	8	Even	2
4	8	Odd	1
5	8	Odd	2

Communication setting mode

Set the communication setting mode using the operation panel of the GZ series main unit.

For details of the communication setting mode, refer to the following.

📖GZ Series User's Manual

Station number setting

Set each station number so that no station number overlaps.

The station number can be set without regard to the cable connection order. There is no problem even if station numbers are not consecutive.

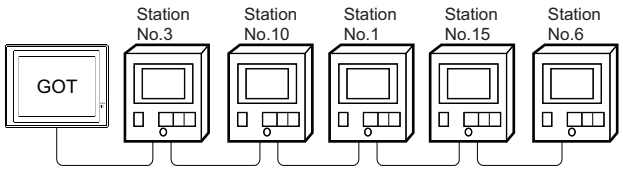

Examples of station number setting

Direct specification

The station number setting range of the temperature controller side differs from that of the GOT side.

Specify the station No. of the temperature controller to be changed when setting devices referring the following table.

Temperature controller	Module address setting of temperature controller side	GOT side station number setting	Remark
H-PCP-J H-PCP-A H-PCP-B Z-TIO Z-COM	0 to F (Hexadecimal)	1 to 16 (Decimal)	The GOT side station number setting is the module address setting value +1.
Z-DIO	0 to F (Hexadecimal)	17 to 32 (Decimal)	The GOT side station number setting is the module address setting value +17.
Z-CT	0 to F (Hexadecimal)	33 to 48 (Decimal)	The GOT side station number setting is the module address setting value +33.
X-TIO	1 to 99 (Decimal)	2 to 100 (Decimal)	The GOT side station number setting is the module address setting value +1.
CB, FB, RB, PF, AG, HA, MA, RMC, THV, SA, SB1	1 to 99 (Decimal)	1 to 99 (Decimal)	The GOT side station number setting is the same as the module address setting value.
B400	1 to 99 (Decimal)	1 to 99 (Decimal)	The GOT side station number is the module address setting value +1 or +2.

Indirect specification

When setting the device, indirectly specify the station number of the temperature controller of which data is to be changed using the 16-bit GOT internal data register (GD10 to GD25).
When specifying the station No. from 100 to 115 on GT Designer3, the value of GD10 to GD25 compatible to the station No. specification will be the station No. of the temperature controller.

Specification station NO.	Compatible device	Setting range
100	GD10	1 to 99 For the setting other than the above, error (dedicated device is out of range) will occur.
101	GD11	
102	GD12	
103	GD13	
104	GD14	
105	GD15	
106	GD16	
107	GD17	
108	GD18	
109	GD19	
110	GD20	
111	GD21	
112	GD22	
113	GD23	
114	GD24	
115	GD25	

10.6 Settable Device Range

For the device setting dialog and range of devices usable in the GOT, refer to the following.
☞ Page 609 RKC equipment ([RKC SR Mini HG])

10.7 Precautions

Station number setting of the temperature controller system

Make sure to establish temperature controller system with No.01 station.

GOT clock control

Since the temperature controller does not have a clock function, the settings of "time adjusting" or "time broad cast" by GOT clock control will be disabled.

Disconnecting some of multiple connected equipment

By setting GOT internal device, GOT can cut the portion of multiple connection of the controller. For example, faulty station that has communication timeout can be cut from the system.
For details of GOT internal device setting, refer to the following manual.
📖GT Designer3 (GOT2000) Screen Design Manual

Precautions for using 32-bit data

The storage order of 32-bit data of the RKC temperature controller is from lower-order bits by default.
Configure the following settings according to the temperature controller to be used.

■FZ, PZ and GZ series

Set the communication protocol from the higher-order bit to the lower-order bit on the temperature controller side.
For the details, refer to the following.
☞ Page 403 Connecting to FZ series
☞ Page 405 Connecting to PZ series
☞ Page 406 Connecting to GZ series

■Other than FZ, PZ and GZ series

Use [MODBUS/RTU Master] for the communication driver.
Configure the following settings in the [Controller Setting] window in GT Designer3.

- [Manufacturer]: [MODBUS]
- [Controller Type]: [MODBUS Slave(GOT:Master)]
- [Detail Setting]: [LH Order] for [32bit Order]

For details on the MODBUS/RTU master connection, refer to the following manual.
📖GOT2000 Series Connection Manual (Microcomputers, MODBUS/Fieldbus Products, Peripherals) For GT Works3 Version1

MEMO

11 ALLEN-BRADLEY PLC

- Page 411 Connectable Model List
- Page 414 Serial Connection
- Page 429 Ethernet Connection
- Page 442 Settable Device Range

11.1 Connectable Model List

The following table shows the connectable models.

Series	Model name	Clock	Communication Type	Connectable model	Refer to
SLC500	SLC500-20	×	RS-232	GT27 GT25 GT23	☞ Page 414 Connecting to SLC500 series
	SLC500-30				
	SLC500-40				
	SLC5/01				
	SLC5/02				
	SLC5/03	○	RS-232	GT27 GT25 GT23 GT21 GS	
	SLC5/04				
	SLC5/05				
MicroLogix1000 (Digital CPU)	1761-L10BWA	×	RS-232	GT27 GT25 GT23 GT21 GS	☞ Page 416 Connecting to MicroLogix series
	1761-L10BWB				
	1761-L16AWA				
	1761-L16BWA				
	1761-L16BWB				
	1761-L16BBB				
	1761-L32AWA				
	1761-L32BWA				
	1761-L32BWB				
	1761-L32BBB				
	1761-L32AAA				
MicroLogix1000 (Analog CPU)	1761-L20AWA-5A	×	RS-232	GT27 GT25 GT23 GT21 GS	
	1761-L20BWA-5A				
	1761-L20BWB-5A				
MicroLogix1100	1763-L16BWA	×	RS-232	GT27 GT25 GT23 GT21 GS	
MicroLogix1200	1762-L24BWA	×	RS-232	GT27 GT25 GT23 GT21 GS	
MicroLogix1400	1766-L32AWA	×	RS-232	GT27 GT25 GT23 GT21 GS	
MicroLogix1500	1764-LSP	×	RS-232	GT27 GT25 GT23 GT21 GS	
	1764-LRP				

Series	Model name	Clock	Communication Type	Connectable model	Refer to
ControlLogix	1756-L	×	RS-232	GT27 GT25 GT23	☞ Page 419 Connecting to ControlLogix, CompactLogix, or FlexLogix series
	1756-L1M1				
	1756-L1M2				
	1756-L1M3				
	1756-L61				
	1756-L62				
	1756-L63				
	1756-L64				
	1756-L55M12				
	1756-L55M13				
	1756-L55M14				
	1756-L55M16				
	1756-L55M22				
	1756-L55M23				
	1756-L55M24				
CompactLogix	1769-L31	×	RS-232	GT27 GT25 GT23	☞ Page 419 Connecting to ControlLogix, CompactLogix, or FlexLogix series
	1769-L32C				
	1769-L35CR				
FlexLogix	1794-L33	×	RS-232	GT27 GT25 GT23	☞ Page 419 Connecting to ControlLogix, CompactLogix, or FlexLogix series
	1794-L34				
MicroLogix1000 (Digital CPU)	1761-L10BWA	×	Ethernet	GT27 GT25 GT23	☞ Page 429 Ethernet connection type: Connecting to Ethernet (AB MicroLogix)
	1761-L10BWB				
	1761-L16AWA				
	1761-L16BWA				
	1761-L16BWB				
	1761-L16BBB				
	1761-L32AWA				
	1761-L32BWA				
	1761-L32BWB				
	1761-L32BBB				
	1761-L32AAA				
MicroLogix1000 (Analog CPU)	1761-L20AWA-5A	×	Ethernet	GT27 GT25 GT23	
	1761-L20BWA-5A				
	1761-L20BWB-5A				
MicroLogix1100	1763-L16BWA	×	Ethernet	GT27 GT25 GT23	
MicroLogix1200	1762-L24BWA	×	Ethernet	GT27 GT25 GT23	
MicroLogix1400	1766-L32AWA	×	Ethernet	GT27 GT25 GT23	
MicroLogix1500	1764-LSP	×	Ethernet	GT27 GT25 GT23	
	1764-LRP				

Series	Model name	Clock	Communication Type	Connectable model	Refer to
ControlLogix	1756-L	×	Ethernet	GT27 GT25 GT23 GT21 GS	☞ Page 430 Ethernet connection type: Connecting to Ethernet (AB) ☞ Page 432 Ethernet connection type: Connecting to Ethernet (AB Tag)
	1756-L1M1				
	1756-L1M2				
	1756-L1M3				
	1756-L61				
	1756-L62				
	1756-L63				
	1756-L64				
	1756-L55M12				
	1756-L55M13				
	1756-L55M14				
	1756-L55M16				
	1756-L55M22				
	1756-L55M23				
	1756-L55M24				
ControlLogix	1756-L72S	×	Ethernet	GT27 GT25 GT23 GT21 GS	☞ Page 430 Ethernet connection type: Connecting to Ethernet (AB) ☞ Page 432 Ethernet connection type: Connecting to Ethernet (AB Tag)
	1756-L71				
	1756-L72				
	1756-L73				
	1756-L74				
	1756-L75				
	1756-L81E				
	1756-L82E				
	1756-L83E				
	1756-L84E				
	1756-L85E				
CompactLogix	1769-L31 *1	×	Ethernet	GT27 GT25 GT23 GT21 GS	☞ Page 430 Ethernet connection type: Connecting to Ethernet (AB) ☞ Page 432 Ethernet connection type: Connecting to Ethernet (AB Tag)
	1769-L32C *1				
	1769-L35CR *1				
	1769-L32E	×	Ethernet	GT27 GT25 GT23 GT21 GS	☞ Page 430 Ethernet connection type: Connecting to Ethernet (AB) ☞ Page 432 Ethernet connection type: Connecting to Ethernet (AB Tag)
	1769-L35E				
FlexLogix	1794-L33 *2	×	Ethernet	GT27 GT25 GT23	☞ Page 432 Ethernet connection type: Connecting to Ethernet (AB Tag)
	1794-L34 *2				

*1 1769-L31, 1769-L32C, and 1769-L35CR do not support Ethernet connection type: Ethernet (AB Tag).

*2 1794-L33 and 1794-L34 do not support Ethernet connection type: Ethernet (AB).

11.2 Serial Connection

Connecting to SLC500 series

When connecting to one PLC

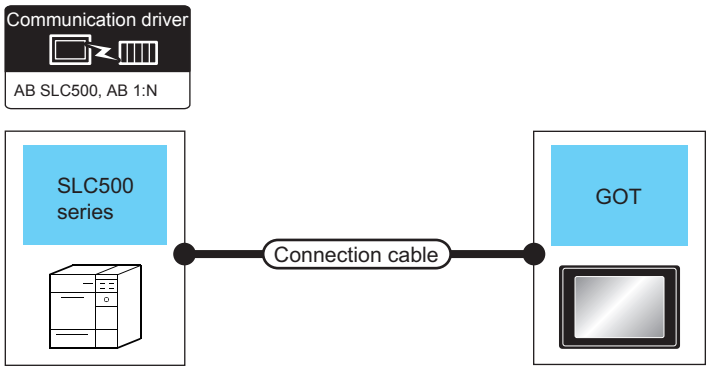

PLC		Connection cable		GOT		Number of connectable equipment
Series	Communication Type	Cable model Connection diagram number	Max. distance	Option device*2	Model	
SLC500	RS-232	GT09-C30R20701-9S(3m) or User preparing RS232 connection diagram 1)	15m	- (Built into GOT)	GT27 GT25 GT23 GT21(07W) GT21(05Q) GS	1 GOT for 1 PLC
				GT15-RS2-9P	GT27 GT25	
				GT10-C02H-6PT9P*1	GT21(03P04PR4) GT21(03P04PR2)	
		User preparing RS232 connection diagram 5)	15m	- (Built into GOT)	GT21(04R) GT21(03P04PR2)	

*1 When a GT10-C02H-6PT9P unit of the sub version A or B is used, do not ground the case of the D-sub (9-pin) connector.
*2 GT25-W, GT2505-V does not support the option device.

When connecting to multiple PLCs

Communication driver

AB SLC500, AB 1:N

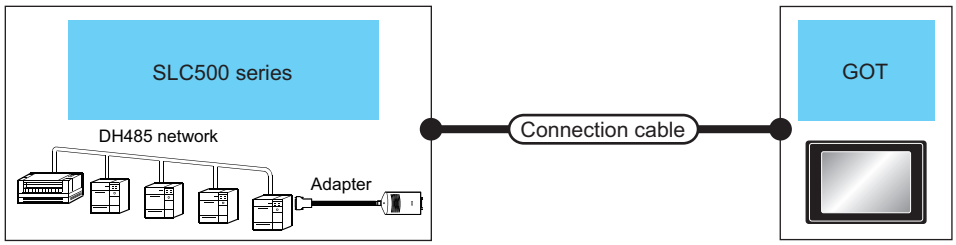

PLC			Connection cable		GOT		Number of connectable equipment
Series	Adapter*1	Communication Type	Cable model Connection diagram number	Max. distance	Option device*3	Model	
SLC500	1770-KF3	RS-232	User preparing RS232 connection diagram 2)	15m	- (Built into GOT)	GT27 GT25 GT23 GT21(07W) GT21(05Q) GS	1 GOT for 1 adapter
					GT15-RS2-9P	GT27 GT25	
					GT10-C02H-6PT9P*2	GT21(03P 04P R4) GT21(03P 04P R2)	
			User preparing RS232 connection diagram 8)	15m	- (Built into GOT)	GT21(04R) GT21(03P 04P R2)	

*1 Allen-Bradley product manufactured by Rockwell Automation, Inc. For details of the product, contact Rockwell Automation, Inc.

*2 When a GT10-C02H-6PT9P unit of the sub version A or B is used, do not ground the case of the D-sub (9-pin) connector.

*3 GT25-W, GT2505-V does not support the option device.

Connecting to MicroLogix series

When connecting to one PLC

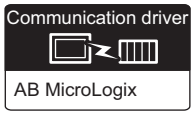

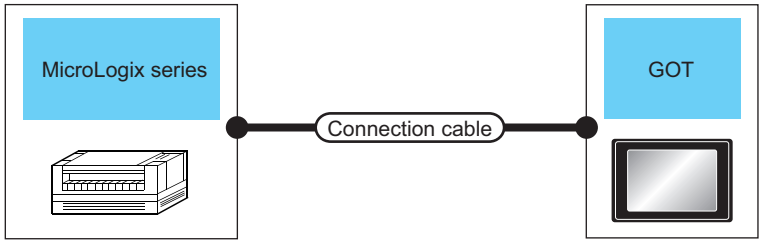

PLC		Connection cable		GOT		Number of connectable equipment
Series*2	Communication Type	Cable model Connection diagram number	Max. distance	Option device*4	Model	
MicroLogix1000 *5 MicroLogix1100 *5 MicroLogix1200 *5 MicroLogix1400 *5 MicroLogix1500 *5	RS-232	1761-CBL-PM02*1 (Series C or later) or User preparing RS232 connection diagram 3)	15m	- (Built into GOT)	GT27 GT25 GT23 GT21 GT21 GS	1 GOT for 1 PLC
				GT15-RS2-9P	GT27 GT25	
				GT10-C02H-6PT9P*3	GT21 GT21	
		User preparing RS232 connection diagram 7)	15m	- (Built into GOT)	GT21 GT21	
		1761-CBL-PM02*1 (Series C or later) or User preparing RS232 connection diagram 3) + User preparing RS232 connection diagram 6)	15m	- (Built into GOT)	GT21 GT21	
MicroLogix1400 *6	RS-232	GT09-C30R20701-9S(3m) or User preparing RS232 connection diagram 1)	15m	- (Built into GOT)	GT27 GT25 GT23 GT21 GT21 GS	
				GT15-RS2-9P	GT27 GT25	
				GT10-C02H-6PT9P*3	GT21 GT21	
		User preparing RS232 connection diagram 5)	15m	- (Built into GOT)	GT21 GT21	

*1 Allen-Bradley product manufactured by Rockwell Automation, Inc. For details of the product, contact Rockwell Automation, Inc.
*2 For MicroLogix1000 (Digital CPU), it is supported in the series D and later.
*3 When a GT10-C02H-6PT9P unit of the sub version A or B is used, do not ground the case of the D-sub (9-pin) connector.
*4 GT25-W, GT2505-V does not support the option device.
*5 Connect the GOT to COM0.
*6 Connect the GOT to COM2.

When connecting to multiple PLCs

Communication driver

AB MicroLogix

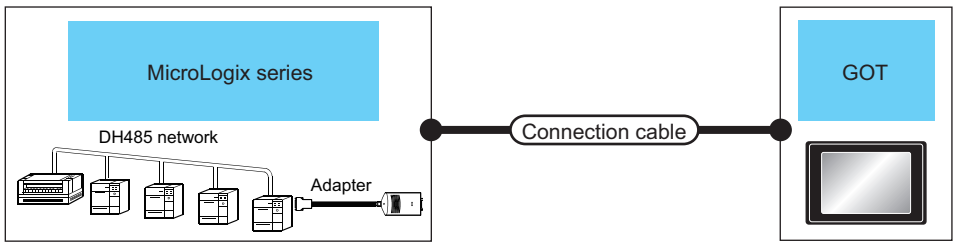

PLC			Connection cable		GOT		Number of connectable equipment
Series*2	Adapter*1	Communication Type	Cable model Connection diagram number	Max. distance	Option device*4	Model	
MicroLogix1000 MicroLogix1100 MicroLogix1200 MicroLogix1400 MicroLogix1500	1770-KF3	RS-232	User preparing RS232 connection diagram 2)	15m	- (Built into GOT)	GT27 GT25 GT23 GT21 GT21 GS	1 GOT for 1 adapter
					GT15-RS2-9P	GT27 GT25	
					GT10-C02H-6PT9P*3	GT21 GT21	
			User preparing RS232 connection diagram 8)	15m	- (Built into GOT)	GT21 GT21	

*1 Allen-Bradley product manufactured by Rockwell Automation, Inc. For details of the product, contact Rockwell Automation, Inc.

*2 For MicroLogix1000 (Digital CPU), it is supported in the series C and later.

*3 When a GT10-C02H-6PT9P unit of the sub version A or B is used, do not ground the case of the D-sub (9-pin) connector.

*4 GT25-W, GT2505-V does not support the option device.

Connecting to ControlLogix, CompactLogix, or FlexLogix series

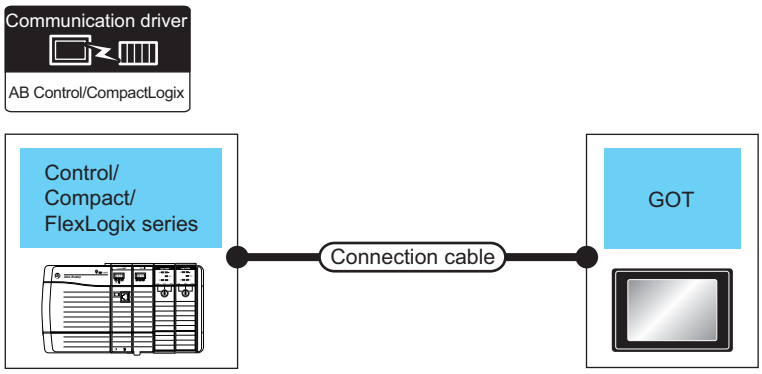

PLC		Connection cable		GOT		Number of connectable equipment
Series	Communication Type	Cable model Connection diagram number	Max. distance	Option device*2	Model	
ControlLogix CompactLogix FlexLogix	RS-232	1747-CP3*1 1756-CP3*1 or User preparing RS232 connection diagram 4)	15m	- (Built into GOT)	GT27 GT25 GT23	1 GOT for 1 PLC
				GT15-RS2-9P	GT27 GT25	

*1 Allen-Bradley product manufactured by Rockwell Automation, Inc. For details of the product, contact Rockwell Automation, Inc.
*2 GT25-W, GT2505-V does not support the option device.

Connection Diagram

The following diagram shows the connection between the GOT and the PLC.

RS-232 cable

■Connection diagram

• RS232 connection diagram 1)

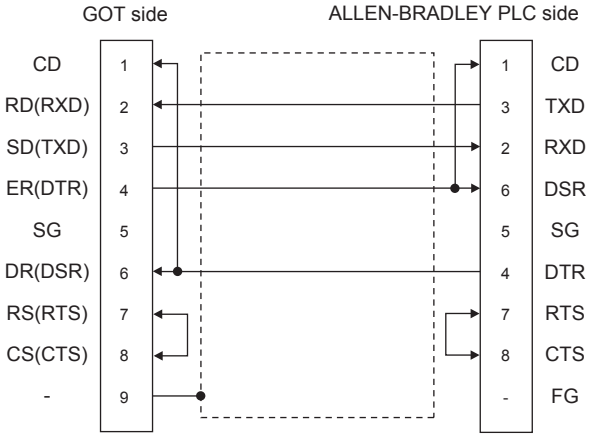

• RS232 connection diagram 2)

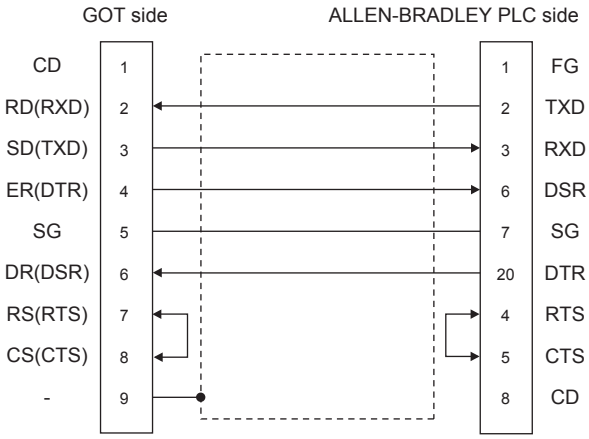

• RS232 connection diagram 3)

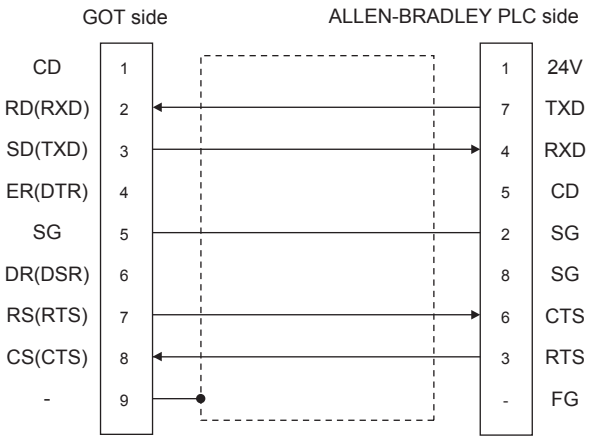

• RS232 connection diagram 4)

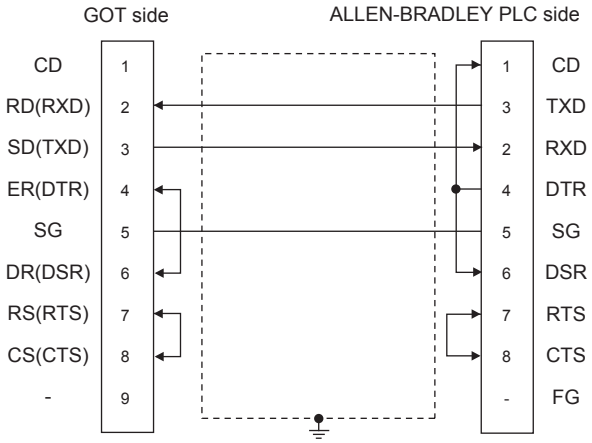

• RS232 connection diagram 5)

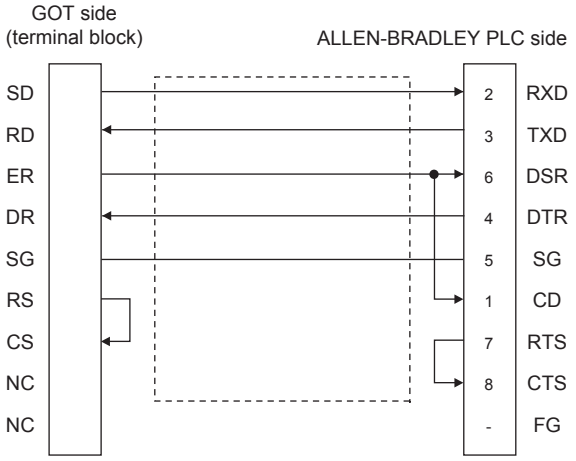

• RS232 connection diagram 6)

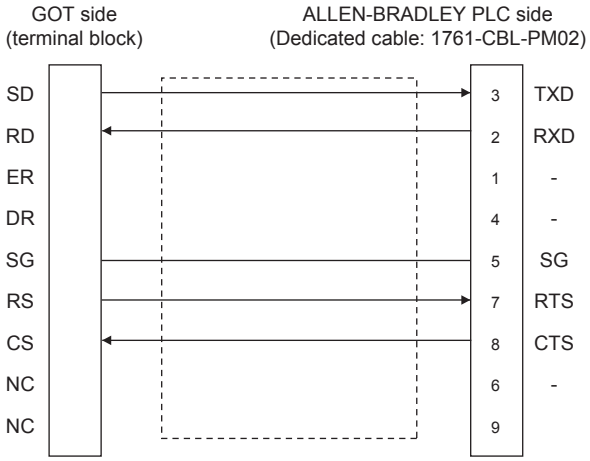

• RS232 connection diagram 7)

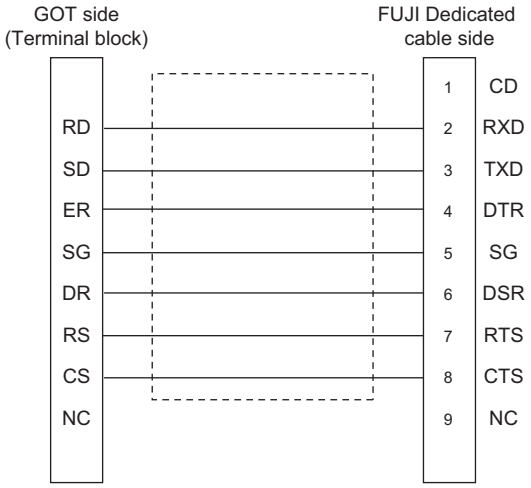

• RS232 connection diagram 8)

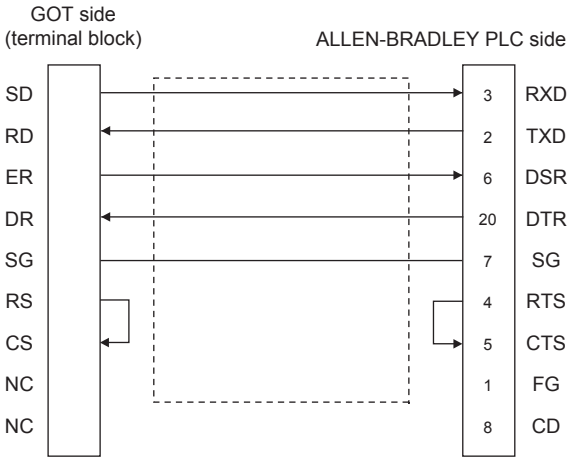

■Precautions when preparing a cable

• Cable length

The length of the RS-232 cable must be 15m or less.

• GOT side connector

For the GOT side connector, refer to the following.

☞ Page 58 GOT connector specifications

• ALLEN-BRADLEY PLC side connector

Use the connector compatible with the ALLEN-BRADLEY PLC side module.

For details, refer to the ALLEN-BRADLEY PLC user's manual.

Setting communication interface (Communication settings)

Set the channel of the connected equipment.

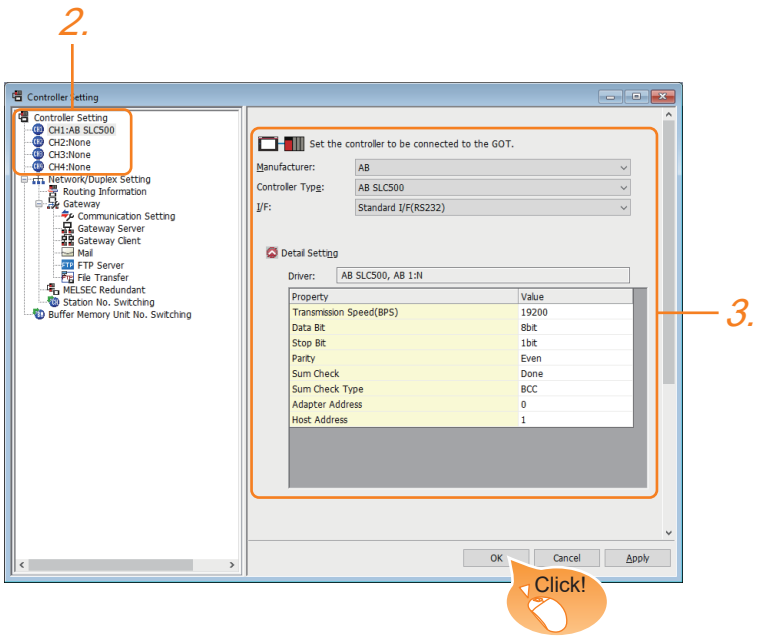

1. Select [Common] → [Controller Setting] from the menu.

2. In the [Controller Setting] window, select the channel No. to be used from the list menu.

3. Set the following items.

- [Manufacturer]: [AB]
- [Controller Type]: Select one of the following items according to the controller to be connected.

[AB SLC500]

[AB MicroLogix]

[AB Control/CompactLogix]

- [I/F]: Interface to be used
- [Detail Setting]: Configure the settings according to the usage environment.

☞ Page 424 Communication detail settings

4. When you have completed the settings, click the [OK] button.

Point

The settings of connecting equipment can be confirmed in [I/F Communication Setting].
For details, refer to the following.
☞ Page 48 I/F communication setting

Communication detail settings

■AB SLC500, AB 1: Ns

Property	Value
Transmission Speed(BPS)	19200
Data Bit	8 bit
Stop Bit	1 bit
Parity	Even
Sum Check	Done
Sum Check Type	BCC
Adapter Address	0
Host Address	1

Item	Description	Range
Transmission Speed	Set this item when change the transmission speed used for communication with the connected equipment. (Default: 19200bps)	4800bps, 9600bps, 19200bps
Adapter Address*1	The adapter address is to be specified depending on the connection type. <In direct CPU connection (serial)> The address of the connected PLC <In connection via Adapter(1770-K3)> The address of the adapter (Default: 0)	0 to 31
Host Address*1	The host address is to be specified depending on the connection type. <In direct CPU connection (serial)> Optional address <In connection via Adapter(1770-K3)> The address of the PLC of the system configuration (Default: 1)	1 to 31

*1 Do not specify the same value for the adapter address and host address.

■AB MicroLogix

Property	Value
Transmission Speed(BPS)	19200
Data Bit	8 bit
Stop Bit	1 bit
Parity	None
Sum Check	Done
Sum Check Type	BCC
Adapter Address	0
Host Address	1

Item	Description	Range
Transmission Speed	Set this item when change the transmission speed used for communication with the connected equipment. (Default: 19200bps)	4800bps, 9600bps, 19200bps, 38400bps
Sum Check Type	Specify the format in which the sum check is performed during communication when performing sum check. (Default: BCC)	BCC, CRC16
Adapter Address*1	The adapter address is to be specified depending on the connection type. <In direct CPU connection (serial)> The address of the connected PLC <In connection via Adapter(1770-K3)> The address of the adapter (Default: 0)	0 to 63
Host Address*1	The host address is to be specified depending on the connection type. <In direct CPU connection (serial)> Optional address <In connection via Adapter(1770-K3)> The address of the PLC of the system configuration (Default: 1)	0 to 63

*1 Do not specify the same value for the adapter address and host address.

■AB Control/CompactLogix

Property	Value
Transmission Speed(BPS)	19200
Data Bit	8 bit
Stop Bit	1 bit
Parity	None
Sum Check Type	BCC
Retry(Times)	3
Timeout Time(Sec)	3
Adapter Address	0
Host Address	0
Delay Time(ms)	0

Item	Description	Range
Transmission Speed	Set this item when change the transmission speed used for communication with the connected equipment. (Default: 19200bps)	9600bps, 19200bps, 38400bps, 57600bps 115200bps
Data Bit	Set this item when change the data length used for communication with the connected equipment. (Default: 8bits)	7bits/8bits
Stop Bit	Specify the stop bit length for communications. (Default: 1bit)	1bit/2bits
Parity	Specify whether or not to perform a parity check, and how it is performed during communication. (Default: None)	None Even Odd
Sum Check Type	Specify the format in which the sum check is performed during communication when performing sum check. (Default: BCC)	BCC, CRC16
Retry	Set the number of retries to be performed when a communication error occurs. (Default: 3times)	0 to 5times
Timeout Time	Set the time period for a communication to time out. (Default: 3sec)	3 to 30sec
Adapter Address	Specify the adapter address (station No. of the PLC that the GOT will monitor) in the connected network. (Default: 0)	0 to 254
Host Address	Specify the host address (station No. of the adapter to which the GOT is connected) in the connected network. (Default: 0)	0 to 254
Delay Time	Set this item to adjust the transmission timing of the communication request from the GOT. (Default: 0ms)	0 to 300ms

Point

• Communication interface setting by the Utility

The communication interface setting can be changed on the Utility's [Communication setting] after writing [Communication Settings] of project data.

For details on the Utility, refer to the following manual.

GOT2000 Series User's Manual (Utility)

• Precedence in communication settings

When settings are made by GT Designer3 or the Utility, the latest setting is effective.

PLC Side Setting

Point

ALLEN-BRADLEY PLC

For details of ALLEN-BRADLEY PLCs, refer to the following manuals.

ALLEN-BRADLEY PLC user's Manual

Direct CPU connection (serial)

Item	Setting details		
	SLC500 Series	MicroLogix 1000/1200/1500 Series	Control/Compact/FlexLogix Series
Baud Rate*1	4800bps, 9600bps, 19200bps	4800bps, 9600bps, 19200bps, 38400bps	4800bps, 9600bps, 19200bps, 38400bps
Parity	EVEN	NONE	NONE
Control Line	NO HANDSHAKING		
Communication Driver	DF1 HALF-DUPLEX SLAVE		
Duplicate Packet Detection	DISABLE		
Station Address	0		
Error Detection	BCC	BCC, CRC*2	BCC, CRC*2

*1 Set the Baud Rate according to the transmission speed setting on the GOT side.
For the transmission speed setting on the GOT side, refer to the following.
☞ Page 424 Communication detail settings

*2 Set the Error Detection according to the sum check format setting on the GOT side.
For the sum check format setting on the GOT side, refer to the following.
☞ Page 424 Communication detail settings

Connecting to DH485 network via adapter (1770-KF3)

■Setting of the adapter side

Item	Setting details
RS232 Baud Rate*1	4800bps, 9600bps, 19200bps
Parity	SLC500 series: EVEN, MicroLogix series: NONE
Flow Control	Disable (No Handshaking)
DF1 Device Category	DF1 half-duplex slave, local mode
Error Detection*2	SLC500 series: BCC, MicroLogix series: BCC/CRC
DH-485 Baud Rate*5	9600bps, 19200bps
Maximum Node Address	1 to 31*3
DH-485 Node Address	0 to 31*4

*1 Set the RS232 Baud Rate according to the transmission speed setting on the GOT side.
For the transmission speed setting on the GOT side, refer to the following.
☞ Page 424 Communication detail settings

*2 Set the Error Detection according to the sum check format setting on the GOT side.
For the sum check format setting on the GOT side, refer to the following.
☞ Page 424 Communication detail settings

*3 For the Maximum Node Address, set the same address as the Maximum Node Address on the DH-485 network.

*4 Set the DH-485 Node Address according to the Host Address on the GOT side.
Set a unique DH-485 Node Address so that it does not conflict with the Node Address of the PLC CPU on the DH-485 network.
For the Host Address setting on the GOT side, refer to the following.
☞ Page 424 Communication detail settings

*5 Set the DH-485 baud rate according to the baud rate on the CPU side.

■Setting of the CPU side

Item	Setting details
Baud Rate*1	9600bps, 19200bps
Communication Driver	DH485
Node Address	1 to 31

*1 Set the baud rate according to the DH-485 baud rate on the Adapter side.

11.3 Ethernet Connection

Ethernet connection type: Connecting to Ethernet (AB MicroLogix)

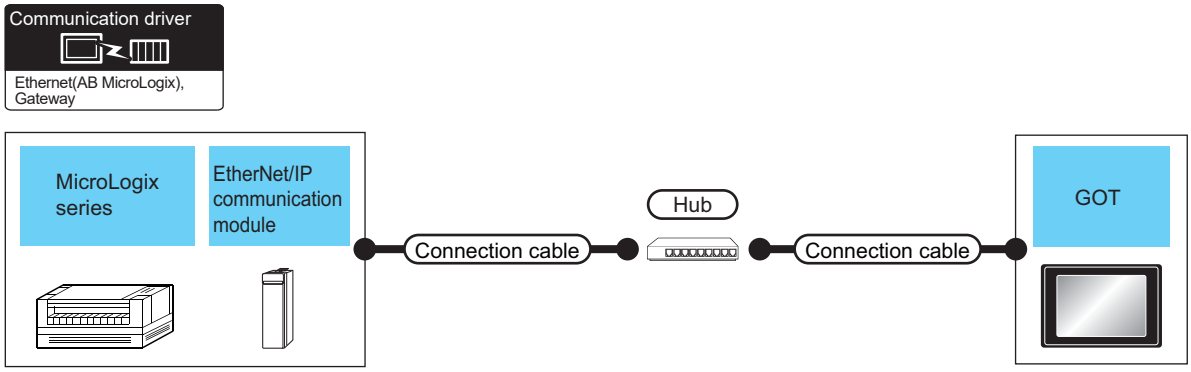

PLC			Connection cable		GOT		Number of connectable equipment
Series	EtherNet/IP communication module *1	Communication type	Cable model *2	Maximum segment length *3	Option device *4	Model	
MicroLogix1000 MicroLogix1100 MicroLogix1200 MicroLogix1400 MicroLogix1500	1761-NET-ENI	Ethernet	• 100BASE-TX Shielded twisted pair cable (STP) or unshielded twisted pair cable (UTP) of category 5 or higher • 10BASE-T Shielded twisted pair cable (STP) or unshielded twisted pair cable (UTP) of category 3 or higher	100m	- (Built into GOT)	GT27 GT25 GT23	When PLC:GOT is N:1 TCP: 16 PLCs or less for 1 GOT When PLC:GOT is 1:N TCP: 32 GOTs or less for 1 PLC
					GT25-J71E71-100	GT27 GT25	
MicroLogix1100 MicroLogix1400	-				- (Built into GOT)	GT27 GT25 GT23	
					GT25-J71E71-100	GT27 GT25	

*1 Allen-Bradley product manufactured by Rockwell Automation, Inc. For details of the product, contact Rockwell Automation, Inc.

*2 The applicable destination to connect the twisted pair cable depends on the configuration of the Ethernet network system.
Connect to the applicable Ethernet module, hub, transceiver, or other system equipment according to the Ethernet network system.
Use the cable, connector, or hub that meets the IEEE802.3 10BASE-T/100BASE-TX standard.
To connect the target device and hub, use a cable according to the target device configuration.

*3 The length between the hub and node.
The maximum length depends on the Ethernet equipment you use.
When a repeater hub is used, the number of connectable personal computers is as follows.
• 10BASE-T: Max. 4 nodes for a cascade connection (500 m)
• 100BASE-TX: Max. 2 nodes for a cascade connection (205 m)
For the cascade connection between the switching hubs, there is no theoretical limit to the number of cascades.
For the limit, contact the switching hub manufacturer.

*4 GT25-W and GT2505-V do not support the option device.

Ethernet connection type: Connecting to Ethernet (AB)

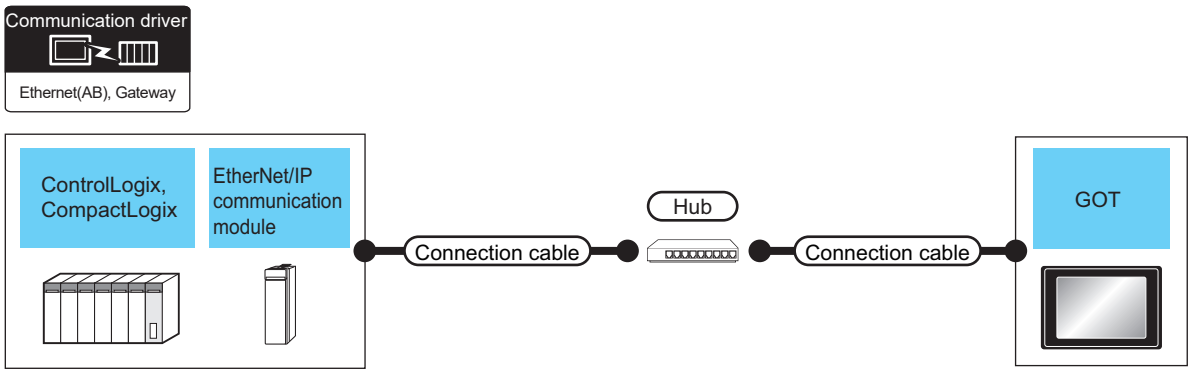

PLC			Connection cable		GOT		Number of connectable equipment
Series	EtherNet/IP communication module *1	Communication Type	Cable model *2	Maximum segment length *3	Option device *6	Model *4	
ControlLogix	*4	Ethernet	• 100BASE-TX Shielded twisted pair cable (STP) or unshielded twisted pair cable (UTP) of category 5 or higher • 10BASE-T Shielded twisted pair cable (STP) or unshielded twisted pair cable (UTP) of category 3 or higher	100m	- (Built into GOT)	GT27 GT25 GT23 GT21 GT21 GT21 GS	*5
					GT25-J71E71-100	GT27 GT25	
CompactLogix	-	Ethernet		100m	- (Built into GOT)	GT27 GT25 GT23 GT21 GT21 GT21 GS	When PLC:GOT is N:1 TCP: 128 PLCs or less for 1 GOT When PLC:GOT is 1:N TCP: 32 GOTs or less (recommended to 16 or less) for 1 PLC
					GT25-J71E71-100	GT27 GT25	

*1 Allen-Bradley product manufactured by Rockwell Automation, Inc. For details of the product, contact Rockwell Automation, Inc.

*2 The destination connected with the twisted pair cable varies with the configuration of the applicable Ethernet network system.
Connect to the Ethernet module, hub, transceiver or other system equipment corresponding to the applicable Ethernet network system.
Use cables, connectors, and hubs that meet the IEEE802.3 10BASE-T/100BASE-TX standards.
To connect the target device and hub, use a cable according to the target device configuration.

*3 A length between a hub and a node.
The maximum distance differs depending on the Ethernet device to be used.
The following shows the number of the connectable nodes when a repeater hub is used.
• 10BASE-T: Max. 4 nodes for a cascade connection (500m)
• 100BASE-TX: Max. 2 nodes for a cascade connection (205m)
When switching hubs are used, the cascade connection between the switching hubs has no logical limit for the number of cascades.
For the limit, contact the switching hub manufacturer.

*4 The connectable EtherNet/IP communication module differs depending on the PLC model name.

PLC model name	Connectable EtherNet/IP communication module
1756-L, 1756-L1M1, 1756-L1M2, 1756-L1M3	1756-ENET(10Mbps), 1756-ENBT(10/100Mbps)
1756-L61, 1756-L62, 1756-L63	1756-ENET(10Mbps), 1756-ENBT(10/100Mbps)
1756-L64	1756-ENET(10Mbps), 1756-ENBT(10/100Mbps), 1756-EN2T(10/100Mbps)
1756-L55M12, 1756-L55M13, 1756-L55M14, 1756-L55M16, 1756-L55M22, 1756-L55M23, 1756-L55M24	1756-ENET(10Mbps), 1756-ENBT(10/100Mbps)
1756-L72S	1756-EN2T(10/100Mbps)
1756-L71, 1756-L72, 1756-L73, 1756-L74, 1756-L75	1756-EN2T(10/100Mbps), 1756-EN2TR(10/100Mbps), 1756-EN3TR(10/100Mbps), 1756-ENBT(10/100Mbps)
1756-L81E, 1756-L82E, 1756-L83E, 1756-L84E, 1756-L85E	1756-EN2T(10/100Mbps), 1756-EN2TR(10/100Mbps), 1756-EN3TR(10/100Mbps), 1756-ENBT(10/100Mbps), 1756-EN2TSC(10/100Mbps)

*5 The number of the connectable GOTs for 1 PLC differs depending on the PLC model name.
(ControlLogix5550/5555/5560)
• When PLC:GOT is N:1, the following number of the PLCs can be connected to 1 GOT.
TCP: 128 or less
When PLC:GOT is 1:N, the following number of the GOTs can be connected to 1 PLC.
TCP: 64 or less (recommended to 16 or less)
(ControlLogix5570/ControlLogix5580)
• When PLC:GOT is N:1, the following number of the PLCs can be connected to 1 GOT.
TCP: 128 or less
When PLC:GOT is 1:N, the following number of the GOTs can be connected to 1 PLC.
TCP: 128 or less (recommended to 16 or less)

*6 GT25-W, GT2505-V does not support the option device.

Ethernet connection type: Connecting to Ethernet (AB Tag)

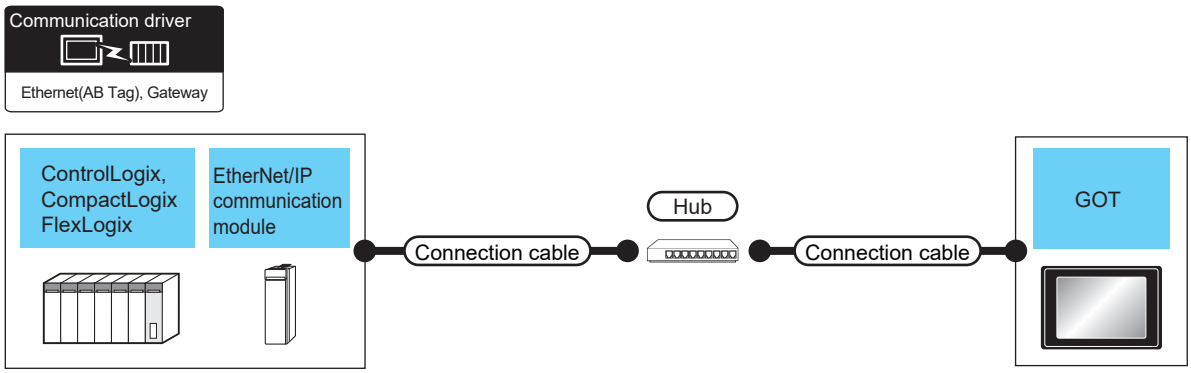

PLC			Connection cable		GOT		Number of connectable equipment
Series	EtherNet/IP communication module*1	Communication Type	Cable model*2	Maximum segment length*3	Option device*5	Model	
ControlLogix	*4	Ethernet	• 100BASE-TX Shielded twisted pair cable (STP) or unshielded twisted pair cable (UTP) of category 5 or higher • 10BASE-T Shielded twisted pair cable (STP) or unshielded twisted pair cable (UTP) of category 3 or higher	100m	- (Built into GOT)	GT27 GT25 GT23	When PLC:GOT is N:1 TCP: 16 PLCs or less for 1 GOT When PLC:GOT is 1:N TCP: 32 GOTs or less (recommended to 16 or less) for 1 PLC
					GT25-J71E71-100	GT27 GT25	
CompactLogix	-	Ethernet		100m	- (Built into GOT)	GT27 GT25 GT23	When PLC:GOT is N:1 TCP: 16 PLCs or less for 1 GOT When PLC:GOT is 1:N TCP: 20 GOTs or less (recommended to 16 or less) for 1 PLC
					GT25-J71E71-100	GT27 GT25	
FlexLogix	1788-ENBT/A	Ethernet		100m	- (Built into GOT)	GT27 GT25 GT23	When PLC:GOT is N:1 TCP: 16 PLCs or less for 1 GOT When PLC:GOT is 1:N TCP: 20 GOTs or less (recommended to 16 or less) for 1 PLC
					GT25-J71E71-100	GT27 GT25	

*1 Allen-Bradley product manufactured by Rockwell Automation, Inc. For details of the product, contact Rockwell Automation, Inc.

*2 The destination connected with the twisted pair cable varies with the configuration of the applicable Ethernet network system.
Connect to the Ethernet module, hub, transceiver or other system equipment corresponding to the applicable Ethernet network system.
Use cables, connectors, and hubs that meet the IEEE802.3 10BASE-T/100BASE-TX standards.
To connect the target device and hub, use a cable according to the target device configuration.

*3 A length between a hub and a node.
The maximum distance differs depending on the Ethernet device to be used.
The following shows the number of the connectable nodes when a repeater hub is used.
• 10BASE-T: Max. 4 nodes for a cascade connection (500m)
• 100BASE-TX: Max. 2 nodes for a cascade connection (205m)
When switching hubs are used, the cascade connection between the switching hubs has no logical limit for the number of cascades.
For the limit, contact the switching hub manufacturer.

*4 The connectable EtherNet/IP communication module differs depending on the PLC model name.

PLC model name	Connectable EtherNet/IP communication module
1756-L, 1756-L1M1, 1756-L1M2, 1756-L1M3	1756-ENET(10Mbps), 1756-ENBT(10/100Mbps)
1756-L61, 1756-L62, 1756-L63	1756-ENET(10Mbps), 1756-ENBT(10/100Mbps)
1756-L64	1756-ENET(10Mbps), 1756-ENBT(10/100Mbps), 1756-EN2T(10/100Mbps)
1756-L55M12, 1756-L55M13, 1756-L55M14, 1756-L55M16, 1756-L55M22, 1756-L55M23, 1756-L55M24	1756-ENET(10Mbps), 1756-ENBT(10/100Mbps)
1756-L72S	1756-EN2T(10/100Mbps)
1756-L71, 1756-L72, 1756-L73, 1756-L74, 1756-L75	1756-EN2T(10/100Mbps), 1756-EN2TR(10/100Mbps), 1756-EN3TR(10/100Mbps), 1756-ENBT(10/100Mbps)
1756-L81E, 1756-L82E, 1756-L83E, 1756-L84E, 1756-L85E	1756-EN2T(10/100Mbps), 1756-EN2TR(10/100Mbps), 1756-EN3TR(10/100Mbps), 1756-ENBT(10/100Mbps), 1756-EN2TSC(10/100Mbps)

*5 GT25-W, GT2505-V does not support the option device.

GOT Side Settings

Setting communication interface (Communication settings)

Set the channel of the connected equipment.

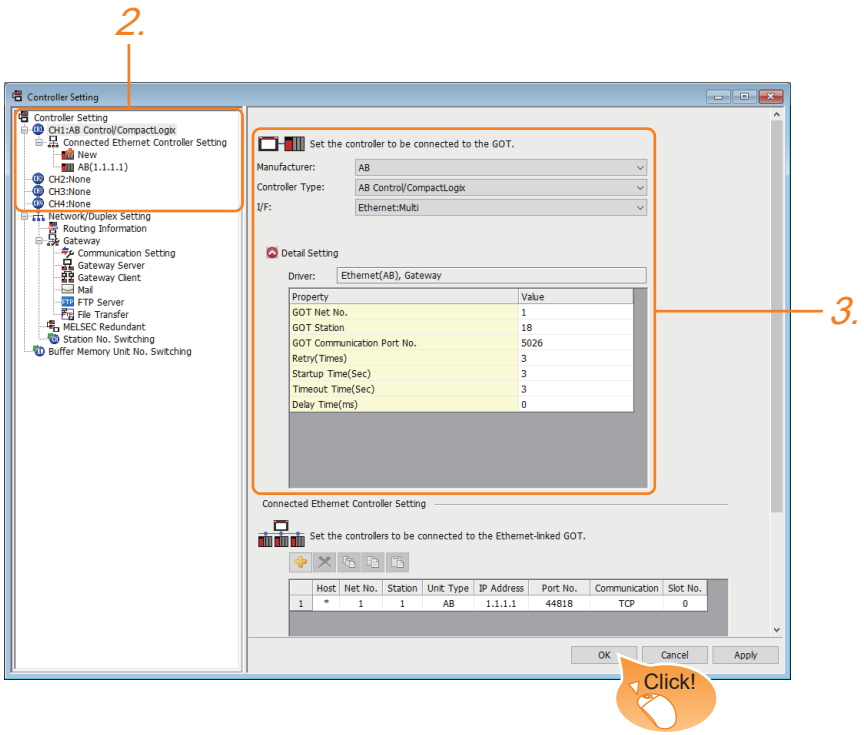

1. Select [Common] → [Controller Setting] from the menu.

2. In the [Controller Setting] window, select the channel No. to be used from the list menu.

3. Set the following items.

- [Manufacturer]: [AB]
- [Controller Type]: Depends on the Ethernet connection type.

Ethernet (AB MicroLogix): [AB MicroLogix]

Ethernet (AB): [AB Control/CompactLogix]

Ethernet (AB Tag): [AB Control/CompactLogix (Tag)]

- [I/F]: [Ethernet:Multi]
- [Detail Setting]: Configure the settings according to the usage environment.

☞ Page 435 Communication detail settings

4. When you have completed the settings, click the [OK] button.

Point

The settings of connecting equipment can be confirmed in [I/F Communication Setting].

For details, refer to the following.

☞ Page 48 I/F communication setting

Communication detail settings

Make the settings according to the usage environment.

Property	Value
GOT Net No.	1
GOT Station	18
GOT Communication Port No.	5017
Retry(Times)	3
Startup Time(Sec)	3
Timeout Time(Sec)	3
Delay Time(ms)	0

Item	Description	Range
GOT Net No.	Set the network No. of the GOT. (Default: 1)	1 to 239
GOT Station*1	Set the station No. of the GOT. (Default: 18)	1 to 64
GOT Communication Port No.	Set the GOT port No. for the connection with the Ethernet equipment. (Default: 5026*2*3)	1024 to 5010, 5014 to 44817, 44819 to 49152, 49171 to 65534
Retry	Set the number of retries to be performed when a communication timeout occurs. When receiving no response after retries, the communication times out. (Default: 3times)	0 to 5times
Startup Time	Specify the time period from the GOT startup until GOT starts the communication with the PLC CPU. (Default: 3sec)	1 to 255sec
Timeout Time	Set the time period for a communication to time out. (Default: 3sec)	3 to 90sec
Delay Time	Set the delay time for reducing the load of the network/destination PLC. (Default: 0ms)	0 to 10000 (ms)

*1 Set different values for [GOT Station] of [Detail Setting] and [Station] of [Connected Ethernet Controller Setting].
☞ Page 436 Connected Ethernet Controller Setting

*2 When the communication driver is set to [Ethernet(AB Tag), Gateway], the default is 5028.

*3 When assigning the same driver to the multiple channels, in the communication drivers set as the second and following, the default value of [GOT Communication Port No.] becomes the earliest number in the vacant numbers of No. 6000 and later.

GOT Ethernet Setting

The GOT can be connected to a different network by configuring the following setting.

■GOT IP address setting

Set the following communication port setting.

- Standard port (When using GT25-W, port 1)
- Extension port (When using GT25-W, port 2)

■GOT Ethernet common setting

Set the following setting which is common to the standard port and the extension port, or port 1 and port 2.

- [Default Gateway]
- [Peripheral S/W Communication Port No.]
- [Transparent Port No.]

■IP filter setting

By configuring the IP filter setting, the access from the specific IP address can be permitted or shut off.

For the detailed settings, refer to the following manual.

☞ Page 44 GOT Ethernet Setting

Connected Ethernet Controller Setting

■Ethernet connection type: Ethernet (AB MicroLogix)

The following describes [Connected Ethernet Controller Setting] when [AB MicroLogix] is selected for [Controller Type].

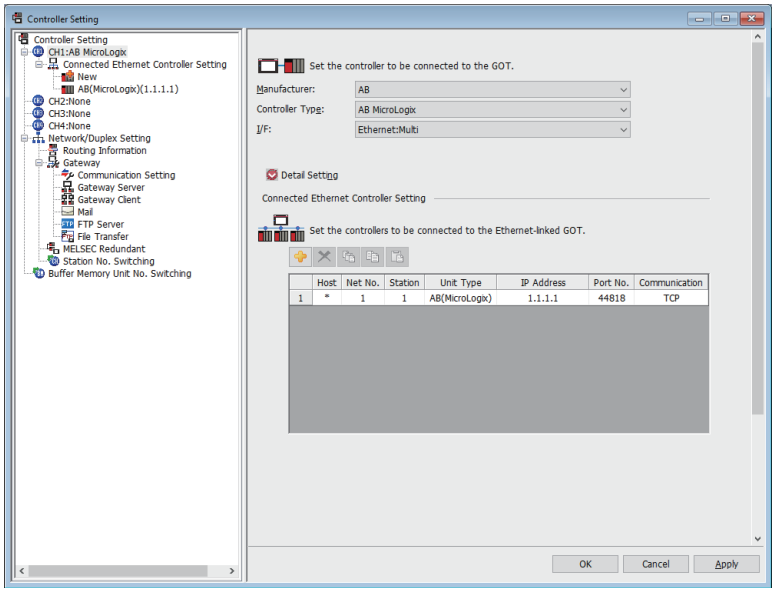

Item	Description	Set value
Host	The host is displayed. It refers to a station that can be connected without setting a station number. (The host is indicated with an asterisk (*).)	—
Net No.	Set the network No. of the connected Ethernet equipment. (Default: 1)	1 to 239
Station *1	Set the station No. of the connected Ethernet equipment. (Default: 1)	1 to 64
Unit Type	AB(MicroLogix) (fixed)	AB(MicroLogix) (fixed)
IP address	Set the IP address of the connected Ethernet equipment. (Default: 1.1.1.1)	PLC side IP address
Port No.	44818 (fixed)	44818 (fixed)
Communication	TCP (fixed)	TCP (fixed)

*1 Set different values for [GOT Station] of [Detail Setting] and [Station] of [Connected Ethernet Controller Setting].
☞ Page 435 Communication detail settings

■Ethernet connection type: Ethernet (AB)

The following describes [Connected Ethernet Controller Setting] when [AB Control/CompactLogix] is selected for [Controller Type].

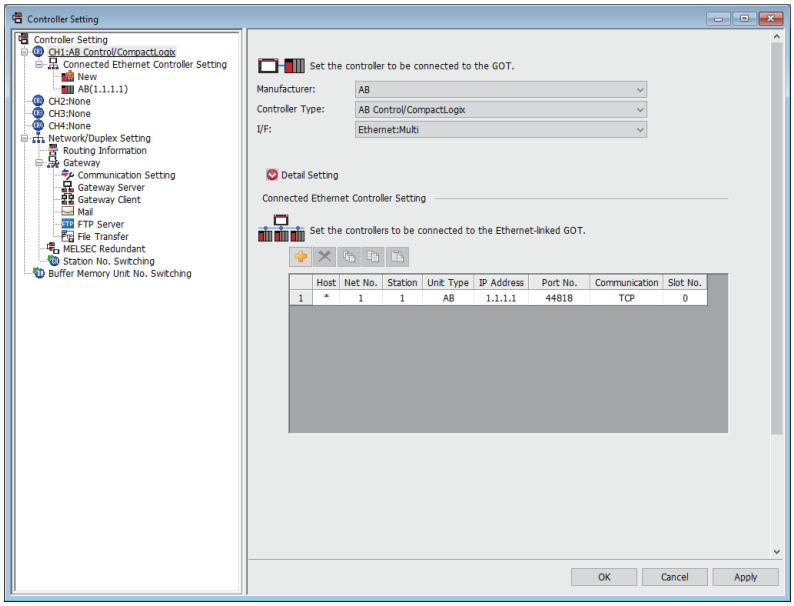

Item	Description	Set value
Host	The host is displayed. It refers to a station that can be connected without setting a station number. (The host is indicated with an asterisk (*).)	—
Net No.	Set the network No. of the connected Ethernet equipment. (Default: 1)	1 to 239
Station *1	Set the station No. of the connected Ethernet equipment. (Default: 1)	1 to 64
Unit Type	AB (fixed)	AB (fixed)
IP address	Set the IP address of the connected Ethernet equipment. (Default: 1.1.1.1)	PLC side IP address
Port No.	44818 (fixed)	44818 (fixed)
Communication format	TCP (fixed)	TCP (fixed)
Slot No.	Set the slot No. connected to the CPU module in the PLC module. (Default: 0)	0 to 16

*1 Set different values for [GOT Station] of [Detail Setting] and [Station] of [Connected Ethernet Controller Setting].
☞ Page 435 Communication detail settings

■Ethernet connection type: Ethernet (AB Tag)

The following describes [Connected Ethernet Controller Setting] when [AB Control/CompactLogix(Tag)] is selected for [Controller Type].

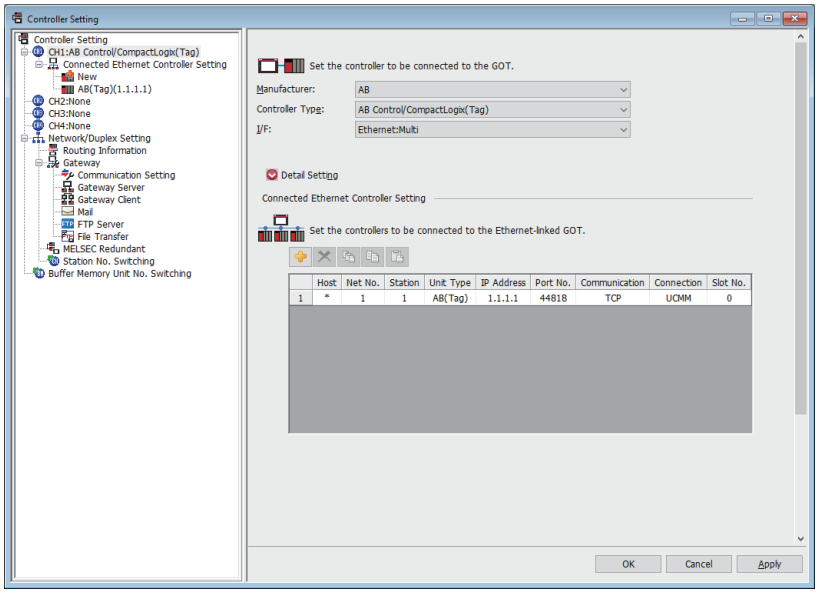

Item	Description	Range
Host	The host is displayed. It refers to a station that can be connected without setting a station number. (The host is indicated with an asterisk (*).)	—
Net No.	Set the network No. of the connected Ethernet equipment. (Default: 1)	1 to 239
Station *1	Set the station No. of the connected Ethernet equipment. (Default: 1)	1 to 64
Unit Type	AB (Tag) (fixed)	AB (Tag) (fixed)
IP Address	Set the IP address of the connected Ethernet equipment. (Default: 1.1.1.1)	PLC side IP address
Port No.	44818 (fixed)	44818 (fixed)
Communication	TCP (fixed)	TCP (fixed)
Connection	Set the message communication type according to the connected Ethernet equipment. (Default: UCMM)	UCMM Class3
Slot No.	Set the slot No. connected to the CPU module in the PLC module. (Default: 0)	0 to 20

*1 Set different values for [GOT Station] of [Detail Setting] and [Station] of [Connected Ethernet Controller Setting].
☞ Page 435 Communication detail settings

Point

• [Connected Ethernet Controller Setting] for GT21 and GS21

Effective range of [Connected Ethernet Controller Setting]

Only [1] to [4] of [Connected Ethernet Controller Setting] can be used for GT21 and GS21.

If [5] onwards are used, the settings are invalid on GT21 and GS21.

[Host] setting

Set [Host] within the range from [1] to [4] in [Connected Ethernet Controller Setting].

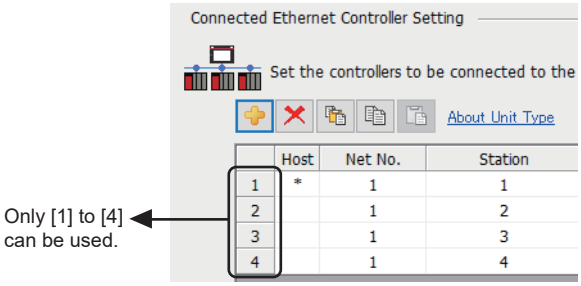

• [Connected Ethernet Controller Setting] for a multiple CPU system

When the Ethernet connection type is Ethernet (AB Tag), monitoring in the multiple CPU system is possible by setting a different [Slot No.] for one module with the same IP address in [Connected Ethernet Controller Setting].

The following shows [Connected Ethernet Controller Setting] for configuring a system.

(Example: System configuration)

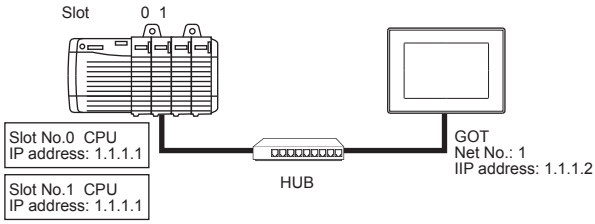

(Example: Settings in [Connected Ethernet Controller Setting])

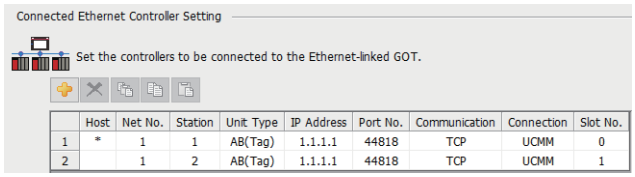

In the above settings, the GOT monitors the CPU as follows.

When [Net No.] is set to 1 and [Station No.] is set to 1 for an object, the GOT monitors the CPU whose slot No. is 0.

When [Net No.] is set to 1 and [Station No.] is set to 2 for an object, the GOT monitors the CPU whose slot No. is 1.

• Communication interface setting by the Utility

The communication interface setting can be changed on the Utility's [Communication setting] after writing [Communication Settings] of project data.

For details on the Utility, refer to the following manual.

GOT2000 Series User's Manual (Utility)

• Precedence in communication settings

When settings are made by GT Designer3 or the Utility, the latest setting is effective.

• Setting IP address and port No

The same IP address cannot be set for the same port No.The same IP address can be set for the different port No.

PLC side setting

Point

ALLEN-BRADLEY PLC

For details of ALLEN-BRADLEY PLCs, refer to the following manuals.

📖ALLEN-BRADLEY PLC user's Manual

Parameter setting

Set the following parameters with the software package manufactured by the Allen-Bradley.

Item	Setting details
Name	Sets the name.
IP Address	IP address of the connected module*1
Slot	Slots No. for installing the EtherNet/IP communication module*2

*1 For the IP address, make the same setting as that of each Ethernet module set on GT Designer3.
Do not set the same IP Address as those of GOT and controller on the Ethernet network.
For the address setting on GT Designer3, refer to the following.
☞ Page 435 Communication detail settings

*2 The EtherNet/IP communication module cannot be connected to the slot [0].
Set the slot No. to [1] or later.

Rotary switch setting

In EtherNet/IP communication module (1756-EN2T, 1756-EN2TR, 1756-EN3TR, and 1756-EN2TSC only), IP address can be set by rotary switches. EtherNet/IP communication module have 3 rotary switches named X, Y, and Z. The following shows the procedure to set IP address using the rotary switches X, Y, and Z.

For details of these rotary switches, refer to the following manual.

📖Manual of EtherNet/IP communication module to be used

Rotary switch setting value	Description
1 to 254	The fourth octet of the IP address is the value set by the rotary switches. *The network address part is fixed to [192.168.1.***]. (Setting example) If the switches are set to X=0, Y=3, Z=1, IP address of EtherNet/IP communication module will be [192.168.1.31]. Adjust the settings with the GOT settings. ☞ Page 436 Connected Ethernet Controller Setting
888	The setting value which sets EtherNet/IP communication module to initial setting. When the setting value is [888], the EtherNet/IP communication module cannot be connected with the GOT.
Other than above	To set the IP address with a peripheral tool, set the values on left for the rotary switches.

Precautions

When setting IP address

Do not use "0" and "255" at the end of an IP address.

(Numbers of *.*.*.0 and *.*.*.255 are used by the system.)

The GOT may not monitor the controller correctly with the above numbers.

Consult with the administrator of the network before setting an IP address to the GOT and controller.

When connecting to multiple GOTs

■Setting Station

When connecting two or more GOTs in the Ethernet network, set each [Station] to the GOT.

☞ Page 436 Connected Ethernet Controller Setting

■Setting IP address

Do not use the IP address "192.168.0.18" when using multiple GOTs with the GOT 1000 series mixed.

A communication error may occur on the GOT with the IP address.

When connecting to the multiple network equipment (including GOT) in a segment

By increasing the network load, the transmission speed between the GOT and PLC may be reduced.

The following actions may improve the communication performance.

- Using a switching hub
- More high speed by 100BASE-TX (100Mbps)Reduction of the monitoring points on GOT

Tag name of AB native tag

When using the multiple AB native tags with long names, the monitor display speed may slow down.

For details, refer to the following manual.

📖GT Designer3 (GOT2000) Screen Design Manual

11.4 Settable Device Range

For the device setting dialog and range of devices usable in the GOT, refer to the following.

☞ Page 611 ALLEN-BRADLEY equipment ([AB SLC500])
☞ Page 614 ALLEN-BRADLEY equipment ([AB MicroLogix])
☞ Page 619 ALLEN-BRADLEY equipment ([AB MicroLogix (Extended)])
☞ Page 619 ALLEN-BRADLEY equipment ([AB Control/CompactLogix])
☞ Page 623 ALLEN-BRADLEY equipment ([AB Control/CompactLogix(Tag)])

12 GE PLC

- Page 443 Connectable Model List
- Page 445 System Configuration
- Page 452 Connection Diagram
- Page 455 GOT Side Settings
- Page 457 PLC Side Setting
- Page 460 Settable Device Range
- Page 460 Precautions

12.1 Connectable Model List

The following table shows the connectable models.

Series	Model name	Clock	Communication Type	Connectable model	Refer to
Series90-30	IC693CPU311	×	RS-232 RS-422	GT27 GT25 GT23	☞ Page 445 Connecting to Series90-30
	IC693CPU313				
	IC693CPU323				
	IC693CPU350				
	IC693CPU360				
	IC693CPU363				
	IC693CPU366				
	IC693CPU367				
	IC693CPU374				
Series90-70	IC697CPU731	×	RS-232 RS-422	GT27 GT25 GT23	☞ Page 448 Connecting to Series90-70
	IC697CPX772				
	IC697CPX782				
	IC697CPX928				
	IC697CPX935				
	IC697CPU780				
	IC697CGR772				
	IC697CGR935				
	IC697CPU788				
	IC697CPU789				
	IC697CPM790				

Series	Model name	Clock	Communication Type	Connectable model	Refer to
VersaMax Micro	IC200UAA003	×	RS-232 RS-422	GT 27 GT 25 GT 23	☞ Page 450 Connecting to VersaMax Micro
	IC200UAL004				
	IC200UAL005				
	IC200UAL006				
	IC200UAA007				
	IC200UAR028				
	IC200UDD110				
	IC200UDD120				
	IC200UDD212				
	IC200UDR005				
	IC200UDR006				
	IC200UDR010				
	IC200UDD064				
	IC200UDD164				
	IC200UDR164				
	IC200UDR064				
	IC200UAR014				
	IC200UDD104				
	IC200UDD112				
	IC200UDR001				
	IC200UDR002				
	IC200UDR003				

12.2 System Configuration

Connecting to Series90-30

Point

Connectable model

Only the models that are compatible with SNP-X protocol can be connected.

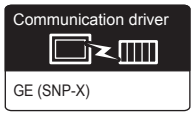

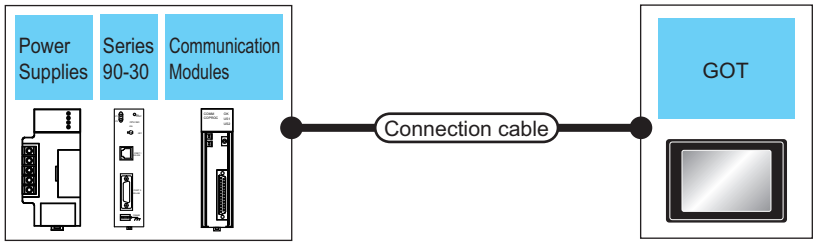

For the RS-232 connection

PLC				Connection cable		GOT		Number of connectable equipment
Power Supplies*1	Model name	Communication Modules*1	Communication Type	Cable model Connection diagram number	Max. distance	Option device*2	Model	
IC693PWR321 IC693PWR330 IC693PWR331 IC693PWR332 IC693PWR328	IC693CPU311 IC693CPU313 IC693CPU323	IC693CMM311	RS-232	User preparing Page 452 RS-232 connection diagram 1)	15m	- (Built into GOT)	GT27 GT25 GT23	1 PLC for 1 GOT
						GT15-RS2-9P	GT27 GT25	
IC693PWR321 IC693PWR330 IC693PWR331 IC693PWR332 IC693PWR328	IC693CPU350 IC693CPU360 IC693CPU366 IC693CPU367 IC693CPU374	IC693CMM311	RS-232	User preparing Page 452 RS-232 connection diagram 1)	15m	- (Built into GOT)	GT27 GT25 GT23	
						GT15-RS2-9P	GT27 GT25	
IC693PWR321 IC693PWR330 IC693PWR331 IC693PWR332 IC693PWR328	IC693CPU363	IC693CMM311	RS-232	User preparing Page 452 RS-232 connection diagram 1)	15m	- (Built into GOT)	GT27 GT25 GT23	
						GT15-RS2-9P	GT27 GT25	

*1 Product manufactured by GE Corporation.
For details of the product, contact GE Corporation.

*2 GT25-W, GT2505-V does not support the option device.

For the RS-422 connection (connecting to the Communication Modules)

PLC				Connection cable		GOT		Number of connectable equipment
Power Supplies*1	Model name	Communication Modules*1	Communication Type	Cable model Connection diagram number	Max. distance	Option device*2	Model	
IC693PWR321 IC693PWR330 IC693PWR331 IC693PWR332 IC693PWR328	IC693CPU311 IC693CPU313 IC693CPU323	IC693CMM311	RS-422	User preparing Page 453 RS-422 connection diagram 1)	1200m	- (Built into GOT)	GT27 GT25 GT23	8 PLCs for 1 GOT
						GT15-RS4-9S	GT27 GT25	
IC693PWR321 IC693PWR330 IC693PWR331 IC693PWR332 IC693PWR328	IC693CPU350 IC693CPU360 IC693CPU366 IC693CPU367 IC693CPU374	IC693CMM311	RS-422	User preparing Page 453 RS-422 connection diagram 1)	1200m	- (Built into GOT)	GT27 GT25 GT23	
						GT15-RS4-9S	GT27 GT25	
IC693PWR321 IC693PWR330 IC693PWR331 IC693PWR332 IC693PWR328	IC693CPU363	IC693CMM311	RS-422	User preparing Page 453 RS-422 connection diagram 1)	1200m	- (Built into GOT)	GT27 GT25 GT23	
						GT15-RS4-9S	GT27 GT25	

*1 Product manufactured by GE Corporation.
For details of the product, contact GE Corporation.

*2 GT25-W, GT2505-V does not support the option device.

For the RS-422 connection (connecting to the Power Supplies)

PLC			Connection cable		GOT		Number of connectable equipment
Power Supplies*1	Model name	Communication Type	Cable model Connection diagram number	Max. distance	Option device*2	Model	
IC693PWR321 IC693PWR330 IC693PWR331 IC693PWR332 IC693PWR328	IC693CPU350 IC693CPU360 IC693CPU366 IC693CPU367 IC693CPU374	RS-422	User preparing Page 453 RS-422 connection diagram 2)	1200m	- (Built into GOT)	GT27 GT25 GT23	8 PLCs for 1 GOT
					GT15-RS4-9S	GT27 GT25	
IC693PWR321 IC693PWR330 IC693PWR331 IC693PWR332 IC693PWR328	IC693CPU363	RS-422	User preparing Page 453 RS-422 connection diagram 2)	1200m	- (Built into GOT)	GT27 GT25 GT23	
					GT15-RS4-9S	GT27 GT25	

*1 Product manufactured by GE Corporation.
For details of the product, contact GE Corporation.

*2 GT25-W, GT2505-V does not support the option device.

For the RS-422 connection (connecting to the PLC)

PLC			Connection cable		GOT		Number of connectable equipment
Power Supplies*1	Model name	Communication Type	Cable model Connection diagram number	Max. distance	Option device*2	Model	
IC693PWR321 IC693PWR330 IC693PWR331 IC693PWR332 IC693PWR328	IC693CPU363 (CPU port 2)	RS-422	User preparing Page 453 RS-422 connection diagram 2)	1200m	- (Built into GOT)	GT27 GT25 GT23	8 PLC for 1 GOT
					GT15-RS4-9S	GT27 GT25	

*1 Product manufactured by GE Corporation.
For details of the product, contact GE Corporation.

*2 GT25-W, GT2505-V does not support the option device.

Connecting to Series90-70

Point

Only the models that are compatible with SNP-X protocol can be connected.

For the RS-232 connection

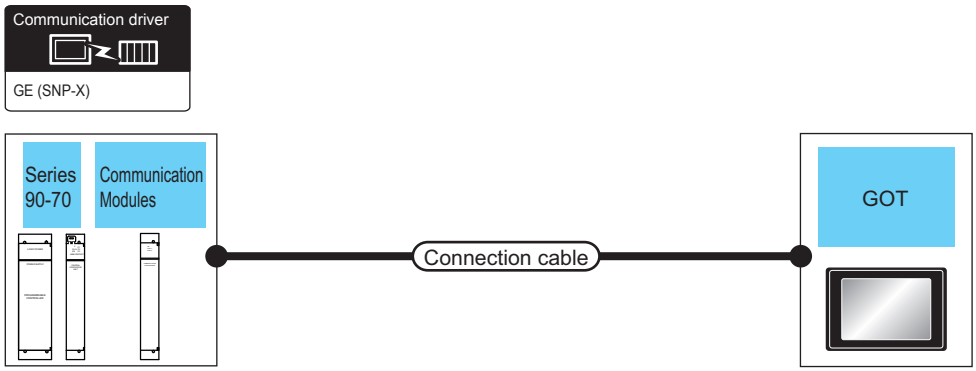

PLC			Connection cable		GOT		Number of connectable equipment
Model name	Communication Modules*1	Communication Type	Cable model Connection diagram number	Max. distance	Option device*2	Model	
IC697CPX772 IC697CPX782 IC697CPX928 IC697CPX935 IC697CPU780 IC697CPU788 IC697CPU789 IC697CPU731 IC697CGR772 IC697CGR935 IC697CPM790	IC697CMM711	RS-232	User preparing Page 452 RS-232 connection diagram 1)	15m	- (Built into GOT)	GT27 GT25 GT23	1 PLC for 1 GOT
					GT15-RS2-9P	GT27 GT25	

*1 Product manufactured by GE Corporation.
For details of the product, contact GE Corporation.

*2 GT25-W, GT2505-V does not support the option device.

For the RS-422 connection

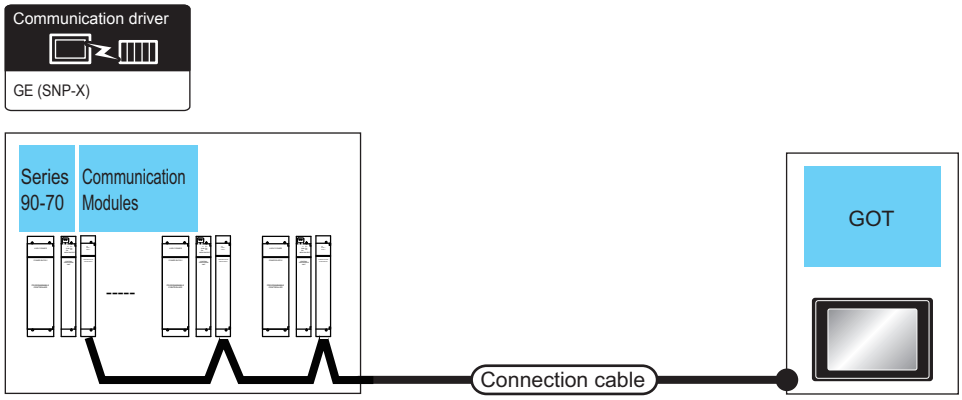

PLC			Connection cable		GOT		Number of connectable equipment
PLC	Communication Modules*1	Communication Type	Cable model Connection diagram number	Max. distance	Option device*2	Model	
IC697CPX772 IC697CPX782 IC697CPX928 IC697CPX935 IC697CPU780 IC697CPU788 IC697CPU789 IC697CPU731 IC697CGR772 IC697CGR935 IC697CPM790	IC697CMM711	RS-422	User preparing Page 453 RS-422 connection diagram 1)	1200m	- (Built into GOT)	GT27 GT25 GT23	Up to 8 PLCs for 1 GOT
					GT15-RS4-9S	GT27 GT25	

*1 Product manufactured by GE Corporation.
For details of the product, contact GE Corporation.

*2 GT25-W, GT2505-V does not support the option device.

Connecting to VersaMax Micro

Point

Only the models that are compatible with SNP-X protocol can be connected.

For the RS-232 connection

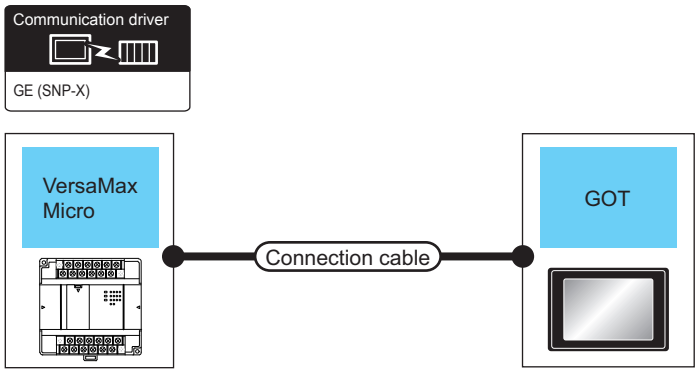

PLC		Connection cable		GOT		Number of connectable equipment
Model name	Communication Type	Cable model Connection diagram number	Max. distance	Option device*1	Model	
IC200UAA003 IC200UAR014 IC200UDD104 IC200UDD112 IC200UDR001 IC200UDR002 IC200UDR003	RS-232	User preparing Page 452 RS-232 connection diagram 2)	15m	- (Built into GOT)	GT27 GT25 GT23	1 PLC for 1 GOT
				GT15-RS2-9P	GT27 GT25	
IC200UAL004 IC200UAL005 IC200UAL006 IC200UAA007 IC200UAR028 IC200UDD110 IC200UDD120 IC200UDD212 IC200UDR005 IC200UDR006 IC200UDR010 IC200UDD064 IC200UDD164 IC200UDR164 IC200UDR064	RS-232	User preparing Page 452 RS-232 connection diagram 2)	15m	- (Built into GOT)	GT27 GT25 GT23	
				GT15-RS2-9P	GT27 GT25	

*1 GT25-W, GT2505-V does not support the option device.

For the RS-422 connection

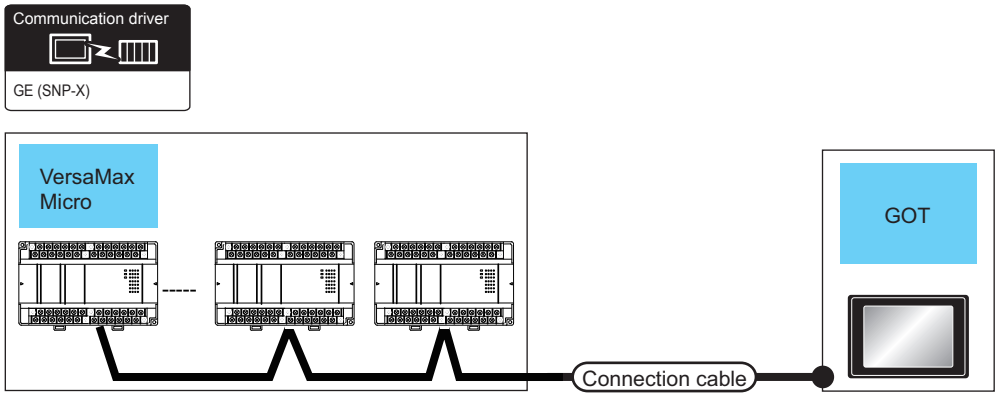

PLC		Connection cable		GOT		Number of connectable equipment
PLC	Communication Type	Cable model Connection diagram number	Max. distance	Option device*1	Model	
IC200UAL004 IC200UAL005 IC200UAL006 IC200UAA007 IC200UAR028 IC200UDD110 IC200UDD120 IC200UDD212 IC200UDR005 IC200UDR006 IC200UDR010 IC200UDD064 IC200UDD164 IC200UDR164 IC200UDR064	RS-422	User preparing Page 454 RS-422 connection diagram 3)	1200m	- (Built into GOT)	GT27 GT25 GT23	Up to 8 PLCs for 1 GOT
				GT15-RS4-9S	GT27 GT25	

*1 GT25-W, GT2505-V does not support the option device.

12.3 Connection Diagram

The following diagram shows the connection between the GOT and the PLC.

RS-232 cable

Connection diagram

■RS-232 connection diagram 1)

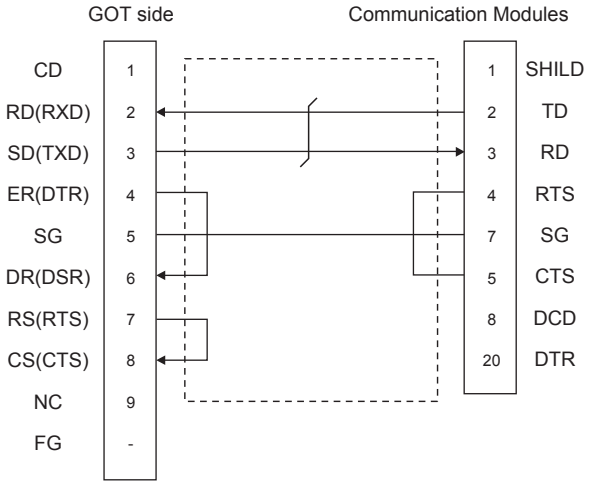

■RS-232 connection diagram 2)

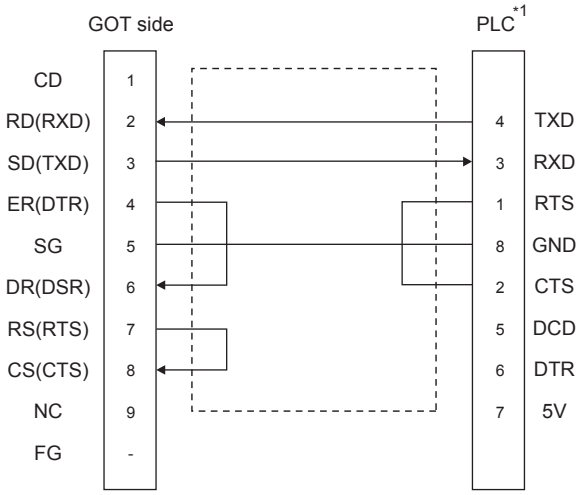

*1 For details of the pin assignment, refer to the following manual.
GE PLC user's Manual

Precautions when preparing a cable

■Cable length

The length of the RS-232 cable must be 15m or less.

■GOT side connector

For the GOT side connector, refer to the following.

☞ Page 58 GOT connector specifications

■GE PLC side connector

Use the connector compatible with the GE PLC side module.

For details, refer to the GE PLC user's manual.

RS-422 cable

Connection diagram

■RS-422 connection diagram 1)

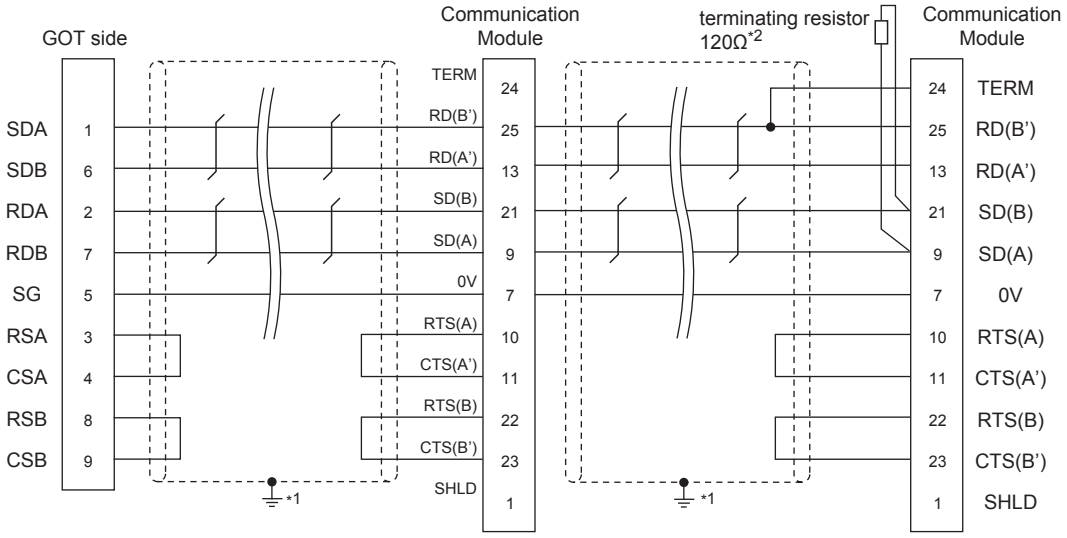

*1 Connect FG grounding to the appropriate part of a cable shield line.

*2 A terminating resistor should be connected to communication module at a terminal station.

■RS-422 connection diagram 2)

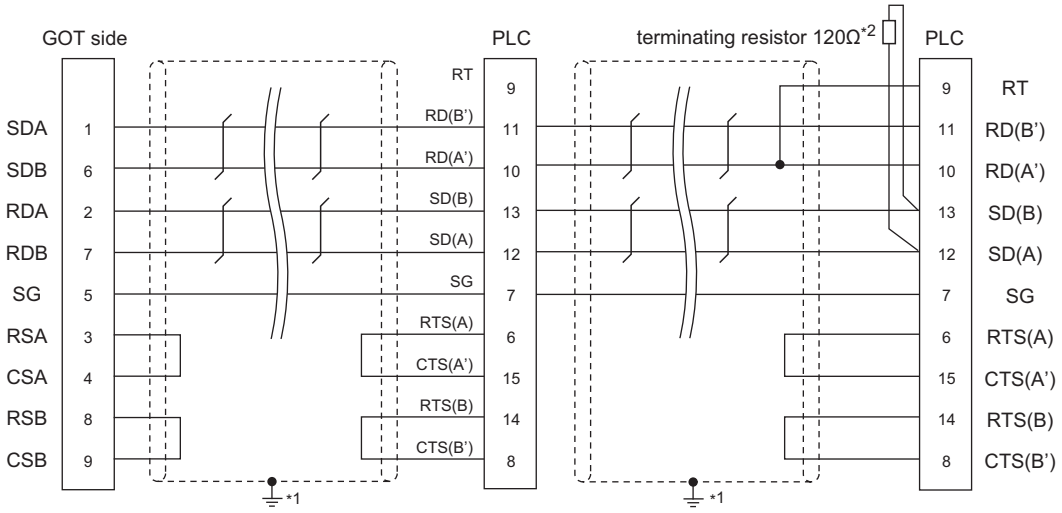

*1 Connect FG grounding to the appropriate part of a cable shield line.

*2 Terminating resistor should be provided for a PLC which will be a terminal.

■RS-422 connection diagram 3)

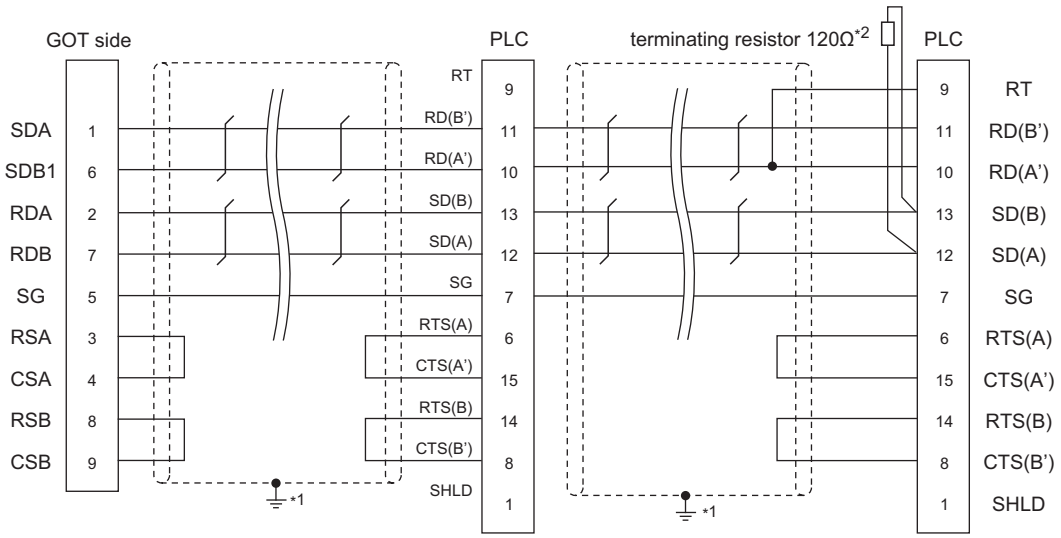

*1 Connect FG grounding to the appropriate part of a cable shield line.
*2 Terminating resistor should be provided for a PLC which will be a terminal.

Precautions when preparing a cable

■Cable length

The length of the RS-422 cable must be 1200m or less.

■GOT side connector

For the GOT side connector, refer to the following.

☞ Page 58 GOT connector specifications

■GE PLC side connector

Use the connector compatible with the GE PLC side module.

For details, refer to the GE PLC user's manual.

Connecting terminating resistors

■GOT side

• For GT27, GT25(Except GT2505-V) ,GT23

Set the terminating resistor setting switch of the GOT main unit to "Disable".

• For GT2505-V

Set the terminating resistor selector to "330Ω".

For the procedure to set the terminating resistor, refer to the following.

☞ Page 62 Terminating resistors of GOT

■GE PLC side

When connecting a GE PLC to the GOT, a terminating resistor must be connected.

📖GE PLC user's Manual

12.4 GOT Side Settings

Setting the communication interface (Controller setting)

Set the channel of the connected equipment.

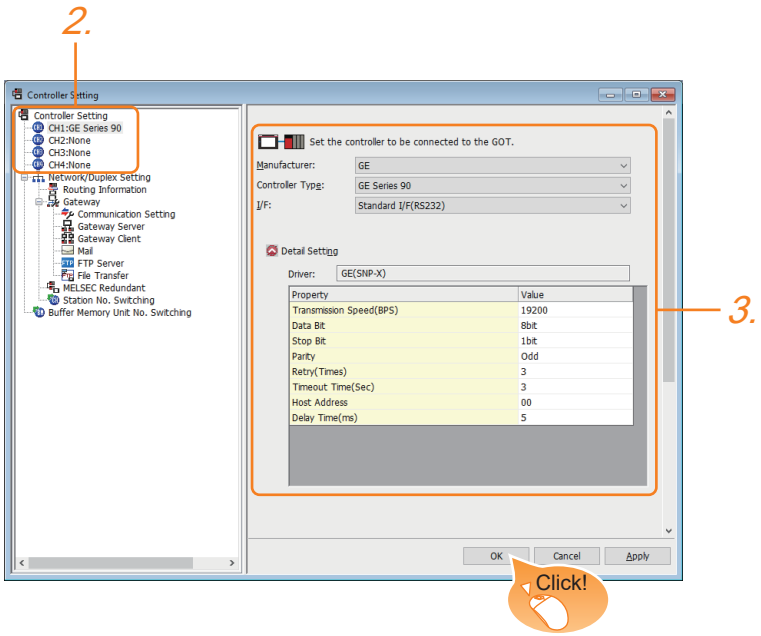

1. Select [Common] → [Controller Setting] from the menu.

2. In the [Controller Setting] window, select the channel No. to be used from the list menu.

3. Set the following items.

- [Manufacturer]: [GE]
- [Controller Type]: [GE Series 90]
- [I/F]: Interface to be used
- [Detail Setting]: Configure the settings according to the usage environment.

☞ Page 456 Communication detail settings

4. When you have completed the settings, click the [OK] button.

Point

The settings of connecting equipment can be confirmed in [I/F Communication Setting].
For details, refer to the following.
☞ Page 48 I/F communication setting

Communication detail settings

Make the settings according to the usage environment.

GE (SNP-X)

Property	Value
Transmission Speed(BPS)	19200
Data Bit	8 bit
Stop Bit	1 bit
Parity	Odd
Retry(Times)	3
Timeout Time(Sec)	3
Host Address	00
Delay Time(ms)	5

Item	Description	Range
Transmission Speed	Set this item when change the transmission speed used for communication with the connected equipment. (Default: 19200bps)	9600bps, 19200bps, 38400bps, 57600bps, 115200bps
Data Bit*1	Set this item when change the data length used for communication with the connected equipment. (Default: 8bits)	7bits/8bits
Stop Bit	Specify the stop bit length for communications. (Default: 1bit)	1bit/2bits
Parity	Specify whether or not to perform a parity check, and how it is performed during communication. (Default: Odd)	None Even Odd
Retry	Set the number of retries to be performed when a communication error occurs. (Default: 3times)	0 to 5times
Timeout Time	Set the time period for a communication to time out. (Default: 3sec)	1 to 30sec
Host Address	Specify the host address (station No. of the GOT to which the PLC is connected) in the connected network. (Default: 00)	00 to 31
Delay Time	Set this item to adjust the transmission timing of the communication request from the GOT. (Default: 5ms)	0 to 300ms

*1 If no setting is provided for the data length for the controller, set "8 bits".
If the setting is provided for the data length for the controller, set the same set value for the data length for the GOT as that for the PLC.

Point

• Communication interface setting by the Utility

The communication interface setting can be changed on the Utility's [Communication setting] after writing [Communication Settings] of project data.

For details on the Utility, refer to the following manual.

GOT2000 Series User's Manual (Utility)

• Precedence in communication settings

When settings are made by GT Designer3 or the Utility, the latest setting is effective.

12.5 PLC Side Setting

Point

GE PLC

For details of GE PLCs, refer to the following manuals.

GE PLC user's Manual

Model name		Refer to
PLC CPU	Series 90-30	Page 457 Connecting to Series 90-30
	VersaMaxMicro	Page 458 Connecting to VersaMaxMicro
Communication Modules	IC693CMM311	Page 458 Connecting to IC693CMM311
	IC697CMM711	Page 459 Connecting to IC697CMM711

Connecting to Series 90-30

Communication settings

Make the communication settings using the engineering tool.

When making the settings, set [Configuration Mode] on the [Setting] tab of the engineering tool to "SNP only".

Setting item	PLC side setting
Port Mode*1	SNP
Port Type*2	Slave
Data Rate	9600bps, 19200bps
Flow Control	NONE
Parity	EVEN, ODD, NONE
Stop Bits	1bit, 2bits
Timeout*3	Long
Turn Around Delay*4	0
SNP ID*5	00 to 31
Converter Power Consumption*6	0

*1 Set to SNP.

*2 Set to Slave.

*3 Set to Long.

*4 Set to 0.

*5 Set within the range of 00 to 31.
When specifying the station No. from 0 to 9, add "0" before the number and set it as 00 to 09.

*6 Set to 0.(only when connecting to Port2)

Connecting to VersaMaxMicro

Communication settings

Make the communication settings using the engineering tool.

Setting item	PLC side setting
Data Rate	9600bps, 19200bps, 38400bps
Bits / Character*6	7bits, 8bits
Parity	EVEN, ODD, NONE
Stop Bits	1bit, 2bits
Port Mode*1	SNP
Port Type*2	Slave
Flow Control	NONE
Timeout*3	Long
Turn Around Delay*4	0
SNP ID*5	00 to 31

*1 Set to the SNP protocol.
*2 Set to Slave.
*3 Set to Long.
*4 Set to 0.
*5 Set within the range of 00 to 31.
When specifying the station No. from 0 to 9, add "0" before the number and set it as 00 to 09.
*6 Set the same set value for the data length for the GOT and PLC.

Connecting to IC693CMM311

Communication settings

Make the communication settings using the engineering tool.

When making the settings, set [Configuration Mode] on the [Setting] tab of the engineering tool to "SNP only".

Setting item	PLC side setting
SNP Enable*1	YES
SNP Mode*2	Slave
Interface*3	RS232, RS485
Data Rate	9600bps, 19200bps
Parity	ODD, NONE, EVEN
Stop Bits	1bit, 2bits
Flow Control*4	NONE
Turn Around Delay*5	NONE
Timeout*6	Long

*1 Set to YES.
*2 Set to SLAVE.
*3 Set the communication format to be used.
(only when connecting to Port2)
*4 Set to NONE.
*5 Set to NONE.
*6 Set to LONG.

Connecting to IC697CMM711

Communication settings

Make the communication settings using the engineering tool.

When making the settings, set [Configuration Mode] on the [Setting] tab of the engineering tool to "SNP only".

Setting item	PLC side setting
SNP Enable*1	YES
SNP Mode*2	Slave
Interface*3	RS232, RS485
Data Rate	9600bps, 19200bps
Parity	ODD, NONE, EVEN
Stop Bits	1bit, 2bits
Flow Control*4	NONE
Turn Around Delay*5	NONE
Timeout*6	Long

*1 Set to YES.
*2 Set to SLAVE.
*3 Set the communication format to be used.
(only when connecting to Port2)
*4 Set to NONE.
*5 Set to NONE.
*6 Set to LONG.

Station number setting

Set each station number so that no station number overlaps.

The station number can be set without regard to the cable connection order. There is no problem even if station numbers are not consecutive.

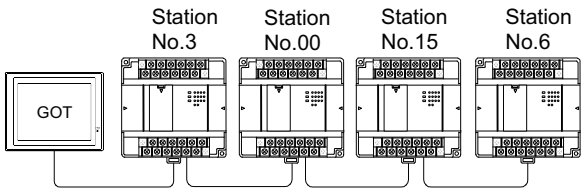

Examples of station number setting

Direct specification

Specify the station No. of the PLC to be changed when setting device.

Specification range
00 to 31

Point

PLC Station No. settings

Make sure to set a 2-digit number for the station No. of the PLC to be monitored by the GOT.

12.6 Settable Device Range

For the device setting dialog and range of devices usable in the GOT, refer to the following.

☞ Page 624 GE equipment ([GE Series 90])

12.7 Precautions

GOT clock control

The PLC clock data cannot be written to or read from the GOT.

The settings of "time adjusting" or "time broadcast" made on the GOT will be disabled on the PLC.

13 LS INDUSTRIAL SYSTEMS PLC

- Page 461 Connectable Model List
- Page 462 Serial Connection
- Page 476 Ethernet Connection
- Page 485 Settable Device Range

13.1 Connectable Model List

The following table shows the connectable models.

Series		Model name	Clock	Communication Type	Connectable model	Refer to
MASTER-K	K80S	K7M-D□□□S(/DC)	○	RS-232 RS-422	GT27 GT25 GT23 GT21 GS	☞ Page 462 Connecting to K80S or K120S
	K120S	K7M-D□□□U				
	K200S	K3P-07□S	○	RS-232 RS-422	GT27 GT25 GT23 GT21 GS	☞ Page 465 Connecting to K200S
	K300S	K4P-15AS	○	RS-232 RS-422	GT27 GT25 GT23 GT21 GS	☞ Page 467 Connecting to K300S
XGT	XGK	XGK-CPUU XGK-CPUH XGK-CPUA XGK-CPUS XGK-CPUE XGK-CPUUN XGK-CPUHN XGK-CPUSN	○	Ethernet	GT27 GT25 GT23 GT21 GS	☞ Page 476 Connecting to XGK

13.2 Serial Connection

Connecting to K80S or K120S

When connecting to one PLC

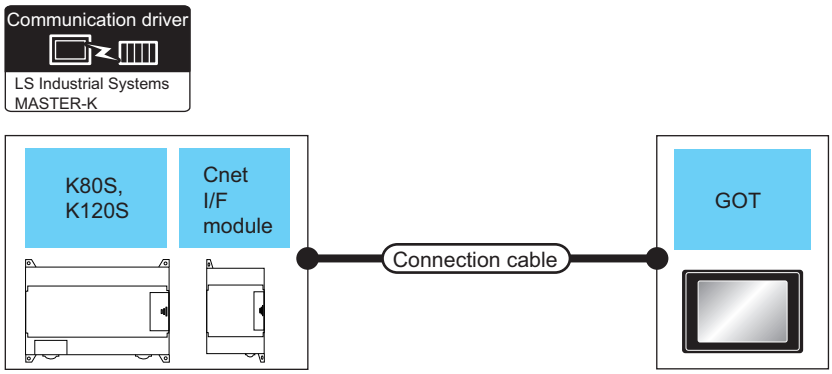

PLC			Connection cable		GOT		Number of connectable equipment
Series	Cnet I/F module*1	Communication Type	Cable model Connection diagram number	Max. distance	Option device*3	Model	
K80S K120S	-	RS-232	User preparing Page 469 RS-232 connection diagram 1)	15m	- (Built into GOT)	GT27 GT25 GT23 GT21(07W) GT21(05Q) GS	1 PLC for 1 GOT
					GT15-RS2-9P	GT27 GT25	
					GT10-C02H-6PT9P*2	GT03P-21(04P)R4 GT03P-21(04P)R2	
			User preparing Page 469 RS-232 connection diagram 3)	same as above	- (Built into GOT)	GT04R-21 GT03P-21(04P)R2	
	G7L-CUEB	RS-232	User preparing Page 469 RS-232 connection diagram 2)	15m	- (Built into GOT)	GT27 GT25 GT23 GT21(07W) GT21(05Q) GS	
					GT15-RS2-9P	GT27 GT25	
					GT10-C02H-6PT9P*2	GT03P-21(04P)R4 GT03P-21(04P)R2	
			User preparing Page 470 RS-232 connection diagram 4)	same as above	- (Built into GOT)	GT04R-21 GT03P-21(04P)R2	

*1 Product manufactured by LS Industrial Systems Co., Ltd. For details of the product, contact LS Industrial Systems Co.,Ltd.
*2 When a GT10-C02H-6PT9P unit of the sub version A or B is used, do not ground the case of the D-sub (9-pin) connector.
*3 GT25-W, GT2505-V does not support the option device.

When connecting to multiple PLCs

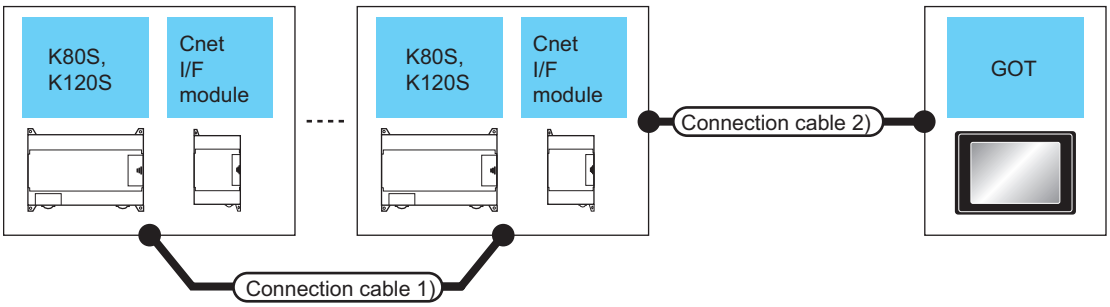

PLC	Connection cable 1)	Cnet I/F module*1		Connection cable 2)	Max. distance	GOT		Number of connectable equipment
Series	Cable model Connection diagram number	Model name	Communication Type	Cable model Connection diagram number		Option device*3	Model	
K80S K120S	User preparing Page 471 RS-422 connection diagram 2)	G7L-CUEC	RS-422	User preparing Page 471 RS-422 connection diagram 1)	500m*2	- (Built into GOT)	GT27 GT25 GT23 GT21(07W) GT21(05Q) GS	31 PLCs for 1 GOT *4
						GT15-RS4-9S	GT27 GT25	
						GT10-C02H-9SC	GT21(04R) GT2(03P,04P R4)	
				User preparing Page 471 RS-422 connection diagram 3)	500m*2	- (Built into GOT)	GT21(04R) GT2(03P,04P ET/R4) GT2(03P,04P R4)	

*1 Product manufactured by LS Industrial Systems Co., Ltd.For details of the product, contact LS Industrial Systems Co.,Ltd.
*2 The total length of the connection cable 1) + connection cable 2)
*3 GT25-W, GT2505-V does not support the option device.
*4 Up to 10 PLCs can be connected to GS21-W.

Connecting to K200S

When connecting to one PLC

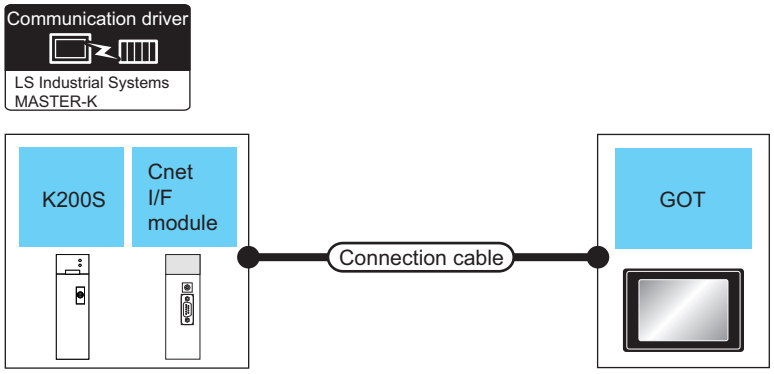

PLC			Connection cable		GOT		Number of connectable equipment
Series	Cnet I/F module*1	Communication Type	Cable model Connection diagram number	Max. distance	Option device*3	Model	
K200S	G6L-CUEB	RS-232	User preparing Page 469 RS-232 connection diagram 2)	15m	- (Built into GOT)	GT27 GT25 GT23 GT21 GT21 GS	1 PLC for 1 GOT
					GT15-RS2-9P	GT27 GT25	
					GT10-C02H-6PT9P*2	GT21 GT21	
			User preparing Page 470 RS-232 connection diagram 4)	15m	- (Built into GOT)	GT21 GT21	

*1 Product manufactured by LS Industrial Systems Co., Ltd.For details of the product, contact LS Industrial Systems Co.,Ltd.
*2 When a GT10-C02H-6PT9P unit of the sub version A or B is used, do not ground the case of the D-sub (9-pin) connector.
*3 GT25-W, GT2505-V does not support the option device.

When connecting to multiple PLCs

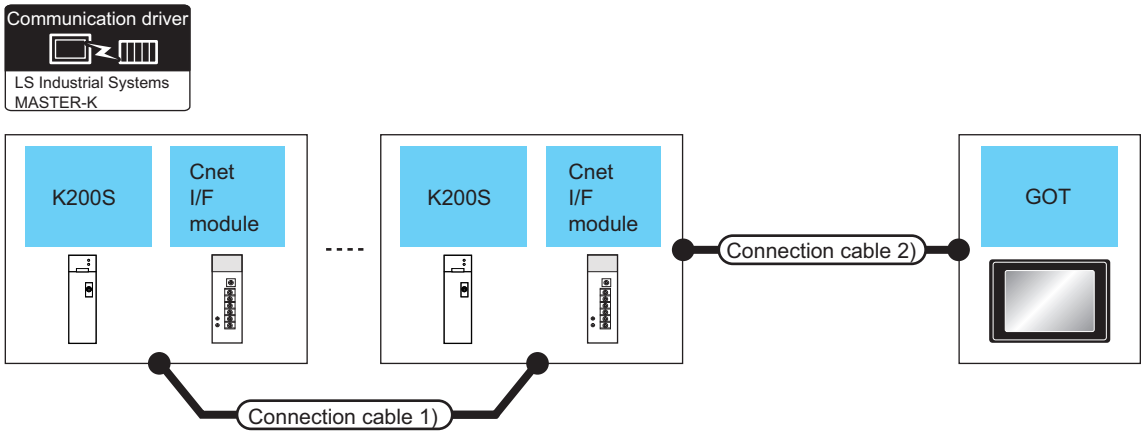

PLC	Connection cable 1)	Cnet I/F module*1		Connection cable 2)	Max. distance	GOT		Number of connectable equipment
Series	Cable model Connection diagram number	Model name	Communication Type	Cable model Connection diagram number		Option device*3	Model	
K200S	User preparing Page 471 RS-422 connection diagram 2)	G6L-CUEC	RS-422	User preparing Page 471 RS-422 connection diagram 1)	500m*2	- (Built into GOT)	GT27 GT25 GT23 GT21 GT21 GS	31 PLCs for 1 GOT *4
						GT15-RS4-9S	GT27 GT25	
						GT10-C02H-9SC	GT21 GT2	
				User preparing Page 471 RS-422 connection diagram 3)	500m*2	- (Built into GOT)	GT21 GT2 GT2	

*1 Product manufactured by LS Industrial Systems Co., Ltd. For details of the product, contact LS Industrial Systems Co.,Ltd.
*2 The total length of the connection cable 1) + connection cable 2)
*3 GT25-W, GT2505-V does not support the option device.
*4 Up to 10 PLCs can be connected to GS21-W.

Connecting to K300S

When connecting to one PLC

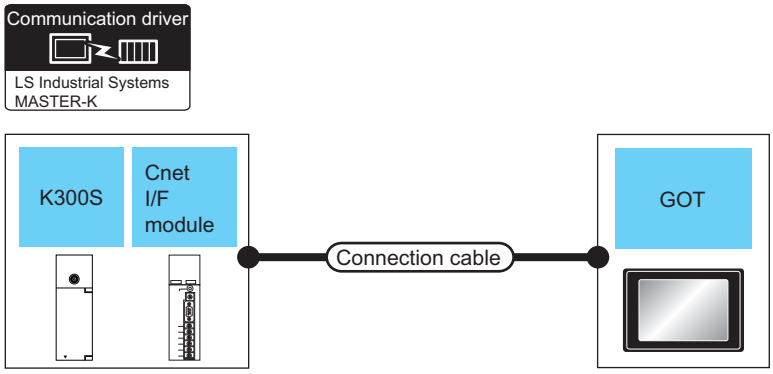

PLC			Connection cable		GOT		Number of connectable equipment
Series	Cnet I/F module*1	Communication Type	Cable model Connection diagram number	Max. distance	Option device*3	Model	
K300S	G4L-CUEA	RS-232	User preparing Page 469 RS-232 connection diagram 2)	15m	- (Built into GOT)	GT27 GT25 GT23 GT21(07W) GT21(05Q) GS	1 PLC for 1 GOT
					GT15-RS2-9P	GT27 GT25	
					GT10-C02H-6PT9P*2	GT21(03P 104P R4) GT21(03P 104P R2)	
			User preparing Page 470 RS-232 connection diagram 4)	15m	- (Built into GOT)	GT21(04R) GT21(03P 104P R2)	

*1 Product manufactured by LS Industrial Systems Co., Ltd. For details of the product, contact LS Industrial Systems Co.,Ltd.
*2 When a GT10-C02H-6PT9P unit of the sub version A or B is used, do not ground the case of the D-sub (9-pin) connector.
*3 GT25-W, GT2505-V does not support the option device.

When connecting to multiple PLCs

Communication driver

LS Industrial Systems
MASTER-K

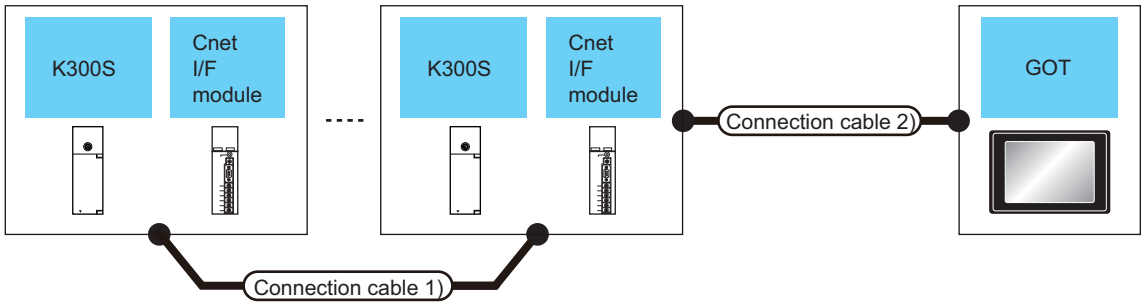

PLC	Connection cable 1)	Cnet I/F module*1		Connection cable 2)	Max. distance	GOT		Number of connectable equipment
Series	Cable model Connection diagram number	Cnet I/F module*1	Communication Type	Cable model Connection diagram number		Option device*3	Model	
K300S	User preparing Page 471 RS-422 connection diagram 2)	G4L-CUEA	RS-422	User preparing Page 471 RS-422 connection diagram 1)	500m*2	- (Built into GOT)	GT27 GT25 GT23 GT21(07W) GT21(05Q) GS	31 PLCs for 1 GOT *4
						GT15-RS4-9S	GT27 GT25	
						GT10-C02H-9SC	GT21(04R) GT21(03P 04P R4)	
				User preparing Page 471 RS-422 connection diagram 3)	500m*2	- (Built into GOT)	GT21(04R) GT21(03P 04P ET/R4) GT21(03P 04P R4)	

*1 Product manufactured by LS Industrial Systems Co., Ltd. For details of the product, contact LS Industrial Systems Co.,Ltd.
*2 The total length of the connection cable 1) + connection cable 2)
*3 GT25-W, GT2505-V does not support the option device.
*4 Up to 10 PLCs can be connected to GS21-W.

Connection Diagram

The following diagram shows the connection between the GOT and the PLC.

RS-232 cable

■RS-232 connection diagram 1)

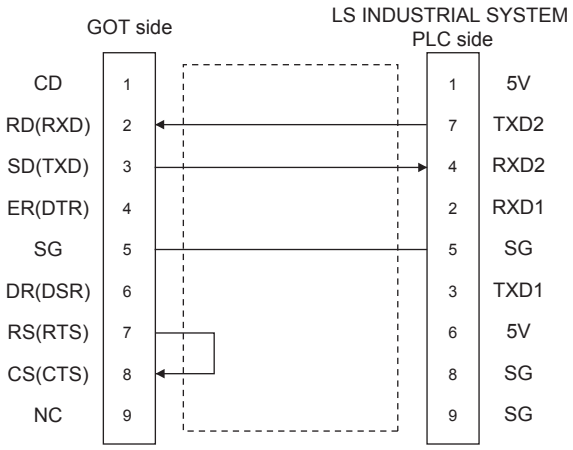

■RS-232 connection diagram 2)

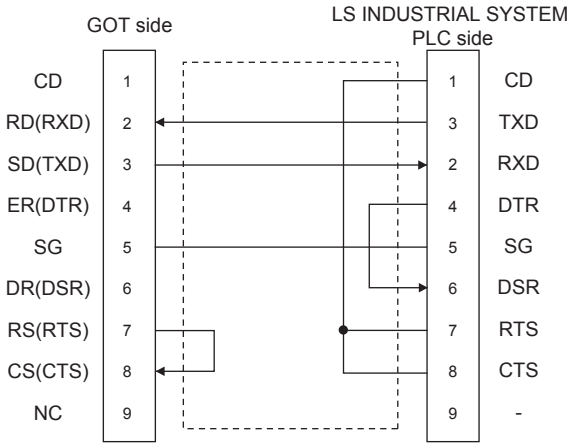

■RS-232 connection diagram 3)

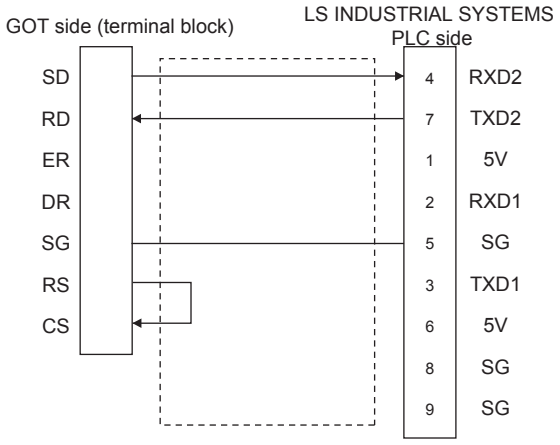

■RS-232 connection diagram 4)

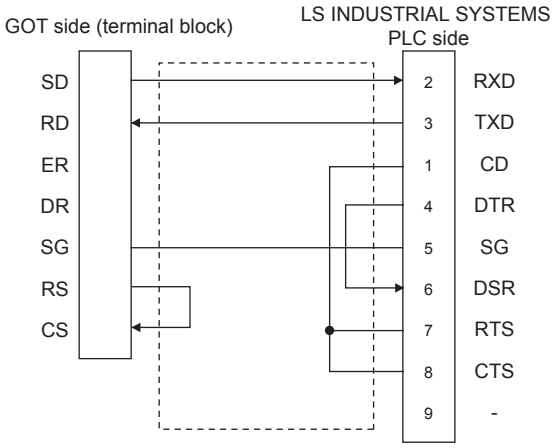

■Precautions when preparing a cable

• Cable length

The length of the RS-232 cable must be 15m or less.

• GOT side connector

For the GOT side connector, refer to the following.

☞ Page 58 GOT connector specifications

• LS INDUSTRIAL SYSTEMS PLC side connector

Use the connector compatible with the LS INDUSTRIAL SYSTEMS PLC side module.

For details, refer to the user's manual of the LS INDUSTRIAL SYSTEMS PLC.

RS-422 cable

■RS-422 connection diagram 1)

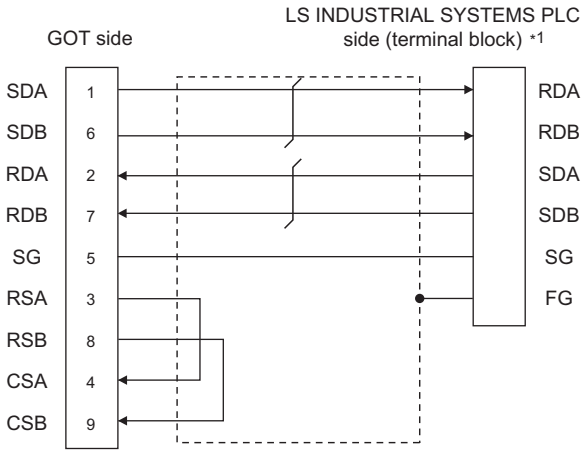

*1 For the system terminal, connect a 120Ω (1/2W) terminating resistor across RDA and RDB, and across SDA and SDB respectively.

■RS-422 connection diagram 2)

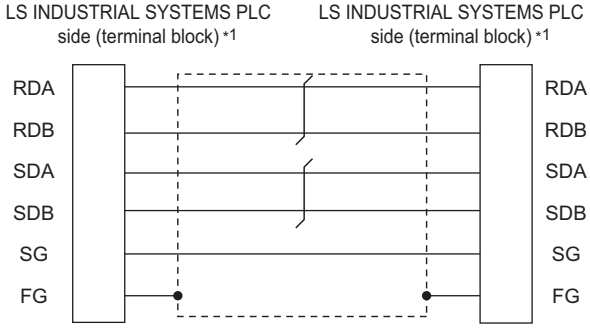

*1 For the system terminal, connect a 120Ω (1/2W) terminating resistor across RDA and RDB, and across SDA and SDB respectively.

■RS-422 connection diagram 3)

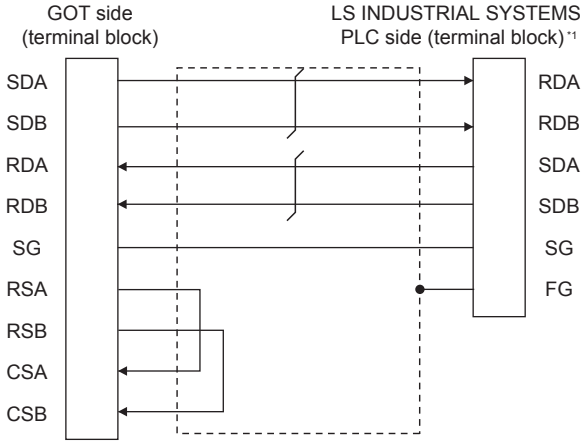

*1 For the system terminal, connect a 120Ω (1/2W) terminating resistor across RDA and RDB, and across SDA and SDB respectively.

■Precautions when preparing a cable

• Cable length

The length of the RS-422 cable must be 500m or less.

• GOT side connector

For the GOT side connector, refer to the following.

☞ Page 58 GOT connector specifications

• LS INDUSTRIAL SYSTEMS PLC side connector

Use the connector compatible with the LS INDUSTRIAL SYSTEMS PLC side module.

For details, refer to the user's manual of the LS INDUSTRIAL SYSTEMS PLC.

■Connecting terminating resistors

• GOT side

When connecting a PLC to the GOT, a terminating resistor must be connected to the GOT.

◇For GT27, GT25(Except GT2505-V), GT23

Set the terminating resistor setting switch of the GOT main unit to disable.

◇For GT2505-V, GT21, and GS21-W-N

Set the terminating resistor selector to 330 Ω.

◇For GS21-W

Since the terminating resistor is fixed to 330 Ω, no setting is required for the terminating resistor.

For the procedure to set the terminating resistor, refer to the following.

☞ Page 62 Terminating resistors of GOT

• LS INDUSTRIAL SYSTEMS PLC side

When connecting an LS INDUSTRIAL SYSTEMS PLC to the GOT, a terminating resistor must be connected.

☞ Page 471 RS-422 cable

Setting the communication interface (Controller setting)

Set the channel of the connected equipment.

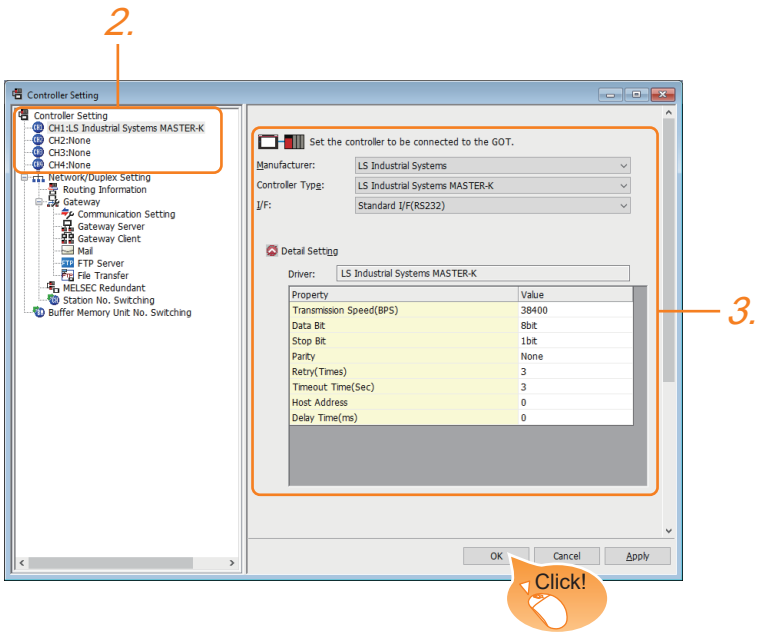

1. Select [Common] → [Controller Setting] from the menu.

2. In the [Controller Setting] window, select the channel No. to be used from the list menu.

3. Set the following items.

- [Manufacturer]: [LS Industrial Systems]
- [Controller Type]: [LS Industrial Systems MASTER-K]
- [I/F]: Interface to be used
- [Detail Setting]: Configure the settings according to the usage environment.

☞ Page 474 Communication detail settings

4. When you have completed the settings, click the [OK] button.

Point

The settings of connecting equipment can be confirmed in [I/F Communication Setting].
For details, refer to the following.
☞ Page 48 I/F communication setting

Communication detail settings

Make the settings according to the usage environment.

Property	Value
Transmission Speed(BPS)	38400
Data Bit	8 bit
Stop Bit	1 bit
Parity	None
Retry(Times)	3
Timeout Time(Sec)	3
Host Address	0
Delay Time(ms)	0

Item	Description	Range
Transmission Speed	Set this item when change the transmission speed used for communication with the connected equipment. (Default: 38400bps)	9600bps, 19200bps, 38400bps, 57600bps, 115200bps
Data Bit	Set this item when change the data length used for communication with the connected equipment. (Default: 8bits)	7bits/8bits
Stop Bit	Specify the stop bit length for communications. (Default: 1bit)	1bit/2bits
Parity	Specify whether or not to perform a parity check, and how it is performed during communication. (Default: None)	None Even Odd
Retry	Set the number of retries to be performed when a communication error occurs. (Default: 3times)	0 to 5times
Timeout Time	Set the time period for a communication to time out. (Default: 3sec)	3 to 30sec
Host Address	Specify the host address (station No. of the PLC to which the GOT is connected) in the network of the GOT. (Default: 0)	0 to 31
Delay Time	Set this item to adjust the transmission timing of the communication request from the GOT. (Default: 0ms)	0 to 300 (ms)

Point

• Communication interface setting by the Utility

The communication interface setting can be changed on the Utility's [Communication setting] after writing [Communication Settings] of project data.

For details on the Utility, refer to the following manual.

GOT2000 Series User's Manual (Utility)

• Precedence in communication settings

When settings are made by GT Designer3 or the Utility, the latest setting is effective.

PLC Side Setting

Point

LS INDUSTRIAL SYSTEMS PLC

For details of LS INDUSTRIAL SYSTEMS PLCs, refer to the following manual.

User's Manual of the LS INDUSTRIAL SYSTEMS PLC

Model name		Refer to
PLC CPU	K80S K120S	☞ Page 475 Connecting to PLC CPU
	K200S	
	K300S	
Cnet I/F module	G7L-CUEB	☞ Page 475 Connecting to Cnet I/F module
	G7L-CUEC	
	G6L-CUEB	
	G6L-CUEC	
	G4L-CUEA	

Connecting to PLC CPU

■Settings of the communication specifications

There is no item to be set using the hardware.

Set the items using the engineering software for MASTER-K.

Item	Setting details
Station No.	0 to 31
Communication speed	1200, 2400, 4800, 9600, 19200, 38400, 57600bps
Data bit	7 or 8
Parity bit	None, Even, Odd
Stop bit	1 or 2

*1 For the setting method of the engineering software, refer to the following.
User's Manual of the LS INDUSTRIAL SYSTEMS PLC

Connecting to Cnet I/F module

■Settings of the communication specifications

There is no item to be set using the hardware.

Set the items using the engineering software for MASTER-K.

Item		Setting details
Communication protocol		Dedicated protocol
Communication format	Data bit	7 or 8
	Stop bit	1 or 2
	Start bit	1
	Parity bit	Even/Odd/None
Channel selection		Stand-alone mode/Interlocking mode
Synchronization		Asynchronous
Transmission speed (bps)	RS-232C	300/600/1200/2400/4800/9600/19200/38400
	RS-422/485	300/600/1200/2400/4800/9600/19200/38400/76800

*1 For the setting method of the engineering software, refer to the following.
User's Manual of the LS INDUSTRIAL SYSTEMS PLC

13.3 Ethernet Connection

Connecting to XGK

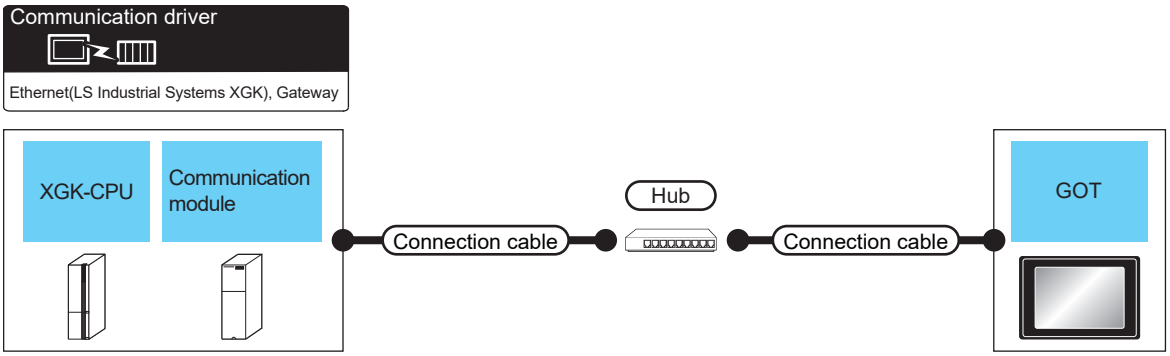

PLC		Connection cable		GOT		Number of connectable equipment
Model name	Communication module *1*2	Cable model *3	Maximum segment length *4	Option device *5	Model	
XGK-CPUU XGK-CPUH XGK-CPUA XGK-CPUS XGK-CPUE	XGL-EFMT(B)	• 100BASE-TX Shielded twisted pair cable (STP) or unshielded twisted pair cable (UTP) of category 5 or higher • 10BASE-T Shielded twisted pair cable (STP) or unshielded twisted pair cable (UTP) of category 3 or higher	100m	- (Built into GOT)	GT27 GT25 GT23 GT21 GT2104R GT2103P GT2104P ET/R4 GS	• 63 PLCs or less for 1 GOT • 16 GOTs or less for 1 XGL-EFMT(B) when connecting to the communication module*6 • 4 GOTs or less for 1 XGK-CPU when connecting to the Ethernet port built in the CPU*6
				GT25-J71E71-100	GT27 GT25	
XGK-CPUUN XGK-CPUHN XGK-CPUSN	XGL-EFMT(B)			- (Built into GOT)	GT27 GT25 GT23 GT21 GT2104R GT2103P GT2104P ET/R4 GS	
				GT25-J71E71-100	GT27 GT25	
	-(Ethernet port built in the CPU)			- (Built into GOT)	GT27 GT25 GT23 GT21 GT2104R GT2103P GT2104P ET/R4 GS	
				GT25-J71E71-100	GT27 GT25	

*1 Product manufactured by LS Industrial Systems Co., Ltd. For details of the product, contact LS Industrial Systems Co.,Ltd.

*2 Select one of the following for [Unit Type] in [Connected Ethernet Controller Setting] of GT Designer3.
- When connecting to the communication module: [XGL-EFMT(B)]
- When connecting to the Ethernet port built in the CPU: [XGK-CPU]

For [Connected Ethernet Controller Setting] of GT Designer3, refer to the following.
☞ Page 481 Connected Ethernet controller setting

*3 The destination connected with the twisted pair cable varies with the configuration of the applicable Ethernet network system.
Connect to the Ethernet module, hub, transceiver or other system equipment corresponding to the applicable Ethernet network system.
Use cables, connectors, and hubs that meet the IEEE802.3 10BASE-T/100BASE-TX standards.
To connect the target device and hub, use a cable according to the target device configuration

*4 A length between a hub and a node.
The maximum distance differs depending on the Ethernet device to be used.
The following shows the number of the connectable nodes when a repeater hub is used.
• 10BASE-T: Max. 4 nodes for a cascade connection (500m)
• 100BASE-TX: Max. 2 nodes for a cascade connection (205m)
When switching hubs are used, the cascade connection between the switching hubs has no logical limit for the number of cascades.
For the limit, contact the switching hub manufacturer.

*5 GT25-W, GT2505-V does not support the option device.

*6 Set the number of connected GOTs in the engineering software for the PLC.
☞ Page 483 PLC Side Setting

GOT side settings

Setting communication interface (Communication settings)

Set the channel of the connected equipment.

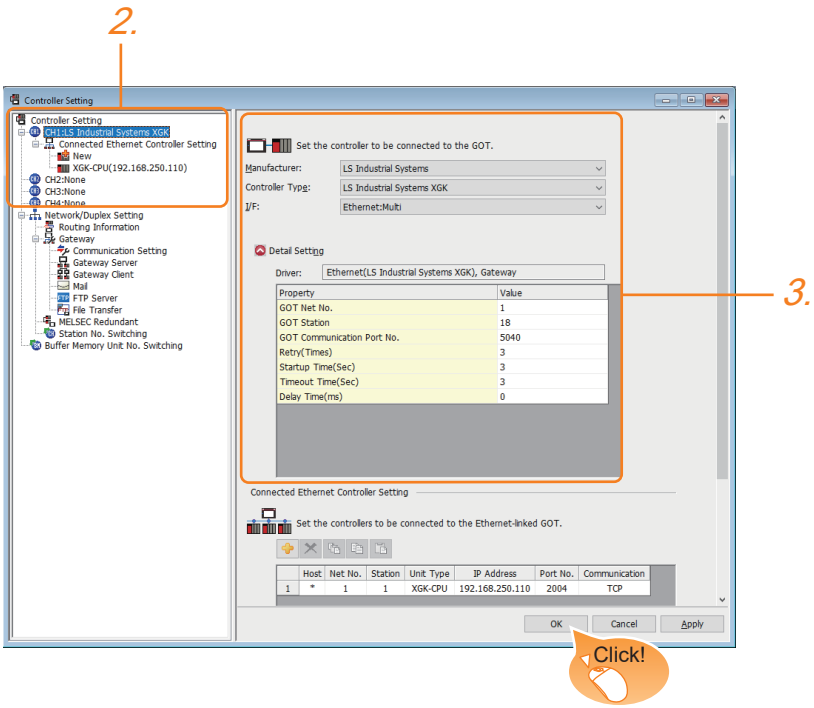

1. Select [Common] → [Controller Setting] from the menu.

2. In the [Controller Setting] window, select the channel No. to be used from the list menu.

3. Set the following items.

- [Manufacturer]: [LS Industrial Systems]
- [Controller Type]: [LS Industrial Systems XGK]
- [I/F]: [Ethernet: Multi]
- [Detail Setting]: Configure the settings according to the usage environment.

☞ Page 479 Communication detail settings

4. When you have completed the setting, click the [OK] button.

Point

The settings of connecting equipment can be confirmed in [I/F Communication Setting].
For details, refer to the following.
☞ Page 48 I/F communication setting

Communication detail settings

Make the settings according to the usage environment.

Property	Value
GOT Net No.	1
GOT Station	18
GOT Communication Port No.	5040
Retry(Times)	3
Startup Time(Sec)	3
Timeout Time(Sec)	3
Delay Time(ms)	0

Item	Description	Range
GOT Net No.	Set the network No. of the GOT. (Default: 1)	1 to 239
GOT Station *1	Set the station No. of the GOT. (Default: 18)	1 to 64
GOT Communication Port No.	Set the GOT port No. for the connection with the Ethernet equipment. (Default: 5040 *2)	1024 to 5010, 5014 to 49152, 49171 to 65534
Retry	Set the number of retries to be performed when a communication timeout occurs. When receiving no response after retries, the communication times out. (Default: 3times)	0 to 5times
Startup Time	Specify the time period from the GOT startup until GOT starts the communication with the PLC CPU. (Default: 3sec)	3 to 255sec
Timeout Time	Set the time period for a communication to time out. (Default: 3sec)	1 to 90sec
Delay Time	Set the delay time for reducing the load of the network/destination PLC. (Default: 0ms)	0 to 10000(ms)

*1 Set different values for [GOT Station] of [Detail Setting] and [Station] of [Connected Ethernet Controller Setting].
☞ Page 481 Connected Ethernet controller setting

*2 When assigning the same driver to the multiple channels, in the communication drivers set as the second and following, the default value of [GOT Communication Port No.] becomes the earliest number in the vacant numbers of No. 6000 and later.

Point

• Communication interface setting by the Utility

The communication interface setting can be changed on the Utility's [Communication Settings] after writing [Communication Settings] of project data.

For details on the Utility, refer to the following manual.

GOT2000 Series User's Manual (Utility)

• Precedence in communication settings

When settings are made by GT Designer3 or the Utility, the latest setting is effective.

GOT Ethernet Setting

The GOT can be connected to a different network by configuring the following setting.

■GOT IP address setting

Set the following communication port setting.

- Standard port (When using GT25-W, port 1)
- Extension port (When using GT25-W, port 2)

■GOT Ethernet common setting

Set the following setting which is common to the standard port and the extension port, or port 1 and port 2.

- [Default Gateway]
- [Peripheral S/W Communication Port No.]
- [Transparent Port No.]

■IP filter setting

By configuring the IP filter setting, the access from the specific IP address can be permitted or shut off.

For the detailed settings, refer to the following manual.

☞ Page 44 GOT Ethernet Setting

Connected Ethernet controller setting

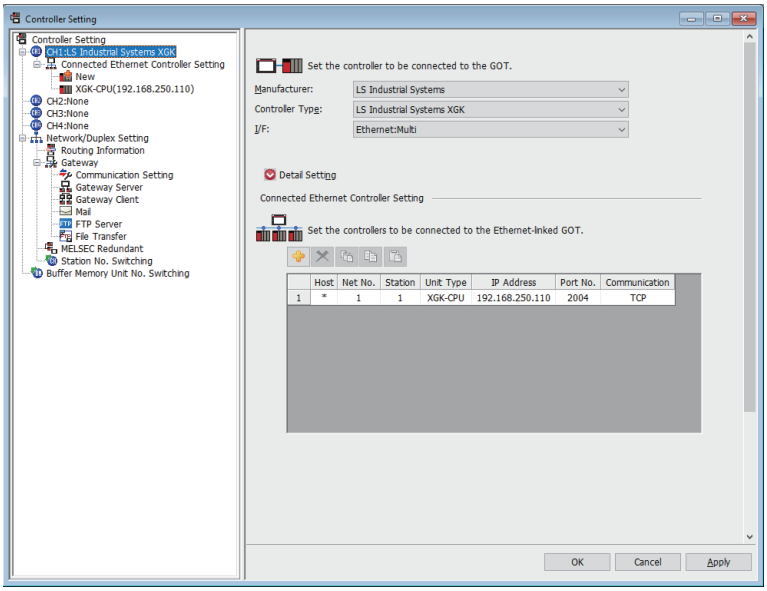

Item	Description	Set value	
		XGK-CPU	XGL-EFMT(B)
Host	The host is displayed. It refers to a station that can be connected without setting a station number. (The host is indicated with an asterisk (*).)	-	
Net No.	Set the network No. of the connected Ethernet equipment. (Default: 1)	1 to 239	
Station *1	Set the station No. of the connected Ethernet equipment. (Default: 1)	1 to 64	
Unit Type	Select one according to the connected unit. When connecting to the Ethernet port built in the CPU: [XGK-CPU] When connecting to the communication module: [XGL-EFMT(B)] (Default: XGK-CPU)	XGK-CPU, XGL-EFMT(B)	
IP address	Set the IP address of the connected Ethernet equipment. (Default: 192.168.250.110)	PLC side IP address	
Port No. *2	Set the port No. of the connected Ethernet equipment. (Default: 2004)	2004	2004 (TPC), 2005 (UDP)
Communication format *2	Select a communication protocol. (Default: TCP)	TCP	TCP, UDP

*1 Set different values for [GOT Station] of [Detail Setting] and [Station] of [Connected Ethernet Controller Setting].
☞ Page 479 Communication detail settings

*2 The setting range depends on the selection for [Unit Type].

Point

[Connected Ethernet Controller Setting] for GT21 and GS21

• Effective range of [Connected Ethernet Controller Setting]

Only [1] to [4] of [Connected Ethernet Controller Setting] can be used for GT21 and GS21.

If [5] onwards are used, the settings are invalid on GT21 and GS21.

• [Host] setting

Set [Host] within the range from [1] to [4] in [Connected Ethernet Controller Setting].

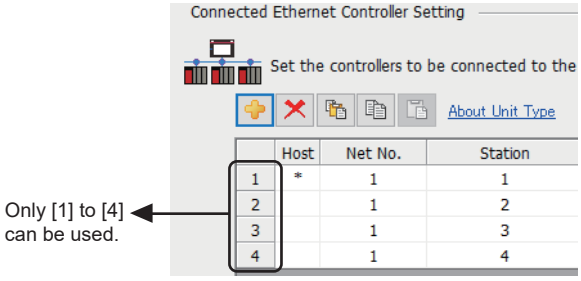

PLC Side Setting

Point

LS INDUSTRIAL SYSTEMS PLC

For details of LS INDUSTRIAL SYSTEMS PLCs, refer to the following manual.

User's Manual of the LS INDUSTRIAL SYSTEMS PLC

Standard settings

Configure the settings in the XGT series engineering software.

Item	Setting details
IP Adress	PLC side IP Adress*1
Reception waiting time	Time period from when communication with the controller stops until when communication is disconnected (Five seconds or longer is recommended.)
Number of Dedicated Connections	Set the number of TCP devices connected to the PLC.
Driver	Select XGT Server.

*1 Adjust the settings with GOT settings.

Page 481 Connected Ethernet controller setting

Precautions

When connecting to multiple GOTs

■Setting Station

When connecting two or more GOTs in the Ethernet network, set each [Station] to the GOT.

☞ Page 478 Setting communication interface (Communication settings)

■Setting IP address

Do not use the IP address "192.168.0.18" when using multiple GOTs with the GOT 1000 series mixed.

A communication error may occur on the GOT with the IP address.

When setting IP address

Do not use "0" and "255" at the end of an IP address.

(Numbers of *.*.*.0 and *.*.*.255 are used by the system.)

The GOT may not monitor the controller correctly with the above numbers.

Consult with the administrator of the network before setting an IP address to the GOT and controller.

When connecting to the multiple network equipment (including GOT) in a segment

By increasing the network load, the transmission speed between the GOT and PLC may be reduced.

The following actions may improve the communication performance.

- Using a switching hub
- More high speed by 100BASE-TX (100Mbps)
- Reduction of the monitoring points on GOT

13.4 Settable Device Range

For the device setting dialog and range of devices usable in the GOT, refer to the following.

☞ Page 627 LS IS equipment ([LS Industrial Systems XGK])
☞ Page 631 LS IS equipment ([LS Industrial Systems MASTER-K])

MEMO

14 MITSUBISHI ELECTRIC INDIA PLC

- Page 487 Connectable Model List
- Page 488 System Configuration
- Page 490 Connection Diagram
- Page 496 GOT Side Settings
- Page 498 PLC Side Settings
- Page 499 Settable Device Range

14.1 Connectable Model List

The following table shows the connectable models.

Series	Model name*1	Clock	Communication Type	Connectable model	Refer to
Nexgenie 1000 PLC	NG16DL	○	RS-232 RS-422 RS-485	GT27 GT25 GT23 GT21 GS *2	☞ Page 488 Connecting to Nexgenie 1000 PLC, Nexgenie 2000 PLUS PLC
	NG16ADL				
	NG14RL				
	NG16DN				
	NG16ADN				
	NG14RN				
Nexgenie 2000 PLUS PLC	P2210	○	RS-232 RS-422 RS-485	GT27 GT25 GT23 GT21 GS *2	☞ Page 488 Connecting to Nexgenie 1000 PLC, Nexgenie 2000 PLUS PLC
	P2211				
	P2213A				
	P2214				

*1 Use the PLC versions listed below.

Model	Applicable Library		Applicable Target	
	Library name	Version	Target name	Version
NG16DL	GOT2000_NG_1000.lib	Ver. 1.0 or later	Installable_Target_Nexgenie_T2.7	Ver. 2.7 or later
NG16ADL				
NG14RL				
NG16DN				
NG16ADN				
NG14RN				
P2210	GOT2000_NG_P2210.lib	Ver. 1.0 or later	Installable_Target_Nexgenie2210_T1.8	Ver. 1.8 or later
P2211				
P2213A	GOT2000_NG_P2213A.lib	Ver. 1.0 or later	Installable_Target_Nexgenie2213A_T1.5	Ver. 1.5 or later
P2214	GOT2000_NG_P2214.lib	Ver. 1.0 or later	Installable_Target_Nexgenie2214_T1.5	Ver. 1.5 or later

*2 For GS21, only GS21-W-N supports the RS-485 connection.

14.2 System Configuration

Connecting to Nexgenie 1000 PLC, Nexgenie 2000 PLUS PLC

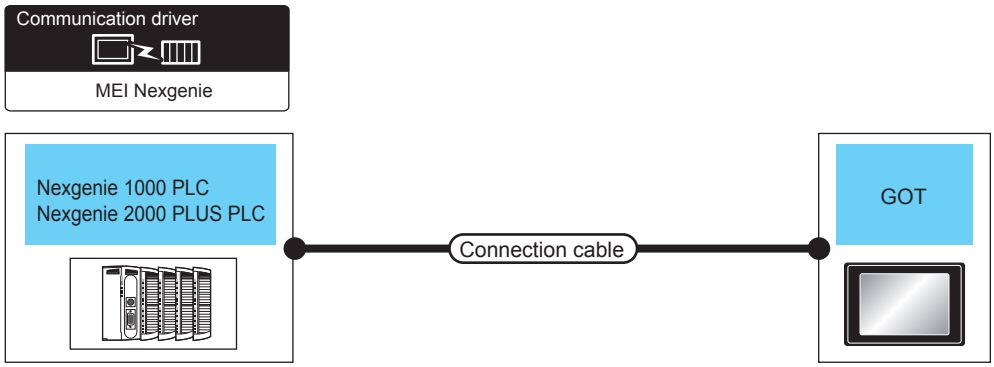

Communication unit	Communication Type	Connection cable		GOT		Number of connectable equipment
		Cable model Connection diagram number	Max. distance	Option device*4*5	Model	
Nexgenie 1000 PLC Nexgenie 2000 PLUS PLC	RS-232	Page 490 RS-232 connection diagram 1)	15m	- (Built into GOT)	GT27 GT25 GT23 GT21(07W) GT21(05Q) GS	1 PLC for 1 GOT
				GT15-RS2-9P	GT27 GT25	
				GT10-C02H-6PT9P*2	GT21(03P04P R4) GT21(03P04P R2)	
		Page 490 RS-232 connection diagram 2)	15m	- (Built into GOT)	GT21(04R) GT21(03P04P R2)	
	RS-422	Page 491 RS-422 connection diagram 1)	1200m	FA-LTBGT2R4CBL05(0.5m)*1 FA-LTBGT2R4CBL10(1m)*1 FA-LTBGT2R4CBL20(2m)*1	GT27 GT25 GT23	Up to 31 PLC for 1 GOT*3
		Page 491 RS-422 connection diagram 2)	1200m	- (Built into GOT)	GT27 GT25 GT23 GT21(07W) GT21(05Q) GS	
				GT15-RS4-9S	GT27 GT25	
				GT10-C02H-9SC	GT21(04R) GT21(03P04P R4)	
		Page 492 RS-422 connection diagram 3)	1200m	- (Built into GOT)	GT21(04R) GT21(03P04P ET/R4) GT21(03P04P R4)	

Communication unit	Communication Type	Connection cable		GOT		Number of connectable equipment
		Cable model Connection diagram number	Max. distance	Option device*4*5	Model	
Nexgenie 1000 PLC Nexgenie 2000 PLUS PLC	RS-485	User preparing Page 493 RS-485 connection diagram 1)	1200m	FA-LTBGT2R4CBL05(0.5m)*1 FA-LTBGT2R4CBL10(1m)*1 FA-LTBGT2R4CBL20(2m)*1	GT27 GT25 GT23	Up to 31 PLC for 1 GOT
		User preparing Page 493 RS-485 connection diagram 2)	1200m	- (Built into GOT)	GT27 GT25 GT23 GT21*7W GT21*5Q GS *6	
				GT10-C02H-9SC	GT21*4R GT2103P-04P-R4	
		User preparing Page 494 RS-485 connection diagram 3)	1200m	GT15-RS4-TE	GT27 GT25	
		User preparing Page 494 RS-485 connection diagram 4)	1200m	- (Built into GOT)	GT21*4R GT2103P-04P-ETR4 GT2103P-04P-R4	

*1 Product manufactured by MITSUBISHI ELECTRIC ENGINEERING COMPANY LIMITED. For details of the product, contact MITSUBISHI ELECTRIC ENGINEERING COMPANY LIMITED.
*2 Do not ground the case of the 9-pin D-Sub connector when using the GT10-C02H-6PT9P (revision A or B).
*3 One PLC can be connected to GS21-W.
*4 GT25-W is not compatible to the option devices other than FA-LTBGT2R4CBL□□.
*5 GT2505-V does not support the option device.
*6 Only available to GS21-W-N for GS21.

14.3 Connection Diagram

The following diagram shows the connection between the GOT and the PLC.

RS-232 cable

Connection diagram

■RS-232 connection diagram 1)

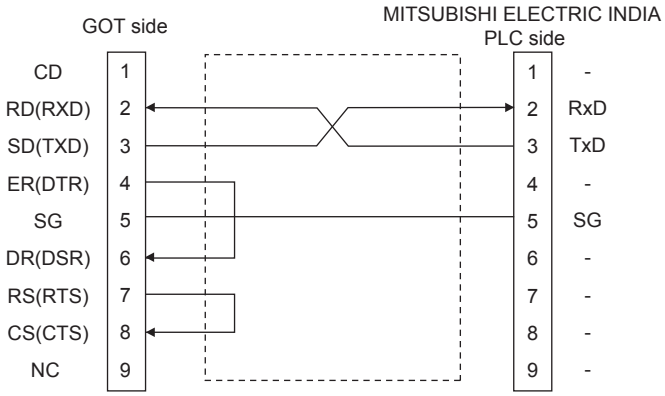

■RS-232 connection diagram 2)

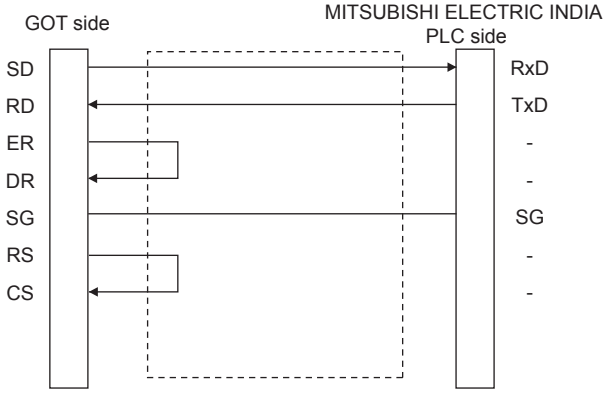

Precautions when preparing a cable

■Cable length

The length of the RS-232 cable must be 15m or less.

■GOT side connector

For the GOT side connector, refer to the following.

☞ Page 58 GOT connector specifications

■MITSUBISHI ELECTRIC INDIA PLC side connector

Use the connector compatible with the MITSUBISHI ELECTRIC INDIA PLC side module.

For details, refer to the user's manual of the MITSUBISHI ELECTRIC INDIA PLC.

RS-422 cable

The following diagram shows the connection between the GOT and the PLC.

RS-422 connection diagram 1)

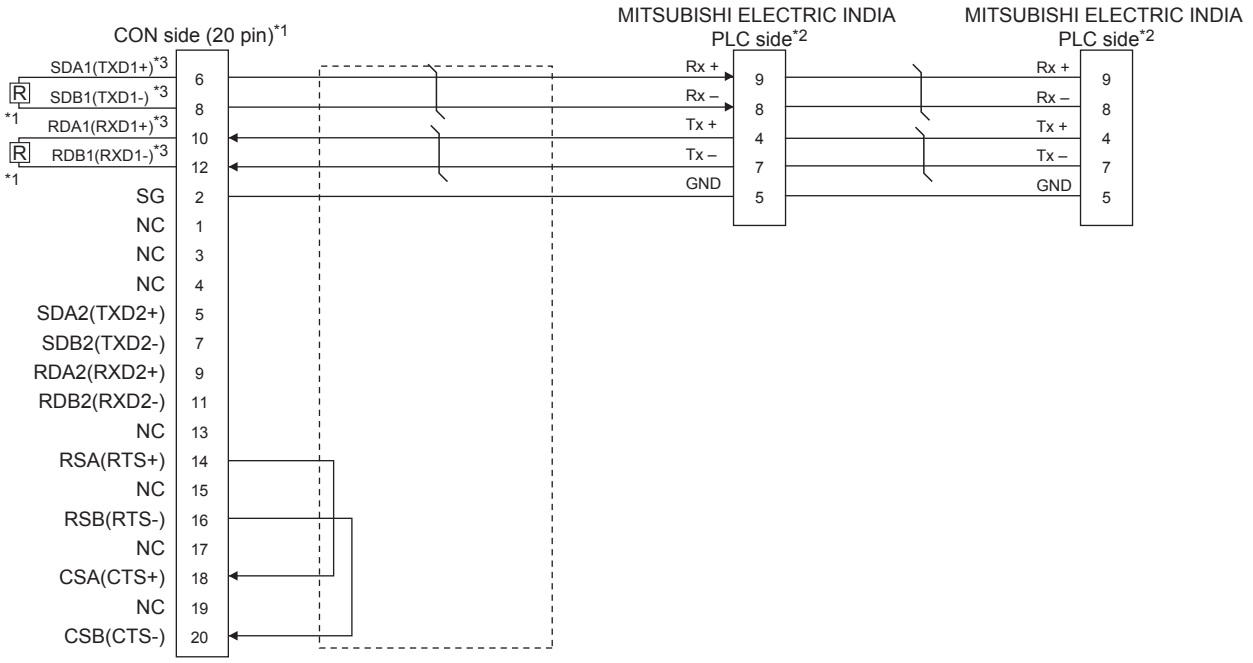

*1 A terminating resistor is required.
Set the terminating resistor selector switch in the main unit to “Disable”, and connect a terminating resistor (110 Ω).
☞ Page 62 Terminating resistors of GOT

*2 For terminating resistors in PLCs manufactured by MITSUBISHI ELECTRIC INDIA, refer to the manual of PLCs manufactured by MITSUBISHI ELECTRIC INDIA.

*3 Use a twisted pair cable for the SDA1/SDB1.

RS-422 connection diagram 2)

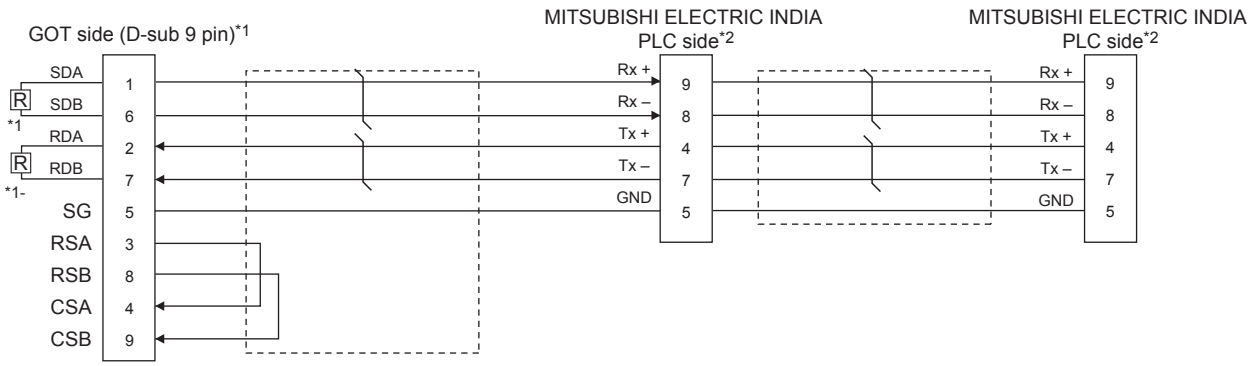

*1 For GT27, GT25 (except for GT2505-V), and GT23, set the terminating resistor setting switch of the GOT to Disable and connect a 330 Ω terminating resistor.
For GT2505-V, GT21, and GS21-W-N, set the terminating resistor to 330 Ω.
For GS21-W, since the terminating resistor is fixed to 330 Ω, no setting is required for the terminating resistor.
☞ Page 62 Terminating resistors of GOT

*2 For terminating resistors in PLCs manufactured by MITSUBISHI ELECTRIC INDIA, refer to the manual of PLCs manufactured by MITSUBISHI ELECTRIC INDIA.

RS-422 connection diagram 3)

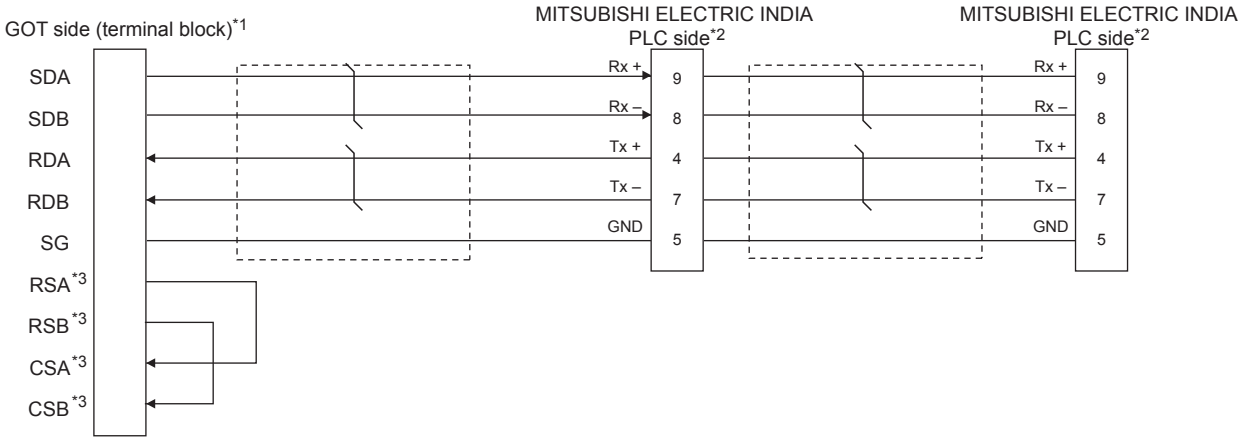

*1 Set the terminating resistor to “330Ω” when arranging the GOT in the end position of the system configuration.
Set the terminating resistor to “OPEN” when arranging the GOT in any position other than the end position of the system configuration.
☞ Page 62 Terminating resistors of GOT

*2 For terminating resistors in PLCs manufactured by MITSUBISHI ELECTRIC INDIA, refer to the manual of PLCs manufactured by MITSUBISHI ELECTRIC INDIA.

*3 The signals RSA, RSB, CSA, and CSB are not provided for GT2104-PMBD, GT2103-PMBD. Return connection is not required.

Precautions when preparing a cable

■Cable length

The length of the RS-422 cable must be 1200m or less.

■GOT side connector

For the GOT side connector, refer to the following.

☞ Page 58 GOT connector specifications

■Connectors on the MITSUBISHI ELECTRIC INDIA PLC side

Use proper connectors on the MITSUBISHI ELECTRIC INDIA PLC side.

For the details, refer to the User’s Manual of the used PLC manufactured by MITSUBISHI ELECTRIC INDIA.

Connecting terminating resistors

■GOT side

Set the terminating resistor setting switch.

For the procedure to set the terminating resistor, refer to the following.

☞ Page 62 Terminating resistors of GOT

■MITSUBISHI ELECTRIC INDIA PLC side

It is necessary to set terminating resistors in the PLC manufactured by MITSUBISHI ELECTRIC INDIA when connecting the GOT to the PLC manufactured by MITSUBISHI ELECTRIC INDIA.

For the details, refer to the User’s Manual of the used PLC manufactured by MITSUBISHI ELECTRIC INDIA.

RS-485 cable

The following diagram shows the connection between the GOT and the PLC.

RS-485 connection diagram 1)

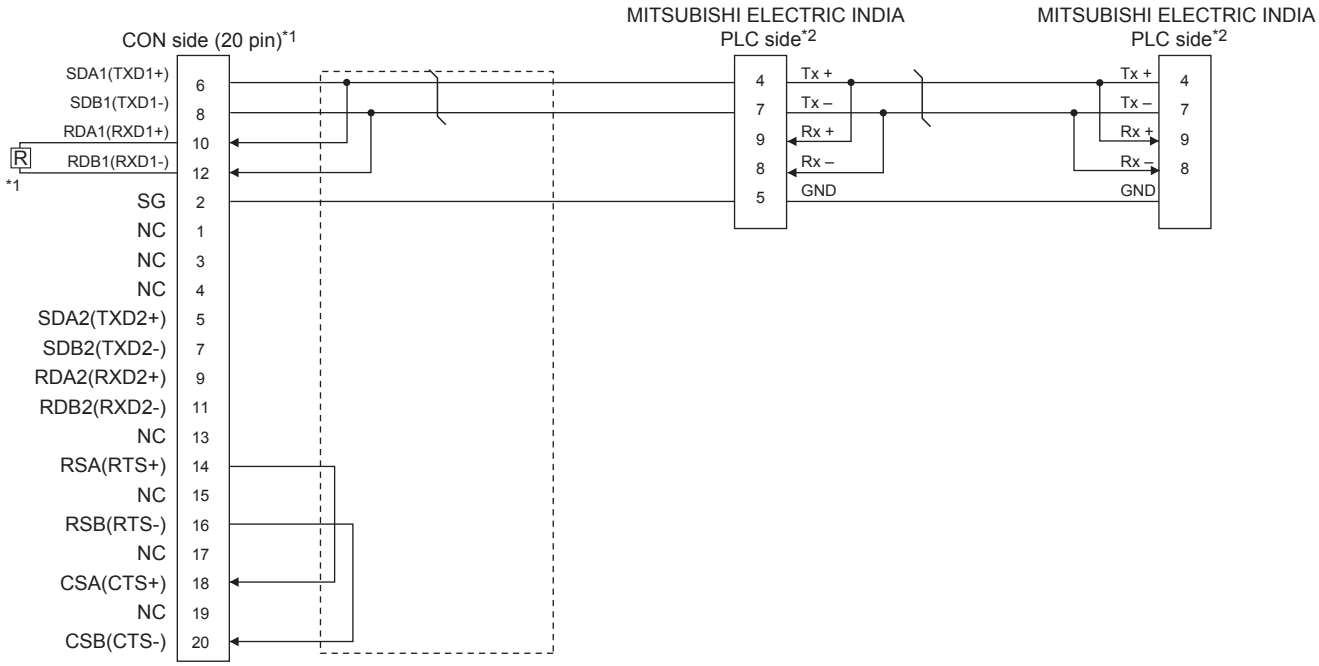

*1 A terminating resistor is required.
Set the terminating resistor selector switch in the main unit to “Disable”, and connect a terminating resistor (110 Ω).
☞ Page 62 Terminating resistors of GOT

*2 For terminating resistors in PLCs manufactured by MITSUBISHI ELECTRIC INDIA, refer to the manual of PLCs manufactured by MITSUBISHI ELECTRIC INDIA.

RS-485 connection diagram 2)

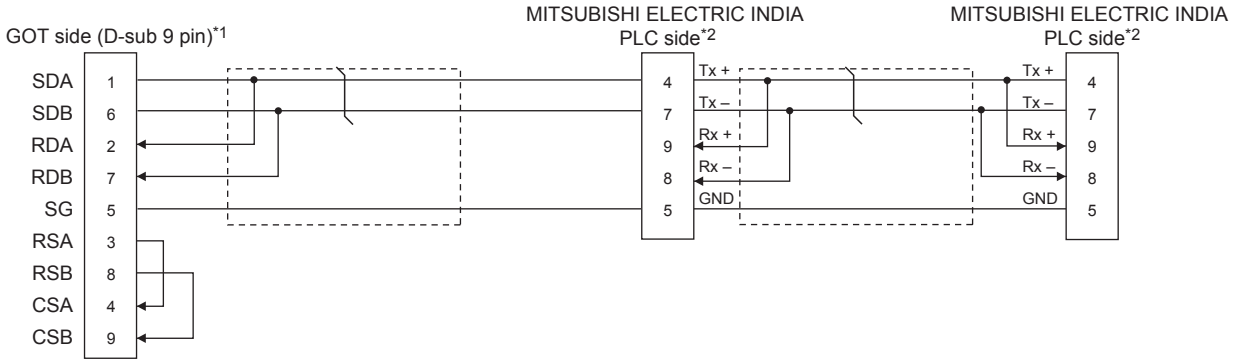

*1 When arranging GT27, GT25 (except GT2505-V), or GT23 in the end position of the system configuration, set the terminating resistor to Enable. (For GT2505-V, GT21, and GS21-W-N, set 110 Ω).
When arranging GT27, GT25 (except GT2505-V), or GT23 in any position other than the end position, set the terminating resistor to Disable. (For GT2505-V, GT21, and GS21-W-N, set OPEN.)
☞ Page 62 Terminating resistors of GOT

*2 For terminating resistors in PLCs manufactured by MITSUBISHI ELECTRIC INDIA, refer to the manual of PLCs manufactured by MITSUBISHI ELECTRIC INDIA.

RS-485 connection diagram 3)

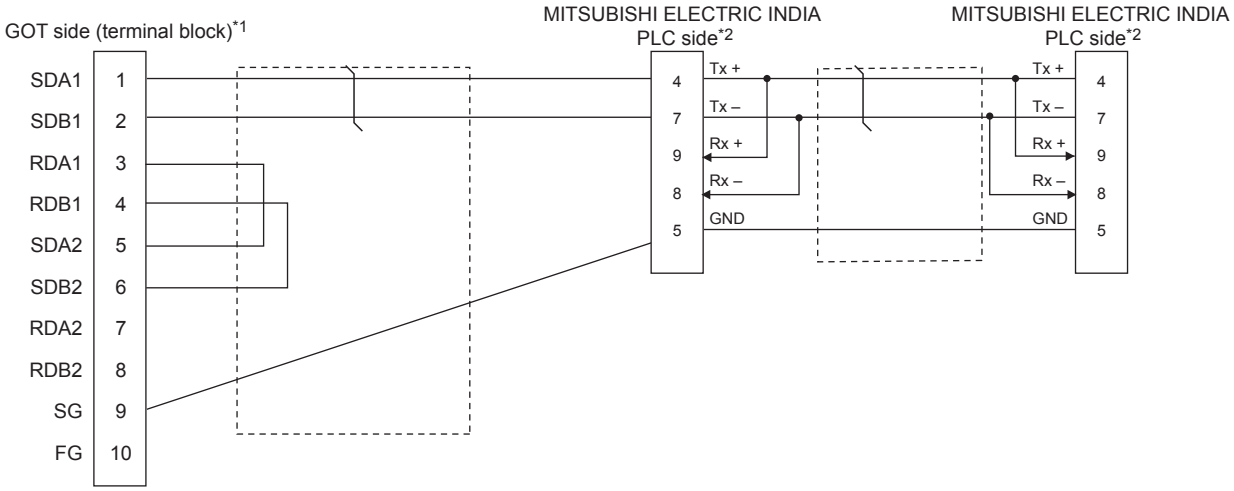

*1 Set the terminating resistor to “Enable” when arranging the GOT in the end position of the system configuration.
Set the terminating resistor to “Disable” when arranging the GOT in any position other than the end position of the system configuration.
☞ Page 62 Terminating resistors of GOT

*2 For terminating resistors in PLCs manufactured by MITSUBISHI ELECTRIC INDIA, refer to the manual of PLCs manufactured by MITSUBISHI ELECTRIC INDIA.

RS-485 connection diagram 4)

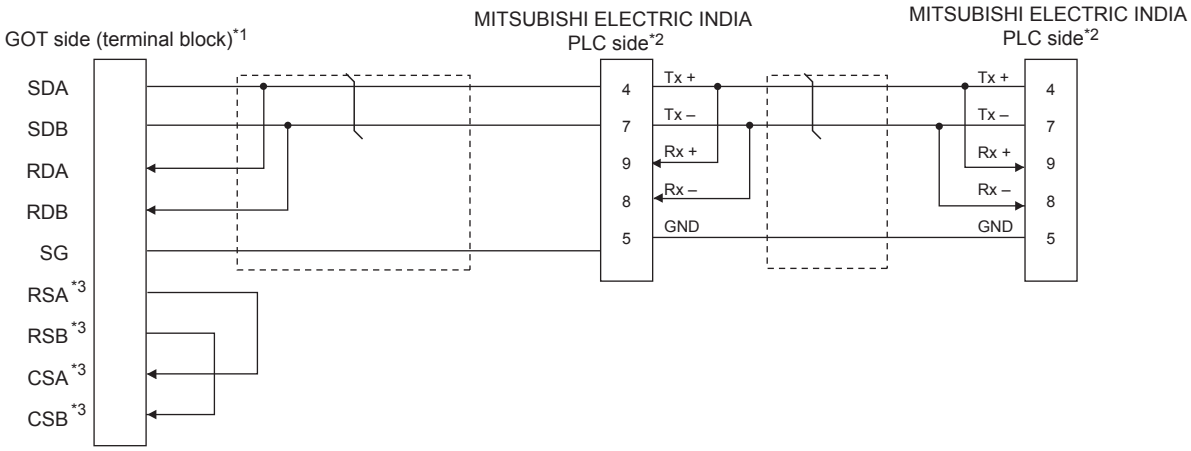

*1 Set the terminating resistor to “110Ω” when arranging the GOT in the end position of the system configuration.
Set the terminating resistor to “OPEN” when arranging the GOT in any position other than the end position of the system configuration.
☞ Page 62 Terminating resistors of GOT

*2 For terminating resistors in PLCs manufactured by MITSUBISHI ELECTRIC INDIA, refer to the manual of PLCs manufactured by MITSUBISHI ELECTRIC INDIA.

*3 The signals RSA, RSB, CSA, and CSB are not provided for GT2104-PMBD, GT2103-PMBD. Return connection is not required.

Precautions when preparing a cable

■Cable length

The length of the RS-485 cable must be 1200m or less.

■GOT side connector

For the GOT side connector, refer to the following.

☞ Page 58 GOT connector specifications

■Connectors on the MITSUBISHI ELECTRIC INDIA PLC side

Use proper connectors on the MITSUBISHI ELECTRIC INDIA PLC side.

For the details, refer to the User's Manual of the used MITSUBISHI ELECTRIC INDIA PLC.

Connecting terminating resistors

■GOT side

Set the terminating resistor using the terminating resistor setting switch.

For the procedure to set the terminating resistor, refer to the following.

☞ Page 62 Terminating resistors of GOT

■Connectors on the MITSUBISHI ELECTRIC INDIA PLC side

Use proper connectors on the MITSUBISHI ELECTRIC INDIA PLC side.

For the details, refer to the User's Manual of the used PLC manufactured by MITSUBISHI ELECTRIC INDIA.

14.4 GOT Side Settings

Setting the communication interface (Controller setting)

Set the channel of the connected equipment.

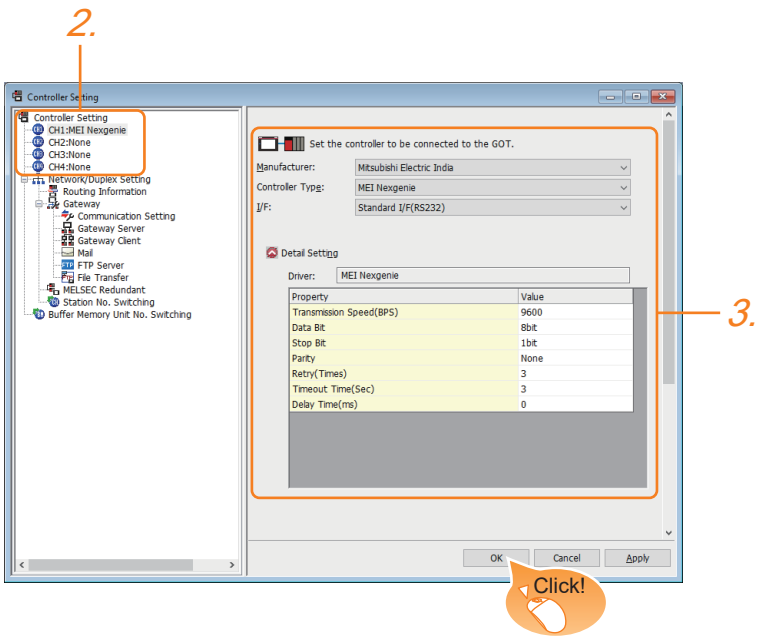

1. Select [Common] → [Controller Setting] from the menu.

2. In the [Controller Setting] window, select the channel No. to be used from the list menu.

3. Set the following items.

- [Manufacturer]: [Mitsubishi Electric India]
- [Controller Type]: [MEI Nexgenie]
- [I/F]: Interface to be used
- [Detail Setting]: Configure the settings according to the usage environment.

☞ Page 497 Communication detail settings

4. When you have completed the settings, click the [OK] button.

Point

The settings of connecting equipment can be confirmed in [I/F Communication Setting].
For details, refer to the following.
☞ Page 48 I/F communication setting

Communication detail settings

Make the settings according to the usage environment.

Property	Value
Transmission Speed(BPS)	9600
Data Bit	8bit
Stop Bit	1bit
Parity	None
Retry(Times)	3
Timeout Time(Sec)	3
Delay Time(ms)	0

Item	Description	Range
Transmission Speed	Set this item when change the transmission speed used for communication with the connected equipment. (Default: 9600bps)	9600bps, 19200bps, 38400bps, 57600bps, 115200bps
Data Bit*1	Set this item when change the data length used for communication with the connected equipment. (Default: 8bits)	7bit/8bit
Stop Bit	Specify the stop bit length for communications. (Default: 1bit)	1bit/2bit
Parity	Specify whether or not to perform a parity check, and how it is performed during communication. (Default: Odd)	None Even Odd
Retry	Set the number of retries to be performed when a communication timeout occurs. (Default: 3times)	0 to 5times
Timeout Time	Set the time period for a communication to time out. (Default: 3sec)	1 to 30sec
Delay Time	Set this item to adjust the transmission timing of the communication request from the GOT. (Default: 0ms)	0 to 300 (ms)

*1 Set "8 bits".

Point

• Communication interface setting by the Utility

The communication interface setting can be changed on the Utility's [Communication Settings] after writing [Communication Settings] of project data.

For details on the Utility, refer to the following manuals.

GOT2000 Series User's Manual (Utility)

• Precedence in communication settings

When settings are made by GT Designer3 or the Utility, the latest setting is effective.

14.5 PLC Side Settings

Point

PLCs manufactured by MITSUBISHI ELECTRIC INDIA

For the details of PLCs manufactured by MITSUBISHI ELECTRIC INDIA, refer to the following manual.

PLCs manufactured by MITSUBISHI ELECTRIC INDIA

Communication settings

Make the communication settings using peripheral S/W of MITSUBISHI ELECTRIC INDIA PLC.

■Nexgenie 1000 PLC

Item	Setting details
Communication speed*1	9600bps, 19200bps, 38400bps, 57600bps, 115200bps
Data bit	8bits
Stop bit*1	1bit, 2bits
Parity bit*1	None, Even, Odd
Full duplex/Half duplex	Half duplex

*1 Adjust the settings with GOT settings.

■Nexgenie 2000 PLUS PLC

Item	Setting details
Communication speed*1	9600bps, 19200bps, 38400bps
Data bit	8bits
Stop bit*1	1bit, 2bits
Parity bit*1	None, Even, Odd
Full duplex/Half duplex	Half duplex

*1 Adjust the settings with GOT settings.

14.6 Settable Device Range

For the device setting dialog and range of devices usable in the GOT, refer to the following.

☞ Page 635 MITSUBISHI INDIA equipment ([MEI Nexgenie])

MEMO

15 SICK SAFETY CONTROLLER

- Page 501 Connectable Model List
- Page 502 System Configuration
- Page 503 Connection Diagram
- Page 504 GOT Side Settings
- Page 506 PLC Side Setting
- Page 507 Settable Device Range

15.1 Connectable Model List

The following table shows the connectable models.

Series	Model name	Clock	Communication Type	Connectable model	Refer to
Flexi Soft	FX3-CPU000000	×	RS-232	GT27 GT25 GT23 GT21 GS	☞ Page 502 Connecting to Flexi Soft
	FX3-CPU130002				
	FX3-CPU320002				

15.2 System Configuration

Connecting to Flexi Soft

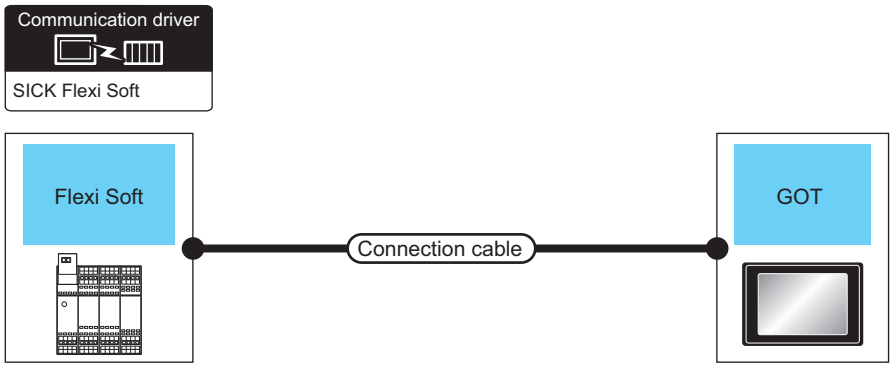

PLC		Connection cable		GOT		Number of connectable equipment
Series	Communication Type	Cable model Connection diagram number	Max. distance	Option device*3	Model	
Flexi Soft	RS-232	Part Number:6021195(2m)*1 Part Number:6036342(3m)*1	3m	- (Built into GOT)	GT27 GT25 GT23 GT21(07W) GT21(05Q) GS	1 PLC for 1 GOT
				GT15-RS2-9P	GT27 GT25	
				GT10-C02H-6PT9P*2	GT2103P-04P-R4 GT2103P-04P-R2	
		Part Number:6021195(2m)*1 Part Number:6036342(3m)*1 + User preparing Page 503 RS-232 connection diagram 1)	3.3m	- (Built into GOT)	GT2104R GT2103P-04P-R2	

*1 Product manufactured by SICK Inc. For details of the product, contact SICK Inc.

*2 When a GT10-C02H-6PT9P unit of the sub version A or B is used, do not ground the case of the D-sub (9-pin) connector.

*3 GT25-W, GT2505-V does not support the option device.

15.3 Connection Diagram

The following diagram shows the connection between the GOT and the controller.

RS-232 cable

Connection diagram

■RS-232 connection diagram 1)

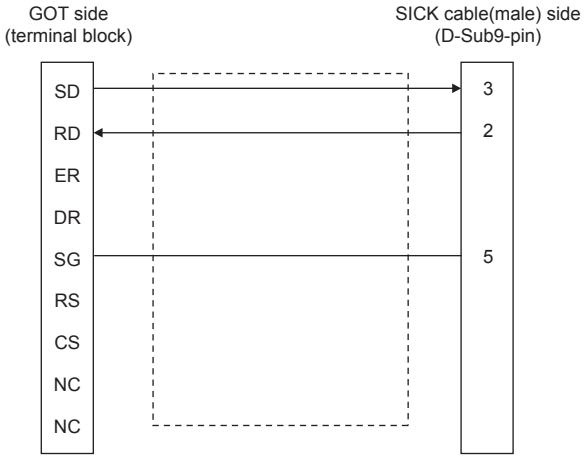

Precautions when preparing a cable

■Cable length

The length of the RS-232 cable must be 30cm or less.

■GOT side connector

For the GOT side connector, refer to the following.

☞ Page 58 GOT connector specifications

■SICK PLC side connector

Use the connector compatible with the SICK PLC side module.

For details, refer to the user's manual of the SICK PLC.

15.4 GOT Side Settings

Setting the communication interface (Controller setting)

Set the channel of the connected equipment.

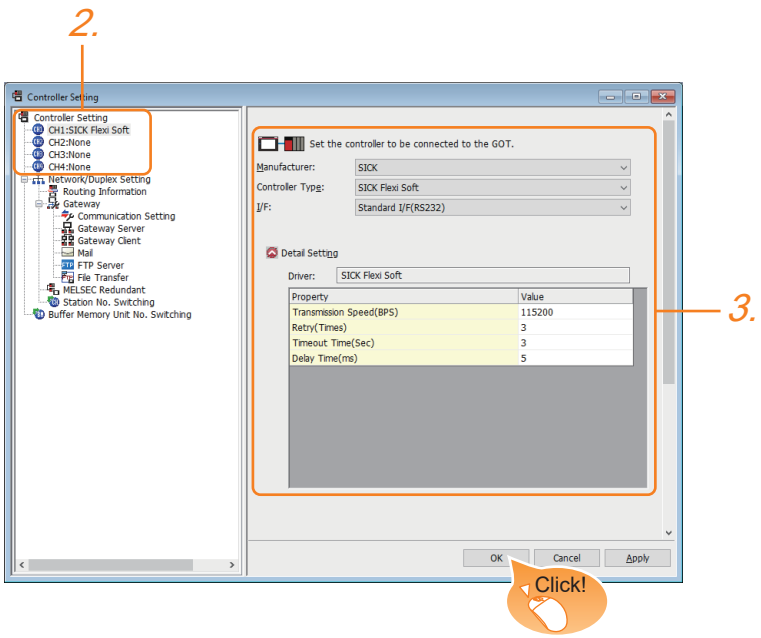

1. Select [Common] → [Controller Setting] from the menu.

2. In the [Controller Setting] window, select the channel No. to be used from the list menu.

3. Set the following items.

- [Manufacturer]: [SICK]
- [Controller Type]: [SICK Flexi Soft]
- [I/F]: Interface to be used
- [Detail Setting]: Configure the settings according to the usage environment.

☞ Page 505 Communication detail settings

4. When you have completed the settings, click the [OK] button.

Point

The settings of connecting equipment can be confirmed in [I/F Communication Setting].
For details, refer to the following.
☞ Page 48 I/F communication setting

Communication detail settings

Make the settings according to the usage environment.

SICK Flexi Soft

Property	Value
Transmission Speed(BPS)	115200
Retry(Times)	3
Timeout Time(Sec)	3
Delay Time(ms)	5

Item	Description	Range
Transmission Speed	Set this item when change the transmission speed used for communication with the connected equipment. (Default: 115200bps)	9600bps, 19200bps, 38400bps, 57600bps, 115200bps
Retry	Set the number of retries to be performed when a communication error occurs. (Default: 3times)	0 to 5times
Timeout Time	Set the time period for a communication to time out. (Default: 3sec)	1 to 30sec
Delay Time	Set this item to adjust the transmission timing of the communication request from the GOT. (Default: 5ms)	0 to 300 (ms)

Point

• Communication interface setting by the Utility

The communication interface setting can be changed on the Utility's [Communication setting] after writing [Communication Settings] of project data.

For details on the Utility, refer to the following manual.

GOT2000 Series User's Manual (Utility)

• Precedence in communication settings

When settings are made by GT Designer3 or the Utility, the latest setting is effective.

15.5 PLC Side Setting

Point

SICK PLC

For details of SICK PLCs, refer to the following manual.

User's Manual of the SICK PLC

Connecting to Flexi Soft

Communication settings

Communication settings are not required, since the following contents are fixed.

Setting item	Controller Side Settings
Communication speed	115200bps (fixed)
Data bit	8bits (fixed)
Parity bit	Without (fixed)
Stop bit	1bit (fixed)

15.6 Settable Device Range

For the device setting dialog and range of devices usable in the GOT, refer to the following.

☞ Page 638 SICK equipment ([SICK Flexi Soft])

MEMO

16 SIEMENS PLC

- Page 509 Connectable Model List
- Page 510 Serial Connection
- Page 520 Ethernet Connection
- Page 531 Settable Device Range

16.1 Connectable Model List

The following table shows the connectable models.

Series	Clock	Communication Type	Ethernet Connection Type	Connectable model	Refer to
SIMATIC S7-200	×	RS-232	-	GT27 GT25 GT23 GT21 GS	☞ Page 512 Connecting to SIMATIC S7-200 series
		Ethernet	OP communication	GT27 GT25 GT23 GT21 GS	☞ Page 521 Ethernet connection type: Connecting to OP communication
SIMATIC S7-200 SMART	○*1	RS-232	-	GT21 GS	☞ Page 512 Connecting to SIMATIC S7-200 series
		Ethernet	OP communication	GT27 GT25 GT23 GT21 GS	☞ Page 521 Ethernet connection type: Connecting to OP communication
SIMATIC S7-200 CN	×	RS-232	-	GT21 GS	☞ Page 512 Connecting to SIMATIC S7-200 series
SIMATIC S7-300	○*1	RS-232	-	GT27 GT25 GT23 GT21 GS	☞ Page 510 Connecting to SIMATIC S7-300 or SIMATIC S7-400 series
		Ethernet	FETCH/WRITE	GT27 GT25 GT23	☞ Page 520 Ethernet connection type: Connecting to FETCH/WRITE
			OP communication	GT27 GT25 GT23 GT21 GS	☞ Page 521 Ethernet connection type: Connecting to OP communication
SIMATIC S7-400	○*1	RS-232	-	GT27 GT25 GT23 GT21 GS	☞ Page 510 Connecting to SIMATIC S7-300 or SIMATIC S7-400 series
		Ethernet	FETCH/WRITE	GT27 GT25 GT23	☞ Page 520 Ethernet connection type: Connecting to FETCH/WRITE
			OP communication	GT27 GT25 GT23 GT21 GS	☞ Page 521 Ethernet connection type: Connecting to OP communication
SIMATIC S7-1200	×	Ethernet	OP communication	GT27 GT25 GT23 GT21 GS	☞ Page 521 Ethernet connection type: Connecting to OP communication
SIMATIC S7-1500	×	Ethernet	OP communication	GT27 GT25 GT23 GT21 GS	☞ Page 521 Ethernet connection type: Connecting to OP communication

*1 Only OP communication type can be used in an Ethernet connection.

16.2 Serial Connection

Connecting to SIMATIC S7-300 or SIMATIC S7-400 series

When connecting to one PLC

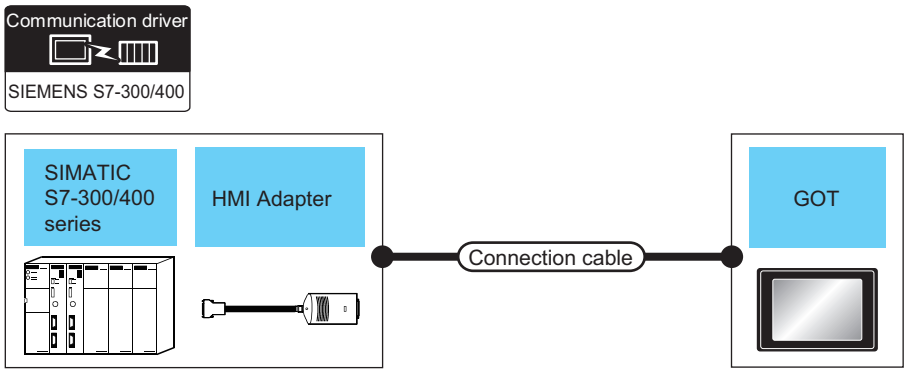

PLC			Connection cable		GOT		Number of connectable equipment
Series	HMI Adapter*1	Communication Type	Cable model Connection diagram number	Max. distance	Option device*3	Model	
SIMATIC S7-300 SIMATIC S7-400	MLFB: 6ES7 972-0CA11-0XA0	RS-232	GT09-C30R20801-9S (3m) or User preparing RS232 connection diagram 1)	15m	- (Built into GOT)	GT27 GT25 GT23 GT21 GT21 GS	1 GOT for 1 HMI Adapter
					GT15-RS2-9P	GT27 GT25	
					GT10-C02H-6PT9P*2	GT2103P GT2104P R4 GT2103P GT2104P R2	
			User preparing RS232 connection diagram 2)	15m	- (Built into GOT)	GT2104R GT2103P GT2104P R2	

*1 Product manufactured by Siemens AG. For details of this product, contact Siemens AG.
*2 When a GT10-C02H-6PT9P unit of the sub version A or B is used, do not ground the case of the D-sub (9-pin) connector.
*3 GT25-W, GT2505-V does not support the option device.

When connecting to multiple PLCs

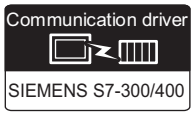

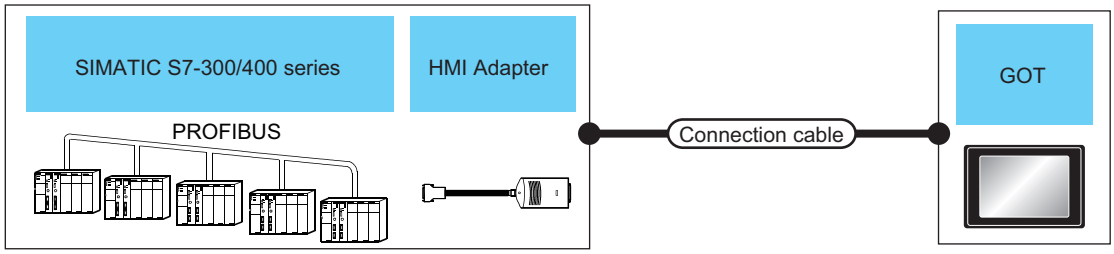

PLC			Connection cable		GOT		Number of connectable equipment
Series	HMI Adapter*1	Communication Type	Cable model Connection diagram number	Max. distance	Option device*3	Model	
SIMATIC S7-300 SIMATIC S7-400	MLFB: 6ES7 972-0CA11-0XA0	RS-232	GT09-C30R20801-9S (3m) or User preparing RS232 connection diagram 1)	15m	- (Built into GOT)	GT27 GT25 GT23 GT21 GT21 GS	1 GOT for 1 HMI Adapter
					GT15-RS2-9P	GT27 GT25	
					GT10-C02H-6PT9P*2	GT21 GT21	
			User preparing RS232 connection diagram 2)	15m	- (Built into GOT)	GT21 GT21	

*1 Product manufactured by Siemens AG. For details of this product, contact Siemens AG.
*2 When a GT10-C02H-6PT9P unit of the sub version A or B is used, do not ground the case of the D-sub (9-pin) connector.
*3 GT25-W, GT2505-V does not support the option device.

Connecting to SIMATIC S7-200 series

Communication driver

SIEMENS S7-200

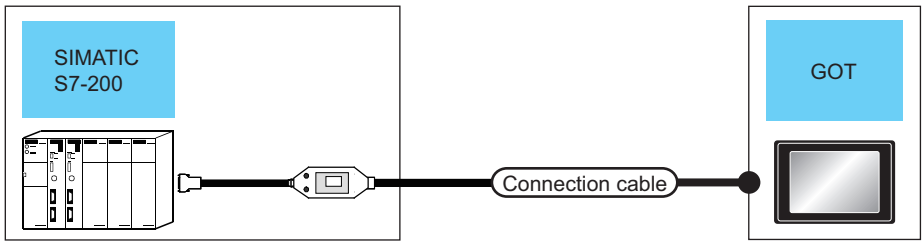

PLC		Connection cable		GOT		Number of connectable equipment
Series	Communication Type	Cable model Connection diagram number	Max. distance	Option device*3	Model	
SIMATIC S7-200	RS-232	6ES7 901-3BF20-0XA0*1 6ES7 901-3CB30-0XA0*1	15m	- (Built into GOT)	GT27 GT25 GT23 GT21(07W) GT21(05Q) GS	1 GOT for 1 PLC
				GT15-RS2-9P	GT27 GT25	
				GT10-C02H-6PT9P*2	GT21(03P 104P R4) GT21(03P 104P R2)	
		6ES7 901-3BF20-0XA0*1 6ES7 901-3CB30-0XA0*1 + User preparing RS232 connection diagram 3)	15m	- (Built into GOT)	GT21(04R) GT21(03P 104P R2)	
SIMATIC S7-200 SMART SIMATIC S7-200 CN	RS-232	6ES7 901-3BF20-0XA0*1 6ES7 901-3CB30-0XA0*1	15m	- (Built into GOT)	GT21(07W) GT21(05Q) GS	
				GT10-C02H-6PT9P*2	GT21(03P 104P R4) GT21(03P 104P R2)	
		6ES7 901-3BF20-0XA0*1 6ES7 901-3CB30-0XA0*1 + User preparing RS232 connection diagram 3)	15m	- (Built into GOT)	GT21(04R) GT21(03P 104P R2)	

*1 Product manufactured by Siemens AG. For details of this product, contact Siemens AG.
*2 When a GT10-C02H-6PT9P unit of the sub version A or B is used, do not ground the case of the D-sub (9-pin) connector.
*3 GT25-W, GT2505-V does not support the option device.

Connection Diagram

The following diagram shows the connection between the GOT and the PLC.

RS-232 cable

■Connection diagram

• RS232 connection diagram 1)

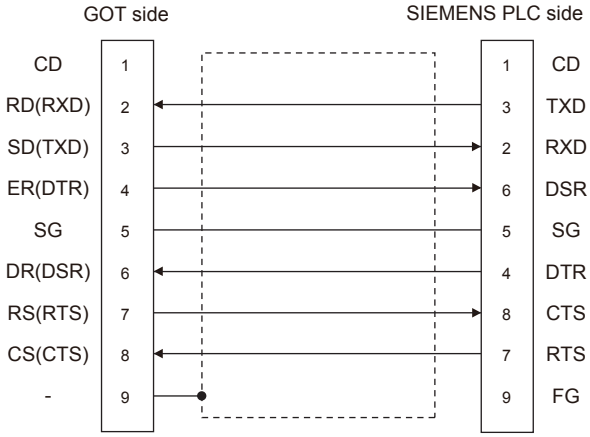

• RS232 connection diagram 2)

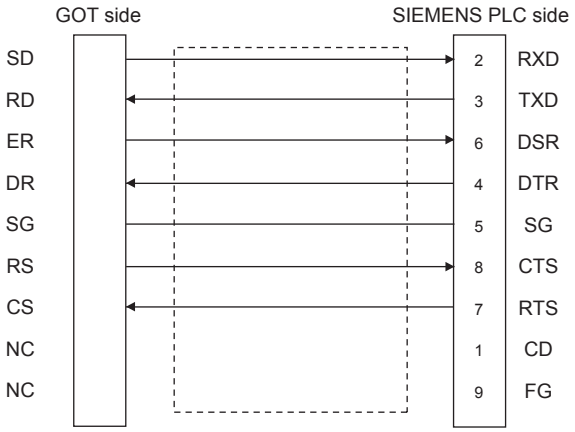

• RS232 connection diagram 3)

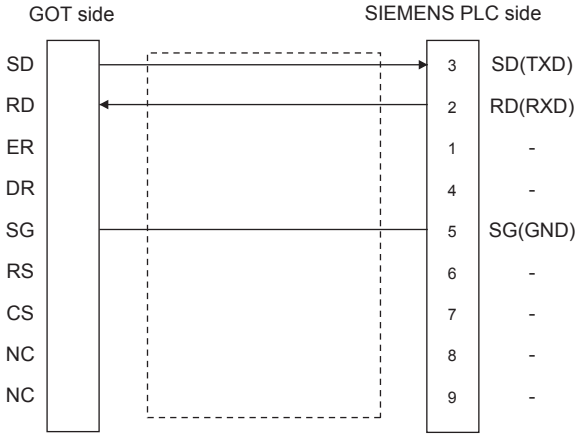

16

■Precautions when preparing a cable

• Cable length

The length of the RS-232 cable must be 15m or less.

• GOT side connector

For the GOT side connector, refer to the following.

☞ Page 58 GOT connector specifications

• SIEMENS PLC side connector

Use the connector compatible with the SIEMENS PLC side.

For details, refer to the SIEMENS PLC user's manual.

Setting communication interface (Communication settings)

Set the channel of the connected equipment.

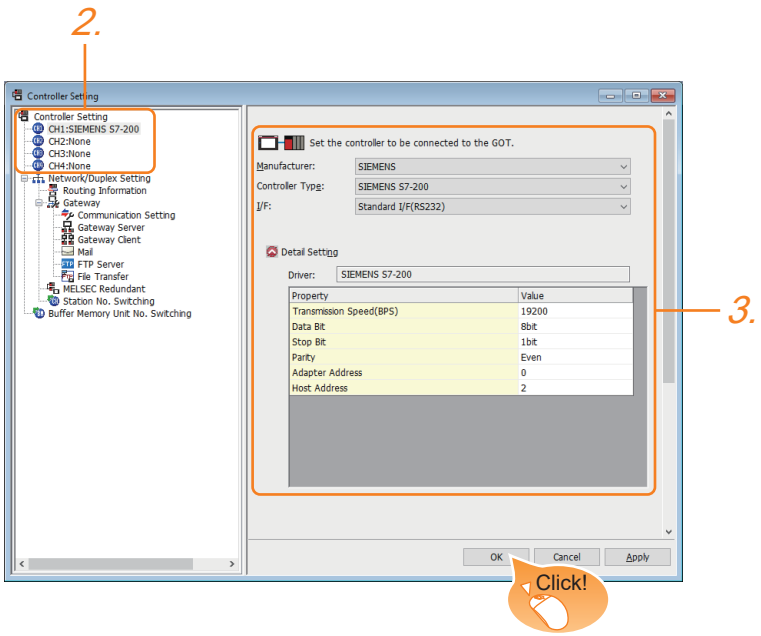

1. Select [Common] → [Controller Setting] from the menu.

2. In the [Controller Setting] window, select the channel No. to be used from the list menu.

3. Set the following items.

- [Manufacturer]: [SIEMENS]
- [Controller Type]: Select one of the following items.

<For GT27, GT25, and GT23>

[SIEMENS S7-300/400]

[SIEMENS S7-200]

<For GT21, GS21>

[SIEMENS S7-300/400]

[SIEMENS S7-200(CN/SMART)]

- [I/F]: Interface to be used
- [Detail Setting]: Configure the settings according to the usage environment.

☞ Page 516 Communication detail settings

4. When you have completed the settings, click the [OK] button.

Point

The settings of connecting equipment can be confirmed in [I/F Communication Setting].
For details, refer to the following.
☞ Page 48 I/F communication setting

Communication detail settings

Make the settings according to the usage environment.

■SIEMENS S7-300/400

Property	Value
Transmission Speed(BPS)	38400
Data Bit	8 bit
Stop Bit	1 bit
Parity	Odd
Adapter Address	1
Host Address	2

Item	Description	Range
Transmission Speed*2	Set this item when change the transmission speed used for communication with the connected equipment. (Default: 38400bps)	9600bps, 19200bps, 38400bps
Data Bit	Set this item when change the data length used for communication with the connected equipment. (Default: 8bit)	8bit (fixed)
Stop Bit	Specify the stop bit length for communications. (Default: 1bit)	1bit (fixed)
Parity	Specify whether or not to perform a parity check, and how it is performed during communication. (Default: Odd)	Odd (fixed)
Adapter Address*1*2	Specify the adapter address (station No. of the adapter to which the GOT is connected) in the connected network. (Default: 1)	1 to 31
Host Address*1*2	Specify the host address (station No. of the PLC that the GOT will monitor) in the connected network. (Default: 2)	1 to 31

*1 Set the address without overlapping the address of other units.

*2 The GOT automatically sets the values of Transmission Speed, Adapter Address, and Host Address to the HMI Adapter.

■SIEMENS S7-200

Property	Value
Transmission Speed(BPS)	19200
Data Bit	8 bit
Stop Bit	1 bit
Parity	Even
Adapter Address	0
Host Address	2

Item	Description	Range
Transmission Speed	Set this item when change the transmission speed used for communication with the connected equipment. (Default: 19200bps)	9600bps, 19200bps, 38400bps, 57600bps, 115200bps
Data Bit	Set this item when change the data length used for communication with the connected equipment. (Default: 8bits)	7bits/8bits
Stop Bit	Specify the stop bit length for communications. (Default: 1bit)	1bit/2bits
Parity	Specify whether or not to perform a parity check, and how it is performed during communication. (Default: Even)	None Even Odd
Adapter Address	Specify the adapter address (station No. of the adapter to which the GOT is connected) in the connected network. (Default: 0)	0 to 31
Host Address	Specify the host address (station No. of the PLC that the GOT will monitor) in the connected network. (Default: 2)	1 to 31

Point

• Communication interface setting by the Utility

The communication interface setting can be changed on the Utility's [Communication setting] after writing [Communication Settings] of project data.

For details on the Utility, refer to the following manual.

GOT2000 Series User's Manual (Utility)

• Precedence in communication settings

When settings are made by GT Designer3 or the Utility, the latest setting is effective.

PLC Side Setting

Point

SIEMENS PLC

For details of SIEMENS PLCs, refer to the following manuals.

SIEMENS PLC user's Manual

Model name		Refer to
PLC CPU	S7-200	Page 518 Connecting to SIMATIC S7-200, SIMATIC S7-200 CN/SMART
HMI Adapter	6ES7 972-0CA11-0XA0	Page 518 Connecting to HMI Adapter
PC/PPI cable	6ES7 901-3BF20-0XA0 6ES7 901-3CB30-0XA0	Page 518 Connecting to SIMATIC S7-200, SIMATIC S7-200 CN/SMART

Connecting to HMI Adapter

Communication settings

The following communication settings are made at the communication detail settings of the GOT side.

For details, refer to the following.

☞ Page 516 Communication detail settings

Setting item	PLC side setting
Transmission speed	9600bps, 19200bps, 38400bps
Data bit	8bits (fixed)
Parity bit	Odd (fixed)
Stop bit	1bit (fixed)
Adapter address	1 to 31
Host address	1 to 31

Connecting to SIMATIC S7-200, SIMATIC S7-200 CN/SMART

The following devices are available to GT21 and GS21.

Communication settings

Set the communication settings of PLC and PC/PPI cable.

■PLC settings

Set the communication settings of PLC by operating the SIEMENS programming tool(STEP7-WIN32).

Setting item	PLC Side Setting
Transmission speed*1	9600bps, 19200bps
Data bit	8bits (fixed)
Parity bit	Even (fixed)
Stop bit	1bit (fixed)
Host address*2	1 to 31

*1 Adjust the settings with GOT settings.

*2 Set the address without overlapping the address of other units.

■PC/PPI cable settings

Set the transmission speed by operating the DIP switch on the PC/PPI cable.

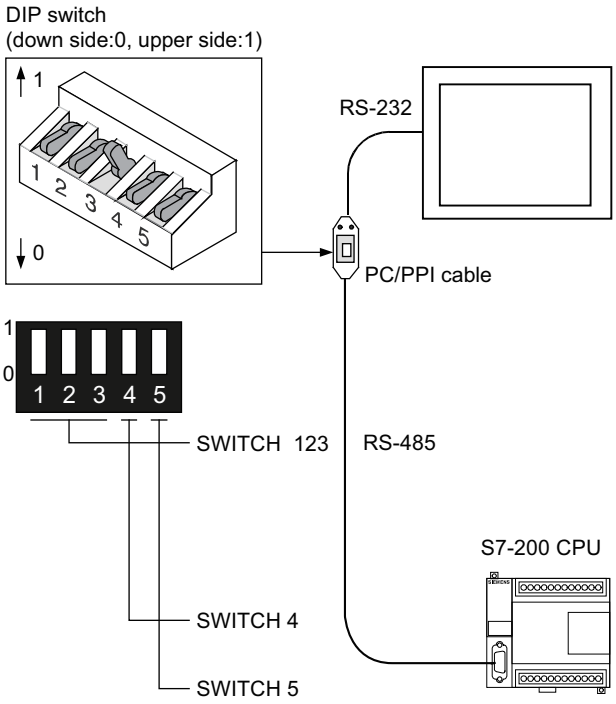

SWITCH1	SWITCH2	SWITCH3	SWITCH4	SWITCH5	Transmission speed
0	0	1	0	0	19200bps*1
0	1	0	0	0	9600bps*1

*1 Adjust with GOT settings.

16

Precautions

GOT alarm list (system alarm) function

Error information cannot be monitored when the GOT is connected to a SIEMENS PLC.

(The error information on the PLC CPU side can be monitored.)

For details on the alarm list (system alarm), refer to the following manual:

GT Designer3 (GOT2000) Screen Design Manual

When powering ON the system

■When powering ON the system

Turn ON all PLC CPUs before turning ON the GOT.

If the GOT is turned ON before power-up of the PLC CPUs, restart the GOT.

■When powering OFF a PLC CPU at another station

When a PLC CPU at another station (the PLC CPU to which the HMI Adapter is not connected) is turned OFF, monitoring by the GOT is stopped.

To resume the monitoring, restart the GOT.

(Monitoring will not be resumed on GOT even if the PLC CPU is turned ON again.)

16.3 Ethernet Connection

Ethernet connection type: Connecting to FETCH/WRITE

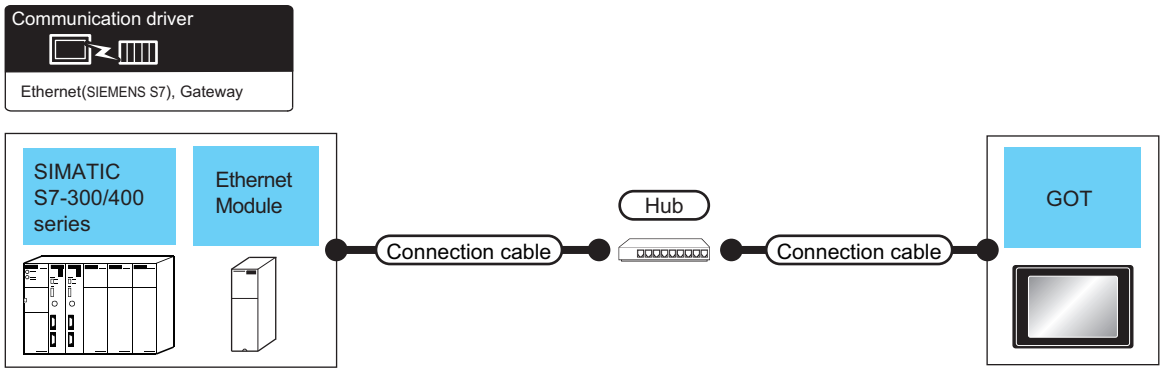

PLC		Connection cable		GOT		Number of connectable equipment
Series	Ethernet model*3	Cable model*1	Maximum segment length*2	Option device*5	Model	
SIMATIC S7-300	CP343-1 IT CP343-1 CP343-1 Lean CP343-1 Advanced	• 100BASE-TX Shielded twisted pair cable (STP) or unshielded twisted pair cable (UTP) of category 5 or higher • 10BASE-T Shielded twisted pair cable (STP) or unshielded twisted pair cable (UTP) of category 3 or higher	100m	- (Built into GOT)	GT27 GT25 GT23	When PLC:GOT is N:1 16 PLCs or less for 1 GOT When PLC:GOT is 1:N The following shows the number of GOTs for 1 PLC 32 or less*4 (recommended to 16 or less)
				GT25-J71E71-100	GT27 GT25	
SIMATIC S7-400	CP443-1 IT CP443-1		100m	- (Built into GOT)	GT27 GT25 GT23	
				GT25-J71E71-100	GT27 GT25	

*1 The destination connected with the twisted pair cable varies with the configuration of the applicable Ethernet network system.
Connect to the Ethernet module, hub, transceiver or other system equipment corresponding to the applicable Ethernet network system.
Use cables, connectors, and hubs that meet the IEEE802.3 10BASE-T/100BASE-TX standards.
To connect the target device and hub, use a cable according to the target device configuration.

*2 A length between a hub and a node.
The maximum distance differs depending on the Ethernet device to be used.
The following shows the number of the connectable nodes when a repeater hub is used.
• 10BASE-T: Max. 4 nodes for a cascade connection (500m)
• 100BASE-TX: Max. 2 nodes for a cascade connection (205m)
When switching hubs are used, the cascade connection between the switching hubs has no logical limit for the number of cascades.
For the limit, contact the switching hub manufacturer.

*3 Product manufactured by Siemens AG. For details of the product, contact Siemens AG.

*4 If the number of GOTs increases, the communication becomes highloaded, and it may affect the communication performance.

*5 GT25-W, GT2505-V does not support the option device.

Ethernet connection type: Connecting to OP communication

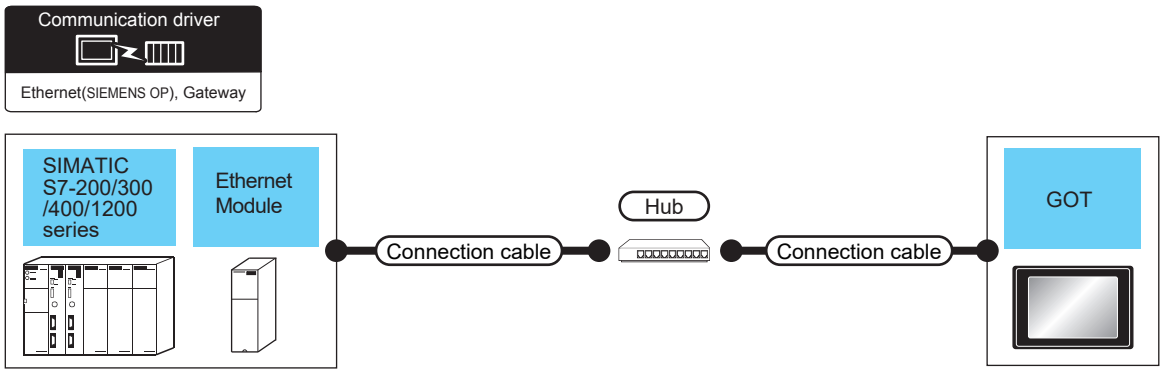

PLC		Connection cable		GOT		Number of connectable equipment
Series	Ethernet model*3	Cable model*1	Maximum segment length*2	Option device*5	Model	
SIMATIC S7-200	CP 243-1 CP 243-1 IT	• 100BASE-TX Shielded twisted pair cable (STP) or unshielded twisted pair cable (UTP) of category 5 or higher • 10BASE-T Shielded twisted pair cable (STP) or unshielded twisted pair cable (UTP) of category 3 or higher	100m	- (Built into GOT)	GT27 GT25 GT23 GT21-07W GT21-04R GT21-03P GT21-04P ET/R4 GS	When PLC:GOT is N:1 The following shows the number of PLCs for 1 GOT <For GT27, GT25> 128 or less <For GT21, GS21> 4 or less When PLC:GOT is 1:N The following shows the number of GOTs for 1 PLC 32 or less*4 (recommended to 16 or less)
				GT25-J71E71-100	GT27 GT25	
SIMATICS7-200SMART	- (Built into GOT)		100m	- (Built into GOT)	GT27 GT25 GT23 GT21-07W GT21-04R GT21-03P GT21-04P ET/R4 GS	
				GT25-J71E71-100	GT27 GT25	
SIMATIC S7-300	CP 343-1 CP 343-1 Lean CP 343-1 Advanced-IT		100m	- (Built into GOT)	GT27 GT25 GT23 GT21-07W GT21-04R GT21-03P GT21-04P ET/R4 GS	
				GT25-J71E71-100	GT27 GT25	
	- (Built into PLC)		100m	- (Built into GOT)	GT27 GT25 GT23 GT21-07W GT21-04R GT21-03P GT21-04P ET/R4 GS	
				GT25-J71E71-100	GT27 GT25	

PLC		Connection cable		GOT		Number of connectable equipment
Series	Ethernet model[*3]	Cable model[*1]	Maximum segment length[*2]	Option device[*5]	Model	
SIMATIC S7-400	CP 443-1 CP 443-1 Advanced-IT	• 100BASE-TX Shielded twisted pair cable (STP) or unshielded twisted pair cable (UTP) of category 5 or higher • 10BASE-T Shielded twisted pair cable (STP) or unshielded twisted pair cable (UTP) of category 3 or higher	100m	- (Built into GOT)	GT27 GT25 GT23 GT21 GT21 GS	When PLC:GOT is N:1 The following shows the number of PLCs for 1 GOT <For GT27, GT25> 128 or less <For GT21, GS21> 4 or less When PLC:GOT is 1:N The following shows the number of GOTs for 1 PLC 32 or less[*4] (recommended to 16 or less)
				GT25-J71E71-100	GT27 GT25	
	- (Built into PLC)		100m	- (Built into GOT)	GT27 GT25 GT23 GT21 GT21 GS	
				GT25-J71E71-100	GT27 GT25	
SIMATIC S7-1200	- (Built into PLC)		100m	- (Built into GOT)	GT27 GT25 GT23 GT21 GT21 GS	
				GT25-J71E71-100	GT27 GT25	
SIMATIC S7-1500	- (Built into PLC)		100m	- (Built into GOT)	GT27 GT25 GT23 GT21 GT21 GS	
				GT25-J71E71-100	GT27 GT25	

*1 The destination connected with the twisted pair cable varies with the configuration of the applicable Ethernet network system.
Connect to the Ethernet module, hub, transceiver or other system equipment corresponding to the applicable Ethernet network system.
Use cables, connectors, and hubs that meet the IEEE802.3 10BASE-T/100BASE-TX standards.
To connect the target device and hub, use a cable according to the target device configuration.

*2 A length between a hub and a node.
The maximum distance differs depending on the Ethernet device to be used.
The following shows the number of the connectable nodes when a repeater hub is used.
• 10BASE-T: Max. 4 nodes for a cascade connection (500m)
• 100BASE-TX: Max. 2 nodes for a cascade connection (205m)
When switching hubs are used, the cascade connection between the switching hubs has no logical limit for the number of cascades.
For the limit, contact the switching hub manufacturer.

*3 Product manufactured by Siemens AG. For details of the product, contact Siemens AG.

*4 If the number of GOTs increases, the communication becomes highloaded, and it may affect the communication performance.

*5 GT25-W, GT2505-V does not support the option device.

Setting communication interface (Communication settings)

Set the channel of the connected equipment.

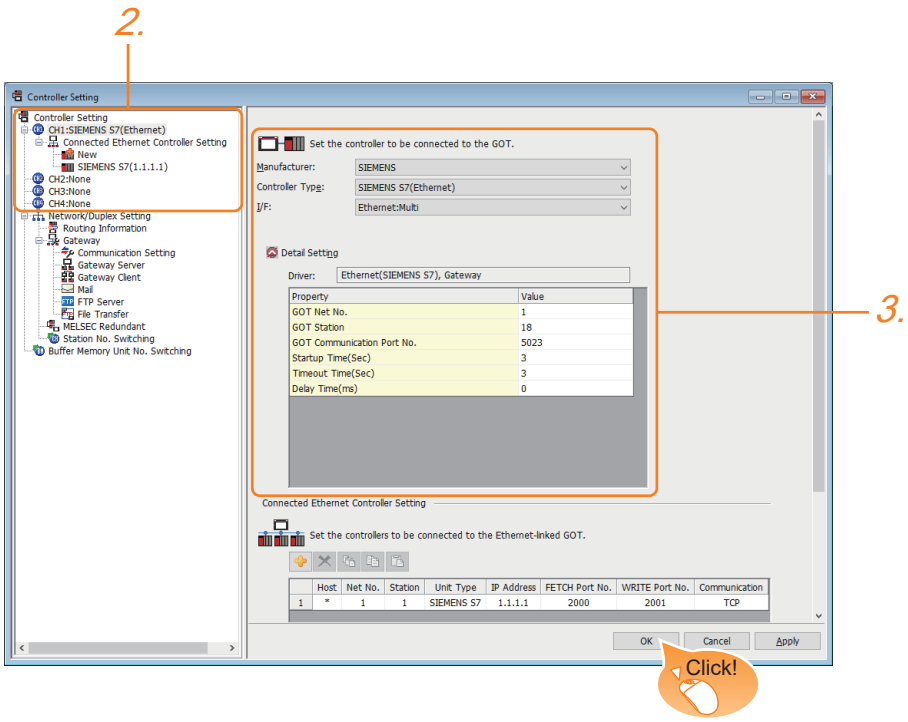

1. Select [Common] → [Controller Setting] from the menu.

2. In the [Controller Setting] window, select the channel No. to be used from the list menu.

3. Set the following items.

- [Manufacturer]: [SIEMENS]
- [Controller Type]: Depends on the Ethernet connection type.

FETCH/WRITE: [SIEMENS S7(Ethernet)]

OP communication: [SIEMENS OP(Ethernet)]

- [I/F]: [Ethernet:Multi]
- [Detail Setting]: Configure the settings according to the usage environment.

☞ Page 516 Communication detail settings

4. When you have completed the settings, click the [OK] button.

Point

The settings of connecting equipment can be confirmed in [I/F Communication Setting].

For details, refer to the following.

☞ Page 48 I/F communication setting

Communication detail settings

Make the settings according to the usage environment.

Property	Value
GOT Net No.	1
GOT Station	18
GOT Communication Port No.	5023
Startup Time(Sec)	3
Timeout Time(Sec)	3
Delay Time(ms)	0

Item	Description	Range
GOT Net No.	Set the network No. of the GOT. (Default: 1)	1 to 239
GOT Station*1	Set the station No. of the GOT. (Default: 18)	1 to 254
GOT Communication Port No.	Set the GOT port No. for the connection with the Ethernet equipment. (Default) Ethernet (SIEMENS S7), Gateway: 5023*2 Ethernet (SIEMENS OP), Gateway: 5024*2	1024 to 5010, 5014 to 49152, 49171 to 65534
Startup Time	Specify the time period from the GOT startup until GOT starts the communication with the PLC CPU. (Default: 3sec)	3 to 255 sec
Timeout Time	Set the time period for a communication to time out. (Default: 3sec)	3 to 90 sec
Delay Time	Set the delay time for reducing the load of the network/destination PLC. (Default: 0ms)	0 to 10000 (ms)

*1 Set different values for [GOT Station] of [Detail Setting] and [Station] of [Connected Ethernet Controller Setting].
☞ Page 525 Connected Ethernet Controller Setting

*2 When assigning the same driver to the multiple channels, in the communication drivers set as the second and following, the default value of [GOT Communication Port No.] becomes the earliest number in the vacant numbers of No. 6000 and later.

Point

• Communication interface setting by the Utility

The communication interface setting can be changed on the Utility's [Communication setting] after writing [Communication Settings] of project data.

For details on the Utility, refer to the following manual.

GOT2000 Series User's Manual (Utility)

• Precedence in communication settings

When settings are made by GT Designer3 or the Utility, the latest setting is effective.

GOT Ethernet Setting

The GOT can be connected to a different network by configuring the following setting.

■GOT IP address setting

Set the following communication port setting.

- Standard port (When using GT25-W, port 1)
- Extension port (When using GT25-W, port 2)

■GOT Ethernet common setting

Set the following setting which is common to the standard port and the extension port, or port 1 and port 2.

- [Default Gateway]
- [Peripheral S/W Communication Port No.]
- [Transparent Port No.]

■IP filter setting

By configuring the IP filter setting, the access from the specific IP address can be permitted or shut off.

For the detailed settings, refer to the following manual.

☞ Page 44 GOT Ethernet Setting

Connected Ethernet Controller Setting

■Ethernet connection type: FETCH/WRITE

The following describes [Connected Ethernet Controller Setting] when [SIEMENS S7(Ethernet)] is selected for [Controller Type].

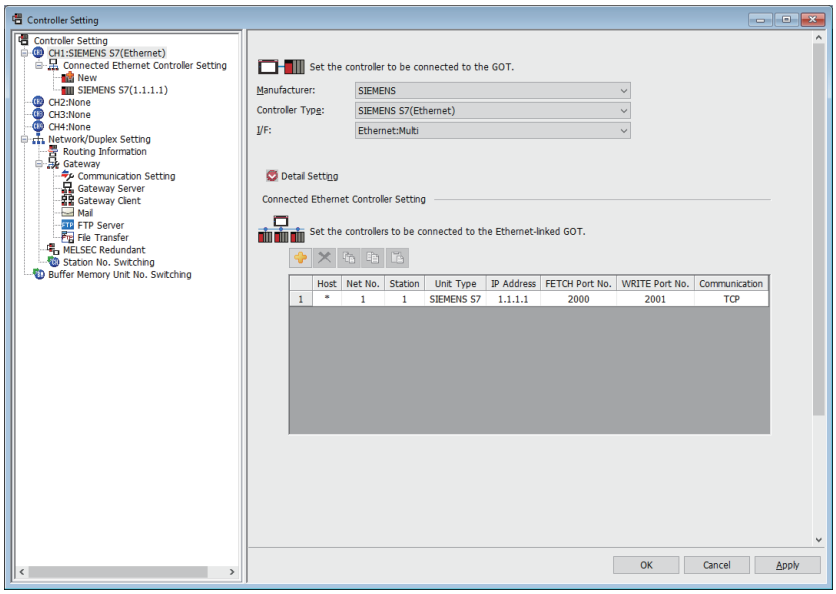

Item	Description	Set value
Host	The host is displayed. It refers to a station that can be connected without setting a station number. (The host is indicated with an asterisk (*).)	—
Net No.	Set the network No. of the connected Ethernet equipment. (Default: 1)	1 to 239
Station *1	Set the station No. of the connected Ethernet equipment. (Default: 1)	1 to 64
Unit Type	SIEMENS S7 (fixed)	SIEMENS S7 (fixed)
IP Address	Set the IP address of the connected Ethernet equipment. (Default: 1.1.1.1)	PLC side IP address
FETCH Port No.	Set the FETCH port No. of the connected Ethernet equipment. (Default: 2000)	1024 to 65534
WRITE Port No.	For the WRITE port No. of the connected Ethernet equipment, the value that the FETCH port No. is incremented by one is set automatically. (Default: 2001)	1025 to 65535
Communication	TCP (fixed)	TCP (fixed)

*1 Set different values for [GOT Station] of [Detail Setting] and [Station] of [Connected Ethernet Controller Setting].
☞ Page 524 Communication detail settings

■Ethernet connection type: OP communication

The following describes [Connected Ethernet Controller Setting] when [SIEMENS OP(Ethernet)] is selected for [Controller Type].

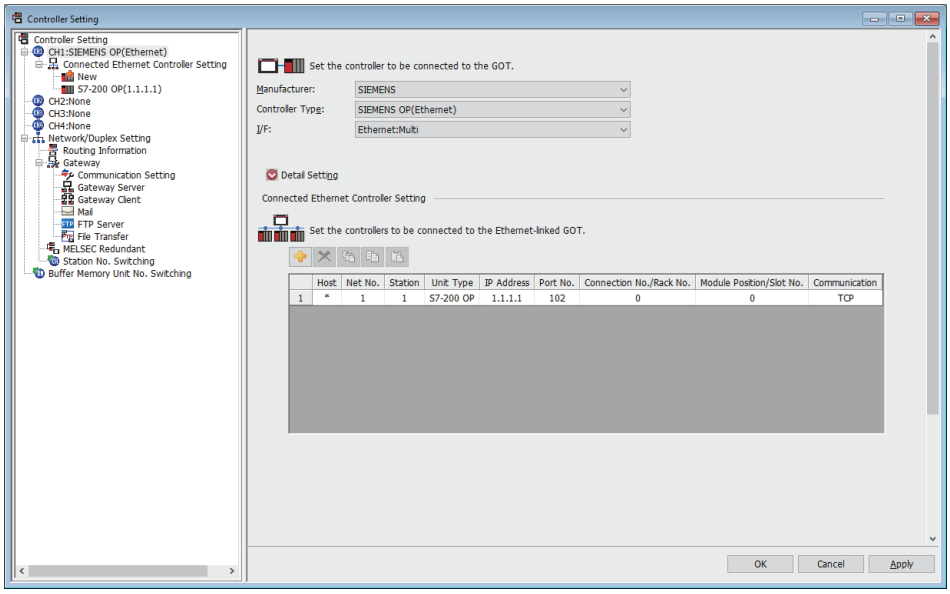

Item	Description	Set value
Host	The host is displayed. It refers to a station that can be connected without setting a station number. (The host is indicated with an asterisk (*).)	—
Net No.	Set the network No. of the connected Ethernet equipment. (Default: 1)	1 to 239
Station *1	Set the station No. of the connected Ethernet equipment. (Default: 1)	1 to 254
Unit Type	Set the PLC type to be connected.	S7-1500 OP S7-200 OP S7-200 SMART OP S7-300/400 OP S7-1200 OP
IP Address	Set the IP address of the connected Ethernet equipment. (Default: 0)	PLC side IP address
Port No.	102 (fixed)	102 (fixed)
Connection No./Rack No.	Set the Connection No./Rack No. set on the PLC side. (Default: 0)	S7-1500 OP: 0 (fixed) S7-200 OP: 0 to 7 S7-200 SMART OP:0 (fixed) S7-300/400 OP: 0 to 7 S7-1200 OP: 0 (fixed)
Module Position/Slot No.	Set the module position/slot No. set on the PLC side. (Default: 0 unless the setting value is fixed)	S7-1500 OP: 0 to 31 S7-200 OP: 0 to 6 S7-200 SMART OP:1 (fixed) S7-300/400 OP: 0 to 6 S7-1200 OP: 1 (fixed)
Communication	TCP (fixed)	TCP (fixed)

*1 Set different values for [GOT Station] of [Detail Setting] and [Station] of [Connected Ethernet Controller Setting].
☞ Page 524 Communication detail settings

Point

[Connected Ethernet Controller Setting] for GT21 and GS21

• Effective range of [Connected Ethernet Controller Setting]

Only [1] to [4] of [Connected Ethernet Controller Setting] can be used for GT21 and GS21.

If [5] onwards are used, the settings are invalid on GT21 and GS21.

• [Host] setting

Set [Host] within the range from [1] to [4] in [Connected Ethernet Controller Setting].

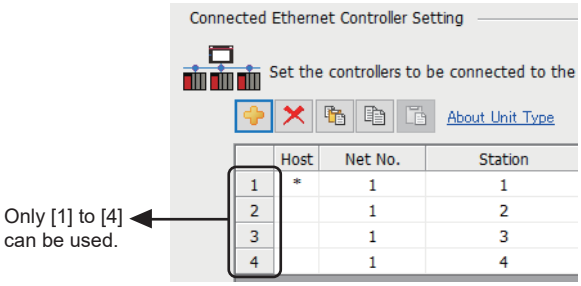

PLC side setting

Point

SIEMENS PLC

For details of SIEMENS PLCs, refer to the following manuals.

SIEMENS PLC user's Manual

Parameter settings

Set the following parameters with the SIEMENS software package.

■Ethernet connection type: FETCH/WRITE

• Settings of IP address and subnet mask

Item		Setting details	
Parameters		IP Address	PLC side IP address
		Subnet mask	PLC side subnet mask

• Fetch port setting

Item		Setting details	
Options	Mode	Select [Fetch passive].	
Addresses	IP(dec)	Local	PLC side IP address
		Remote	- (Default)
	PORT (dec)	Local	PLC side port No.
		Remote	- (Default)

• Write port setting

Item		Setting details	
Options	Mode	Select [Write passive].	
Addresses	IP(dec)	Local	PLC side IP address
		Remote	- (Default)
	PORT (dec)	Local	PLC side port No.
		Remote	- (Default)

• Precautions for setting

The Keep Alive function of the Siemens CP Module is not supported. Specify 0 for [Keep Alive].

■Ethernet connection type: OP communication

• S7-200

Set the following parameters.

Item	Setting details	
Module Position	Value in [Position] of the Ethernet module	
Module Address	IP Address	PLC side IP address
	Subnet mask	PLC side subnet mask
Number of connections to configure for this module	Set "1" as the number of connected GOT.	
This is a Server connection: Servers respond to connection request from remote clients.	Mark the check box.	
Local Properties (Server)	Select [Accept all connection requests]	
Remote Properties (Client)	Set "10.00" in [TSAP].	
Enable the Keep Alive function for this connection.	Unmark the check box.	

• S7-200 SMART

Set the following parameters.

Item	Setting details	
Ethernet addresses	IP Address	PLC side IP address
	Subnet mask	PLC side subnet mask

• S7-300/400

Set the following parameters.

When using the Ethernet module

Item	Setting details	
Properties	IP Address	PLC side IP address
	Subnet mask	PLC side subnet mask

When using the built-in Ethernet port

Item	Setting details	
Device name	Set [PN-IO]	
Properties	IP Address	PLC side IP address
	Subnet mask	PLC side subnet mask

• S7-1200

Set the following parameters.

Item	Setting details	
Ethernet addresses	IP Address	PLC side IP address
	Subnet mask	PLC side subnet mask

• S7-1500

Set the following parameters.

Item	Setting details	
Ethernet addresses	IP Address	PLC side IP address
	Subnet mask	PLC side subnet mask

Precautions

When connecting to multiple GOTs

■Setting Station

When connecting two or more GOTs in the Ethernet network, set each [Station] to the GOT.

☞ Page 525 Connected Ethernet Controller Setting

■Setting IP address

Do not use the IP address "192.168.0.18" when using multiple GOTs with the GOT 1000 series mixed.

A communication error may occur on the GOT with the IP address.

When setting IP address

Do not use "0" and "255" at the end of an IP address.

(Numbers of *.*.*.0 and *.*.*.255 are used by the system.)

The GOT may not monitor the controller correctly with the above numbers.

Consult with the administrator of the network before setting an IP address to the GOT and controller.

When connecting to the multiple network equipment (including GOT) in a segment

By increasing the network load, the transmission speed between the GOT and PLC may be reduced.

The following actions may improve the communication performance.

- Using a switching hub
- More high speed by 100BASE-TX (100Mbps)
- Reduction of the monitoring points on GOT

When monitoring a nonexistent or turned-off station

If a time-out occurs with the initial communication by monitoring a nonexistent or turned-off station, the time-out can delay the communication with the normally operating station.

Timing to start GOT communication

After the PLC starts up, start the GOT communication.

When the GOT starts communication before the PLC starts up, a communication timeout occurs.

Operations during communication

During normal communication, any operation which makes the GOT restart (including writing a project and changing utility data)may display the system alarm, "402 Communication timeout. Confirm communication pathway or modules.", when the GOT restarts.

When Ethernet connection type is OP communication

To monitor a device, permit the access to the device in the PLC side setting.

For details of SIEMENS PLCs, refer to the following manuals.

📖SIEMENS PLC user's Manual

16.4 Settable Device Range

For the device setting dialog and range of devices usable in the GOT, refer to the following.

☞ Page 639 SIEMENS equipment ([SIEMENS S7-200] or [SIEMENS S7-200(CN/SMART)])
☞ Page 644 SIEMENS equipment ([SIEMENS S7-300/400])
☞ Page 649 SIEMENS equipment ([SIEMENS S7(Ethernet)])
☞ Page 653 SIEMENS equipment ([SIEMENS OP(Ethernet)])

MEMO

17 HIRATA CORPORATION HNC CONTROLLER

For the connection to the HNC controller manufactured by Hirata Corporation, please contact our company.

MEMO

18 MURATEC CONTROLLER

For the connection to the MURATEC controller, please contact our company.

MEMO

APPENDIX

Appendix 1 Settable Device Range

This section describes the range of devices settable in GT Designer3 for each of non-Mitsubishi Electric products connected to the GOT.
The settable range varies with the selection for [Controller Type] in the [Controller Setting] window.
Configure the device setting according to the specifications of the controller to be used.
Device specifications differ depending on the controller model even among the controllers of the same series.
If a non-existent device or a device number out of the range is set for an object, other objects for which correct devices are set may not be monitored.

☞ Page 538 HITACHI IES equipment ([HITACHI IES EHV])
☞ Page 544 HITACHI IES equipment ([HITACHI IES HIDIC H])
☞ Page 549 HITACHI equipment ([HITACHI S10VE])
☞ Page 560 HITACHI equipment ([HITACHI S10mini/S10V])
☞ Page 567 FUJI equipment ([FUJI Temperature Controller/Digital Controller])
☞ Page 570 FUJI equipment ([FUJI MICREX-F])
☞ Page 576 FUJI equipment ([FUJI MICREX-SX SPH])
☞ Page 579 YASKAWA equipment ([YASKAWA GL/PROGIC8])
☞ Page 583 YASKAWA equipment ([YASKAWA CP9200(H)])
☞ Page 586 YASKAWA equipment ([YASKAWA CP9300MS(MC compatible)])
☞ Page 589 YASKAWA equipment ([YASKAWA MP2000/MP900/CP9200SH])
☞ Page 592 YASKAWA equipment ([YASKAWA MP3000])
☞ Page 595 YASKAWA equipment ([YASKAWA Robot Controller])
☞ Page 601 YOKOGAWA equipment ([YOKOGAWA STARDOM/FA500/FA-M3])
☞ Page 606 YOKOGAWA equipment ([YOKOGAWA GREEN/UT100/UT2000/UTAdvanced])
☞ Page 609 RKC equipment ([RKC SR Mini HG])
☞ Page 611 ALLEN-BRADLEY equipment ([AB SLC500])
☞ Page 614 ALLEN-BRADLEY equipment ([AB MicroLogix])
☞ Page 619 ALLEN-BRADLEY equipment ([AB MicroLogix (Extended)])
☞ Page 619 ALLEN-BRADLEY equipment ([AB Control/CompactLogix])
☞ Page 623 ALLEN-BRADLEY equipment ([AB Control/CompactLogix(Tag)])
☞ Page 624 GE equipment ([GE Series 90])
☞ Page 627 LS IS equipment ([LS Industrial Systems XGK])
☞ Page 631 LS IS equipment ([LS Industrial Systems MASTER-K])
☞ Page 635 MITSUBISHI INDIA equipment ([MEI Nexgenie])
☞ Page 638 SICK equipment ([SICK Flexi Soft])
☞ Page 639 SIEMENS equipment ([SIEMENS S7-200] or [SIEMENS S7-200(CN/SMART)])
☞ Page 644 SIEMENS equipment ([SIEMENS S7-300/400])
☞ Page 649 SIEMENS equipment ([SIEMENS S7(Ethernet)])
☞ Page 653 SIEMENS equipment ([SIEMENS OP(Ethernet)])

HITACHI IES equipment ([HITACHI IES EHV])

GT 27 GT 25 GT 23

Item	Reference
Device setting dialog	☞ Page 538 Device setting dialog ([HITACHI IES EHV])
Specifications of bit devices	☞ Page 539 Monitoring-supported bit devices ([HITACHI IES EHV])
	☞ Page 541 Availability of writing/reading data to/from bit devices ([HITACHI IES EHV])
Specifications of word devices	☞ Page 542 Monitoring-supported word devices ([HITACHI IES EHV])
	☞ Page 543 Availability of writing/reading data to/from word devices ([HITACHI IES EHV])

Device setting dialog ([HITACHI IES EHV])

Set a device to be monitored.

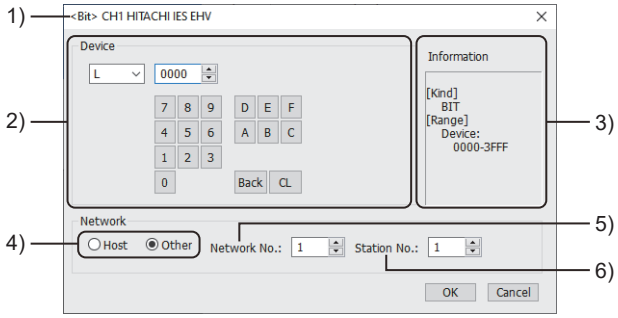

1) Title

Data type and channel number of the device to be set

2) [Device]

Set the device name and device number.

If a bit number needs to be specified, the setting item is displayed.

Example) Setting of L0000

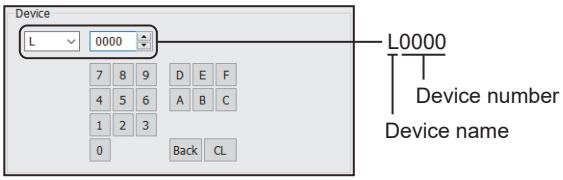

3) [Information]

Displays the setting range of each setting item according to the selected device.

4) Station type specification

Select the station type (host or other) for the controller to be monitored.

- [Host]: The controller to be monitored is the host station.
- [Other]: The controller to be monitored is not the host station.

5) [Network No.]

This item appears when [Other] is selected for the station type.

Specify a network number.

The setting range is [1] to [239].

6) [Station No.]

This item appears when [Other] is selected for the station type.

Specify a station number.

The setting range is [1] to [254].

Monitoring-supported bit devices ([HITACHI IES EHV])

The following table shows monitoring-supported bit devices.

To check whether writing/reading data to/from each device is available, refer to the following.

☞ Page 541 Availability of writing/reading data to/from bit devices ([HITACHI IES EHV])

For the formats of devices, refer to the following.

GT Designer3 (GOT2000) Screen Design Manual

○: Available

×: Not available

Device name		Device No. representation	Setting range	Specifications of EG devices*1	
				Assignment to EG devices	Access using a client
X*2	External input	Decimal + decimal + hexadecimal + decimal	X(Remote No.)(Unit No.)(Slot No.)(Module bit No.) Notation example: X05A95 • Remote No. (decimal): 0 • Unit No. (decimal): 0 to 5 • Slot No. (hexadecimal): 0 to A • Module bit No. (decimal): 00 to 95	○	○
	Remote external input	Decimal + decimal + hexadecimal + decimal	X(Remote No.)(Remote slave station)(Slot No.)(Module bit No.) Notation example: X19A95 • Remote No. (Remote master station) (decimal): 1 to 4 • Remote slave station (decimal): 0 to 9 • Slot No. (hexadecimal): 0 to A • Module bit No. (decimal): 00 to 95		
Y*2	External output	Decimal + decimal + hexadecimal + decimal	Y(Remote No.)(Unit No.)(Slot No.)(Module bit No.) Notation example: Y05A95 • Remote No. (decimal): 0 • Unit No. (decimal): 0 to 5 • Slot No. (hexadecimal): 0 to A • Module bit No. (decimal): 00 to 95	○	○
	Remote external output	Decimal + decimal + hexadecimal + decimal	Y(Remote No.)(Remote slave station)(Slot No.)(Module bit No.) Notation example: Y19A95 • Remote No. (Remote master station) (decimal): 1 to 4 • Remote slave station (decimal): 0 to 9 • Slot No. (hexadecimal): 0 to A • Module bit No. (decimal): 00 to 95		
L	1st CPU link	Hexadecimal	0000 to 3FFF	○	○
M	Data area	Hexadecimal	00000 to 7FFFF	○	○
TD	On-delay timer	Decimal	0 to 2559	○	○ (Not usable as word data)
CU	Up counter	Decimal	0 to 511	○	○ (Not usable as word data)
L1	2nd CPU link	Hexadecimal	0000 to 3FFF	○	○
SS	Single-shot timer	Decimal	0 to 2559	○	○ (Not usable as word data)
WDT	Watchdog timer	Decimal	0 to 2559	○	○ (Not usable as word data)
MS	Monostable timer	Decimal	0 to 2559	○	○ (Not usable as word data)
TMR	Retentive timer	Decimal	0 to 2559	○	○ (Not usable as word data)

Device name		Device No. representation	Setting range	Specifications of EG devices*1	
				Assignment to EG devices	Access using a client
RCU	Ring counter	Decimal	0 to 511	○	○ (Not usable as word data)
CT	Up/Down counter	Decimal	0 to 511	○	○ (Not usable as word data)
R	Bit internal output	Hexadecimal	000 to 7BF	○	○ (Not usable as word data)
EX	Extended external input	Decimal + hexadecimal + hexadecimal	EX(Unit No.)(Slot No.)(Module bit No.) Notation example: EX5A7FF • Unit No. (decimal): 0 to 5 • Slot No. (hexadecimal): 0 to A • Module bit No. (hexadecimal): 000 to 7FF	○	○
EY	Extended external output	Decimal + hexadecimal + hexadecimal	EY(Unit No.)(Slot No.)(Module bit No.) Notation example: EY5A7FF • Unit No. (decimal): 0 to 5 • Slot No. (hexadecimal): 0 to A • Module bit No. (hexadecimal): 000 to 7FF	○	○
TDN	Off-delay timer	Decimal	0 to 2559	○	○ (Not usable as word data)
CTU	Up coil up/down counter	Decimal	0 to 511	○	○ (Not usable as word data)
CTD	Down coil up/down counter	Decimal	0 to 511	○	○ (Not usable as word data)
CL	Counter clear	Decimal	0 to 2559	○	○ (Not usable as word data)
L2	3rd CPU link	Hexadecimal	0000 to 3FFF	○	○
L3	4th CPU link	Hexadecimal	0000 to 3FFF	○	○
L4	5th CPU link	Hexadecimal	0000 to 3FFF	○	○
L5	6th CPU link	Hexadecimal	0000 to 3FFF	○	○
L6	7th CPU link	Hexadecimal	0000 to 3FFF	○	○
L7	8th CPU link	Hexadecimal	0000 to 3FFF	○	○

*1 For the devices assigned to EG devices (gateway devices) and the compatible clients, refer to the following.
GT Designer3 (GOT2000) Screen Design Manual

*2 Do not use a device range containing a device number to which I/O is not assigned.
If used, a device range error occurs during writing/reading, which results in system alarm 322.

Availability of writing/reading data to/from bit devices ([HITACHI IES EHV])

The following shows whether writing/reading data to/from bit devices is available by device type.

When the device type is other than the bit type, set the device No. in multiples of 16.

R/W: Both read and write

R/-: Read only

-/W: Write only

-/-: No read/write access

Device name	Device type				
	Bit	Byte (8 bits)	Word (16 bits)	Double-word (32 bits)	Quad-word (64 bits)
X	R/W	-/-	-/-	-/-	-/-
Y	R/W	-/-	-/-	-/-	-/-
L	R/W	-/-	-/-	-/-	-/-
M	R/W	-/-	-/-	-/-	-/-
TD	R/W	-/-	-/-	-/-	-/-
CU	R/W	-/-	-/-	-/-	-/-
L1	R/W	-/-	-/-	-/-	-/-
SS	R/W	-/-	-/-	-/-	-/-
WDT	R/W	-/-	-/-	-/-	-/-
MS	R/W	-/-	-/-	-/-	-/-
TMR	R/W	-/-	-/-	-/-	-/-
RCU	R/W	-/-	-/-	-/-	-/-
CT	R/W	-/-	-/-	-/-	-/-
R	R/W	-/-	-/-	-/-	-/-
EX	R/W	-/-	-/-	-/-	-/-
EY	R/W	-/-	-/-	-/-	-/-
TDN	R/W	-/-	-/-	-/-	-/-
CTU	R/W	-/-	-/-	-/-	-/-
CTD	R/W	-/-	-/-	-/-	-/-
CL	R/W	-/-	-/-	-/-	-/-
L2	R/W	-/-	-/-	-/-	-/-
L3	R/W	-/-	-/-	-/-	-/-
L4	R/W	-/-	-/-	-/-	-/-
L5	R/W	-/-	-/-	-/-	-/-
L6	R/W	-/-	-/-	-/-	-/-
L7	R/W	-/-	-/-	-/-	-/-

Monitoring-supported word devices ([HITACHI IES EHV])

The following table shows monitoring-supported word devices.

To check whether writing/reading data to/from each device is available, refer to the following.

☞ Page 543 Availability of writing/reading data to/from word devices ([HITACHI IES EHV])

For the formats of devices, refer to the following.

GT Designer3 (GOT2000) Screen Design Manual

○: Available

×: Not available

Device name		Device No. representation	Setting range	Specifications of EG devices*1	
				Assignment to EG devices	Access using a client
TC	Timer/Counter (Elapsed value)	Decimal	0 to 2559	○	○
WR	Word internal output	Hexadecimal	0000 to EFFF	○	○
WX*2	External input	Decimal + decimal + hexadecimal + decimal	WX(Remote No.)(Unit No.)(Slot No.)(Module bit No.) Notation example: WX05A7 • Remote No. (decimal): 0 • Unit No. (decimal): 0 to 5 • Slot No. (hexadecimal): 0 to A • Module bit No. (decimal): 0 to 7	○	○
	Remote external input	Decimal + decimal + hexadecimal + decimal	WX(Remote No.)(Remote slave station)(Slot No.)(Module bit No.) Notation example: WX19A7 • Remote No. (Remote master station) (decimal): 1 to 4 • Remote slave station (decimal): 0 to 9 • Slot No. (hexadecimal): 0 to A • Module bit No. (decimal): 0 to 7	○	○
WY*2	External output	Decimal + decimal + hexadecimal + decimal	WY(Remote No.)(Unit No.)(Slot No.)(Module bit No.) Notation example: WY05A7 • Remote No. (decimal): 0 • Unit No. (decimal): 0 to 5 • Slot No. (hexadecimal): 0 to A • Module bit No. (decimal): 0 to 7	○	○
	Remote external output	Decimal + decimal + hexadecimal + decimal	WY(Remote No.)(Remote slave station)(Slot No.)(Module bit No.) Notation example: WY19A7 • Remote No. (Remote master station) (decimal): 1 to 4 • Remote slave station (decimal): 0 to 9 • Slot No. (hexadecimal): 0 to A • Module bit No. (decimal): 0 to 7	○	○
WL1	2nd CPU link	Hexadecimal	000 to 3FF	○	○
WL	1st CPU link	Hexadecimal	000 to 3FF	○	○
WM	Data area	Hexadecimal	0000 to 7FFF	○	○
WEX	Extended external input	Decimal + hexadecimal + hexadecimal	WEX(Unit No.)(Slot No.)(Module bit No.) Notation example: WEX5A7F • Unit No. (decimal): 0 to 5 • Slot No. (hexadecimal): 0 to A • Module bit No. (hexadecimal): 00 to 7F	○	○
WEY	Extended external output	Decimal + hexadecimal + hexadecimal	WEY(Unit No.)(Slot No.)(Module bit No.) Notation example: WEY5A7F • Unit No. (decimal): 0 to 5 • Slot No. (hexadecimal): 0 to A • Module bit No. (hexadecimal): 00 to 7F	○	○
WN	Internal output	Hexadecimal	00000 to 1FFFF	○	○
WL2	3rd CPU link	Hexadecimal	000 to 3FF	○	○
WL3	4th CPU link	Hexadecimal	000 to 3FF	○	○
WL4	5th CPU link	Hexadecimal	000 to 3FF	○	○
WL5	6th CPU link	Hexadecimal	000 to 3FF	○	○
WL6	7th CPU link	Hexadecimal	000 to 3FF	○	○

Device name		Device No. representation	Setting range	Specifications of EG devices*1	
				Assignment to EG devices	Access using a client
WL7	8th CPU link	Hexadecimal	000 to 3FF	○	○

*1 For the devices assigned to EG devices (gateway devices) and the compatible clients, refer to the following.
GT Designer3 (GOT2000) Screen Design Manual

*2 Do not use a device range containing a device number to which I/O is not assigned.
If used, a device range error occurs during writing/reading, which results in system alarm 322.

Availability of writing/reading data to/from word devices ([HITACHI IES EHV])

The following shows whether writing/reading data to/from word devices is available by device type.

R/W: Both read and write

R/-: Read only

-/W: Write only

-/-: No read/write access

Device name	Device type			
	Word (16 bits)	Double-word (32 bits)	Quad-word (64 bits)	Bit of word data
TC	R/W	R/W	-/-	-/-
WR	R/W	R/W	-/-	R/W
WX	R/W	R/W	-/-	-/-
WY	R/W	R/W	-/-	-/-
WL1	R/W	R/W	-/-	-/-
WL	R/W	R/W	-/-	-/-
WM	R/W	R/W	-/-	-/-
WEX	R/W	R/W	-/-	-/-
WEY	R/W	R/W	-/-	-/-
WN	R/W	R/W	-/-	R/W
WL2	R/W	R/W	-/-	-/-
WL3	R/W	R/W	-/-	-/-
WL4	R/W	R/W	-/-	-/-
WL5	R/W	R/W	-/-	-/-
WL6	R/W	R/W	-/-	-/-
WL7	R/W	R/W	-/-	-/-

HITACHI IES equipment ([HITACHI IES HIDIC H])

GT 27 GT 25 GT 23

Item	Reference
Device setting dialog	☞ Page 544 Device setting dialog ([HITACHI IES HIDIC H])
Specifications of bit devices	☞ Page 545 Monitoring-supported bit devices ([HITACHI IES HIDIC H])
	☞ Page 546 Availability of writing/reading data to/from bit devices ([HITACHI IES HIDIC H])
Specifications of word devices	☞ Page 547 Monitoring-supported word devices ([HITACHI IES HIDIC H])
	☞ Page 548 Availability of writing/reading data to/from word devices ([HITACHI IES HIDIC H])

Device setting dialog ([HITACHI IES HIDIC H])

Set a device to be monitored.

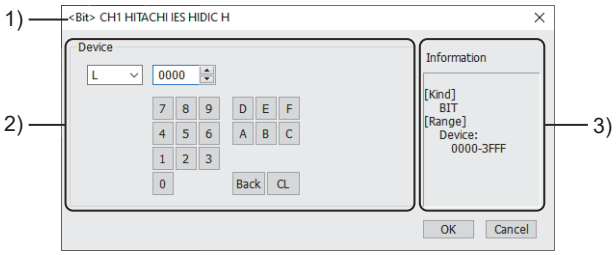

1) Title

Data type and channel number of the device to be set

2) [Device]

Set the device name and device number.

If a bit number needs to be specified, the setting item is displayed.

Example) Setting of L0000

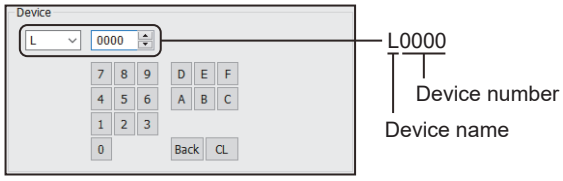

3) [Information]

Displays the setting range of each setting item according to the selected device.

Monitoring-supported bit devices ([HITACHI IES HIDIC H])

The following table shows monitoring-supported bit devices.

Do not set device outside the range.

If the set device is outside the range, the object set by the device within the range cannot be displayed.

To check whether writing/reading data to/from each device is available, refer to the following.

☞ Page 546 Availability of writing/reading data to/from bit devices ([HITACHI IES HIDIC H])

For the formats of devices, refer to the following.

📖GT Designer3 (GOT2000) Screen Design Manual

○: Available

×: Not available

Device name		Device No. representation	Setting range	Specifications of EG devices*1	
				Assignment to EG devices	Access using a client
X*2	External input	Decimal + decimal + hexadecimal + decimal	X(Remote No.)(Module No.)(Slot No.)(Module bit No.) Notation example: X05A95 • Remote No. (decimal): 0 • Unit No. (decimal): 0 to 5 • Slot No. (hexadecimal): 0 to A • Module bit No. (decimal): 00 to 95	○	○
	Remote external input	Decimal + decimal + decimal + decimal	X(Remote No.)(Remote slave station)(Slot No.)(Module bit No.) Notation example: X19995 • Remote No. (Remote master station) (decimal): 1 to 4 • Remote slave station (decimal): 0 to 9 • Slot No. (decimal): 0 to 9 • Module bit No. (decimal): 00 to 95		
Y*2	External output	Decimal + decimal + hexadecimal + decimal	Y(Remote No.)(Module No.)(Slot No.)(Module bit No.) Notation example: Y05A95 • Remote No. (decimal): 0 • Unit No. (hexadecimal): 0 to 5 • Slot No. (hexadecimal): 0 to A • Module bit No. (decimal): 00 to 95	○	○
	Remote external output	Decimal + decimal + decimal + decimal	Y(Remote No.)(Remote slave station)(Slot No.)(Module bit No.) Notation example: Y19995 • Remote No. (Remote master station) (decimal): 1 to 4 • Remote slave station (decimal): 0 to 9 • Slot No. (hexadecimal): 0 to 9 • Module bit No. (decimal): 00 to 95		
L	1st CPU link	Hexadecimal	0000 to 3FFF	○	○
M	Data area	Hexadecimal	0000 to 3FFF	○	○
TD*3	On-delay timer	Decimal	0 to 1023	○	○ (Not usable as word data)
CU*3	Up counter	Decimal	0 to 2047	○	○ (Not usable as word data)
L1	2nd CPU link	Hexadecimal	0000 to 3FFF	○	○
SS*3	Single-shot timer	Decimal	0 to 1023	○	○ (Not usable as word data)
WDT*3	Watchdog timer	Decimal	0 to 1023	○	○ (Not usable as word data)
MS*3	Monostable timer	Decimal	0 to 1023	○	○ (Not usable as word data)
TMR*3	Retentive timer	Decimal	0 to 1023	○	○ (Not usable as word data)

Device name		Device No. representation	Setting range	Specifications of EG devices*1	
				Assignment to EG devices	Access using a client
RCU*3	Ring counter	Decimal	0 to 2047	○	○ (Not usable as word data)
CT*3	Up/Down counter	Decimal	0 to 2047	○	○ (Not usable as word data)
R	Bit internal output	Hexadecimal	000 to 7BF	○	○ (Not usable as word data)
DIF	Rising edge detection	Decimal	0 to 511	○	○ (Not usable as word data)
DFN	Falling edge detection	Decimal	0 to 511	○	○ (Not usable as word data)

*1 For the devices assigned to EG devices (gateway devices) and the compatible clients, refer to the following.
GT Designer3 (GOT2000) Screen Design Manual

*2 Do not use a device range containing a device number to which I/O is not assigned.
Writing/reading is not performed normally.

*3 The same number cannot be used repeatedly.

Availability of writing/reading data to/from bit devices ([HITACHI IES HIDIC H])

The following shows whether writing/reading data to/from bit devices is available by device type.

When the device type is other than the bit type, set the device No. in multiples of 16.

R/W: Both read and write

R/-: Read only

-/W: Write only

-/-: No read/write access

Device name	Device type				
	Bit	Byte (8 bits)	Word (16 bits)	Double-word (32 bits)	Quad-word (64 bits)
X	R/W	-/-	-/-	-/-	-/-
Y	R/W	-/-	-/-	-/-	-/-
L	R/W	-/-	-/-	-/-	-/-
M	R/W	-/-	-/-	-/-	-/-
TD	R/W	-/-	-/-	-/-	-/-
CU	R/W	-/-	-/-	-/-	-/-
L1	R/W	-/-	-/-	-/-	-/-
SS	R/W	-/-	-/-	-/-	-/-
WDT	R/W	-/-	-/-	-/-	-/-
MS	R/W	-/-	-/-	-/-	-/-
TMR	R/W	-/-	-/-	-/-	-/-
RCU	R/W	-/-	-/-	-/-	-/-
CT	R/W	-/-	-/-	-/-	-/-
R	R/W	-/-	-/-	-/-	-/-
DIF	R/W	-/-	-/-	-/-	-/-
DFN	R/W	-/-	-/-	-/-	-/-

Monitoring-supported word devices ([HITACHI IES HIDIC H])

The following table shows monitoring-supported word devices.

Do not set device outside the range.

If the set device is outside the range, the object set by the device within the range cannot be displayed.

To check whether writing/reading data to/from each device is available, refer to the following.

☞ Page 548 Availability of writing/reading data to/from word devices ([HITACHI IES HIDIC H])

For the formats of devices, refer to the following.

📖GT Designer3 (GOT2000) Screen Design Manual

○: Available

×: Not available

Device name		Device No. representation	Setting range	Specifications of EG devices*1	
				Assignment to EG devices	Access using a client
TC*2	Timer/Counter (Elapsed value)	Decimal	0000 to 2047	○	○
WR	Word internal output	Hexadecimal	0000 to C3FF	○	○
WX*3	External input	Decimal + decimal + hexadecimal + decimal	WX(Remote No.)(Module No.)(Slot No.)(Module bit No.) Notation example: WX05A7 • Remote No. (decimal): 0 • Unit No. (decimal): 0 to 5 • Slot No. (hexadecimal): 0 to A • Module bit No. (decimal): 0 to 7	○	○
	Remote external input	Decimal + decimal + decimal + decimal	WX(Remote No.)(Remote slave station)(Slot No.)(Module bit No.) Notation example: WX1997 • Remote No. (Remote master station) (decimal): 1 to 4 • Remote slave station (decimal): 0 to 9 • Slot No. (decimal): 0 to 9 • Module bit No. (decimal): 0 to 7	○	○
WY*3	External output	Decimal + decimal + hexadecimal + decimal	WY(Remote No.)(Module No.)(Slot No.)(Module bit No.) Notation example: WY05A7 • Remote No. (decimal): 0 • Unit No. (hexadecimal): 0 to 5 • Slot No. (hexadecimal): 0 to A • Module bit No. (decimal): 0 to 7	○	○
	Remote external output	Decimal + decimal + decimal + decimal	WY(Remote No.)(Remote slave station)(Slot No.)(Module bit No.) Notation example: WY1997 • Remote No. (Remote master station) (decimal): 1 to 4 • Remote slave station (decimal): 0 to 9 • Slot No. (hexadecimal): 0 to 9 • Module bit No. (decimal): 0 to 7	○	○
WL1	Second CPU link	Hexadecimal	000 to 3FF	○	○
WL	First CPU link	Hexadecimal	000 to 3FF	○	○
WM	Data area	Hexadecimal	000 to 3FF	○	○

*1 For the devices assigned to EG devices (gateway devices) and the compatible clients, refer to the following.
📖GT Designer3 (GOT2000) Screen Design Manual

*2 The same number cannot be used repeatedly.

*3 Do not use a device range containing a device number to which I/O is not assigned.
Writing/reading is not performed normally.

Availability of writing/reading data to/from word devices ([HITACHI IES HIDIC H])

The following shows whether writing/reading data to/from word devices is available by device type.

R/W: Both read and write

R/-: Read only

-/W: Write only

-/-: No read/write access

Device name	Device type			
	Word (16 bits)	Double-word (32 bits)	Quad-word (64 bits)	Bit of word data
TC	R/W	R/W	-/-	R/W
WR	R/W	R/W	-/-	R/W
WX	R/W	R/W	-/-	-/-
WY	R/W	R/W	-/-	-/-
WL1	R/W	R/W	-/-	-/-
WL	R/W	R/W	-/-	-/-
WM	R/W	R/W	-/-	-/-

HITACHI equipment ([HITACHI S10VE])

GT 27 GT 25 GT 23

Item	Reference
Device setting dialog	☞ Page 549 Device setting dialog ([HITACHI S10VE])
Specifications of bit devices	☞ Page 550 Monitoring-supported bit devices ([HITACHI S10VE])
	☞ Page 552 Availability of writing/reading data to/from bit devices ([HITACHI S10VE])
Specifications of word devices	☞ Page 553 Monitoring-supported word devices ([HITACHI S10VE])
	☞ Page 556 Availability of writing/reading data to/from word devices ([HITACHI S10VE])
Specifications of double-word devices	☞ Page 557 Monitoring-supported double-word devices ([HITACHI S10VE])
	☞ Page 559 Availability of writing/reading data to/from double-word devices ([HITACHI S10VE])

Device setting dialog ([HITACHI S10VE])

Set a device to be monitored.

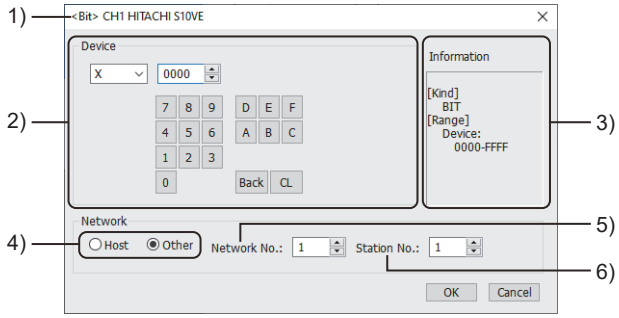

1) Title

Data type and channel number of the device to be set

2) [Device]

Set the device name and device number.

If a bit number needs to be specified, the setting item is displayed.

Example) Setting of X0000

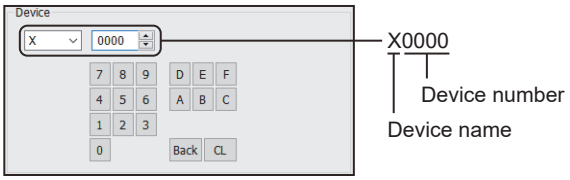

3) [Information]

Displays the setting range of each setting item according to the selected device.

4) Station type specification

Select the station type (host or other) for the controller to be monitored.

- [Host]: The controller to be monitored is the host station.
- [Other]: The controller to be monitored is not the host station.

5) [Network No.]

This item appears when [Other] is selected for the station type.

Specify a network number.

6) [Station No.]

This item appears when [Other] is selected for the station type.

Specify a station number.

Monitoring-supported bit devices ([HITACHI S10VE])

The following table shows monitoring-supported bit devices.

To check whether writing/reading data to/from each device is available, refer to the following.

☞ Page 552 Availability of writing/reading data to/from bit devices ([HITACHI S10VE])

For the formats of devices, refer to the following.

GT Designer3 (GOT2000) Screen Design Manual

○: Available

×: Not available

Device name		Device No. representation	Setting range	Specifications of EG devices*1	
				Assignment to EG devices	Access using a client
X	External input	Hexadecimal	X(Address)(Bit position) Notation example: XFFF0 • Address (word unit) (hexadecimal): 000 to FFF • Bit position (hexadecimal): 0 to F	○	○ (Not usable as word data)
Y	External output	Hexadecimal	Y(Address)(Bit position) Notation example: YFFF0 • Address (word unit) (hexadecimal): 000 to FFF • Bit position (hexadecimal): 0 to F	○	○ (Not usable as word data)
GL*2	Global link register	Hexadecimal	GL(Address)(Bit position) Notation example: GLFF0 • Address (word unit) (hexadecimal): 00 to FF • Bit position (hexadecimal): 0 to F	○	○ (Not usable as word data)
R	Internal register	Hexadecimal	R(Address)(Bit position) Notation example: RFF0 • Address (word unit) (hexadecimal): 00 to FF • Bit position (hexadecimal): 0 to F	○	○ (Not usable as word data)
K	Keep relay	Hexadecimal	K(Address)(Bit position) Notation example: KFF0 • Address (word unit) (hexadecimal): 00 to FF • Bit position (hexadecimal): 0 to F	○	○ (Not usable as word data)
E	Event register	Hexadecimal	E(Address)(Bit position) Notation example: EFFF0 • Address (word unit) (hexadecimal): 000 to FFF • Bit position (hexadecimal): 0 to F	○	○ (Not usable as word data)
T	On-delay timer	Hexadecimal	T(Address)(Bit position) Notation example: T7F0 • Address (word unit) (hexadecimal): 00 to 7F • Bit position (hexadecimal): 0 to F	○	○ (Not usable as word data)
C	Up-down counter	Hexadecimal	C(Address)(Bit position) Notation example: CF0 • Address (word unit) (hexadecimal): 0 to F • Bit position (hexadecimal): 0 to F	○	○ (Not usable as word data)
U	One-shot timer	Hexadecimal	U(Address)(Bit position) Notation example: U0F0 • Address (word unit) (hexadecimal): 00 to 0F • Bit position (hexadecimal): 0 to F	○	○ (Not usable as word data)
M	Extended internal register	Hexadecimal	M(Address)(Bit position) Notation example: MFFF0 • Address (word unit) (hexadecimal): 000 to FFF • Bit position (hexadecimal): 0 to F	○	○ (Not usable as word data)
A	Extended internal register	Hexadecimal	A(Address)(Bit position) Notation example: AFF0 • Address (word unit) (hexadecimal): 00 to FF • Bit position (hexadecimal): 0 to F	○	○ (Not usable as word data)
S	System register	Hexadecimal	S(Address)(Bit position) Notation example: SBFF0 • Address (word unit) (hexadecimal): 000 to BFF • Bit position (hexadecimal): 0 to F	○	○ (Not usable as word data)
J	Transfer register	Hexadecimal	J(Address)(Bit position) Notation example: JFF0 • Address (word unit) (hexadecimal): 00 to FF • Bit position (hexadecimal): 0 to F	○	○ (Not usable as word data)

Device name		Device No. representation	Setting range	Specifications of EG devices*1	
				Assignment to EG devices	Access using a client
Q	Receive register	Hexadecimal	Q(Address)(Bit position) Notation example: QFFF0 • Address (word unit) (hexadecimal): 000 to FFF • Bit position (hexadecimal): 0 to F	○	○ (Not usable as word data)
LB	Extended internal register	Hexadecimal	LB(Address)(Bit position) Notation example: LBFFF0 • Address (word unit) (hexadecimal): 000 to FFF • Bit position (hexadecimal): 0 to F	○	○ (Not usable as word data)
LR	Converter-specific internal register	Hexadecimal	LR(Address)(Bit position) Notation example: LR0FF0 • Address (word unit) (hexadecimal): 000 to 0FF • Bit position (hexadecimal): 0 to F	○	○ (Not usable as word data)
LV	Converter-specific edge contact register	Hexadecimal	LV(Address)(Bit position) Notation example: LV0FF0 • Address (word unit) (hexadecimal): 000 to 0FF • Bit position (hexadecimal): 0 to F	○	○ (Not usable as word data)
P	Process register	Hexadecimal	P(Address)(Bit position) Notation example: P080 • Address (word unit) (hexadecimal): 00 to 08 • Bit position (hexadecimal): 0 to F (Set 1 when the address is 00. Set 0 when the address is 08.)	○	○ (Not usable as word data)
V	Edge contact	Hexadecimal	V(Address)(Bit position) Notation example: VFF0 • Address (word unit) (hexadecimal): 00 to FF • Bit position (hexadecimal): 0 to F	○	○ (Not usable as word data)
CU	Up-down counter (up counter)	Hexadecimal	00 to FF	○	○ (Not usable as word data)
CD	Up-down counter (down counter)	Hexadecimal	00 to FF	○	○ (Not usable as word data)
CR	Up-down counter (reset)	Hexadecimal	00 to FF	○	○ (Not usable as word data)
NM	Nesting coil (master control)	Hexadecimal	00 to FF	○	○ (Not usable as word data)
NZ	Nesting coil (zone control)	Hexadecimal	00 to FF	○	○ (Not usable as word data)
N	Nesting coil	Hexadecimal	N(Address)(Bit position) Notation example: NF0 • Address (word unit) (hexadecimal): 0 to F • Bit position (hexadecimal): 0 to F	○	○ (Not usable as word data)

*1 For the devices assigned to EG devices (gateway devices) and the compatible clients, refer to the following.
GT Designer3 (GOT2000) Screen Design Manual

*2 The global link register (GL) corresponds to the global link register (G) of the PLU CPU.

Availability of writing/reading data to/from bit devices ([HITACHI S10VE])

The following shows whether writing/reading data to/from bit devices is available by device type.

When the device type is other than the bit type, set the device No. in multiples of 16.

R/W: Both read and write

R/-: Read only

-/W: Write only

-/-: No read/write access

Device name	Device type				
	Bit	Byte (8 bits)	Word (16 bits)	Double-word (32 bits)	Quad-word (64 bits)
X	R/W	-/-	-/-	-/-	-/-
Y	R/W	-/-	-/-	-/-	-/-
GL	R/W	-/-	-/-	-/-	-/-
R	R/W	-/-	-/-	-/-	-/-
K	R/W	-/-	-/-	-/-	-/-
E	R/W	-/-	-/-	-/-	-/-
T	R/W	-/-	-/-	-/-	-/-
C	R/W	-/-	-/-	-/-	-/-
U	R/W	-/-	-/-	-/-	-/-
M	R/W	-/-	-/-	-/-	-/-
A	R/W	-/-	-/-	-/-	-/-
S	R/-	-/-	-/-	-/-	-/-
J	R/W	-/-	-/-	-/-	-/-
Q	R/W	-/-	-/-	-/-	-/-
LB	R/W	-/-	-/-	-/-	-/-
LR	R/W	-/-	-/-	-/-	-/-
LV	R/W	-/-	-/-	-/-	-/-
P	R/W	-/-	-/-	-/-	-/-
V	R/W	-/-	-/-	-/-	-/-
CU	R/W	-/-	-/-	-/-	-/-
CD	R/W	-/-	-/-	-/-	-/-
CR	R/W	-/-	-/-	-/-	-/-
NM	R/W	-/-	-/-	-/-	-/-
NZ	R/W	-/-	-/-	-/-	-/-
N	R/W	-/-	-/-	-/-	-/-

Monitoring-supported word devices ([HITACHI S10VE])

The following table shows monitoring-supported word devices.

To check whether writing/reading data to/from each device is available, refer to the following.

☞ Page 556 Availability of writing/reading data to/from word devices ([HITACHI S10VE])

For the formats of devices, refer to the following.

GT Designer3 (GOT2000) Screen Design Manual

○: Available

×: Not available

Device name		Device No. representation	Setting range	Specifications of EG devices*1	
				Assignment to EG devices	Access using a client
TC	On-delay timer (count value)	Hexadecimal	000 to 1FF	○	○ (Not usable as bit data)
CC	Up-down counter (count value)	Hexadecimal	000 to 0FF	○	○ (Not usable as bit data)
UC	One-shot timer (count value)	Hexadecimal	000 to 0FF	○	○ (Not usable as bit data)
DW*2	Function data register	Hexadecimal	000 to FFF	○	○
AW	Extension internal register	Hexadecimal	AW(Address)(Bit position) Notation example: AWFF0 • Address (word unit) (hexadecimal): 00 to FF • Bit position (hexadecimal): 0	○	○ (Not usable as bit data)
SW	System register	Hexadecimal	SW(Address)(Bit position) Notation example: SWBFF0 • Address (word unit) (hexadecimal): 000 to BFF • Bit position (hexadecimal): 0	○	○ (Not usable as bit data)
JW	Transfer register	Hexadecimal	JW(Address)(Bit position) Notation example: JWFF0 • Address (word unit) (hexadecimal): 00 to FF • Bit position (hexadecimal): 0	○	○ (Not usable as bit data)
QW	Receive register	Hexadecimal	QW(Address)(Bit position) Notation example: QWFFF0 • Address (word unit) (hexadecimal): 000 to FFF • Bit position (hexadecimal): 0	○	○ (Not usable as bit data)
TS	On-delay timer (set value)	Hexadecimal	000 to 1FF	○	○ (Not usable as bit data)
US	One-shot timer (set value)	Hexadecimal	000 to 0FF	○	○ (Not usable as bit data)
CS	Up-down counter (set value)	Hexadecimal	000 to 0FF	○	○ (Not usable as bit data)
FW*2	Function work register	Hexadecimal	000 to BFF	○	○
LWW*2	Extension function work register	Hexadecimal	0000 to FFFF	○	○
LXW*2	Backup work register	Hexadecimal	0000 to 3FFF	○	○
XW	External input	Hexadecimal	XW(Address)(Bit position) Notation example: XWFFF0 • Address (word unit) (hexadecimal): 000 to FFF • Bit position (hexadecimal): 0	○	○ (Not usable as bit data)
YW	External output	Hexadecimal	YW(Address)(Bit position) Notation example: YWFFF0 • Address (word unit) (hexadecimal): 000 to FFF • Bit position (hexadecimal): 0	○	○ (Not usable as bit data)

Device name		Device No. representation	Setting range	Specifications of EG devices[*1]	
				Assignment to EG devices	Access using a client
RW	Internal register	Hexadecimal	RW(Address)(Bit position) Notation example: RWFF0 • Address (word unit) (hexadecimal): 00 to FF • Bit position (hexadecimal): 0	○	○ (Not usable as bit data)
MW	Extension internal register	Hexadecimal	MW(Address)(Bit position) Notation example: MWFFF0 • Address (word unit) (hexadecimal): 000 to FFF • Bit position (hexadecimal): 0	○	○ (Not usable as bit data)
KW	Keep relay	Hexadecimal	KW(Address)(Bit position) Notation example: KWFF0 • Address (word unit) (hexadecimal): 00 to FF • Bit position (hexadecimal): 0	○	○ (Not usable as bit data)
TW	On-delay timer	Hexadecimal	TW(Address)(Bit position) Notation example: TW7F0 • Address (word unit) (hexadecimal): 00 to 7F • Bit position (hexadecimal): 0	○	○ (Not usable as bit data)
UW	One-shot timer	Hexadecimal	UW(Address)(Bit position) Notation example: UW0F0 • Address (word unit) (hexadecimal): 00 to 0F • Bit position (hexadecimal): 0	○	○ (Not usable as bit data)
CW	Up-down counter	Hexadecimal	CW(Address)(Bit position) Notation example: CW0F0 • Address (word unit) (hexadecimal): 00 to 0F • Bit position (hexadecimal): 0	○	○ (Not usable as bit data)
GW	Global link register	Hexadecimal	GW(Address)(Bit position) Notation example: GWFF0 • Address (word unit) (hexadecimal): 00 to FF • Bit position (hexadecimal): 0	○	○ (Not usable as bit data)
EW	Event register	Hexadecimal	EW(Address)(Bit position) Notation example: EWFFF0 • Address (word unit) (hexadecimal): 000 to FFF • Bit position (hexadecimal): 0	○	○ (Not usable as bit data)
NW	Nesting coil	Hexadecimal	NW(Address)(Bit position) Notation example: NW0F0 • Address (word unit) (hexadecimal): 00 to 0F • Bit position (hexadecimal): 0	○	○ (Not usable as bit data)
PW	Process register	Hexadecimal	PW(Address)(Bit position) Notation example: PW080 • Address (word unit) (hexadecimal): 00 to 08 • Bit position (hexadecimal): 0	○	○ (Not usable as bit data)
IW	I/O input register	Hexadecimal	000 to FFF	○	○ (Not usable as bit data)
OW	I/O output register	Hexadecimal	000 to FFF	○	○ (Not usable as bit data)
BW	Function data register	Hexadecimal	000 to 1FE	○	○ (Not usable as bit data)
LBW	Extension internal register	Hexadecimal	LBW(Address)(Bit position) Notation example: LBWFFF0 • Address (word unit) (hexadecimal): 000 to FFF • Bit position (hexadecimal): 0	○	○ (Not usable as bit data)
LRW	Converter-specific internal register	Hexadecimal	LRW(Address)(Bit position) Notation example: LRW0FF0 • Address (word unit) (hexadecimal): 000 to 0FF • Bit position (hexadecimal): 0	○	○ (Not usable as bit data)
LVW	Converter-specific edge contact register	Hexadecimal	LVW(Address)(Bit position) Notation example: LVW0FF0 • Address (word unit) (hexadecimal): 000 to 0FF • Bit position (hexadecimal): 0	○	○ (Not usable as bit data)

Device name		Device No. representation	Setting range	Specifications of EG devices*1	
				Assignment to EG devices	Access using a client
VW	Edge contact	Hexadecimal	VW(Address)(Bit position) Notation example: VWFF0 • Address (word unit) (hexadecimal): 00 to FF • Bit position (hexadecimal): 0	○	○ (Not usable as bit data)

*1 For the devices assigned to EG devices (gateway devices) and the compatible clients, refer to the following.
GT Designer3 (GOT2000) Screen Design Manual

*2 When it is used with bit specification of word device, the offset function cannot be used.

Availability of writing/reading data to/from word devices ([HITACHI S10VE])

The following shows whether writing/reading data to/from word devices is available by device type.

R/W: Both read and write

R/-: Read only

-/W: Write only

-/-: No read/write access

Device name	Device type			
	Word (16 bits)	Double-word (32 bits)	Quad-word (64 bits)	Bit of word data
TC	R/W	-/-	-/-	-/-
CC	R/W	-/-	-/-	-/-
UC	R/W	-/-	-/-	-/-
DW*1	R/W	R/W	-/-	R/W
AW	R/W	R/W	-/-	-/-
SW	R/-	R/-	-/-	-/-
JW	R/W	R/W	-/-	-/-
QW	R/W	R/W	-/-	-/-
TS	R/W	-/-	-/-	-/-
US	R/W	-/-	-/-	-/-
CS	R/W	-/-	-/-	-/-
FW*1	R/W	R/W	-/-	R/W
LWW*1	R/W	R/W	-/-	R/W
LXW*1	R/W	R/W	-/-	R/W
XW	R/W	R/W	-/-	-/-
YW	R/W	R/W	-/-	-/-
RW	R/W	R/W	-/-	-/-
MW	R/W	R/W	-/-	-/-
KW	R/W	R/W	-/-	-/-
TW	R/W	R/W	-/-	-/-
UW	R/W	R/W	-/-	-/-
CW	R/W	R/W	-/-	-/-
GW	R/W	R/W	-/-	-/-
EW	R/W	R/W	-/-	-/-
NW	R/W	R/W	-/-	-/-
PW	R/W	R/W	-/-	-/-
IW	R/W	R/W	-/-	-/-
OW	R/W	R/W	-/-	-/-
BW	R/W	R/W	-/-	-/-
LBW	R/W	R/W	-/-	-/-
LRW	R/W	R/W	-/-	-/-
LVW	R/W	R/W	-/-	-/-
VW	R/W	R/W	-/-	-/-

*1 When bit specification of word device is performed, the uppermost bit is b0 and the lowermost bit is b15.

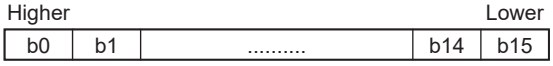

Monitoring-supported double-word devices ([HITACHI S10VE])

The following table shows monitoring-supported double-word devices.

To check whether writing/reading data to/from each device is available, refer to the following.

☞ Page 559 Availability of writing/reading data to/from double-word devices ([HITACHI S10VE])

For the formats of devices, refer to the following.

GT Designer3 (GOT2000) Screen Design Manual

○: Available

×: Not available

Device name		Device No. representation	Setting range	Specifications of EG devices*1	
				Assignment to EG devices	Access using a client
LLL	Long-word work register	Hexadecimal	0000 to 1FFF	×	×
LML	Backup long-word work register	Hexadecimal	0000 to 1FFF	×	×
LF	Floating-point work register	Hexadecimal	0000 to 1FFF	×	×
LG	Backup single-precision floating-point work register	Hexadecimal	0000 to 1FFF	×	×
DL	Function data register	Hexadecimal	000 to FFE	×	×
AL	Extension internal register	Hexadecimal	AL(Address)(Bit position) Notation example: ALFE0 • Address (word unit) (hexadecimal): 00 to FE • Bit position (hexadecimal): 0	×	×
SL	System register	Hexadecimal	SL(Address)(Bit position) Notation example: SLBFE0 • Address (word unit) (hexadecimal): 000 to BFE • Bit position (hexadecimal): 0	×	×
JL	Transfer register	Hexadecimal	JL(Address)(Bit position) Notation example: JLFE0 • Address (word unit) (hexadecimal): 00 to FE • Bit position (hexadecimal): 0	×	×
QL	Receive register	Hexadecimal	QL(Address)(Bit position) Notation example: QLFFE0 • Address (word unit) (hexadecimal): 000 to FFE • Bit position (hexadecimal): 0	×	×
FL	Function work register	Hexadecimal	000 to BFE	×	×
LWL	Extension function work register	Hexadecimal	0000 to FFFE	×	×
LXL	Backup work register	Hexadecimal	0000 to 3FFE	×	×
XL	External input	Hexadecimal	XL(Address)(Bit position) Notation example: XLFFE0 • Address (word unit) (hexadecimal): 000 to FFE • Bit position (hexadecimal): 0	×	×
YL	External output	Hexadecimal	YL(Address)(Bit position) Notation example: YLFFE0 • Address (word unit) (hexadecimal): 000 to FFE • Bit position (hexadecimal): 0	×	×
RL	Internal register	Hexadecimal	RL(Address)(Bit position) Notation example: RLFE0 • Address (word unit) (hexadecimal): 00 to FE • Bit position (hexadecimal): 0	×	×
ML	Extension internal register	Hexadecimal	ML(Address)(Bit position) Notation example: MLFFE0 • Address (word unit) (hexadecimal): 000 to FFE • Bit position (hexadecimal): 0	×	×
KL	Keep relay	Hexadecimal	KL(Address)(Bit position) Notation example: KLFE0 • Address (word unit) (hexadecimal): 00 to FE • Bit position (hexadecimal): 0	×	×

Device name		Device No. representation	Setting range	Specifications of EG devices*1	
				Assignment to EG devices	Access using a client
TL	On-delay timer	Hexadecimal	TL(Address)(Bit position) Notation example: TL7E0 • Address (word unit) (hexadecimal): 00 to 7E • Bit position (hexadecimal): 0	×	×
UL	One-shot timer	Hexadecimal	UL(Address)(Bit position) Notation example: UL0E0 • Address (word unit) (hexadecimal): 00 to 0E • Bit position (hexadecimal): 0	×	×
CL	Up-down counter	Hexadecimal	CL(Address)(Bit position) Notation example: CL0E0 • Address (word unit) (hexadecimal): 00 to 0E • Bit position (hexadecimal): 0	×	×
GWL*2	Global link register	Hexadecimal	GWL(Address)(Bit position) Notation example: GWLFE0 • Address (word unit) (hexadecimal): 00 to FE • Bit position (hexadecimal): 0	×	×
EL	Event register	Hexadecimal	EL(Address)(Bit position) Notation example: ELFFE0 • Address (word unit) (hexadecimal): 000 to FFE • Bit position (hexadecimal): 0	×	×
NL	Nesting coil	Hexadecimal	NL(Address)(Bit position) Notation example: NL0E0 • Address (word unit) (hexadecimal): 00 to 0E • Bit position (hexadecimal): 0	×	×
PL	Process register	Hexadecimal	PL(Address)(Bit position) Notation example: PL060 • Address (word unit) (hexadecimal): 00 to 06 • Bit position (hexadecimal): 0	×	×
IL	I/O input register	Hexadecimal	000 to FFE	×	×
OL	I/O output register	Hexadecimal	000 to FFEF	×	×
BL	Function data register	Hexadecimal	000 to 1FE	×	×
LBL	Extension internal register	Hexadecimal	LBL(Address)(Bit position) Notation example: LBLFFE0 • Address (word unit) (hexadecimal): 000 to FFE • Bit position (hexadecimal): 0	×	×
LRL	Converter-specific internal register	Hexadecimal	LRL(Address)(Bit position) Notation example: LRL0FE0 • Address (word unit) (hexadecimal): 000 to 0FE • Bit position (hexadecimal): 0	×	×
LVL	Converter-specific edge contact register	Hexadecimal	LVL(Address)(Bit position) Notation example: LVL0FE0 • Address (word unit) (hexadecimal): 000 to 0FE • Bit position (hexadecimal): 0	×	×
VL	Edge contact	Hexadecimal	VL(Address)(Bit position) Notation example: VLFE0 • Address (word unit) (hexadecimal): 00 to FE • Bit position (hexadecimal): 0	×	×
BD	Internal register	Hexadecimal	000 to 1FE	×	×

*1 For the devices assigned to EG devices (gateway devices) and the compatible clients, refer to the following.
GT Designer3 (GOT2000) Screen Design Manual

*2 The global link register (GWL) corresponds to the global link register (GL) of the PLU CPU.

Availability of writing/reading data to/from double-word devices ([HITACHI S10VE])

The following shows whether writing/reading data to/from double-word devices is available by device type.

R/W: Both read and write

R/-: Read only

-/W: Write only

-/-: No read/write access

Device name	Device type			
	Word (16 bits)	Double-word (32 bits)	Quad-word (64 bits)	Bit of double-word data
LLL	-/-	R/W	-/-	-/-
LML	-/-	R/W	-/-	-/-
LF	-/-	R/W	-/-	-/-
LG	-/-	R/W	-/-	-/-
DL	-/-	R/W	-/-	-/-
AL	-/-	R/W	-/-	-/-
SL	-/-	R/-	-/-	-/-
JL	-/-	R/W	-/-	-/-
QL	-/-	R/W	-/-	-/-
FL	-/-	R/W	-/-	-/-
LWL	-/-	R/W	-/-	-/-
LXL	-/-	R/W	-/-	-/-
XL	-/-	R/W	-/-	-/-
YL	-/-	R/W	-/-	-/-
RL	-/-	R/W	-/-	-/-
ML	-/-	R/W	-/-	-/-
KL	-/-	R/W	-/-	-/-
TL	-/-	R/W	-/-	-/-
UL	-/-	R/W	-/-	-/-
CL	-/-	R/W	-/-	-/-
GWL	-/-	R/W	-/-	-/-
EL	-/-	R/W	-/-	-/-
NL	-/-	R/W	-/-	-/-
PL	-/-	R/W	-/-	-/-
IL	-/-	R/W	-/-	-/-
OL	-/-	R/W	-/-	-/-
BL	-/-	R/W	-/-	-/-
LBL	-/-	R/W	-/-	-/-
LRL	-/-	R/W	-/-	-/-
LVL	-/-	R/W	-/-	-/-
VL	-/-	R/W	-/-	-/-
BD	-/-	R/W	-/-	-/-

HITACHI equipment ([HITACHI S10mini/S10V])

GT 27 GT 25 GT 23

Item	Reference
Device setting dialog	☞ Page 560 Device setting dialog ([HITACHI S10mini/S10V])
Specifications of bit devices	☞ Page 561 Monitoring-supported bit devices ([HITACHI S10mini/S10V])
	☞ Page 562 Availability of writing/reading data to/from bit devices ([HITACHI S10mini/S10V])
Specifications of word devices	☞ Page 563 Monitoring-supported word devices ([HITACHI S10mini/S10V])
	☞ Page 565 Availability of writing/reading data to/from word devices ([HITACHI S10mini/S10V])
Specifications of double-word devices	☞ Page 566 Monitoring-supported double-word devices ([HITACHI S10mini/S10V])
	☞ Page 566 Availability of writing/reading data to/from double-word devices ([HITACHI S10mini/S10V])

Device setting dialog ([HITACHI S10mini/S10V])

Set a device to be monitored.

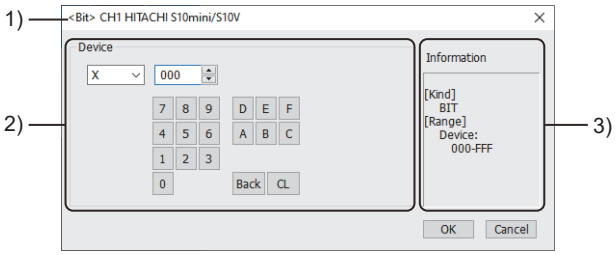

1) Title

Data type and channel number of the device to be set

2) [Device]

Set the device name and device number.

If a bit number needs to be specified, the setting item is displayed.

Example) Setting of X000

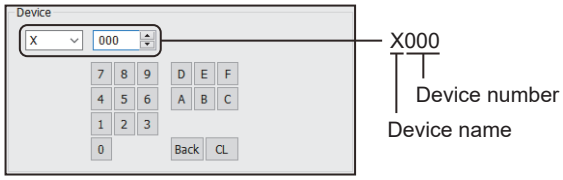

3) [Information]

Displays the setting range of each setting item according to the selected device.

Monitoring-supported bit devices ([HITACHI S10mini/S10V])

The following table shows monitoring-supported bit devices.

To check whether writing/reading data to/from each device is available, refer to the following.

☞ Page 562 Availability of writing/reading data to/from bit devices ([HITACHI S10mini/S10V])

For the formats of devices, refer to the following.

GT Designer3 (GOT2000) Screen Design Manual

○: Available

×: Not available

Device name		Device No. representation	Setting range	Specifications of EG devices*1	
				Assignment to EG devices	Access using a client
X	External input	Hexadecimal	X(Address)(Bit position) Notation example: XFF0 • Address (word unit) (hexadecimal): 00 to FF • Bit position (hexadecimal): 0 to F	○	○ (Not usable as word data)
Y	External output	Hexadecimal	Y(Address)(Bit position) Notation example: YFF0 • Address (word unit) (hexadecimal): 00 to FF • Bit position (hexadecimal): 0 to F	○	○ (Not usable as word data)
GL*2	Global link register	Hexadecimal	GL(Address)(Bit position) Notation example: GLFF0 • Address (word unit) (hexadecimal): 00 to FF • Bit position (hexadecimal): 0 to F	○	○ (Not usable as word data)
R	Internal register	Hexadecimal	R(Address)(Bit position) Notation example: RFF0 • Address (word unit) (hexadecimal): 00 to FF • Bit position (hexadecimal): 0 to F	○	○ (Not usable as word data)
K	Keep relay	Hexadecimal	K(Address)(Bit position) Notation example: KFF0 • Address (word unit) (hexadecimal): 00 to FF • Bit position (hexadecimal): 0 to F	○	○ (Not usable as word data)
E	Event register	Hexadecimal	E(Address)(Bit position) Notation example: EFF0 • Address (word unit) (hexadecimal): 00 to FF • Bit position (hexadecimal): 0 to F	○	○ (Not usable as word data)
T	On-delay timer	Hexadecimal	T(Address)(Bit position) Notation example: T1F0 • Address (word unit) (hexadecimal): 00 to 1F • Bit position (hexadecimal): 0 to F	○	○ (Not usable as word data)
C	Up-down counter	Hexadecimal	C(Address)(Bit position) Notation example: CF0 • Address (word unit) (hexadecimal): 0 to F • Bit position (hexadecimal): 0 to F	○	○ (Not usable as word data)
U	One-shot timer	Hexadecimal	U(Address)(Bit position) Notation example: U0F0 • Address (word unit) (hexadecimal): 00 to 0F • Bit position (hexadecimal): 0 to F	○	○ (Not usable as word data)
M	Extended internal register	Hexadecimal	M(Address)(Bit position) Notation example: MFF0 • Address (word unit) (hexadecimal): 00 to FF • Bit position (hexadecimal): 0 to F	○	○ (Not usable as word data)
A	Extended internal register	Hexadecimal	A(Address)(Bit position) Notation example: AFF0 • Address (word unit) (hexadecimal): 00 to FF • Bit position (hexadecimal): 0 to F	○	○ (Not usable as word data)
S	System register	Hexadecimal	S(Address)(Bit position) Notation example: SBF0 • Address (word unit) (hexadecimal): 00 to BF • Bit position (hexadecimal): 0 to F	○	○ (Not usable as word data)
J	Transfer register	Hexadecimal	J(Address)(Bit position) Notation example: JFF0 • Address (word unit) (hexadecimal): 00 to FF • Bit position (hexadecimal): 0 to F	○	○ (Not usable as word data)

Device name		Device No. representation	Setting range	Specifications of EG devices*1	
				Assignment to EG devices	Access using a client
Q	Receive register	Hexadecimal	Q(Address)(Bit position) Notation example: QFF0 • Address (word unit) (hexadecimal): 00 to FF • Bit position (hexadecimal): 0 to F	○	○ (Not usable as word data)

*1 For the devices assigned to EG devices (gateway devices) and the compatible clients, refer to the following.
GT Designer3 (GOT2000) Screen Design Manual

*2 The global link register (GL) corresponds to the global link register (G) of the PLU CPU.

Availability of writing/reading data to/from bit devices ([HITACHI S10mini/S10V])

The following shows whether writing/reading data to/from bit devices is available by device type.

When the device type is other than the bit type, set the device No. in multiples of 16.

R/W: Both read and write

R/-: Read only

-/W: Write only

-/-: No read/write access

Device name	Device type				
	Bit	Byte (8 bits)	Word (16 bits)	Double-word (32 bits)	Quad-word (64 bits)
X	R/W	-/-	-/-	-/-	-/-
Y	R/W	-/-	-/-	-/-	-/-
GL	R/W	-/-	-/-	-/-	-/-
R	R/W	-/-	-/-	-/-	-/-
K	R/W	-/-	-/-	-/-	-/-
E	R/W	-/-	-/-	-/-	-/-
T	R/W	-/-	-/-	-/-	-/-
C	R/W	-/-	-/-	-/-	-/-
U	R/W	-/-	-/-	-/-	-/-
M	R/W	-/-	-/-	-/-	-/-
A	R/W	-/-	-/-	-/-	-/-
S	R/-	-/-	-/-	-/-	-/-
J	R/W	-/-	-/-	-/-	-/-
Q	R/W	-/-	-/-	-/-	-/-

Monitoring-supported word devices ([HITACHI S10mini/S10V])

The following table shows monitoring-supported word devices.

To check whether writing/reading data to/from each device is available, refer to the following.

☞ Page 565 Availability of writing/reading data to/from word devices ([HITACHI S10mini/S10V])

For the formats of devices, refer to the following.

GT Designer3 (GOT2000) Screen Design Manual

○: Available

×: Not available

Device name		Device No. representation	Setting range	Specifications of EG devices*1	
				Assignment to EG devices	Access using a client
TC	On-delay timer (count value)	Hexadecimal	000 to 1FF	○	○ (Not usable as bit data)
CC	Up-down counter (count value)	Hexadecimal	00 to FF	○	○ (Not usable as bit data)
UC	One-shot timer (count value)	Hexadecimal	000 to 0FF	○	○ (Not usable as bit data)
DW*2	Function data register	Hexadecimal	000 to FFF	○	○
AW	Extension internal register	Hexadecimal	AW(Address)(Bit position) Notation example: AWFF0 • Address (word unit) (hexadecimal): 00 to FF • Bit position (hexadecimal): 0	○	○ (Not usable as bit data)
SW	System register	Hexadecimal	SW(Address)(Bit position) Notation example: SWBF0 • Address (word unit) (hexadecimal): 00 to BF • Bit position (hexadecimal): 0	○	○ (Not usable as bit data)
JW	Transfer register	Hexadecimal	JW(Address)(Bit position) Notation example: JWFF0 • Address (word unit) (hexadecimal): 00 to FF • Bit position (hexadecimal): 0	○	○ (Not usable as bit data)
QW	Receive register	Hexadecimal	QW(Address)(Bit position) Notation example: QWFF0 • Address (word unit) (hexadecimal): 00 to FF • Bit position (hexadecimal): 0	○	○ (Not usable as bit data)
TS	On-delay timer (set value)	Hexadecimal	000 to 1FF	○	○ (Not usable as bit data)
US	One-shot timer (set value)	Hexadecimal	000 to 0FF	○	○ (Not usable as bit data)
CS	Up-down counter (set value)	Hexadecimal	00 to FF	○	○ (Not usable as bit data)
FW*2	Function work register	Hexadecimal	000 to BFF	○	○
LWW*2	Extension function work register	Hexadecimal	0000 to FFFF	○	○
LXW*2	Backup work register	Hexadecimal	0000 to 3FFF	○	○
XW	External input	Hexadecimal	XW(Address)(Bit position) Notation example: XWFF0 • Address (word unit) (hexadecimal): 00 to FF • Bit position (hexadecimal): 0	○	○ (Not usable as bit data)
YW	External output	Hexadecimal	YW(Address)(Bit position) Notation example: YWFF0 • Address (word unit) (hexadecimal): 00 to FF • Bit position (hexadecimal): 0	○	○ (Not usable as bit data)

Device name		Device No. representation	Setting range	Specifications of EG devices*1	
				Assignment to EG devices	Access using a client
RW	Internal register	Hexadecimal	RW(Address)(Bit position) Notation example: RWFF0 • Address (word unit) (hexadecimal): 00 to FF • Bit position (hexadecimal): 0	○	○ (Not usable as bit data)
MW	Extension internal register	Hexadecimal	MW(Address)(Bit position) Notation example: MWFF0 • Address (word unit) (hexadecimal): 00 to FF • Bit position (hexadecimal): 0	○	○ (Not usable as bit data)
KW	Keep relay	Hexadecimal	KW(Address)(Bit position) Notation example: KWFF0 • Address (word unit) (hexadecimal): 00 to FF • Bit position (hexadecimal): 0	○	○ (Not usable as bit data)
TW	On-delay timer	Hexadecimal	TW(Address)(Bit position) Notation example: TW1F0 • Address (word unit) (hexadecimal): 00 to 1F • Bit position (hexadecimal): 0	○	○ (Not usable as bit data)
UW	One-shot timer	Hexadecimal	UW(Address)(Bit position) Notation example: UW0F0 • Address (word unit) (hexadecimal): 00 to 0F • Bit position (hexadecimal): 0	○	○ (Not usable as bit data)
CW	Up-down counter	Hexadecimal	CW(Address)(Bit position) Notation example: CWF0 • Address (word unit) (hexadecimal): 0 to F • Bit position (hexadecimal): 0	○	○ (Not usable as bit data)
GW	Global link register	Hexadecimal	GW(Address)(Bit position) Notation example: GWFF0 • Address (word unit) (hexadecimal): 00 to FF • Bit position (hexadecimal): 0	○	○ (Not usable as bit data)
EW	Event register	Hexadecimal	EW(Address)(Bit position) Notation example: EWFF0 • Address (word unit) (hexadecimal): 00 to FF • Bit position (hexadecimal): 0	○	○ (Not usable as bit data)

*1 For the devices assigned to EG devices (gateway devices) and the compatible clients, refer to the following.
GT Designer3 (GOT2000) Screen Design Manual

*2 When it is used with bit specification of word device, the offset function cannot be used.

Availability of writing/reading data to/from word devices ([HITACHI S10mini/S10V])

The following shows whether writing/reading data to/from word devices is available by device type.

R/W: Both read and write

R/-: Read only

-/W: Write only

-/-: No read/write access

Device name	Device type			
	Word (16 bits)	Double-word (32 bits)	Quad-word (64 bits)	Bit of word data
TC	R/W	-/-	-/-	-/-
CC	R/W	-/-	-/-	-/-
UC	R/W	-/-	-/-	-/-
DW*1	R/W	R/W	-/-	R/W
AW	R/W	R/W	-/-	-/-
SW	R/-	R/-	-/-	-/-
JW	R/W	R/W	-/-	-/-
QW	R/W	R/W	-/-	-/-
TS	R/W	-/-	-/-	-/-
US	R/W	-/-	-/-	-/-
CS	R/W	-/-	-/-	-/-
FW*1	R/W	R/W	-/-	R/W
LWW*1	R/W	R/W	-/-	R/W
LXW*1	R/W	R/W	-/-	R/W
XW	R/W	R/W	-/-	-/-
YW	R/W	R/W	-/-	-/-
RW	R/W	R/W	-/-	-/-
MW	R/W	R/W	-/-	-/-
KW	R/W	R/W	-/-	-/-
TW	R/W	R/W	-/-	-/-
UW	R/W	R/W	-/-	-/-
CW	R/W	R/W	-/-	-/-
GW	R/W	R/W	-/-	-/-
EW	R/W	R/W	-/-	-/-

*1 When bit specification of word device is performed, the uppermost bit is b0 and the lowermost bit is b15.

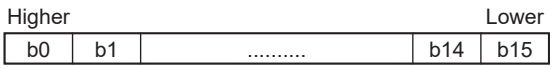

A

Monitoring-supported double-word devices ([HITACHI S10mini/S10V])

The following table shows monitoring-supported double-word devices.

To check whether writing/reading data to/from each device is available, refer to the following.

☞ Page 566 Availability of writing/reading data to/from double-word devices ([HITACHI S10mini/S10V])

For the formats of devices, refer to the following.

📖GT Designer3 (GOT2000) Screen Design Manual

○: Available

×: Not available

Device name		Device No. representation	Setting range	Specifications of EG devices*1	
				Assignment to EG devices	Access using a client
LLL	Long-word work register	Hexadecimal	0000 to 1FFF	×	×
LML	Backup long-word work register	Hexadecimal	0000 to 1FFF	×	×
LF	Floating-point work register	Hexadecimal	0000 to 1FFF	×	×
LG	Backup single-precision floating-point work register	Hexadecimal	0000 to 1FFF	×	×

*1 For the devices assigned to EG devices (gateway devices) and the compatible clients, refer to the following.
📖GT Designer3 (GOT2000) Screen Design Manual

Availability of writing/reading data to/from double-word devices ([HITACHI S10mini/S10V])

The following shows whether writing/reading data to/from double-word devices is available by device type.

R/W: Both read and write

R/-: Read only

-/W: Write only

-/-: No read/write access

Device name	Device type			
	Word (16 bits)	Double-word (32 bits)	Quad-word (64 bits)	Bit of double-word data
LLL	-/-	R/W	-/-	-/-
LML	-/-	R/W	-/-	-/-
LF	-/-	R/W	-/-	-/-
LG	-/-	R/W	-/-	-/-

FUJI equipment ([FUJI Temperature Controller/Digital Controller])

GT 27 GT 25 GT 23 GT 21 GS

Item	Reference
Device setting dialog	☞ Page 567 Device setting dialog ([FUJI Temperature Controller/Digital Controller])
Specifications of bit devices	☞ Page 568 Monitoring-supported bit devices ([FUJI Temperature Controller/Digital Controller])
	☞ Page 568 Availability of writing/reading data to/from bit devices ([FUJI Temperature Controller/Digital Controller])
Specifications of word devices	☞ Page 569 Monitoring-supported word devices ([FUJI Temperature Controller/Digital Controller])
	☞ Page 569 Availability of writing/reading data to/from word devices ([FUJI Temperature Controller/Digital Controller])

Device setting dialog ([FUJI Temperature Controller/Digital Controller])

Set a device to be monitored.

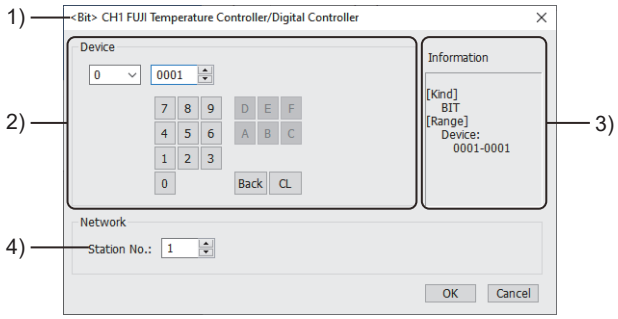

1) Title

Data type and channel number of the device to be set

2) [Device]

Set the device name and device number.

If a bit number needs to be specified, the setting item is displayed.

Example) Setting of 00001

3) [Information]

Displays the setting range of each setting item according to the selected device.

4) [Station No.]

Set the station number.

The setting range is [1] to [199] (direct), [200] to [215] (indirect), or [216] to [255] (direct).

For indirect specification of a station number, refer to the following.

☞ Page 568 Indirect specification of a station number ([FUJI Temperature Controller/Digital Controller])

A

■Indirect specification of a station number ([FUJI Temperature Controller/Digital Controller])

When you specify any of 200 to 215 for the station number, the value of the corresponding GOT data register (GD10 to GD25) is used as the station number.

The following shows the correspondence between station number setting values and GOT data registers (GD).

Station No.	GOT data register (GD)	Setting range
200	GD10	[1] to [119], [216] to [255] Setting a value outside the above range causes a device range error.
201	GD11	
:	:	
214	GD24	
215	GD25	

Monitoring-supported bit devices ([FUJI Temperature Controller/Digital Controller])

The following table shows monitoring-supported bit devices.

Devices are set with the coil and register numbers of the temperature controller.

For the coil numbers, register numbers, and their corresponding parameters' address maps, refer to the following.

📖Manual of the temperature controller used

To check whether writing/reading data to/from each device is available, refer to the following.

☞ Page 568 Availability of writing/reading data to/from bit devices ([FUJI Temperature Controller/Digital Controller])

For the formats of devices, refer to the following.

📖GT Designer3 (GOT2000) Screen Design Manual

○: Available

×: Not available

Device name		Device No. representation	Setting range	Specifications of EG devices*1	
				Assignment to EG devices	Access using a client
0	Bit data	Decimal	0001	×	○
1	Bit data	Decimal	0001 to 0016	×	○

*1 For the devices assigned to EG devices (gateway devices) and the compatible clients, refer to the following.
📖GT Designer3 (GOT2000) Screen Design Manual

Availability of writing/reading data to/from bit devices ([FUJI Temperature Controller/Digital Controller])

The following shows whether writing/reading data to/from bit devices is available by device type.

When the device type is other than the bit type, set the device No. in multiples of 16.

R/W: Both read and write

R/-: Read only

-/W: Write only

-/-: No read/write access

Device name	Device type				
	Bit	Byte (8 bits)	Word (16 bits)	Double-word (32 bits)	Quad-word (64 bits)
0	R/W	-/-	-/-	-/-	-/-
1	R/-	-/-	-/-	-/-	-/-

Monitoring-supported word devices ([FUJI Temperature Controller/Digital Controller])

The following table shows monitoring-supported word devices.

Devices are set with the coil and register numbers of the temperature controller.

For the coil numbers, register numbers, and their corresponding parameters' address maps, refer to the following.

📖Manual of the temperature controller used

To check whether writing/reading data to/from each device is available, refer to the following.

☞ Page 569 Availability of writing/reading data to/from word devices ([FUJI Temperature Controller/Digital Controller])

For the formats of devices, refer to the following.

📖GT Designer3 (GOT2000) Screen Design Manual

○: Available

×: Not available

Device name		Device No. representation	Setting range	Specifications of EG devices*1	
				Assignment to EG devices	Access using a client
3	Word data	Decimal	0001 to 4907	○	○
4	Word data	Decimal	0001 to 5032	○	○

*1 For the devices assigned to EG devices (gateway devices) and the compatible clients, refer to the following.
📖GT Designer3 (GOT2000) Screen Design Manual

Availability of writing/reading data to/from word devices ([FUJI Temperature Controller/Digital Controller])

The following shows whether writing/reading data to/from word devices is available by device type.

R/W: Both read and write

R/-: Read only

-/W: Write only

-/-: No read/write access

Device name	Device type			
	Word (16 bits)	Double-word (32 bits)	Quad-word (64 bits)	Bit of word data
3	R/-	R/-	-/-	R/-
4	R/W	R/W	-/-	R/W

FUJI equipment ([FUJI MICREX-F])

GT 27 GT 25 GT 23

Item	Reference
Device setting dialog	☞ Page 570 Device setting dialog ([FUJI MICREX-F])
Specifications of bit devices	☞ Page 571 Monitoring-supported bit devices ([FUJI MICREX-F])
	☞ Page 572 Availability of writing/reading data to/from bit devices ([FUJI MICREX-F])
Specifications of word devices	☞ Page 573 Monitoring-supported word devices ([FUJI MICREX-F])
	☞ Page 574 Availability of writing/reading data to/from word devices ([FUJI MICREX-F])
Specifications of double-word devices	☞ Page 575 Monitoring-supported double-word devices ([FUJI MICREX-F])
	☞ Page 575 Availability of writing/reading data to/from double-word devices ([FUJI MICREX-F])

Device setting dialog ([FUJI MICREX-F])

Set a device to be monitored.

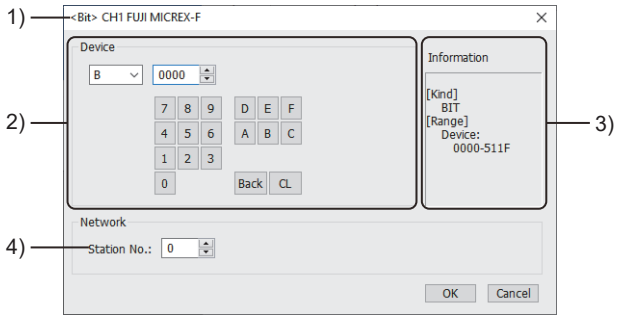

1) Title

Data type and channel number of the device to be set

2) [Device]

Set the device name and device number.

If a bit number needs to be specified, the setting item is displayed.

Example) Setting of B0000

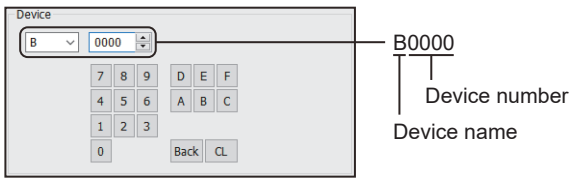

3) [Information]

Displays the setting range of each setting item according to the selected device.

4) [Station No.]

Specify a station number.

The setting range is [0] to [99].

Monitoring-supported bit devices ([FUJI MICREX-F])

The following table shows monitoring-supported bit devices.

To check whether writing/reading data to/from each device is available, refer to the following.

☞ Page 572 Availability of writing/reading data to/from bit devices ([FUJI MICREX-F])

For the formats of devices, refer to the following.

GT Designer3 (GOT2000) Screen Design Manual

○: Available

×: Not available

Device name		Device No. representation	Setting range	Specifications of EG devices*1	
				Assignment to EG devices	Access using a client
B	I/O relay	Decimal + hexadecimal	B(Word No.)(Bit No.) Notation example: B5110 • Word No. (decimal): 000 to 511 • Bit No. (hexadecimal): 0 to F	○	○ (Not usable as word data)
L	Link memory	Decimal + hexadecimal	L(Word No.)(Bit No.) Notation example: L5110 • Word No. (decimal): 000 to 511 • Bit No. (hexadecimal): 0 to F	○	○ (Not usable as word data)
M	Auxiliary relay	Decimal + hexadecimal	M(Word No.)(Bit No.) Notation example: M5110 • Word No. (decimal): 000 to 511 • Bit No. (hexadecimal): 0 to F	○	○ (Not usable as word data)
K	Keep relay	Decimal + hexadecimal	K(Word No.)(Bit No.) Notation example: K0630 • Word No. (decimal): 000 to 063 • Bit No. (hexadecimal): 0 to F	○	○ (Not usable as word data)
A	Annunciator relay	Decimal + hexadecimal	A(Word No.)(Bit No.) Notation example: A0450 • Word No. (decimal): 000 to 045 • Bit No. (hexadecimal): 0 to F	○	○ (Not usable as word data)
T	Timer output (0.01 s)	Decimal	000 to 511	○	○ (Not usable as word data)
	Timer output (0.1 s)	Decimal	512 to 999	○	○ (Not usable as word data)
C	Counter output	Decimal	000 to 511	○	○ (Not usable as word data)
F	Special relay	Decimal + hexadecimal	F(Word No.)(Bit No.) Notation example: F1250 • Word No. (decimal): 000 to 125 • Bit No. (hexadecimal): 0 to F	○	○ (Not usable as word data)
D	Differential relay	Decimal + hexadecimal	D(Word No.)(Bit No.) Notation example: D0630 • Word No. (decimal): 000 to 063 • Bit No. (hexadecimal): 0 to F	○	○ (Not usable as word data)

*1 For the devices assigned to EG devices (gateway devices) and the compatible clients, refer to the following.
GT Designer3 (GOT2000) Screen Design Manual

Availability of writing/reading data to/from bit devices ([FUJI MICREX-F])

The following shows whether writing/reading data to/from bit devices is available by device type.

When the device type is other than the bit type, set the device No. in multiples of 16.

R/W: Both read and write

R/-: Read only

-/W: Write only

-/-: No read/write access

Device name	Device type				
	Bit	Byte (8 bits)	Word (16 bits)	Double-word (32 bits)	Quad-word (64 bits)
B	R/W	-/-	-/-	-/-	-/-
L	R/W	-/-	-/-	-/-	-/-
M	R/W	-/-	-/-	-/-	-/-
K	R/W	-/-	-/-	-/-	-/-
A	R/W	-/-	-/-	-/-	-/-
T	R/W	-/-	-/-	-/-	-/-
C	R/W	-/-	-/-	-/-	-/-
F	R/-	-/-	-/-	-/-	-/-
D	R/W	-/-	-/-	-/-	-/-

Monitoring-supported word devices ([FUJI MICREX-F])

The following table shows monitoring-supported word devices.

To check whether writing/reading data to/from each device is available, refer to the following.

☞ Page 574 Availability of writing/reading data to/from word devices ([FUJI MICREX-F])

For the formats of devices, refer to the following.

GT Designer3 (GOT2000) Screen Design Manual

○: Available

×: Not available

Device name		Device No. representation	Setting range	Specifications of EG devices*1	
				Assignment to EG devices	Access using a client
WF	Special relay	Decimal	000 to 125	○	○ (Not usable as bit data)
WD	Differential relay	Decimal	000 to 063	○	○ (Not usable as bit data)
W24*2	Direct access	Decimal	W24:(Word No.) Notation example: W24:0255 • Word No. (decimal): 0000 to 0255	○	○
W*2*3	User file	Decimal	W(File No.):(Word No.) Notation example: W30:4095 • File No. (decimal): 30 to 109 • Word No. (decimal): 0000 to 4095	○	○
WB	I/O relay	Decimal	000 to 511	○	○ (Not usable as bit data)
WM	Auxiliary relay	Decimal	000 to 511	○	○ (Not usable as bit data)
WK	Keep relay	Decimal	000 to 063	○	○ (Not usable as bit data)
WA	Annunciator relay	Decimal	000 to 045	○	○ (Not usable as bit data)
WL	Link memory	Decimal	000 to 511	○	○ (Not usable as bit data)

*1 For the devices assigned to EG devices (gateway devices) and the compatible clients, refer to the following.
GT Designer3 (GOT2000) Screen Design Manual

*2 When it is used with bit specification of word device, the offset function cannot be used.

*3 When writing/reading data to/from a user file, set SI data for the data format of the PLC CPU, and 16 bits for the data length in GT Designer3.
With any setting other than the above, the PLC does not operate normally.

Availability of writing/reading data to/from word devices ([FUJI MICREX-F])

The following shows whether writing/reading data to/from word devices is available by device type.

R/W: Both read and write

R/-: Read only

-/W: Write only

-/-: No read/write access

Device name	Device type			
	Word (16 bits)	Double-word (32 bits)	Quad-word (64 bits)	Bit of word data
WF	R/-	R/-	-/-	-/-
WD	R/W	R/W	-/-	-/-
W24*1	R/W	R/W	-/-	R/W
W*1	R/W	-/-	-/-	R/W
WB	R/W	R/W	-/-	-/-
WM	R/W	R/W	-/-	-/-
WK	R/W	R/W	-/-	-/-
WA	R/W	R/W	-/-	-/-
WL	R/W	R/W	-/-	-/-

*1 When bit specification of word device is performed, the uppermost bit is b0 and the lowermost bit is b15.

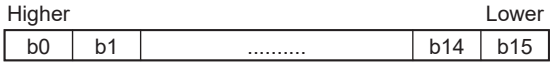

Monitoring-supported double-word devices ([FUJI MICREX-F])

The following table shows monitoring-supported double-word devices.

To check whether writing/reading data to/from each device is available, refer to the following.

☞ Page 575 Availability of writing/reading data to/from double-word devices ([FUJI MICREX-F])

For the formats of devices, refer to the following.

GT Designer3 (GOT2000) Screen Design Manual

○: Available

×: Not available

Device name		Device No. representation	Setting range	Specifications of EG devices*1	
				Assignment to EG devices	Access using a client
TR*2	Timer current value (0.01 s)	Decimal	000 to 511	×	×
CR*2	Counter current value	Decimal	000 to 511	×	×
BD	Data memory	Decimal	0000 to 4095	×	×
TS*2	Timer set value (0.01 s)	Decimal	000 to 511	×	×
W9*2	Timer current value (0.1 s)	Decimal	W9:(Word No.) Notation example: W9:0487 • Word No. (decimal): 0000 to 0487	×	×
CS*2	Counter set value	Decimal	000 to 511	×	×

*1 For the devices assigned to EG devices (gateway devices) and the compatible clients, refer to the following.
GT Designer3 (GOT2000) Screen Design Manual

*2 Decimal points are not displayed.

Availability of writing/reading data to/from double-word devices ([FUJI MICREX-F])

The following shows whether writing/reading data to/from double-word devices is available by device type.

R/W: Both read and write

R/-: Read only

-/W: Write only

-/-: No read/write access

Device name	Device type			
	Word (16 bits)	Double-word (32 bits)	Quad-word (64 bits)	Bit of double-word data
TR	-/-	R/W	-/-	-/-
CR	-/-	R/W	-/-	-/-
BD	-/-	R/W	-/-	-/-
TS	-/-	R/W	-/-	-/-
W9	-/-	R/W	-/-	-/-
CS	-/-	R/W	-/-	-/-

FUJI equipment ([FUJI MICREX-SX SPH])

GT 27 GT 25 GT 23 GT 21 GS

Item	Reference
Device setting dialog	☞ Page 576 Device setting dialog ([FUJI MICREX-SX SPH])
Specifications of word devices	☞ Page 577 Monitoring-supported word devices ([FUJI MICREX-SX SPH])
	☞ Page 577 Availability of writing/reading data to/from word devices ([FUJI MICREX-SX SPH])
Notation of devices	☞ Page 578 Notation of devices ([FUJI MICREX-SX SPH])

Device setting dialog ([FUJI MICREX-SX SPH])

Set a device to be monitored.

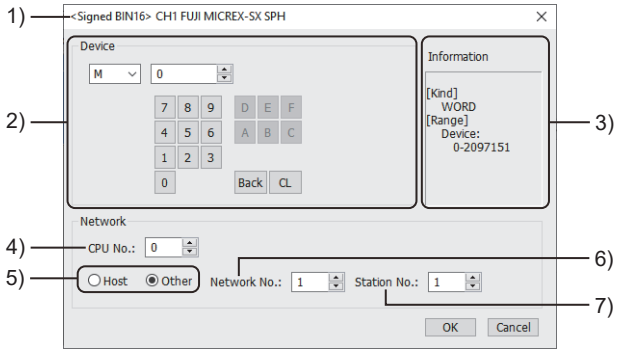

1) Title

Data type and channel number of the device to be set

2) [Device]

Set the device name and device number.

If a bit number needs to be specified, the setting item is displayed.

Example) Setting of M0

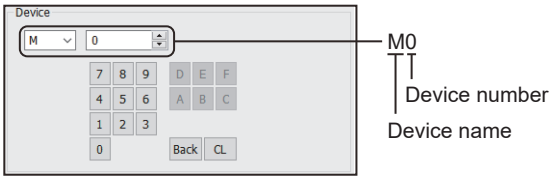

3) [Information]

Displays the setting range of each setting item according to the selected device.

4) [CPU No.]

Set the CPU number of the controller.

5) Station type specification

Select the station type (host or other) for the controller to be monitored.

- [Host]: The controller to be monitored is the host station.
- [Other]: The controller to be monitored is not the host station.

6) [Network No.]

This item appears when [Other] is selected for the station type.

Specify a network number.

7) [Station No.]

This item appears when [Other] is selected for the station type.

Specify a station number.

Monitoring-supported word devices ([FUJI MICREX-SX SPH])

The following table shows monitoring-supported word devices.

To check whether writing/reading data to/from each device is available, refer to the following.

☞ Page 577 Availability of writing/reading data to/from word devices ([FUJI MICREX-SX SPH])

For the formats of devices, refer to the following.

GT Designer3 (GOT2000) Screen Design Manual

○: Available

×: Not available

Device name		Device No. representation	Setting range	Specifications of EG devices*1	
				Assignment to EG devices	Access using a client
M	Non-retain memory	Decimal	0 to 2097151	○	○
L	Retain memory	Decimal	0 to 2097151	○	○
SM	System memory	Decimal	0 to 511	○	○

*1 For the devices assigned to EG devices (gateway devices) and the compatible clients, refer to the following.
GT Designer3 (GOT2000) Screen Design Manual

Availability of writing/reading data to/from word devices ([FUJI MICREX-SX SPH])

The following shows whether writing/reading data to/from word devices is available by device type.

R/W: Both read and write

R/-: Read only

-/W: Write only

-/-: No read/write access

Device name	Device type			
	Word (16 bits)	Double-word (32 bits)	Quad-word (64 bits)	Bit of word data*1
M	R/W	R/W	-/-	R/W
L	R/W	R/W	-/-	R/W
SM	R/W	R/W	-/-	R/W

*1 The GOT reads the value from a device and then write a value to the device.
Do not change the device value with a sequence program until the GOT completes writing a value to the device.

Notation of devices ([FUJI MICREX-SX SPH])

The notation of devices differs between the FUJI PLC programming software and GT Designer3.

The notation also differs according to the type of FUJI PLC programming software.

■Notation of devices in the single CPU system ([FUJI MICREX-SX SPH])

n: Device number

Device		Notation of devices in GT Designer3	Notation of devices in the PLC programming software	
			SX-Programmer Expert (D300win)	SX-Programmer Standard
Non-retain memory	Word device	Mn	%MW1.n	WMn
	Double-word device		%MD1.n	DMn
	Bit-specified word device	Mn.b0 to Mn.b15	%MX1.n.01 to %MX1.n.15	Mn0 to MnF*1
Retain memory	Word device	Ln	%MW3.n	WLn
	Double-word device		%MD3.n	DLn
	Bit-specified word device	Ln.b0 to Ln.b15	%MX3.n.01 to %MX3.n.15	Ln0 to LnF*1
System memory	Word device	SMn	%MW10.n	WSMn
	Double-word device		%MD10.n	DSMn
	Bit-specified word device	SMn.b0 to SMn.b15	%MX10.n.01 to %MX10.n.15	SMn0 to SMnF*1

*1 The device number is not displayed when it is 0.

■Notation of devices in the multiple CPU system ([FUJI MICREX-SX SPH])

n: Device number

p: CPU number

Device		Notation of devices in GT Designer3	Notation of devices in the PLC programming software	
			SX-Programmer Expert (D300win)	SX-Programmer Standard
Non-retain memory	Word device	0-FF/p Mn	%MWp.1.n	WMp.n
	Double-word device		%MDp.1.n	DMp.n
	Bit-specified word device	0-FF/p Mn.b0 to 0-FF/p Mn.b15	%MXp.1.n.01 to %MXp.1.n.15	Mp.n0 to Mp.nF*1
Retain memory	Word device	0-FF/p Ln	%MWp.3.n	WLp.n
	Double-word device		%MDp.3.n	DLp.n
	Bit-specified word device	0-FF/p Ln.b0 to 0-FF/p Ln.b15	%MXp.3.n.01 to %MXp.3.n.15	Lp.n0 to Lp.nF*1
System memory	Word device	0-FF/p SMn	%MWp.10.n	WSMp.n
	Double-word device		%MDp.10.n	DSMp.n
	Bit-specified word device	%MXp.10.n.01 to %MXp.10.n.15	%MX10.n.01 to %MX10.n.15	SMp.n0 to SMp.nF*1

*1 The device number is not displayed when it is 0.

YASKAWA equipment ([YASKAWA GL/PROGIC8])

GT 27 GT 25 GT 23

Item	Reference
Device setting dialog	☞ Page 579 Device setting dialog ([YASKAWA GL/PROGIC8])
Specifications of bit devices	☞ Page 580 Monitoring-supported bit devices ([YASKAWA GL/PROGIC8])
	☞ Page 580 Availability of writing/reading data to/from bit devices ([YASKAWA GL/PROGIC8])
Specifications of word devices	☞ Page 581 Monitoring-supported word devices ([YASKAWA GL/PROGIC8])
	☞ Page 581 Display values of link register and holding register ([YASKAWA GL/PROGIC8])
	☞ Page 582 Availability of writing/reading data to/from word devices ([YASKAWA GL/PROGIC8])

Device setting dialog ([YASKAWA GL/PROGIC8])

Set a device to be monitored.

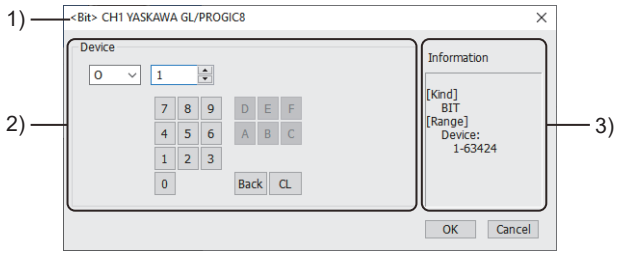

1) Title

Data type and channel number of the device to be set

2) [Device]

Set the device name and device number.

If a bit number needs to be specified, the setting item is displayed.

Example) Setting of O1

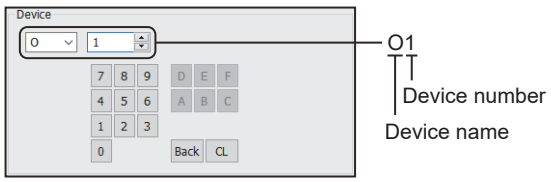

3) [Information]

Displays the setting range of each setting item according to the selected device.

Monitoring-supported bit devices ([YASKAWA GL/PROGIC8])

The following table shows monitoring-supported bit devices.

To check whether writing/reading data to/from each device is available, refer to the following.

☞ Page 580 Availability of writing/reading data to/from bit devices ([YASKAWA GL/PROGIC8])

For the formats of devices, refer to the following.

📖GT Designer3 (GOT2000) Screen Design Manual

○: Available

×: Not available

Device name		Device No. representation	Setting range	Specifications of EG devices*1	
				Assignment to EG devices	Access using a client
I*2	Input relay	Decimal	1 to 63424	○	○
O*3	Coil	Decimal	1 to 63424	○	○
D	Link coil	Decimal	D(Channel No.)(Device) Notation example: D12048 • Channel No. (decimal): 0 to 2 • Device (decimal): 1 to 2048 When [Channel No.] is [0], (Channel No.) is unnecessary.	○	○

*1 For the devices assigned to EG devices (gateway devices) and the compatible clients, refer to the following.
📖GT Designer3 (GOT2000) Screen Design Manual

*2 Change the input relay 10001 to 14096 to I1 to I4096 for setting. (When set in default)

*3 Set the internal coil N1 to N1536 as O513 to O2048.
However, setting must not exceed O1 to O512 and O513 to O2048.

Availability of writing/reading data to/from bit devices ([YASKAWA GL/PROGIC8])

The following shows whether writing/reading data to/from bit devices is available by device type.

When the device type is other than the bit type, set the device No. in multiples of 16.

R/W: Both read and write

R/-: Read only

-/W: Write only

-/-: No read/write access

Device name	Device type				
	Bit	Byte (8 bits)	Word (16 bits)	Double-word (32 bits)	Quad-word (64 bits)
I	R/-	-/-	R/-	R/-	-/-
O	R/W	-/-	R/W	R/W	-/-
D	R/W	-/-	R/W	R/W	-/-

Monitoring-supported word devices ([YASKAWA GL/PROGIC8])

The following table shows monitoring-supported word devices.

To check whether writing/reading data to/from each device is available, refer to the following.

☞ Page 582 Availability of writing/reading data to/from word devices ([YASKAWA GL/PROGIC8])

For the formats of devices, refer to the following.

📖GT Designer3 (GOT2000) Screen Design Manual

○: Available

×: Not available

Device name		Device No. representation	Setting range	Specifications of EG devices*1	
				Assignment to EG devices	Access using a client
Z*3	Input register	Decimal	1 to 31840	○	○
R*2	Link register	Decimal	R(Channel No.)(Device) Notation example: R12048 • Channel No. (decimal): 0 to 2 • Device (decimal): 1 to 2048 When [Channel No.] is [0], (Channel No.) is unnecessary.	○	○
W*2*4	Holding register	Decimal	1 to 28291	○	○
K*5	Constant register	Decimal	1 to 4096	○	○
SW*2	Holding register	Decimal	1 to 28291	○	○
SR*2	Link register	Decimal	SR(Channel No.)(Device) Notation example: SR12048 • Channel No. (decimal): 0 to 2 • Device (decimal): 1 to 2048 When [Channel No.] is [0], (Channel No.) is unnecessary.	○	○

*1 For the devices assigned to EG devices (gateway devices) and the compatible clients, refer to the following.
📖GT Designer3 (GOT2000) Screen Design Manual

*2 For the relationship between SR/SW and R/W, refer to the following.
☞ Page 581 Display values of link register and holding register ([YASKAWA GL/PROGIC8])

*3 Change the input register 30001 to 30512 to Z1 to Z512 for setting. (When set in default)

*4 Change the holding register 40001 to 49999 to W1 to W9999 for setting. (When set in default)

*5 Change the constant register 31001 to 35096 to K1 to K4096 for setting. (When set in default)

Display values of link register and holding register ([YASKAWA GL/PROGIC8])

SR and SW are virtual registers compatible with the data format used to display internal data of PLCs using R or W.

The following shows the difference between the display values of SR/SW and those of R/W corresponding to the values of PLC internal data.

PLC internal data (16 bits)	SR, SW	R, W
9999	9999	9999
1001	1001	1001
1000	1000	1000
999	999	999
0	0	0
-1	-1	32769
-999	-999	33767
-1000	-1000	33768
-1001	-1001	33769
-9999	-9999	42767

Availability of writing/reading data to/from word devices ([YASKAWA GL/PROGIC8])

The following shows whether writing/reading data to/from word devices is available by device type.

R/W: Both read and write

R/-: Read only

-/W: Write only

-/-: No read/write access

Device name	Device type			
	Word (16 bits)	Double-word (32 bits)	Quad-word (64 bits)	Bit of word data
Z	R/-	R/-	-/-	R/-
R	R/W	R/W	-/-	R/W
W	R/W	R/W	-/-	R/W
K	R/W	R/W	-/-	R/W
SW	R/W	R/W	-/-	R/W
SR	R/W	R/W	-/-	R/W

YASKAWA equipment ([YASKAWA CP9200(H)])

GT 27 GT 25 GT 23

Item	Reference
Device setting dialog	☞ Page 583 Device setting dialog ([YASKAWA CP9200(H)])
Specifications of bit devices	☞ Page 584 Monitoring-supported bit devices ([YASKAWA CP9200(H)])
	☞ Page 584 Availability of writing/reading data to/from bit devices ([YASKAWA CP9200(H)])
Specifications of word devices	☞ Page 585 Monitoring-supported word devices ([YASKAWA CP9200(H)])
	☞ Page 585 Availability of writing/reading data to/from word devices ([YASKAWA CP9200(H)])

Device setting dialog ([YASKAWA CP9200(H)])

Set a device to be monitored.

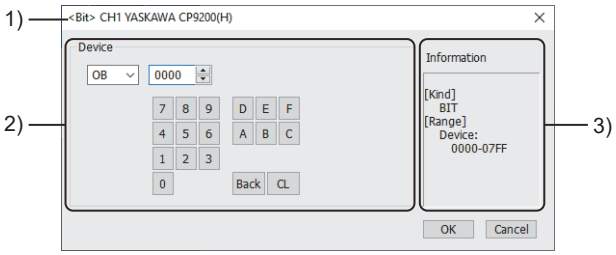

1) Title

Data type and channel number of the device to be set

2) [Device]

Set the device name and device number.

If a bit number needs to be specified, the setting item is displayed.

Example) Setting of OB0000

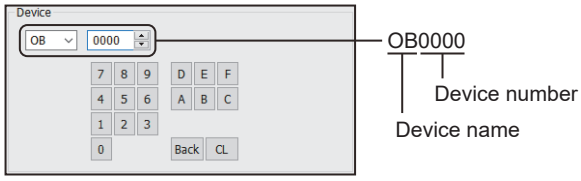

3) [Information]

Displays the setting range of each setting item according to the selected device.

A

Monitoring-supported bit devices ([YASKAWA CP9200(H)])

The following table shows monitoring-supported bit devices.

To check whether writing/reading data to/from each device is available, refer to the following.

☞ Page 584 Availability of writing/reading data to/from bit devices ([YASKAWA CP9200(H)])

For the formats of devices, refer to the following.

GT Designer3 (GOT2000) Screen Design Manual

○: Available

×: Not available

Device name		Device No. representation	Setting range	Specifications of EG devices*1	
				Assignment to EG devices	Access using a client
IB*2	Input relay	Hexadecimal	0000 to 07FF	○	○
OB*2	Coil	Hexadecimal	0000 to 07FF	○	○

*1 For the devices assigned to EG devices (gateway devices) and the compatible clients, refer to the following.
GT Designer3 (GOT2000) Screen Design Manual

*2 During operation of CP-9200H, specify the reference No. and quantities so that they do not cover both IB*** and OB***.

Availability of writing/reading data to/from bit devices ([YASKAWA CP9200(H)])

The following shows whether writing/reading data to/from bit devices is available by device type.

When the device type is other than the bit type, set the device No. in multiples of 16.

R/W: Both read and write

R/-: Read only

-/W: Write only

-/-: No read/write access

Device name	Device type				
	Bit	Byte (8 bits)	Word (16 bits)	Double-word (32 bits)	Quad-word (64 bits)
IB	R/W	-/-	R/W	R/W	-/-
OB	R/W	-/-	R/W	R/W	-/-

Monitoring-supported word devices ([YASKAWA CP9200(H)])

The following table shows monitoring-supported word devices.

To check whether writing/reading data to/from each device is available, refer to the following.

☞ Page 585 Availability of writing/reading data to/from word devices ([YASKAWA CP9200(H)])

For the formats of devices, refer to the following.

GT Designer3 (GOT2000) Screen Design Manual

○: Available

×: Not available

Device name		Device No. representation	Setting range	Specifications of EG devices*1	
				Assignment to EG devices	Access using a client
DW	Data register	Decimal	0 to 2047	○	○
MW*2	Common register	Decimal	0 to 7694	○	○
IW	Input register	Hexadecimal	0000 to 007F	○	○
OW	Output register	Hexadecimal	0000 to 007F	○	○
ZD	Data register	Decimal	0 to 2047	○	○

*1 For the devices assigned to EG devices (gateway devices) and the compatible clients, refer to the following.
GT Designer3 (GOT2000) Screen Design Manual

*2 To use data registers of CPU #1 during operation of CP-9200, copy them to MW0 to MW7694.

Availability of writing/reading data to/from word devices ([YASKAWA CP9200(H)])

The following shows whether writing/reading data to/from word devices is available by device type.

R/W: Both read and write

R/-: Read only

-/W: Write only

-/-: No read/write access

Device name	Device type			
	Word (16 bits)	Double-word (32 bits)	Quad-word (64 bits)	Bit of word data
DW	R/W	R/W	-/-	R/W
MW	R/W	R/W	-/-	R/W
IW	R/W	R/W	-/-	R/W
OW	R/W	R/W	-/-	R/W
ZD	R/W	R/W	-/-	R/W

YASKAWA equipment ([YASKAWA CP9300MS(MC compatible)])

GT 27 GT 25 GT 23

Item	Reference
Device setting dialog	☞ Page 586 Device setting dialog ([YASKAWA CP9300MS(MC compatible)])
Specifications of bit devices	☞ Page 587 Monitoring-supported bit devices ([YASKAWA CP9300MS(MC compatible)])
	☞ Page 587 Availability of writing/reading data to/from bit devices ([YASKAWA CP9300MS(MC compatible)])
Specifications of word devices	☞ Page 588 Monitoring-supported word devices ([YASKAWA CP9300MS(MC compatible)])
	☞ Page 588 Availability of writing/reading data to/from word devices ([YASKAWA CP9300MS(MC compatible)])

Device setting dialog ([YASKAWA CP9300MS(MC compatible)])

Set a device to be monitored.

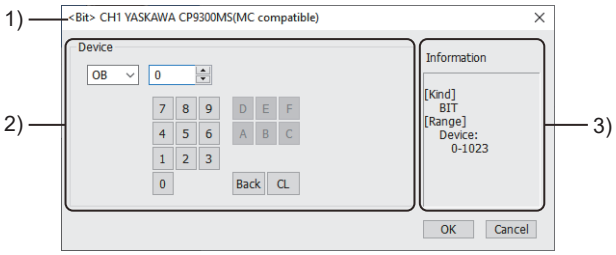

1) Title

Data type and channel number of the device to be set

2) [Device]

Set the device name and device number.

If a bit number needs to be specified, the setting item is displayed.

Example) Setting of OB0

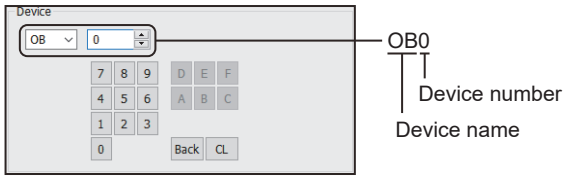

3) [Information]

Displays the setting range of each setting item according to the selected device.

Monitoring-supported bit devices ([YASKAWA CP9300MS(MC compatible)])

The following table shows monitoring-supported bit devices.

To check whether writing/reading data to/from each device is available, refer to the following.

☞ Page 587 Availability of writing/reading data to/from bit devices ([YASKAWA CP9300MS(MC compatible)])

For the formats of devices, refer to the following.

GT Designer3 (GOT2000) Screen Design Manual

○: Available

×: Not available

Device name		Device No. representation	Setting range	Specifications of EG devices*1	
				Assignment to EG devices	Access using a client
IB	Input relay	Decimal	0 to 1023	○	○
OB	Coil	Decimal	0 to 1023	○	○

*1 For the devices assigned to EG devices (gateway devices) and the compatible clients, refer to the following.
GT Designer3 (GOT2000) Screen Design Manual

Availability of writing/reading data to/from bit devices ([YASKAWA CP9300MS(MC compatible)])

The following shows whether writing/reading data to/from bit devices is available by device type.

When the device type is other than the bit type, set the device No. in multiples of 16.

R/W: Both read and write

R/-: Read only

-/W: Write only

-/-: No read/write access

Device name	Device type				
	Bit	Byte (8 bits)	Word (16 bits)	Double-word (32 bits)	Quad-word (64 bits)
IB	R/-	-/-	R/-	R/-	-/-
OB	R/W	-/-	R/W	R/W	-/-

A

Monitoring-supported word devices ([YASKAWA CP9300MS(MC compatible)])

The following table shows monitoring-supported word devices.

To check whether writing/reading data to/from each device is available, refer to the following.

☞ Page 588 Availability of writing/reading data to/from word devices ([YASKAWA CP9300MS(MC compatible)])

For the formats of devices, refer to the following.

📖GT Designer3 (GOT2000) Screen Design Manual

○: Available

×: Not available

Device name		Device No. representation	Setting range	Specifications of EG devices*1	
				Assignment to EG devices	Access using a client
M	Data register	Decimal	0 to 2047	○	○
I	Input register	Decimal	0 to 63	○	○
o	Output register	Decimal	0 to 63	○	○

*1 For the devices assigned to EG devices (gateway devices) and the compatible clients, refer to the following.
📖GT Designer3 (GOT2000) Screen Design Manual

Availability of writing/reading data to/from word devices ([YASKAWA CP9300MS(MC compatible)])

The following shows whether writing/reading data to/from word devices is available by device type.

R/W: Both read and write

R/-: Read only

-/W: Write only

-/-: No read/write access

Device name	Device type			
	Word (16 bits)	Double-word (32 bits)	Quad-word (64 bits)	Bit of word data
M	R/W	R/W	-/-	R/W
I	R/W	R/W	-/-	R/W
o	R/W	R/W	-/-	R/W

YASKAWA equipment ([YASKAWA MP2000/MP900/CP9200SH])

GT27 GT25 GT23 GT21 GS

Item	Reference
Device setting dialog	☞ Page 589 Device setting dialog ([YASKAWA MP2000/MP900/CP9200SH])
Specifications of bit devices	☞ Page 590 Monitoring-supported bit devices ([YASKAWA MP2000/MP900/CP9200SH])
	☞ Page 590 Availability of writing/reading data to/from bit devices ([YASKAWA MP2000/MP900/CP9200SH])
Specifications of word devices	☞ Page 591 Monitoring-supported word devices ([YASKAWA MP2000/MP900/CP9200SH])
	☞ Page 591 Availability of writing/reading data to/from word devices ([YASKAWA MP2000/MP900/CP9200SH])

Device setting dialog ([YASKAWA MP2000/MP900/CP9200SH])

Set a device to be monitored.

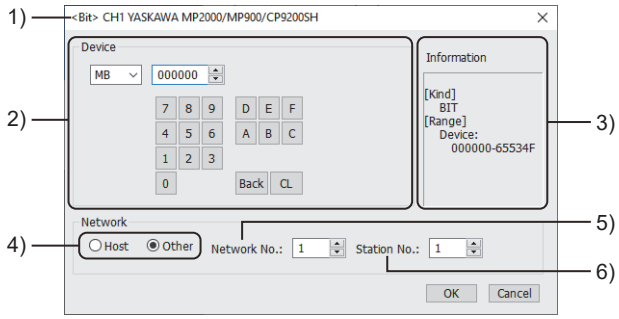

1) Title

Data type and channel number of the device to be set

2) [Device]

Set the device name and device number.

If a bit number needs to be specified, the setting item is displayed.

Example) Setting of MB000000

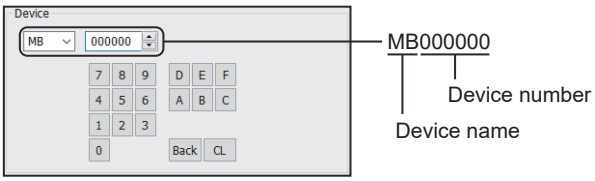

3) [Information]

Displays the setting range of each setting item according to the selected device.

4) Station type specification

Select the station type (host or other) for the controller to be monitored.

- [Host]: The controller to be monitored is the host station.
- [Other]: The controller to be monitored is not the host station.

5) [Network No.]

This item appears when [Other] is selected for the station type.

Specify a network number.

6) [Station No.]

This item appears when [Other] is selected for the station type.

Specify a station number.

Monitoring-supported bit devices ([YASKAWA MP2000/MP900/CP9200SH])

The following table shows monitoring-supported bit devices.

To check whether writing/reading data to/from each device is available, refer to the following.

☞ Page 590 Availability of writing/reading data to/from bit devices ([YASKAWA MP2000/MP900/CP9200SH])

For the formats of devices, refer to the following.

GT Designer3 (GOT2000) Screen Design Manual

○: Available

×: Not available

Device name		Device No. representation	Setting range	Specifications of EG devices*1	
				Assignment to EG devices	Access using a client
IB	Input relay	Hexadecimal	00000 to 7FFFF	○	○
MB	Coil	Decimal + hexadecimal	MB(Word address)(Bit No.) Notation example: MB655340 The rightmost digit is a bit address. • Channel No. (decimal): 00000 to 65534 • Bit No. (hexadecimal): 0 to F	○	○

*1 For the devices assigned to EG devices (gateway devices) and the compatible clients, refer to the following.
GT Designer3 (GOT2000) Screen Design Manual

Availability of writing/reading data to/from bit devices ([YASKAWA MP2000/MP900/CP9200SH])

The following shows whether writing/reading data to/from bit devices is available by device type.

When the device type is other than the bit type, set the device No. in multiples of 16.

R/W: Both read and write

R/-: Read only

-/W: Write only

-/-: No read/write access

Device name	Device type				
	Bit	Byte (8 bits)	Word (16 bits)	Double-word (32 bits)	Quad-word (64 bits)
IB	R/-	-/-	R/-	R/-	-/-
MB	R/W	-/-	R/W	R/W	-/-

Monitoring-supported word devices ([YASKAWA MP2000/MP900/CP9200SH])

The following table shows monitoring-supported word devices.

To check whether writing/reading data to/from each device is available, refer to the following.

☞ Page 591 Availability of writing/reading data to/from word devices ([YASKAWA MP2000/MP900/CP9200SH])

For the formats of devices, refer to the following.

GT Designer3 (GOT2000) Screen Design Manual

○: Available

×: Not available

Device name		Device No. representation	Setting range	Specifications of EG devices*1	
				Assignment to EG devices	Access using a client
IW	Input register	Hexadecimal	0000 to 7FFF	○	○
MW	Holding register	Decimal	0 to 65534	○	○

*1 For the devices assigned to EG devices (gateway devices) and the compatible clients, refer to the following.
GT Designer3 (GOT2000) Screen Design Manual

Availability of writing/reading data to/from word devices ([YASKAWA MP2000/MP900/CP9200SH])

The following shows whether writing/reading data to/from word devices is available by device type.

R/W: Both read and write

R/-: Read only

-/W: Write only

-/-: No read/write access

Device name	Device type			
	Word (16 bits)	Double-word (32 bits)	Quad-word (64 bits)	Bit of word data
IW	R/-	R/-	-/-	R/-
MW*1	R/W	R/W	-/-	R/W

*1 For the CP-317, only reading is possible for bit specification of word devices.

YASKAWA equipment ([YASKAWA MP3000])

GT27 GT25 GT23 GT21 GS

Item	Reference
Device setting dialog	☞ Page 592 Device setting dialog ([YASKAWA MP3000])
Specifications of bit devices	☞ Page 593 Monitoring-supported bit devices ([YASKAWA MP3000])
	☞ Page 593 Availability of writing/reading data to/from bit devices ([YASKAWA MP3000])
Specifications of word devices	☞ Page 594 Monitoring-supported word devices ([YASKAWA MP3000])
	☞ Page 594 Availability of writing/reading data to/from word devices ([YASKAWA MP3000])

Device setting dialog ([YASKAWA MP3000])

Set a device to be monitored.

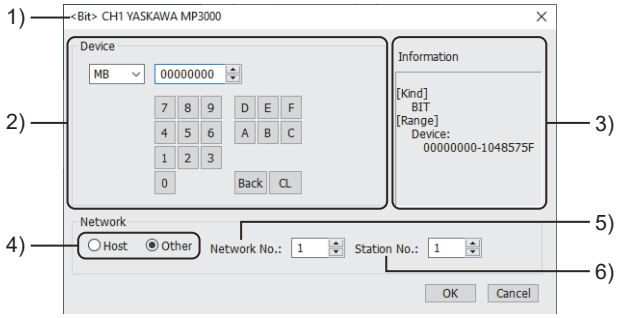

1) Title

Data type and channel number of the device to be set

2) [Device]

Set the device name and device number.

If a bit number needs to be specified, the setting item is displayed.

Example) Setting of MB00000000

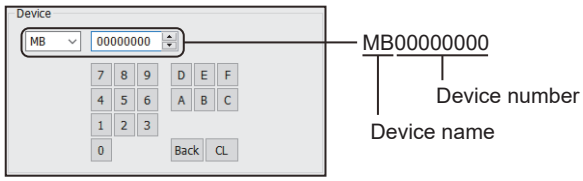

3) [Information]

Displays the setting range of each setting item according to the selected device.

4) Station type specification

Select the station type (host or other) for the controller to be monitored.

- [Host]: The controller to be monitored is the host station.
- [Other]: The controller to be monitored is not the host station.

5) [Network No.]

This item appears when [Other] is selected for the station type.

Specify a network number.

6) [Station No.]

This item appears when [Other] is selected for the station type.

Specify a station number.

Monitoring-supported bit devices ([YASKAWA MP3000])

The following table shows monitoring-supported bit devices.

To check whether writing/reading data to/from each device is available, refer to the following.

☞ Page 593 Availability of writing/reading data to/from bit devices ([YASKAWA MP3000])

For the formats of devices, refer to the following.

GT Designer3 (GOT2000) Screen Design Manual

○: Available

×: Not available

Device name		Device No. representation	Setting range	Specifications of EG devices*1	
				Assignment to EG devices	Access using a client
IB	Input register	Hexadecimal	000000 to 21FFFF	○	○
OB	Output register	Hexadecimal	000000 to 21FFFF	○	○
MB	Data register	Decimal + hexadecimal	MB(Word address)(Bit No.) Notation example: MB10485750 The rightmost digit is a bit address. • Channel No. (decimal): 0000000 to 1048575 • Bit No. (hexadecimal): 0 to F	○	○
YGB*2	G register	Decimal + hexadecimal	YGB(Word address)(Bit No.) Notation example: YGB20971510 The rightmost digit is a bit address. • Channel No. (decimal): 0000000 to 2097151 • Bit No. (hexadecimal): 0 to F	○	○
SB	System register	Decimal + hexadecimal	SB(Word address)(Bit No.) Notation example: SB655340 The rightmost digit is a bit address. • Channel No. (decimal): 00000 to 65534 • Bit No. (hexadecimal): 0 to F	○	○ (Not usable as word data)

*1 For the devices assigned to EG devices (gateway devices) and the compatible clients, refer to the following.
GT Designer3 (GOT2000) Screen Design Manual

*2 This device is displayed as GB in the peripherals of the YASKAWA PLC.

Availability of writing/reading data to/from bit devices ([YASKAWA MP3000])

The following shows whether writing/reading data to/from bit devices is available by device type.

When the device type is other than the bit type, set the device No. in multiples of 16.

R/W: Both read and write

R/-: Read only

-/W: Write only

-/-: No read/write access

Device name	Device type				
	Bit	Byte (8 bits)	Word (16 bits)	Double-word (32 bits)	Quad-word (64 bits)
IB	R/-	-/-	R/-	R/-	-/-
OB	R/W	-/-	R/W	R/W	-/-
MB	R/W	-/-	R/W	R/W	-/-
YGB	R/W	-/-	R/W	R/W	-/-
SB	R/W	-/-	R/W	R/W	-/-

Monitoring-supported word devices ([YASKAWA MP3000])

The following table shows monitoring-supported word devices.

To check whether writing/reading data to/from each device is available, refer to the following.

☞ Page 594 Availability of writing/reading data to/from word devices ([YASKAWA MP3000])

For the formats of devices, refer to the following.

GT Designer3 (GOT2000) Screen Design Manual

○: Available

×: Not available

Device name		Device No. representation	Setting range	Specifications of EG devices*1	
				Assignment to EG devices	Access using a client
IW	Input register	Hexadecimal	00000 to 21FFF	○	○
OW	Output register	Hexadecimal	00000 to 21FFF	○	○
MW	Data register	Decimal	0 to 1048575	○	○
YGW*2	G register	Decimal	0 to 2097151	○	○
SW	System register	Decimal	0 to 65534	○	○

*1 For the devices assigned to EG devices (gateway devices) and the compatible clients, refer to the following.
GT Designer3 (GOT2000) Screen Design Manual

*2 This device is displayed as GW in the peripherals of the YASKAWA PLC.

Availability of writing/reading data to/from word devices ([YASKAWA MP3000])

The following shows whether writing/reading data to/from word devices is available by device type.

R/W: Both read and write

R/-: Read only

-/W: Write only

-/-: No read/write access

Device name	Device type			
	Word (16 bits)	Double-word (32 bits)	Quad-word (64 bits)	Bit of word data
IW	R/-	R/-	-/-	R/-
OW	R/W	R/W	-/-	R/W
MW	R/W	R/W	-/-	R/W
YGW	R/W	R/W	-/-	R/W
SW	R/W	R/W	-/-	R/W

YASKAWA equipment ([YASKAWA Robot Controller])

GT 27 GT 25 GT 23

Item	Reference
Device setting dialog	☞ Page 595 Device setting dialog ([YASKAWA Robot Controller])
Specifications of bit devices	☞ Page 596 Monitoring-supported bit devices ([YASKAWA Robot Controller])
	☞ Page 596 IO Data device details ([YASKAWA Robot Controller])
	☞ Page 597 Availability of writing/reading data to/from byte devices ([YASKAWA Robot Controller])
Specifications of byte devices	☞ Page 599 Monitoring-supported double-word devices ([YASKAWA Robot Controller])
	☞ Page 597 Availability of writing/reading data to/from bit devices ([YASKAWA Robot Controller])
Specifications of word devices	☞ Page 597 Monitoring-supported byte devices ([YASKAWA Robot Controller])
	☞ Page 598 Robot Control device details ([YASKAWA Robot Controller])
	☞ Page 597 Availability of writing/reading data to/from bit devices ([YASKAWA Robot Controller])
Specifications of double-word devices	☞ Page 597 Monitoring-supported byte devices ([YASKAWA Robot Controller])
	☞ Page 597 Availability of writing/reading data to/from bit devices ([YASKAWA Robot Controller])
Precautions	☞ Page 600 Precautions ([YASKAWA Robot Controller])

Device setting dialog ([YASKAWA Robot Controller])

Set a device to be monitored.

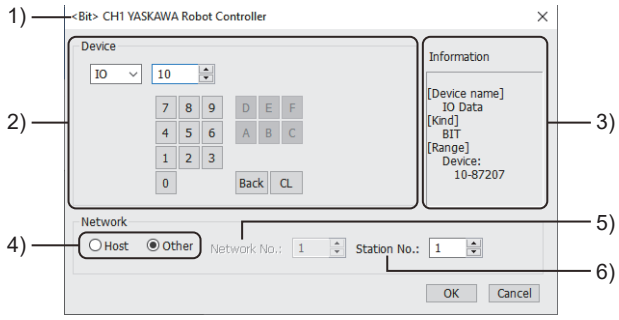

1)Title

Data type and channel number of the device to be set

2)[Device]

Set the device name and device number.

If a bit number needs to be specified, the setting item is displayed.

Example) Setting of IO10

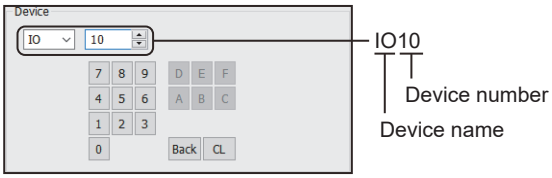

3)[Information]

Displays the setting range of each setting item according to the selected device.

4)Station type specification

Select the station type (host or other) for the controller to be monitored.

- [Host]: The controller to be monitored is the host station.
- [Other]: The controller to be monitored is not the host station.

5)[Network No.]

This item appears when [Other] is selected for the station type.

Specify a network number.

The setting range is [1] (fixed).

6)[Station No.]

This item appears when [Other] is selected for the station type.

Specify a station number.

The setting range is [1] to [120].

Monitoring-supported bit devices ([YASKAWA Robot Controller])

The following table shows monitoring-supported bit devices.

To check whether writing/reading data to/from each device is available, refer to the following.

☞ Page 597 Availability of writing/reading data to/from byte devices ([YASKAWA Robot Controller])

○: Available

×: Not available

Device name		Device No. representation	Setting range	Specifications of EG devices*1	
				Assignment to EG devices	Access using a client
IO	IO Data	Decimal + octal	IO(Byte address)(Bit address) Notation example: IO87200 The rightmost digit is a bit address. • Byte address (decimal): 1 to 8720 • Bit address (octal): 0 to 7 For the relationship between the data and device range of the robot controller, refer to the following. ☞ Page 596 IO Data device details ([YASKAWA Robot Controller])	○	○

*1 For the devices assigned to EG devices (gateway devices) and the compatible clients, refer to the following.
GT Designer3 (GOT2000) Screen Design Manual

IO Data device details ([YASKAWA Robot Controller])

The following shows the relationship between the data and device range of the robot controller.

The rightmost digit of each device number is a bit address.

Device range	Virtual device name
10 to 5127	Robot general-purpose input
10010 to 15127	Robot general-purpose output
20010 to 25127	External input
27010 to 29567	Network input
30010 to 35127	External output
37010 to 39567	Network output
40010 to 42567	Robot-dedicated input
50010 to 55127	Robot-dedicated output
60010 to 60647	Interface panel input
70010 to 79997	Auxiliary relay
80010 to 85127	Robot control status
87010 to 87207	Pseudo input

Availability of writing/reading data to/from bit devices ([YASKAWA Robot Controller])

The following shows whether writing/reading data to/from bit devices is available by device type.

When the device type is other than the bit type, set the device No. in multiples of 16.

R/W: Both read and write

R/-: Read only

-/W: Write only

-/-: No read/write access

Device name	Device type				
	Bit	Byte (8 bits)	Word (16 bits)	Double-word (32 bits)	Quad-word (64 bits)
IO*1	R/W	-/-	R/W	-/-	-/-

*1 Availability of reading/writing depends on the device number.
☞ Page 596 IO Data device details ([YASKAWA Robot Controller])

Monitoring-supported byte devices ([YASKAWA Robot Controller])

The following table shows monitoring-supported byte devices.

To check whether writing/reading data to/from each device is available, refer to the following.

☞ Page 597 Availability of writing/reading data to/from bit devices ([YASKAWA Robot Controller])

○: Available

×: Not available

Device name		Device No. representation	Setting range	Specifications of EG devices*1	
				Assignment to EG devices	Access using a client
B	Byte Variable	Decimal	0 to 1999	×	×

*1 For the devices assigned to EG devices (gateway devices) and the compatible clients, refer to the following.
GT Designer3 (GOT2000) Screen Design Manual

Availability of writing/reading data to/from byte devices ([YASKAWA Robot Controller])

The following shows whether writing/reading data to/from byte devices is available by device type.

R/W: Both read and write

R/-: Read only

-/W: Write only

-/-: No read/write access

Device name	Device type				
	Bit	Byte (8 bits)	Word (16 bits)	Double-word (32 bits)	Quad-word (64 bits)
B	-/-	R/W	-/-	-/-	-/-

Monitoring-supported word devices ([YASKAWA Robot Controller])

The following table shows monitoring-supported word devices.

To check whether writing/reading data to/from each device is available, refer to the following.

☞ Page 597 Availability of writing/reading data to/from byte devices ([YASKAWA Robot Controller])

○: Available

×: Not available

Device name		Device No. representation	Setting range	Specifications of EG devices*1	
				Assignment to EG devices	Access using a client
I	Integer Variable	Decimal	0 to 1999	○	○
M	Resister Data	Decimal	0 to 999	○	○
RC*2	Robot Control	Hexadecimal + decimal + decimal	RC(Command No.)-(Instance)((Attribute)) Notation example: RC70-8720(13) • Command No. (hexadecimal): 70 to 8C, 300 to 30C • Instance (decimal): 0 to 8720 • Attribute (decimal): 0 to 13 For the relationship between data that can be acquired using Robot Control and the virtual GOT devices, refer to the following. ☞ Page 598 Robot Control device details ([YASKAWA Robot Controller])	×	×

*1 For the devices assigned to EG devices (gateway devices) and the compatible clients, refer to the following.
GT Designer3 (GOT2000) Screen Design Manual

*2 Not available for a text display or text input object.

Robot Control device details ([YASKAWA Robot Controller])

Data that can be acquired using the Robot Control is assigned to the GOT virtual device (RC device).

Specify the Command No., Instance, and Attribute for the RC device to enable monitoring of the corresponding data.

Note the following when using the RC device.

Precautions	Description
Basic use of the RC device	Read all the elements to a GOT internal device in a batch using the script function or device data transfer function to monitor the data stored in the device. Setting the RC device to an object or others to monitor each element individually will decrease the monitoring speed.
Setting of the device data type and number of devices	Check the size of each data corresponding to the Command No., Instance, and Attribute to be specified. Set the data type and number of devices in the device settings so that the corresponding data can be stored.
Objects for which the RC device cannot be used	Do not specify the RC device directly in the following object settings for which consecutive devices are used. • Text display: Monitor device • Text input: Monitor device • Parts movement: [Device] (When [Position] is selected for [Move Way]) • Simple alarm display: Monitor device (When [Continuous] is selected for [Device No.]) • Recipe display (record list): [Control target record name], [Narrow down record names], or [Cursor row record name] • Trend graph: Monitor device (When [Continuous] is selected for [Device Setting]) • Document display: [Keyword Device] • Text print: Monitor device As described in the column for Basic use of the RC device, read all the elements to a GOT internal device in a batch to monitor the data stored in the device.

For details on each command, refer to the following.

Manual of the YASKAWA robot controller

The GOT supports the following commands.

Command No. (hexadecimal)	Command name
72	Status information read command
73	Execution job information read command
74	Axis configuration information read command
75	Robot position data read command
76	Position deviation read command
77	Torque data read command
7F	Robot position variable (P) read/write command
82	Alarm reset/error cancel command
88	Control time acquisition command
307	Robot position variable (P) multi-read/-write command
30A	Alarm data read command (subcode character string supported)
30B	Alarm history read command (subcode character string supported)

Availability of writing/reading data to/from word devices ([YASKAWA Robot Controller])

The following shows whether writing/reading data to/from word devices is available by device type.

R/W: Both read and write

R/-: Read only

-/W: Write only

-/-: No read/write access

Device name	Device type			
	Word (16 bits)	Double-word (32 bits)	Quad-word (64 bits)	Bit of word data
I	R/W	-/-	-/-	-/-
M	R/W	-/-	-/-	-/-
RC	R/W	R/W	-/-	R/-

Monitoring-supported double-word devices ([YASKAWA Robot Controller])

The following table shows monitoring-supported double-word devices.

To check whether writing/reading data to/from each device is available, refer to the following.

☞ Page 597 Availability of writing/reading data to/from byte devices ([YASKAWA Robot Controller])

○: Available

×: Not available

Device name		Device No. representation	Setting range	Specifications of EG devices*1	
				Assignment to EG devices	Access using a client
D	Double Int Variable	Decimal	0 to 1999	○	○

*1 For the devices assigned to EG devices (gateway devices) and the compatible clients, refer to the following.
GT Designer3 (GOT2000) Screen Design Manual

Availability of writing/reading data to/from double-word devices ([YASKAWA Robot Controller])

The following shows whether writing/reading data to/from double-word devices is available by device type.

R/W: Both read and write

R/-: Read only

-/W: Write only

-/-: No read/write access

Device name	Device type			
	Word (16 bits)	Double-word (32 bits)	Quad-word (64 bits)	Bit of double-word data
D	-/-	R/W	-/-	-/-

Precautions ([YASKAWA Robot Controller])

■Precautions when writing devices in a batch ([YASKAWA Robot Controller])

When many devices are written in a batch using the recipe function or device data transfer function, system alarm 402 (communication timeout error) may occur.

Take either of the following corrective actions.

- Specifying a longer communication timeout period
- Reducing the number of devices written in a batch

YOKOGAWA equipment ([YOKOGAWA STARDOM/FA500/FA-M3])

GT 27 GT 25 GT 23

Item	Reference
Device setting dialog	☞ Page 601 Device setting dialog ([YOKOGAWA STARDOM/FA500/FA-M3])
Specifications of bit devices	☞ Page 602 Monitoring-supported bit devices ([YOKOGAWA STARDOM/FA500/FA-M3])
	☞ Page 603 Availability of writing/reading data to/from bit devices ([YOKOGAWA STARDOM/FA500/FA-M3])
Specifications of word devices	☞ Page 604 Monitoring-supported word devices ([YOKOGAWA STARDOM/FA500/FA-M3])
	☞ Page 605 Availability of writing/reading data to/from word devices ([YOKOGAWA STARDOM/FA500/FA-M3])

Device setting dialog ([YOKOGAWA STARDOM/FA500/FA-M3])

Set a device to be monitored.

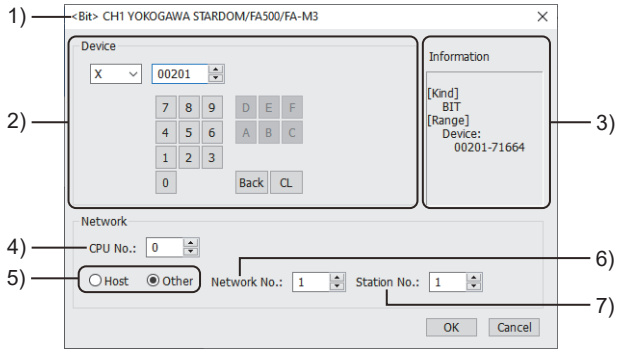

1) Title

Data type and channel number of the device to be set

2) [Device]

Set the device name and device number.

If a bit number needs to be specified, the setting item is displayed.

Example) Setting of X00201

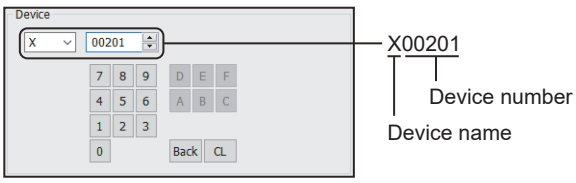

3) [Information]

Displays the setting range of each setting item according to the selected device.

4) [CPU No.]

Set the CPU number of the controller.

When monitoring a single CPU system, set the CPU No. to [0].

When monitoring a multiple CPU system, set the CPU No. to any of [0] to [4].

When [0] is set, the GOT monitors CPU No. 1.

5) Station type specification

Select the station type (host or other) for the controller to be monitored.

- [Host]: The controller to be monitored is the host station.
- [Other]: The controller to be monitored is not the host station.

A

6) [Network No.]

This item appears when [Other] is selected for the station type.

Specify a network number.

7) [Station No.]

This item appears when [Other] is selected for the station type.

Specify a station number.

Monitoring-supported bit devices ([YOKOGAWA STARDOM/FA500/FA-M3])

The following table shows monitoring-supported bit devices.

To check whether writing/reading data to/from each device is available, refer to the following.

☞ Page 603 Availability of writing/reading data to/from bit devices ([YOKOGAWA STARDOM/FA500/FA-M3])

For the formats of devices, refer to the following.

📖GT Designer3 (GOT2000) Screen Design Manual

If a device outside the setting range is set for an object, the value display at the object is indefinite.

However, no error is displayed for system alarm.

A device to be set for an object must be in the device range of YOKOGAWA PLC.

For the device range of YOKOGAWA PLC, refer to the manual below.

📖Manual of YOKOGAWA PLC

○: Available

×: Not available

Device name		Device No. representation	Setting range	Specifications of EG devices*1	
				Assignment to EG devices	Access using a client
X	Input relay	Decimal + decimal	X(Slot No.)(Terminal No.) Notation example: X71601 • Slot No. (decimal): 002 to 716 • Terminal No. (decimal): 01 to 64	○	○
Y	Output relay	Decimal + decimal	Y(Slot No.)(Terminal No.) Notation example: Y71601 • Slot No. (decimal): 002 to 716 • Terminal No. (decimal): 01 to 64	○	○
I	Internal relay	Decimal	1 to 65535	○	○
TU	Timer	Decimal	1 to 3072	○	○ (Not usable as word data)
CU	Counter	Decimal	1 to 3072	○	○ (Not usable as word data)
M	Special relay	Decimal	1 to 9984	○	○
L	Link relay	Decimal + decimal	L(FA link module No. - 1)(Link relay No.) Notation example: L70001 • FA link module No. - 1 (decimal): 0 to 7 (Set the link module No. minus 1.) • Link relay No. (decimal): 0001 to 8192	○	○
E	Shared relay	Decimal	1 to 4096	○	○

*1 For the devices assigned to EG devices (gateway devices) and the compatible clients, refer to the following.
📖GT Designer3 (GOT2000) Screen Design Manual

Availability of writing/reading data to/from bit devices ([YOKOGAWA STARDOM/FA500/FA-M3])

The following shows whether writing/reading data to/from bit devices is available by device type.

When the device type is other than the bit type, set the device No. in multiples of 16.

R/W: Both read and write

R/-: Read only

-/W: Write only

-/-: No read/write access

Device name	Device type				
	Bit	Byte (8 bits)	Word (16 bits)	Double-word (32 bits)	Quad-word (64 bits)
X	R/-	-/-	R/-	R/-	-/-
Y	R/W	-/-	R/W	R/W	-/-
I	R/W	-/-	R/W	R/W	-/-
TU	R/W	-/-	-/-	-/-	-/-
CU	R/W	-/-	-/-	-/-	-/-
M	R/W	-/-	R/W	R/W	-/-
L	R/W	-/-	R/W	R/W	-/-
E	R/W	-/-	R/W	R/W	-/-

Monitoring-supported word devices ([YOKOGAWA STARDOM/FA500/FA-M3])

The following table shows monitoring-supported word devices.

To check whether writing/reading data to/from each device is available, refer to the following.

☞ Page 605 Availability of writing/reading data to/from word devices ([YOKOGAWA STARDOM/FA500/FA-M3])

For the formats of devices, refer to the following.

GT Designer3 (GOT2000) Screen Design Manual

○: Available

×: Not available

Device name		Device No. representation	Setting range	Specifications of EG devices*1	
				Assignment to EG devices	Access using a client
TP	Timer	Decimal	1 to 3072	○	○ (Not usable as bit data)
CP	Counter	Decimal	1 to 3072	○	○ (Not usable as bit data)
D	Data register	Decimal	1 to 65535	○	○
Z	Special register	Decimal	1 to 1024	○	×
B	File register	Decimal	1 to 262144	○	○
V	Index register	Decimal	1 to 256	○	○
TS	Timer	Decimal	1 to 3072	○	○ (Not usable as bit data)
CS	Counter	Decimal	1 to 3072	○	○ (Not usable as bit data)
R	Shared register	Decimal	1 to 4096	○	○
W	Link register	Decimal + decimal	W(FA link module No. - 1)(Link register No.) Notation example: W70001 • FA link module No. - 1 (decimal): 0 to 7 (Set the link module No. minus 1.) • Link register No. (decimal): 0001 to 8192	○	×
F	Cache register	Decimal	000001 to 524288	○	○

*1 For the devices assigned to EG devices (gateway devices) and the compatible clients, refer to the following.
GT Designer3 (GOT2000) Screen Design Manual

Availability of writing/reading data to/from word devices ([YOKOGAWA STARDOM/FA500/FA-M3])

The following shows whether writing/reading data to/from word devices is available by device type.

R/W: Both read and write

R/-: Read only

-/W: Write only

-/-: No read/write access

Device name	Device type			
	Word (16 bits)	Double-word (32 bits)	Quad-word (64 bits)	Bit of word data
TP	R/W	R/W	-/-	-/-
CP	R/W	R/W	-/-	-/-
D	R/W	R/W	-/-	R/W
Z	R/W	R/W	-/-	R/W
B	R/W	R/W	-/-	R/W
V	R/W	R/W	-/-	R/W
TS	R/-	R/-	-/-	-/-
CS	R/-	R/-	-/-	-/-
R	R/W	R/W	-/-	R/W
W	R/W	R/W	-/-	R/W
F	R/W	R/W	-/-	R/W

A

YOKOGAWA equipment ([YOKOGAWA GREEN/UT100/UT2000/UTAdvanced])

GT 27 GT 25 GT 23

Item	Reference
Device setting dialog	☞ Page 606 Device setting dialog ([YOKOGAWA GREEN/UT100/UT2000/UTAdvanced])
Specifications of bit devices	☞ Page 607 Monitoring-supported bit devices ([YOKOGAWA GREEN/UT100/UT2000/UTAdvanced])
	☞ Page 607 Availability of writing/reading data to/from bit devices ([YOKOGAWA GREEN/UT100/UT2000/UTAdvanced])
Specifications of word devices	☞ Page 608 Monitoring-supported word devices ([YOKOGAWA GREEN/UT100/UT2000/UTAdvanced])
	☞ Page 608 Availability of writing/reading data to/from word devices ([YOKOGAWA GREEN/UT100/UT2000/UTAdvanced])

Device setting dialog ([YOKOGAWA GREEN/UT100/UT2000/UTAdvanced])

Set a device to be monitored.

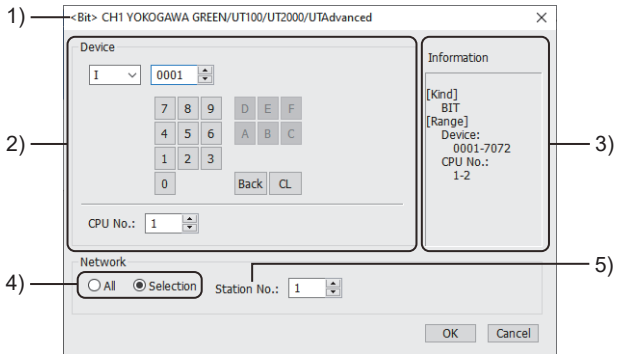

1) Title

Data type and channel number of the device to be set

2) [Device]

Set the device name and device number.

If a bit number needs to be specified, the setting item is displayed.

Example) Setting of I0001

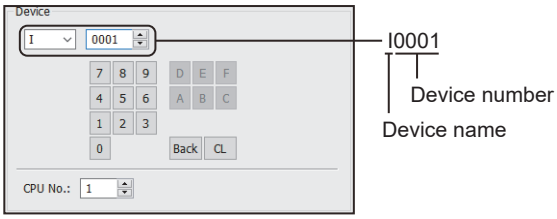

3) [Information]

Displays the setting range of each setting item according to the selected device.

4) Monitor target specification

Set the monitor target of the set device.

Item	Description
[All]	Select this item when writing data to all the connected temperature controllers. During monitoring, the temperature controller set for [Host Address] of the [Controller Setting] window is monitored. When data is input from a numerical input object, the data is written to all the connected temperature controllers. When no data is input, the temperature controller set for [Host Address] is monitored. When bit specification of word device is performed, data is written to the temperature controller set for [Host Address].
[Selection]	Select this item when monitoring the temperature controller that has the specified station number.

5) [Station No.]

This item appears when [Selection] is selected for the monitor target specification.

The setting range is [0] to [99] (direct) or [100] to [115] (indirect).

For indirect specification of a station number, refer to the following.

☞ Page 607 Indirect specification of a station number ([YOKOGAWA GREEN/UT100/UT2000/UTAdvanced])

■Indirect specification of a station number ([YOKOGAWA GREEN/UT100/UT2000/UTAdvanced])

When you specify any of 100 to 115 for the station number, the value of the corresponding GOT data register (GD10 to GD25) is used as the station number.

The following shows the correspondence between station number setting values and GOT data registers (GD).

Station No.	GOT data register (GD)	Setting range
100	GD10	[0] to [99] Setting a value outside the above range causes a device range error.
101	GD11	
:	:	
114	GD24	
115	GD25	

Monitoring-supported bit devices ([YOKOGAWA GREEN/UT100/UT2000/UTAdvanced])

The following table shows monitoring-supported bit devices.

To check whether writing/reading data to/from each device is available, refer to the following.

☞ Page 607 Availability of writing/reading data to/from bit devices ([YOKOGAWA GREEN/UT100/UT2000/UTAdvanced])

For the formats of devices, refer to the following.

GT Designer3 (GOT2000) Screen Design Manual

○: Available

×: Not available

Device name		Device No. representation	Setting range	Specifications of EG devices*1	
				Assignment to EG devices	Access using a client
I	Internal relay	Decimal	C(CPU No.)-I(Device) Notation example: C2-I0001 • CPU No. (decimal): 1 to 2 • Device (decimal): 0001 to 7072 When there is no setting for the CPU No. in the communication settings on the temperature controller side, set the CPU No. on the GOT side to 1 (default).	○	○

*1 For the devices assigned to EG devices (gateway devices) and the compatible clients, refer to the following.
GT Designer3 (GOT2000) Screen Design Manual

Availability of writing/reading data to/from bit devices ([YOKOGAWA GREEN/UT100/UT2000/UTAdvanced])

The following shows whether writing/reading data to/from bit devices is available by device type.

When the device type is other than the bit type, set the device No. in multiples of 16.

R/W: Both read and write

R/-: Read only

-/W: Write only

-/-: No read/write access

Device name	Device type				
	Bit	Byte (8 bits)	Word (16 bits)	Double-word (32 bits)	Quad-word (64 bits)
I	R/W	-/-	R/W	-/-	-/-

Monitoring-supported word devices ([YOKOGAWA GREEN/UT100/UT2000/UTAdvanced])

The following table shows monitoring-supported word devices.

To check whether writing/reading data to/from each device is available, refer to the following.

☞ Page 608 Availability of writing/reading data to/from word devices ([YOKOGAWA GREEN/UT100/UT2000/UTAdvanced])

For the formats of devices, refer to the following.

GT Designer3 (GOT2000) Screen Design Manual

○: Available

×: Not available

Device name		Device No. representation	Setting range	Specifications of EG devices*1	
				Assignment to EG devices	Access using a client
D	Data register	Decimal	C(CPU No.)-D(Device) Notation example: C2-D0001 • CPU No. (decimal): 1 to 2 • Device (decimal): 0001 to 9000 When there is no setting for the CPU No. in the communication settings on the temperature controller side, set the CPU No. on the GOT side to 1 (default).	○	○
B	File register	Decimal	0001 to 1600	○	○

*1 For the devices assigned to EG devices (gateway devices) and the compatible clients, refer to the following.
GT Designer3 (GOT2000) Screen Design Manual

Availability of writing/reading data to/from word devices ([YOKOGAWA GREEN/UT100/UT2000/UTAdvanced])

The following shows whether writing/reading data to/from word devices is available by device type.

R/W: Both read and write

R/-: Read only

-/W: Write only

-/-: No read/write access

Device name	Device type			
	Word (16 bits)	Double-word (32 bits)	Quad-word (64 bits)	Bit of word data
D	R/W	-/-	-/-	R/W
B	R/W	-/-	-/-	R/W

RKC equipment ([RKC SR Mini HG])

GT 27 GT 25 GT 23

Item	Reference
Device setting dialog	☞ Page 609 Device setting dialog ([RKC SR Mini HG])
Specifications of word devices	☞ Page 610 Monitoring-supported word devices ([RKC SR Mini HG])
	☞ Page 610 Availability of writing/reading data to/from word devices ([RKC SR Mini HG])

Device setting dialog ([RKC SR Mini HG])

Set a device to be monitored.

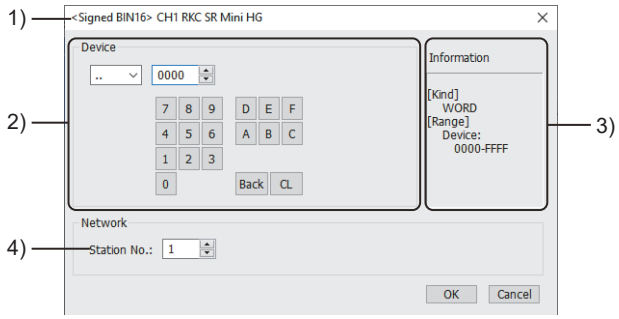

1) Title

Data type and channel number of the device to be set

2) [Device]

Set the device name and device number.

If a bit number needs to be specified, the setting item is displayed.

Example) Setting of ..0000

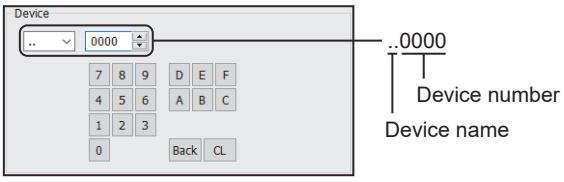

3) [Information]

Displays the setting range of each setting item according to the selected device.

4) [Station No.]

Set the station number.

Set it by a value of unit address +1 in decimal.

Example 1) When the unit address is 0: Set 1.

Example 2) When the unit address is F: Set 16.

The setting range is [0] to [99] (direct) or [100] to [115] (indirect).

For indirect specification of a station number, refer to the following.

☞ Page 610 Indirect specification of a station number ([RKC SR Mini HG])

■Indirect specification of a station number ([RKC SR Mini HG])

When you specify any of 100 to 115 for the station number, the value of the corresponding GOT data register (GD10 to GD25) is used as the station number.

The following shows the correspondence between station number setting values and GOT data registers (GD).

Station No.	GOT data register (GD)	Setting range
100	GD10	[0] to [99] Setting a value outside the above range causes a device range error.
101	GD11	
:	:	
114	GD24	
115	GD25	

Monitoring-supported word devices ([RKC SR Mini HG])

The following table shows monitoring-supported word devices.

To check whether writing/reading data to/from each device is available, refer to the following.

☞ Page 610 Availability of writing/reading data to/from word devices ([RKC SR Mini HG])

For the formats of devices, refer to the following.

📖GT Designer3 (GOT2000) Screen Design Manual

○: Available

×: Not available

Device name		Device No. representation	Setting range	Specifications of EG devices*1	
				Assignment to EG devices	Access using a client
..	Data	Hexadecimal	0000 to FFFF	○	○

*1 For the devices assigned to EG devices (gateway devices) and the compatible clients, refer to the following.
📖GT Designer3 (GOT2000) Screen Design Manual

Availability of writing/reading data to/from word devices ([RKC SR Mini HG])

The following shows whether writing/reading data to/from word devices is available by device type.

R/W: Both read and write

R/-: Read only

-/W: Write only

-/-: No read/write access

Device name	Device type			
	Word (16 bits)	Double-word (32 bits)	Quad-word (64 bits)	Bit of word data
..	R/W	R/W	-/-	R/W

ALLEN-BRADLEY equipment ([AB SLC500])

GT 27 GT 25 GT 23 GT 21 GS

Item	Reference
Device setting dialog	☞ Page 611 Device setting dialog ([AB SLC500])
Specifications of bit devices	☞ Page 612 Monitoring-supported bit devices ([AB SLC500])
	☞ Page 612 Availability of writing/reading data to/from bit devices ([AB SLC500])
Specifications of word devices	☞ Page 613 Monitoring-supported word devices ([AB SLC500])
	☞ Page 613 Availability of writing/reading data to/from word devices ([AB SLC500])

Device setting dialog ([AB SLC500])

Set a device to be monitored.

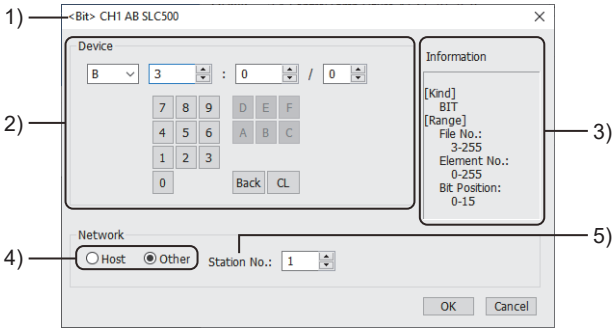

1) Title

Data type and channel number of the device to be set

2) [Device]

Set the device name and device number.

If a bit number needs to be specified, the setting item is displayed.

Example) Setting of B3:0/0

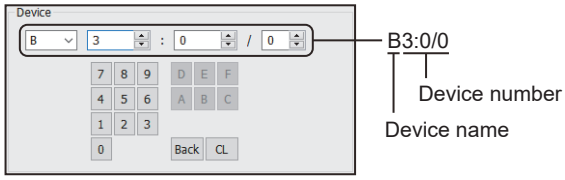

3) [Information]

Displays the setting range of each setting item according to the selected device.

4) Station type specification

Select the station type (host or other) for the controller to be monitored.

- [Host]: The controller to be monitored is the host station.
- [Other]: The controller to be monitored is not the host station.

5) [Station No.]

This item appears when [Other] is selected for the station type.

Specify a station number.

A

Monitoring-supported bit devices ([AB SLC500])

The following table shows monitoring-supported bit devices.

To check whether writing/reading data to/from each device is available, refer to the following.

☞ Page 612 Availability of writing/reading data to/from bit devices ([AB SLC500])

For the formats of devices, refer to the following.

GT Designer3 (GOT2000) Screen Design Manual

The GOT reads the value from a device and then write a value to the device.

Do not change the device value with a sequence program until the GOT completes writing a value to the device.

○: Available

×: Not available

Device name		Device No. representation	Setting range	Specifications of EG devices*1	
				Assignment to EG devices	Access using a client
T	Timer (completion bit)	Decimal	T(File No.):(Element No.)/13(DN) Notation example: T4:255/13(DN) • File No. (decimal): 4 to 255 • Element No. (decimal): 0 to 255	○	×
	Timer (timing bit)		T(File No.):(Element No.)/14(TT) Notation example: T4:255/14(TT) • File No. (decimal): 4 to 255 • Element No. (decimal): 0 to 255		
C	Counter (completion bit)	Decimal	C(File No.):(Element No.)/13(DN) Notation example: C5:255/13(DN) • File No. (decimal): 5 to 255 • Element No. (decimal): 0 to 255	○	×
	Counter (down counter)		C(File No.):(Element No.)/14(CD) Notation example: C5:255/14(CD) • File No. (decimal): 5 to 255 • Element No. (decimal): 0 to 255		
	Counter (up counter)		C(File No.):(Element No.)/15(CU) Notation example: C5:255/15(CU) • File No. (decimal): 5 to 255 • Element No. (decimal): 0 to 255		
B	Bit	Decimal	B(File No.):(Element No.)/(Bit position) Notation example: B3:255/0 • File No. (decimal): 3 to 255 • Element No. (decimal): 0 to 255 • Bit position (decimal): 0 to 15	○	○

*1 For the devices assigned to EG devices (gateway devices) and the compatible clients, refer to the following.
GT Designer3 (GOT2000) Screen Design Manual

Availability of writing/reading data to/from bit devices ([AB SLC500])

The following shows whether writing/reading data to/from bit devices is available by device type.

When the device type is other than the bit type, set the device No. in multiples of 16.

R/W: Both read and write

R/-: Read only

-/W: Write only

-/-: No read/write access

Device name	Device type				
	Bit	Byte (8 bits)	Word (16 bits)	Double-word (32 bits)	Quad-word (64 bits)
T	R/W	-/-	-/-	-/-	-/-
C	R/W	-/-	-/-	-/-	-/-
B	R/W	-/-	-/-	-/-	-/-

Monitoring-supported word devices ([AB SLC500])

The following table shows monitoring-supported word devices.

To check whether writing/reading data to/from each device is available, refer to the following.

☞ Page 613 Availability of writing/reading data to/from word devices ([AB SLC500])

For the formats of devices, refer to the following.

GT Designer3 (GOT2000) Screen Design Manual

○: Available

×: Not available

Device name		Device No. representation	Setting range	Specifications of EG devices*1	
				Assignment to EG devices	Access using a client
T	Timer (set value)	Decimal	T(File No.):(Element No.).1(PRE) Notation example: T4:255.1(PRE) • File No. (decimal): 4 to 255 • Element No. (decimal): 0 to 255	○	×
	Timer (current value)		T(File No.):(Element No.).2(ACC) Notation example: T4:255.2(ACC) • File No. (decimal): 4 to 255 • Element No. (decimal): 0 to 255		
C	Counter (set value)	Decimal	C(File No.):(Element No.).1(PRE) Notation example: C5:255.1(PRE) • File No. (decimal): 5 to 255 • Element No. (decimal): 0 to 255	○	×
	Counter (current value)		C(File No.):(Element No.).2(ACC) Notation example: C5:255.2(ACC) • File No. (decimal): 5 to 255 • Element No. (decimal): 0 to 255		
N	Integer	Decimal	N(File No.):(Element No.) Notation example: N7:255 • File No. (decimal): 7 to 255 • Element No. (decimal): 0 to 255	○	○
B	Bit	Decimal	B(File No.):(Element No.) Notation example: B3:255 • File No. (decimal): 3 to 255 • Element No. (decimal): 0 to 255	○	○

*1 For the devices assigned to EG devices (gateway devices) and the compatible clients, refer to the following.
GT Designer3 (GOT2000) Screen Design Manual

Availability of writing/reading data to/from word devices ([AB SLC500])

The following shows whether writing/reading data to/from word devices is available by device type.

R/W: Both read and write

R/-: Read only

-/W: Write only

-/-: No read/write access

Device name	Device type			
	Word (16 bits)	Double-word (32 bits)	Quad-word (64 bits)	Bit of word data*1
T	R/W	R/-	-/-	R/W
C	R/W	R/-	-/-	R/W
N	R/W	R/W	-/-	R/W
B	R/W	R/W	-/-	-/-

*1 The GOT reads the value from a device and then write a value to the device.
Do not change the device value with a sequence program until the GOT completes writing a value to the device.

ALLEN-BRADLEY equipment ([AB MicroLogix])

GT27 GT25 GT23 GT21 GS

Item	Reference
Device setting dialog	☞ Page 614 Device setting dialog ([AB MicroLogix])
Specifications of bit devices	☞ Page 615 Monitoring-supported bit devices ([AB MicroLogix])
	☞ Page 616 Availability of writing/reading data to/from bit devices ([AB MicroLogix])
Specifications of word devices	☞ Page 617 Monitoring-supported word devices ([AB MicroLogix])
	☞ Page 618 Availability of writing/reading data to/from word devices ([AB MicroLogix])
Specifications of double-word devices	☞ Page 618 Monitoring-supported double-word devices ([AB MicroLogix])
	☞ Page 618 Availability of writing/reading data to/from double-word devices ([AB MicroLogix])

Device setting dialog ([AB MicroLogix])

Set a device to be monitored.

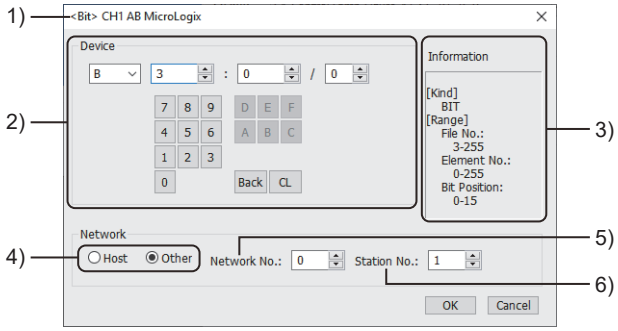

1) Title

Data type and channel number of the device to be set

2) [Device]

Set the device name and device number.

If a bit number needs to be specified, the setting item is displayed.

Example) Setting of B3:0/0

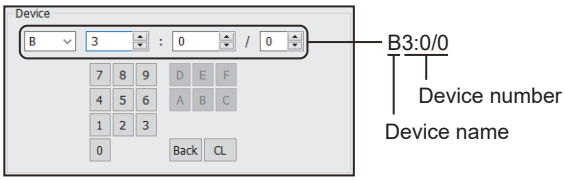

3) [Information]

Displays the setting range of each setting item according to the selected device.

4) Station type specification

Select the station type (host or other) for the controller to be monitored.

- [Host]: The controller to be monitored is the host station.
- [Other]: The controller to be monitored is not the host station.

5) [Network No.]

This item appears when [Other] is selected for the station type.

Specify a network number.

6) [Station No.]

This item appears when [Other] is selected for the station type.

Specify a station number.

Monitoring-supported bit devices ([AB MicroLogix])

The following table shows monitoring-supported bit devices.

To check whether writing/reading data to/from each device is available, refer to the following.

☞ Page 616 Availability of writing/reading data to/from bit devices ([AB MicroLogix])

For the formats of devices, refer to the following.

GT Designer3 (GOT2000) Screen Design Manual

The GOT reads the value from a device and then write a value to the device.

Do not change the device value with a sequence program until the GOT completes writing a value to the device.

○: Available

×: Not available

Device name		Device No. representation	Setting range	Specifications of EG devices*1	
				Assignment to EG devices	Access using a client
T	Timer (completion bit)	Decimal	T(File No.):(Element No.)/13(DN) Notation example: T3:255/13(DN) • File No. (decimal): 3 to 255 • Element No. (decimal): 0 to 255	○	×
	Timer (timing bit)		T(File No.):(Element No.)/14(TT) Notation example: T3:255/14(TT) • File No. (decimal): 3 to 255 • Element No. (decimal): 0 to 255		
C	Counter (completion bit)	Decimal	C(File No.):(Element No.)/13(DN) Notation example: C3:255/13(DN) • File No. (decimal): 3 to 255 • Element No. (decimal): 0 to 255	○	×
	Counter (down counter)		C(File No.):(Element No.)/14(CD) Notation example: C3:255/14(CD) • File No. (decimal): 3 to 255 • Element No. (decimal): 0 to 255		
	Counter (up counter)		C(File No.):(Element No.)/15(CU) Notation example: C3:255/15(CU) • File No. (decimal): 3 to 255 • Element No. (decimal): 0 to 255		
I	Input	Decimal	I:(Slot No.).(Element No.)/(Bit position) Notation example: I:16.7/0 • Slot No. (decimal): 0 to 16 • Element No. (decimal): 0 to 7 • Bit position (decimal): 0 to 15	○	○
O	Output	Decimal	O:(Slot No.).(Element No.)/(Bit position) Notation example: O:16.7/0 • Slot No. (decimal): 0 to 16 • Element No. (decimal): 0 to 7 • Bit position (decimal): 0 to 15	○	○
B	Bit	Decimal	B(File No.):(Element No.)/(Bit position) Notation example: B3:255/0 • File No. (decimal): 3 to 255 • Element No. (decimal): 0 to 255 • Bit position (decimal): 0 to 15	○	○

*1 For the devices assigned to EG devices (gateway devices) and the compatible clients, refer to the following.
GT Designer3 (GOT2000) Screen Design Manual

A

Availability of writing/reading data to/from bit devices ([AB MicroLogix])

The following shows whether writing/reading data to/from bit devices is available by device type.

When the device type is other than the bit type, set the device No. in multiples of 16.

R/W: Both read and write

R/-: Read only

-/W: Write only

-/-: No read/write access

Device name	Device type				
	Bit	Byte (8 bits)	Word (16 bits)	Double-word (32 bits)	Quad-word (64 bits)
T	R/W	-/-	-/-	-/-	-/-
C	R/W	-/-	-/-	-/-	-/-
I	R/W	-/-	-/-	-/-	-/-
O	R/W	-/-	-/-	-/-	-/-
B	R/W	-/-	-/-	-/-	-/-

Monitoring-supported word devices ([AB MicroLogix])

The following table shows monitoring-supported word devices.

To check whether writing/reading data to/from each device is available, refer to the following.

☞ Page 618 Availability of writing/reading data to/from word devices ([AB MicroLogix])

For the formats of devices, refer to the following.

GT Designer3 (GOT2000) Screen Design Manual

○: Available

×: Not available

Device name		Device No. representation	Setting range	Specifications of EG devices*1	
				Assignment to EG devices	Access using a client
I	Input	Decimal	I:(Slot No.).(Element No.) Notation example: I:16.0 • Slot No. (decimal): 0 to 16 • Element No. (decimal): 0 to 7	○	○
O	Output	Decimal	O:(Slot No.).(Element No.) Notation example: O:16.0 • Slot No. (decimal): 0 to 16 • Element No. (decimal): 0 to 7	○	○
T	Timer (set value)	Decimal	T(File No.):(Element No.).1(PRE) Notation example: T3:255.1(PRE) • File No. (decimal): 3 to 255 • Element No. (decimal): 0 to 255	○	×
	Timer (current value)		T(File No.):(Element No.).2(ACC) Notation example: T3:255.2(ACC) • File No. (decimal): 3 to 255 • Element No. (decimal): 0 to 255		
C	Counter (set value)	Decimal	C(File No.):(Element No.).1(PRE) Notation example: C3:255.1(PRE) • File No. (decimal): 3 to 255 • Element No. (decimal): 0 to 255	○	×
	Counter (current value)		C(File No.):(Element No.).2(ACC) Notation example: C3:255.2(ACC) • File No. (decimal): 3 to 255 • Element No. (decimal): 0 to 255		
N	Integer	Decimal	N(File No.):(Element No.) Notation example: N7:0 • File No. (decimal): 3 to 255 • Element No. (decimal): 0 to 255	○	○
B	Bit	Decimal	B(File No.):(Element No.) Notation example: B3:0 • File No. (decimal): 3 to 255 • Element No. (decimal): 0 to 255	○	○
S	Status	Decimal	S(File No.):(Device) Notation example: S2:163 • File No. (decimal): 2 • Device (decimal): 0 to 163	○	○

*1 For the devices assigned to EG devices (gateway devices) and the compatible clients, refer to the following.
GT Designer3 (GOT2000) Screen Design Manual

Availability of writing/reading data to/from word devices ([AB MicroLogix])

The following shows whether writing/reading data to/from word devices is available by device type.

R/W: Both read and write

R/-: Read only

-/W: Write only

-/-: No read/write access

Device name	Device type			
	Word (16 bits)	Double-word (32 bits)	Quad-word (64 bits)	Bit of word data*1
I	R/W	R/W	-/-	-/-
O	R/W	R/W	-/-	-/-
T	R/W	R/-	-/-	R/W
C	R/W	R/-	-/-	R/W
N	R/W	R/W	-/-	R/W
B	R/W	R/W	-/-	-/-
S	R/W	R/W	-/-	R/W

*1 The GOT reads the value from a device and then write a value to the device.
Do not change the device value with a sequence program until the GOT completes writing a value to the device.

Monitoring-supported double-word devices ([AB MicroLogix])

The following table shows monitoring-supported double-word devices.

To check whether writing/reading data to/from each device is available, refer to the following.

☞ Page 618 Availability of writing/reading data to/from double-word devices ([AB MicroLogix])

For the formats of devices, refer to the following.

GT Designer3 (GOT2000) Screen Design Manual

○: Available

×: Not available

Device name		Device No. representation	Setting range	Specifications of EG devices*1	
				Assignment to EG devices	Access using a client
L	32bit integer	Decimal	L(File No.):(Element No.) Notation example: L3:0 • File No. (decimal): 3 to 255 • Element No. (decimal): 0 to 255	×	×
F	32bit float	Decimal	F(File No.):(Element No.) Notation example: F3:0 • File No. (decimal): 3 to 255 • Element No. (decimal): 0 to 255	×	×

*1 For the devices assigned to EG devices (gateway devices) and the compatible clients, refer to the following.
GT Designer3 (GOT2000) Screen Design Manual

Availability of writing/reading data to/from double-word devices ([AB MicroLogix])

The following shows whether writing/reading data to/from double-word devices is available by device type.

R/W: Both read and write

R/-: Read only

-/W: Write only

-/-: No read/write access

Device name	Device type			
	Word (16 bits)	Double-word (32 bits)	Quad-word (64 bits)	Bit of double-word data
L	-/-	R/W	-/-	-/-
F	-/-	R/W	-/-	-/-

ALLEN-BRADLEY equipment ([AB MicroLogix (Extended)])

GT 27 GT 25 GT 23

Contact our company for the device specifications when connecting the GOT to ALLEN-BRADLEY equipment.

ALLEN-BRADLEY equipment ([AB Control/CompactLogix])

GT 27 GT 25 GT 23 GT 21 GS

Item	Reference
Device setting dialog	☞ Page 619 Device setting dialog ([AB Control/CompactLogix])
Specifications of bit devices	☞ Page 620 Monitoring-supported bit devices ([AB Control/CompactLogix])
	☞ Page 620 Availability of writing/reading data to/from bit devices ([AB Control/CompactLogix])
Specifications of word devices	☞ Page 621 Monitoring-supported word devices ([AB Control/CompactLogix])
	☞ Page 621 Availability of writing/reading data to/from word devices ([AB Control/CompactLogix])
Specifications of double-word devices	☞ Page 622 Monitoring-supported double-word devices ([AB Control/CompactLogix])
	☞ Page 622 Availability of writing/reading data to/from double-word devices ([AB Control/CompactLogix])

Device setting dialog ([AB Control/CompactLogix])

Set a device to be monitored.

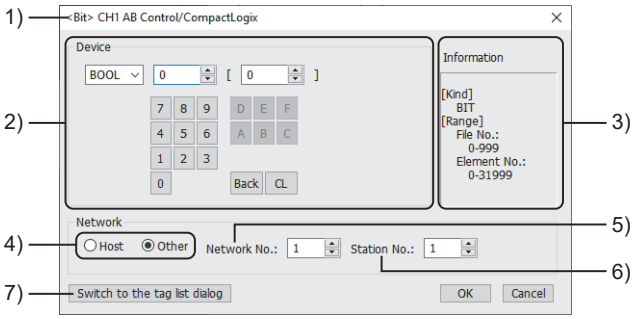

1) Title

Data type and channel number of the device to be set

2) [Device]

Set the device name and device number.

If a bit number needs to be specified, the setting item is displayed.

Example) Setting of BOOL0[0]

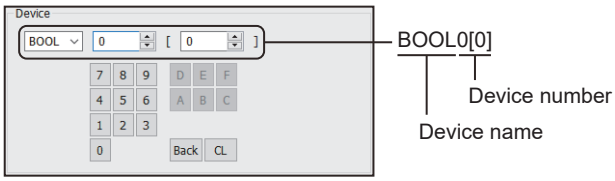

3) [Information]

Displays the setting range of each setting item according to the selected device.

4) Station type specification

Select the station type (host or other) for the controller to be monitored.

- [Host]: The controller to be monitored is the host station.
- [Other]: The controller to be monitored is not the host station.

5) [Network No.]

This item appears when [Other] is selected for the station type.

Specify a network number.

6) [Station No.]

This item appears when [Other] is selected for the station type.

Specify a station number.

7) [Switch to the tag list dialog] button

You can open the tag list dialog to check the tags imported to GT Designer3.

For the details, refer to the following.

GT Designer3 (GOT2000) Screen Design Manual

Monitoring-supported bit devices ([AB Control/CompactLogix])

The following table shows monitoring-supported bit devices.

To check whether writing/reading data to/from each device is available, refer to the following.

Page 620 Availability of writing/reading data to/from bit devices ([AB Control/CompactLogix])

For the formats of devices, refer to the following.

GT Designer3 (GOT2000) Screen Design Manual

○: Available

×: Not available

Device name		Device No. representation	Setting range	Specifications of EG devices*1	
				Assignment to EG devices	Access using a client
BOOL	Bit data	Decimal	BOOL(File No.):[(Element No.)] Notation example: BOOL999[0] • File No. (decimal): 0 to 999 • Element No. (decimal): 0 to 31999	○	○

*1 For the devices assigned to EG devices (gateway devices) and the compatible clients, refer to the following.
GT Designer3 (GOT2000) Screen Design Manual

Availability of writing/reading data to/from bit devices ([AB Control/CompactLogix])

The following shows whether writing/reading data to/from bit devices is available by device type.

When the device type is other than the bit type, set the device No. in multiples of 16.

R/W: Both read and write

R/-: Read only

-/W: Write only

-/-: No read/write access

Device name	Device type				
	Bit	Byte (8 bits)	Word (16 bits)	Double-word (32 bits)	Quad-word (64 bits)
BOOL	R/W	-/-	-/-	-/-	-/-

Monitoring-supported word devices ([AB Control/CompactLogix])

The following table shows monitoring-supported word devices.

To check whether writing/reading data to/from each device is available, refer to the following.

☞ Page 621 Availability of writing/reading data to/from word devices ([AB Control/CompactLogix])

For the formats of devices, refer to the following.

GT Designer3 (GOT2000) Screen Design Manual

○: Available

×: Not available

Device name		Device No. representation	Setting range	Specifications of EG devices*1	
				Assignment to EG devices	Access using a client
INT	Word data	Decimal	INT(File No.):[(Element No.)] Notation example: INT999[0] • File No. (decimal): 0 to 999 • Element No. (decimal): 0 to 999	○	○

*1 For the devices assigned to EG devices (gateway devices) and the compatible clients, refer to the following.
GT Designer3 (GOT2000) Screen Design Manual

Availability of writing/reading data to/from word devices ([AB Control/CompactLogix])

The following shows whether writing/reading data to/from word devices is available by device type.

R/W: Both read and write

R/-: Read only

-/W: Write only

-/-: No read/write access

Device name	Device type			
	Word (16 bits)	Double-word (32 bits)	Quad-word (64 bits)	Bit of word data
INT	R/W	R/W	-/-	R/W

A

Monitoring-supported double-word devices ([AB Control/CompactLogix])

The following table shows monitoring-supported double-word devices.

To check whether writing/reading data to/from each device is available, refer to the following.

☞ Page 622 Availability of writing/reading data to/from double-word devices ([AB Control/CompactLogix])

For the formats of devices, refer to the following.

GT Designer3 (GOT2000) Screen Design Manual

○: Available

×: Not available

Device name		Device No. representation	Setting range	Specifications of EG devices*1	
				Assignment to EG devices	Access using a client
DINT	Double-word data	Decimal	DINT(File No.):[(Element No.)] Notation example: DINT999[0] • File No. (decimal): 0 to 999 • Element No. (decimal): 0 to 999	×	×
REAL	Floating point data	Decimal	REAL(File No.):[(Element No.)] Notation example: REAL999[0] • File No. (decimal): 0 to 999 • Element No. (hexadecimal): 0 to 999	×	×

*1 For the devices assigned to EG devices (gateway devices) and the compatible clients, refer to the following.
GT Designer3 (GOT2000) Screen Design Manual

Availability of writing/reading data to/from double-word devices ([AB Control/CompactLogix])

The following shows whether writing/reading data to/from double-word devices is available by device type.

R/W: Both read and write

R/-: Read only

-/W: Write only

-/-: No read/write access

Device name	Device type			
	Word (16 bits)	Double-word (32 bits)	Quad-word (64 bits)	Bit of double-word data
DINT	-/-	R/W	-/-	-/-
REAL	-/-	R/W	-/-	-/-

ALLEN-BRADLEY equipment ([AB Control/CompactLogix(Tag)])

GT 27 GT 25 GT 23

Item	Reference
Device setting dialog	☞ Page 623 Device setting dialog ([AB Control/CompactLogix(Tag)])
Device specifications	☞ Page 623 Monitoring-supported devices ([AB Control/CompactLogix(Tag)])

Device setting dialog ([AB Control/CompactLogix(Tag)])

Set a device to be monitored.

In the device setting dialog, only GOT internal devices are settable.

For how to set AB native tags, refer to the following.

📖GT Designer3 (GOT2000) Screen Design Manual

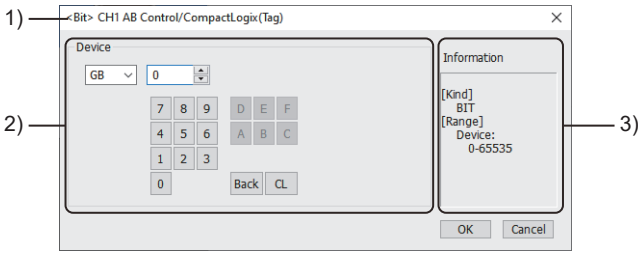

1) Title

Data type and channel number of the device to be set

2) [Device]

Set the device name and device number.

If a bit number needs to be specified, the setting item is displayed.

3) [Information]

Displays the setting range of each setting item according to the selected device.

Monitoring-supported devices ([AB Control/CompactLogix(Tag)])

When this communication driver is used, the AB native tags are usable in the device setting.

For details on usable AB native tags, refer to the following.

📖GT Designer3 (GOT2000) Screen Design Manual

GE equipment ([GE Series 90])

GT 27 GT 25 GT 23

Item	Reference
Device setting dialog	☞ Page 624 Device setting dialog ([GE Series 90])
Specifications of bit devices	☞ Page 625 Monitoring-supported bit devices ([GE Series 90])
	☞ Page 625 Availability of writing/reading data to/from bit devices ([GE Series 90])
Specifications of word devices	☞ Page 626 Monitoring-supported word devices ([GE Series 90])
	☞ Page 626 Availability of writing/reading data to/from word devices ([GE Series 90])

Device setting dialog ([GE Series 90])

Set a device to be monitored.

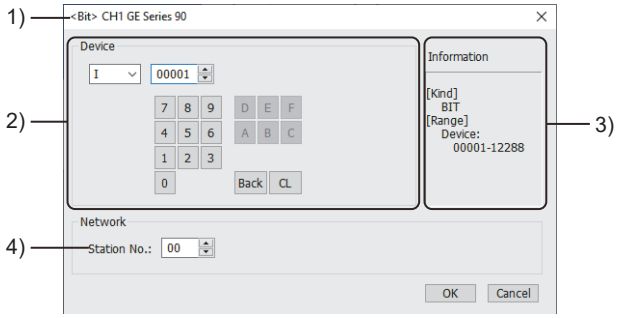

1) Title

Data type and channel number of the device to be set

2) [Device]

Set the device name and device number.

If a bit number needs to be specified, the setting item is displayed.

Example) Setting of I00001

3) [Information]

Displays the setting range of each setting item according to the selected device.

4) [Station No.]

Specify a station number.

The setting range is [00] to [31].

Monitoring-supported bit devices ([GE Series 90])

The following table shows monitoring-supported bit devices.

To check whether writing/reading data to/from each device is available, refer to the following.

☞ Page 625 Availability of writing/reading data to/from bit devices ([GE Series 90])

For the formats of devices, refer to the following.

GT Designer3 (GOT2000) Screen Design Manual

○: Available

×: Not available

Device name		Device No. representation	Setting range	Specifications of EG devices*1	
				Assignment to EG devices	Access using a client
I	Input	Decimal	00001 to 12288	○	○
Q	Output	Decimal	00001 to 12288	○	○
M	Internal	Decimal	00001 to 12288	○	○
T	Temporary	Decimal	001 to 256	○	○
S	System status	Decimal	001 to 128	○	×
SA	System status	Decimal	001 to 128	○	○
SB	System status	Decimal	001 to 128	○	○
SC	System status	Decimal	001 to 128	○	○
G	Global data	Decimal	0001 to 7680	○	○

*1 For the devices assigned to EG devices (gateway devices) and the compatible clients, refer to the following.
GT Designer3 (GOT2000) Screen Design Manual

Availability of writing/reading data to/from bit devices ([GE Series 90])

The following shows whether writing/reading data to/from bit devices is available by device type.

When the device type is other than the bit type, set the device No. in multiples of 16.

R/W: Both read and write

R/-: Read only

-/W: Write only

-/-: No read/write access

Device name	Device type				
	Bit	Byte (8 bits)	Word (16 bits)	Double-word (32 bits)	Quad-word (64 bits)
I	R/W	-/-	R/W	-/-	-/-
Q	R/W	-/-	R/W	-/-	-/-
M	R/W	-/-	R/W	-/-	-/-
T	R/W	-/-	R/W	-/-	-/-
S	R/-	-/-	R/-	-/-	-/-
SA	R/W	-/-	R/W	-/-	-/-
SB	R/W	-/-	R/W	-/-	-/-
SC	R/W	-/-	R/W	-/-	-/-
G	R/W	-/-	R/W	-/-	-/-

Monitoring-supported word devices ([GE Series 90])

The following table shows monitoring-supported word devices.

To check whether writing/reading data to/from each device is available, refer to the following.

☞ Page 626 Availability of writing/reading data to/from word devices ([GE Series 90])

For the formats of devices, refer to the following.

GT Designer3 (GOT2000) Screen Design Manual

○: Available

×: Not available

Device name		Device No. representation	Setting range	Specifications of EG devices*1	
				Assignment to EG devices	Access using a client
R	System register	Decimal	00001 to 32640	○	○
AI	Analog input register	Decimal	00001 to 32640	○	○
AQ	Analog output register	Decimal	00001 to 32640	○	○

*1 For the devices assigned to EG devices (gateway devices) and the compatible clients, refer to the following.
GT Designer3 (GOT2000) Screen Design Manual

Availability of writing/reading data to/from word devices ([GE Series 90])

The following shows whether writing/reading data to/from word devices is available by device type.

R/W: Both read and write

R/-: Read only

-/W: Write only

-/-: No read/write access

Device name	Device type			
	Word (16 bits)	Double-word (32 bits)	Quad-word (64 bits)	Bit of word data
R	R/W	R/W	-/-	R/W
AI	R/W	R/W	-/-	R/W
AQ	R/W	R/W	-/-	R/W

LS IS equipment ([LS Industrial Systems XGK])

GT27 GT25 GT23 GT21 GS

Not available to GT2105-Q.

Item	Reference
Device setting dialog	☞ Page 627 Device setting dialog ([LS Industrial Systems XGK])
Specifications of bit devices	☞ Page 628 Monitoring-supported bit devices ([LS Industrial Systems XGK])
	☞ Page 629 Availability of writing/reading data to/from bit devices ([LS Industrial Systems XGK])
Specifications of word devices	☞ Page 628 Monitoring-supported bit devices ([LS Industrial Systems XGK])
	☞ Page 629 Availability of writing/reading data to/from bit devices ([LS Industrial Systems XGK])

Device setting dialog ([LS Industrial Systems XGK])

Set a device to be monitored.

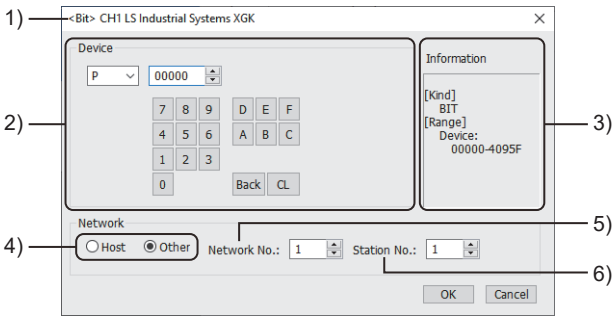

1)Title

Data type and channel number of the device to be set

2)[Device]

Set the device name and device number.

If a bit number needs to be specified, the setting item is displayed.

Example) Setting of P00000

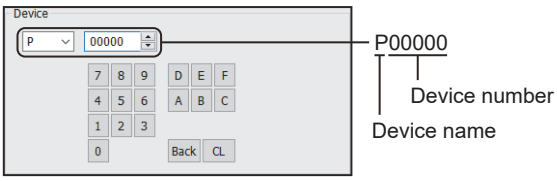

3)[Information]

Displays the setting range of each setting item according to the selected device.

4)Station type specification

Select the station type (host or other) for the controller to be monitored.

- [Host]: The controller to be monitored is the host station.
- [Other]: The controller to be monitored is not the host station.

5)[Network No.]

This item appears when [Other] is selected for the station type.

Specify a network number.

The setting range is [1] to [239].

6)[Station No.]

This item appears when [Other] is selected for the station type.

Specify a station number.

The setting range is [1] to [64].

Monitoring-supported bit devices ([LS Industrial Systems XGK])

The following table shows monitoring-supported bit devices.

To check whether writing/reading data to/from each device is available, refer to the following.

☞ Page 629 Availability of writing/reading data to/from bit devices ([LS Industrial Systems XGK])

○: Available

×: Not available

Device name		Device No. representation	Setting range	Specifications of EG devices*1	
				Assignment to EG devices	Access using a client
P	I/O Relay	Decimal + hexadecimal	P(Device)(Bit No.) Notation example: P40950 The rightmost digit is a bit address. • Device (decimal): 0 to 4095 • Bit No. (hexadecimal): 0 to F	○	○
L	Link relay	Decimal + hexadecimal	L(Device)(Bit No.) Notation example: L112630 The rightmost digit is a bit address. • Device (decimal): 0 to 11263 • Bit No. (hexadecimal): 0 to F	○	○
M	Auxiliary relay	Decimal + hexadecimal	M(Device)(Bit No.) Notation example: M40950 The rightmost digit is a bit address. • Device (decimal): 0 to 4095 • Bit No. (hexadecimal): 0 to F	○	○
K	Keep Relay	Decimal + hexadecimal	K(Device)(Bit No.) Notation example: K40950 The rightmost digit is a bit address. • Device (decimal): 0 to 4095 • Bit No. (hexadecimal): 0 to F	○	○
T	Timer contact	Decimal	0000 to 8191	○	○ (Not usable as word data)
C	Counter contact	Decimal	0000 to 4095	○	○ (Not usable as word data)
F	Special relay	Decimal + hexadecimal	F(Device)(Bit No.) Notation example: F40950 The rightmost digit is a bit address. • Device (decimal): 0 to 4095 • Bit No. (hexadecimal): 0 to F	○	○

*1 For the devices assigned to EG devices (gateway devices) and the compatible clients, refer to the following.
GT Designer3 (GOT2000) Screen Design Manual

Availability of writing/reading data to/from bit devices ([LS Industrial Systems XGK])

The following shows whether writing/reading data to/from bit devices is available by device type.

When the device type is other than the bit type, set the device No. in multiples of 16.

R/W: Both read and write

R/-: Read only

-/W: Write only

-/-: No read/write access

Device name	Device type				
	Bit	Byte (8 bits)	Word (16 bits)	Double-word (32 bits)	Quad-word (64 bits)
P	R/W	-/-	R/W	-/-	-/-
L	R/W	-/-	R/W	-/-	-/-
M	R/W	-/-	R/W	-/-	-/-
K	R/W	-/-	R/W	-/-	-/-
T	R/W	-/-	-/-	-/-	-/-
C	R/W	-/-	-/-	-/-	-/-
F*1	R/W	-/-	R/W	-/-	-/-

*1 Data cannot be written to F00000 to F1023F.

Monitoring-supported word devices ([LS Industrial Systems XGK])

The following table shows monitoring-supported word devices.

To check whether writing/reading data to/from each device is available, refer to the following.

☞ Page 629 Availability of writing/reading data to/from bit devices ([LS Industrial Systems XGK])

○: Available

×: Not available

Device name		Device No. representation	Setting range	Specifications of EG devices*1	
				Assignment to EG devices	Access using a client
D	Data Register	Decimal	000000 to 524287	○	○
R	File Register	Decimal	00000 to 32767	○	○
ZR	File Register	Decimal	000000 to 524287	○	○
U*2	Analog Data Register	Hexadecimal + decimal	U(BaseNo.)(SlotNo.).(Special module No.) Notation example: U7F.00 • BaseNo. (hexadecimal): 0 to 7 • SlotNo. (hexadecimal): 0 to F • Special module No. (decimal): 00 to 31	○	○
N	Comm. Data Register	Decimal	00000 to 21503	○	○
Z	Index Register	Decimal	000 to 255	○	○
T	Timer current value	Decimal	0000 to 8191	○	○ (Not usable as bit data)
C	Counter current value	Decimal	0000 to 4095	○	○ (Not usable as bit data)

*1 For the devices assigned to EG devices (gateway devices) and the compatible clients, refer to the following.
GT Designer3 (GOT2000) Screen Design Manual

*2 When the device type is the double-word (32 bits) type, set an even number for the special module number only.

Availability of writing/reading data to/from word devices ([LS Industrial Systems XGK])

The following shows whether writing/reading data to/from word devices is available by device type.

R/W: Both read and write

R/-: Read only

-/W: Write only

-/-: No read/write access

Device name	Device type			
	Word (16 bits)	Double-word (32 bits)	Quad-word (64 bits)	Bit of word data
D	R/W	R/W	-/-	R/W
R	R/W	R/W	-/-	R/W
ZR	R/W	R/W	-/-	R/W
U	R/W	R/W	-/-	R/W
N	R/W	R/W	-/-	R/W
Z	R/W	R/W	-/-	R/W
T	R/W	R/W	-/-	-/-
C	R/W	R/W	-/-	-/-

LS IS equipment ([LS Industrial Systems MASTER-K])

GT 27 GT 25 GT 23 GT 21 GS

Item	Reference
Device setting dialog	☞ Page 631 Device setting dialog ([LS Industrial Systems MASTER-K])
Specifications of bit devices	☞ Page 632 Monitoring-supported bit devices ([LS Industrial Systems MASTER-K])
	☞ Page 633 Availability of writing/reading data to/from bit devices ([LS Industrial Systems MASTER-K])
Specifications of word devices	☞ Page 633 Monitoring-supported word devices ([LS Industrial Systems MASTER-K])
	☞ Page 634 Availability of writing/reading data to/from word devices ([LS Industrial Systems MASTER-K])

Device setting dialog ([LS Industrial Systems MASTER-K])

Set a device to be monitored.

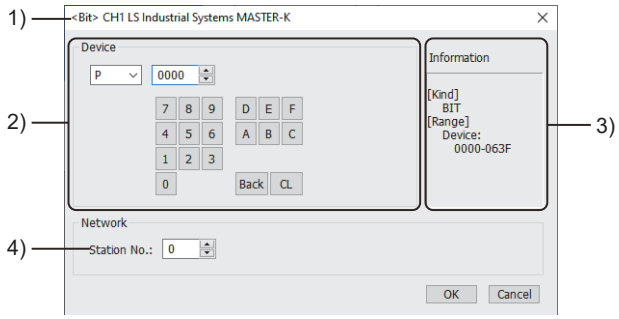

1) Title

Data type and channel number of the device to be set

2) [Device]

Set the device name and device number.

If a bit number needs to be specified, the setting item is displayed.

Example) Setting of P0000

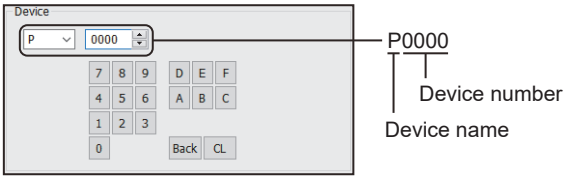

3) [Information]

Displays the setting range of each setting item according to the selected device.

4) [Station No.]

This item appears when [Selection] is selected for the monitor target specification.

The setting range is [0] to [31] (direct) or [100] to [115] (indirect).

For indirect specification of a station number, refer to the following.

☞ Page 632 Indirect specification of a station number ([LS Industrial Systems MASTER-K])

A

■Indirect specification of a station number ([LS Industrial Systems MASTER-K])

When you specify any of 100 to 115 for the station number, the value of the corresponding GOT data register (GD10 to GD25) is used as the station number.

The following shows the correspondence between station number setting values and GOT data registers (GD).

Station No.	GOT data register (GD)	Setting range
100	GD10	[0] to [31] Setting a value outside the above range causes a device range error.
101	GD11	
:	:	
114	GD24	
115	GD25	

Monitoring-supported bit devices ([LS Industrial Systems MASTER-K])

The following table shows monitoring-supported bit devices.

To check whether writing/reading data to/from each device is available, refer to the following.

☞ Page 633 Availability of writing/reading data to/from bit devices ([LS Industrial Systems MASTER-K])

For the formats of devices, refer to the following.

📖GT Designer3 (GOT2000) Screen Design Manual

○: Available

×: Not available

Device name		Device No. representation	Setting range	Specifications of EG devices*1	
				Assignment to EG devices	Access using a client
P	I/O relay	Decimal + hexadecimal	P(Device)(Bit No.) Notation example: P0630 • Device (decimal): 000 to 063 • Bit No. (hexadecimal): 0 to F	○	○ (Not usable as word data)
L	Link relay	Decimal + hexadecimal	L(Device)(Bit No.) Notation example: L0630 • Device (decimal): 000 to 063 • Bit No. (hexadecimal): 0 to F	○	○ (Not usable as word data)
M	Auxiliary relay	Decimal + hexadecimal	M(Device)(Bit No.) Notation example: M1910 • Device (decimal): 000 to 191 • Bit No. (hexadecimal): 0 to F	○	○ (Not usable as word data)
K	Keep relay	Decimal + hexadecimal	K(Device)(Bit No.) Notation example: K0310 • Device (decimal): 000 to 031 • Bit No. (hexadecimal): 0 to F	○	○ (Not usable as word data)
T	Timer (contact)	Decimal	0 to 255	○	○ (Not usable as word data)
C	Counter (contact)	Decimal	0 to 255	○	○ (Not usable as word data)
F	Special relay	Decimal + hexadecimal	F(Device)(Bit No.) Notation example: F0630 • Device (decimal): 000 to 063 • Bit No. (hexadecimal): 0 to F	○	○ (Not usable as word data)

*1 For the devices assigned to EG devices (gateway devices) and the compatible clients, refer to the following.
📖GT Designer3 (GOT2000) Screen Design Manual

Availability of writing/reading data to/from bit devices ([LS Industrial Systems MASTER-K])

The following shows whether writing/reading data to/from bit devices is available by device type.

When the device type is other than the bit type, set the device No. in multiples of 16.

R/W: Both read and write

R/-: Read only

-/W: Write only

-/-: No read/write access

Device name	Device type				
	Bit	Byte (8 bits)	Word (16 bits)	Double-word (32 bits)	Quad-word (64 bits)
P	R/W	-/-	-/-	-/-	-/-
L	R/W	-/-	-/-	-/-	-/-
M	R/W	-/-	-/-	-/-	-/-
K	R/W	-/-	-/-	-/-	-/-
T	R/W	-/-	-/-	-/-	-/-
C	R/W	-/-	-/-	-/-	-/-
F	R/-	-/-	-/-	-/-	-/-

Monitoring-supported word devices ([LS Industrial Systems MASTER-K])

The following table shows monitoring-supported word devices.

To check whether writing/reading data to/from each device is available, refer to the following.

☞ Page 634 Availability of writing/reading data to/from word devices ([LS Industrial Systems MASTER-K])

For the formats of devices, refer to the following.

📖GT Designer3 (GOT2000) Screen Design Manual

○: Available

×: Not available

Device name		Device No. representation	Setting range	Specifications of EG devices*1	
				Assignment to EG devices	Access using a client
T	Timer (current value)	Decimal	0 to 255	○	○ (Not usable as bit data)
C	Counter (current value)	Decimal	0 to 255	○	○ (Not usable as bit data)
D	Data register	Decimal	0 to 9999	○	○ (Not usable as bit data)
F	Special relay	Decimal	000 to 063	○	○ (Not usable as bit data)
P	I/O relay	Decimal	000 to 063	○	○ (Not usable as bit data)
M	Auxiliary relay	Decimal	000 to 191	○	○ (Not usable as bit data)
K	Keep relay	Decimal	000 to 031	○	○ (Not usable as bit data)
L	Link relay	Decimal	000 to 063	○	○ (Not usable as bit data)

Device name		Device No. representation	Setting range	Specifications of EG devices*1	
				Assignment to EG devices	Access using a client
S	Step controller	Decimal	0 to 99	○	○ (Not usable as bit data)

*1 For the devices assigned to EG devices (gateway devices) and the compatible clients, refer to the following.
GT Designer3 (GOT2000) Screen Design Manual

Availability of writing/reading data to/from word devices ([LS Industrial Systems MASTER-K])

The following shows whether writing/reading data to/from word devices is available by device type.

R/W: Both read and write

R/-: Read only

-/W: Write only

-/-: No read/write access

Device name	Device type			
	Word (16 bits)	Double-word (32 bits)	Quad-word (64 bits)	Bit of word data
T	R/W	-/-	-/-	-/-
C	R/W	-/-	-/-	-/-
D	R/W	R/W	-/-	-/-
F	R/-	R/-	-/-	-/-
P	R/W	R/W	-/-	-/-
M	R/W	R/W	-/-	-/-
K	R/W	R/W	-/-	-/-
L	R/W	R/W	-/-	-/-
S	R/W	-/-	-/-	-/-

MITSUBISHI INDIA equipment ([MEI Nexgenie])

GT 27 GT 25 GT 23 GT 21 GS

Item	Reference
Device setting dialog	☞ Page 635 Device setting dialog ([MEI Nexgenie])
Specifications of bit devices	☞ Page 636 Monitoring-supported bit devices ([MEI Nexgenie])
	☞ Page 636 Availability of writing/reading data to/from bit devices ([MEI Nexgenie])
Specifications of word devices	☞ Page 637 Monitoring-supported word devices ([MEI Nexgenie])
	☞ Page 637 Availability of writing/reading data to/from word devices ([MEI Nexgenie])

Device setting dialog ([MEI Nexgenie])

Set a device to be monitored.

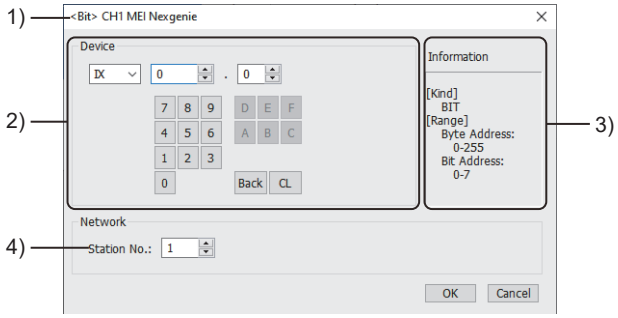

1) Title

Data type and channel number of the device to be set

2) [Device]

Set the device name and device number.

If a bit number needs to be specified, the setting item is displayed.

Example) Setting of IX0.0

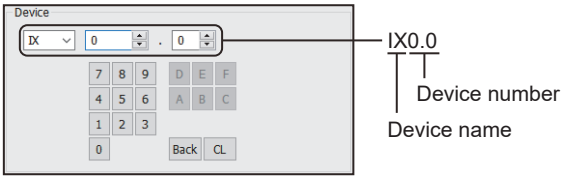

3) [Information]

Displays the setting range of each setting item according to the selected device.

4) [Station No.]

This item appears when [Selection] is selected for the monitor target specification.

The setting range is [1] to [247].

Monitoring-supported bit devices ([MEI Nexgenie])

The following table shows monitoring-supported bit devices.

To check whether writing/reading data to/from each device is available, refer to the following.

☞ Page 636 Availability of writing/reading data to/from bit devices ([MEI Nexgenie])

For the formats of devices, refer to the following.

GT Designer3 (GOT2000) Screen Design Manual

○: Available

×: Not available

Device name		Device No. representation	Setting range	Specifications of EG devices*1	
				Assignment to EG devices	Access using a client
IX	Input	Decimal + octal	IX(Byte address).(Bit address) Notation example: IX255.0 • Byte address (decimal): 0 to 255 • Bit address (octal): 0 to 7	×	×
QX	Output	Decimal + octal	QX(Byte address).(Bit address) Notation example: QX255.0 • Byte address (decimal): 0 to 255 • Bit address (octal): 0 to 7	×	×
MX	Marker	Decimal + octal	MX(Byte address).(Bit address) Notation example: MX8191.0 • Byte address (decimal): 0 to 8191 • Bit address (octal): 0 to 7	×	×

*1 For the devices assigned to EG devices (gateway devices) and the compatible clients, refer to the following.
GT Designer3 (GOT2000) Screen Design Manual

Availability of writing/reading data to/from bit devices ([MEI Nexgenie])

The following shows whether writing/reading data to/from bit devices is available by device type.

When the device type is other than the bit type, set the device No. in multiples of 16.

R/W: Both read and write

R/-: Read only

-/W: Write only

-/-: No read/write access

Device name	Device type				
	Bit	Byte (8 bits)	Word (16 bits)	Double-word (32 bits)	Quad-word (64 bits)
IX	R/-	-/-	-/-	-/-	-/-
QX	R/-	-/-	-/-	-/-	-/-
MX	R/W	-/-	-/-	-/-	-/-

Monitoring-supported word devices ([MEI Nexgenie])

The following table shows monitoring-supported word devices.

To check whether writing/reading data to/from each device is available, refer to the following.

☞ Page 637 Availability of writing/reading data to/from word devices ([MEI Nexgenie])

For the formats of devices, refer to the following.

GT Designer3 (GOT2000) Screen Design Manual

○: Available

×: Not available

Device name		Device No. representation	Setting range	Specifications of EG devices*1	
				Assignment to EG devices	Access using a client
IW	Input	Decimal	0 to 254	×	×
QW	Output	Decimal	0 to 254	×	×
MW	Marker	Decimal	0 to 32254	○	○ (Not usable as bit data)
SW	System Word	Decimal	0 to 468	○	○ (Not usable as bit data)

*1 For the devices assigned to EG devices (gateway devices) and the compatible clients, refer to the following.
GT Designer3 (GOT2000) Screen Design Manual

Availability of writing/reading data to/from word devices ([MEI Nexgenie])

The following shows whether writing/reading data to/from word devices is available by device type.

R/W: Both read and write

R/-: Read only

-/W: Write only

-/-: No read/write access

Device name	Device type			
	Word (16 bits)	Double-word (32 bits)	Quad-word (64 bits)	Bit of word data
IW	R/-	R/-	-/-	-/-
QW	R/-	R/-	-/-	-/-
MW	R/W	R/W	-/-	-/-
SW*1	R/W	R/W	-/-	-/-

*1 Some devices are read-only.
For the details, refer to the following manual.
Manual of the PLC used

SICK equipment ([SICK Flexi Soft])

GT 27 GT 25 GT 23 GT 21 GS

The device specifications are the same as those of MELSEC-WS series.

Item	Reference
Device setting dialog	☞ Page 638 Device setting dialog ([SICK Flexi Soft])
Specifications of bit devices	🕮GOT2000 Series Connection Manual (Mitsubishi Electric Products) For GT Works3 Version1
	🕮GOT2000 Series Connection Manual (Mitsubishi Electric Products) For GT Works3 Version1
Specifications of word devices	🕮GOT2000 Series Connection Manual (Mitsubishi Electric Products) For GT Works3 Version1
	🕮GOT2000 Series Connection Manual (Mitsubishi Electric Products) For GT Works3 Version1
Engineering software for SICK equipment and device representation of GT Designer3	🕮GOT2000 Series Connection Manual (Mitsubishi Electric Products) For GT Works3 Version1
Offset specifications	🕮GOT2000 Series Connection Manual (Mitsubishi Electric Products) For GT Works3 Version1

Device setting dialog ([SICK Flexi Soft])

Set a device to be monitored.

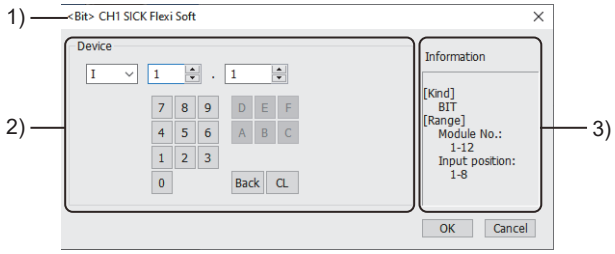

1) Title

Data type and channel number of the device to be set

2) [Device]

Set the device name and device number.

If a bit number needs to be specified, the setting item is displayed.

Example) Setting of I1.1

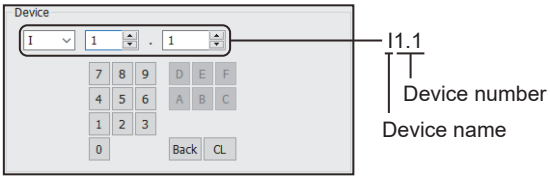

3) [Information]

Displays the setting range of each setting item according to the selected device.

SIEMENS equipment ([SIEMENS S7-200] or [SIEMENS S7-200(CN/SMART)])

GT27 GT25 GT23 GT21 GS

The item selectable for [Controller Type] in the [Controller Setting] window varies by GOT model.

• For GT27, GT25, and GT23

[SIEMENS S7-200]

• For GT21 and GS21

[SIEMENS S7-200(CN/SMART)]

Item	Reference
Device setting dialog	☞ Page 639 Device setting dialog ([SIEMENS S7-200] or [SIEMENS S7-200(CN/SMART)])
Specifications of bit devices	☞ Page 640 Monitoring-supported bit devices ([SIEMENS S7-200] or [SIEMENS S7-200(CN/SMART)])
	☞ Page 641 Availability of writing/reading data to/from bit devices ([SIEMENS S7-200] or [SIEMENS S7-200(CN/SMART)])
Specifications of word devices	☞ Page 642 Monitoring-supported word devices ([SIEMENS S7-200] or [SIEMENS S7-200(CN/SMART)])
	☞ Page 643 Availability of writing/reading data to/from word devices ([SIEMENS S7-200] or [SIEMENS S7-200(CN/SMART)])
Specifications of double-word devices	☞ Page 643 Monitoring-supported double-word devices ([SIEMENS S7-200] or [SIEMENS S7-200(CN/SMART)])
	☞ Page 643 Availability of writing/reading data to/from double-word devices ([SIEMENS S7-200] or [SIEMENS S7-200(CN/SMART)])

Device setting dialog ([SIEMENS S7-200] or [SIEMENS S7-200(CN/SMART)])

Set a device to be monitored.

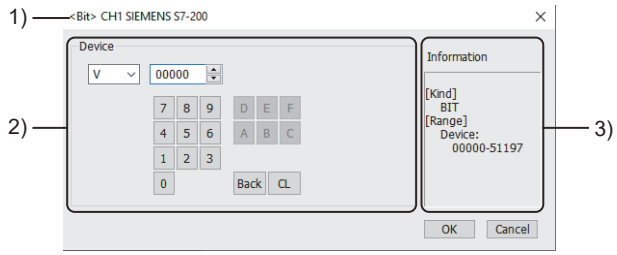

1) Title

Data type and channel number of the device to be set

2) [Device]

Set the device name and device number.

If a bit number needs to be specified, the setting item is displayed.

Example) Setting of V00000

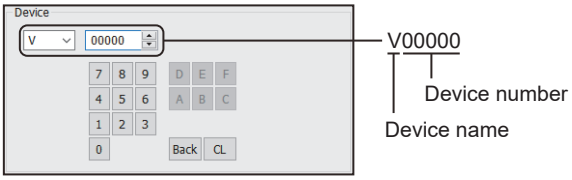

3) [Information]

Displays the setting range of each setting item according to the selected device.

Monitoring-supported bit devices ([SIEMENS S7-200] or [SIEMENS S7-200(CN/SMART)])

The following table shows monitoring-supported bit devices.

To check whether writing/reading data to/from each device is available, refer to the following.

☞ Page 641 Availability of writing/reading data to/from bit devices ([SIEMENS S7-200] or [SIEMENS S7-200(CN/SMART)])

For the formats of devices, refer to the following.

GT Designer3 (GOT2000) Screen Design Manual

○: Available

×: Not available

Device name		Device No. representation	Setting range		Specifications of EG devices*1	
			GT27, GT25, GT23, and SoftGOT2000	GT21 and GS21	Assignment to EG devices	Access using a client
I	Input relay	Decimal + octal	I(Byte address)(Bit address) Notation example: I70		○	○ (Not usable as word data)
			• Byte address (decimal): 0 to 7 • Bit address (octal): 0 to 7	• Byte address (decimal): 00 to 31 • Bit address (octal): 0 to 7		
Q*2	Output relay	Decimal + octal	Q(Byte address)(Bit address) Notation example: Q70		○	○ (Not usable as word data)
			• Byte address (decimal): 0 to 7 • Bit address (octal): 0 to 7	• Byte address (decimal): 00 to 31 • Bit address (octal): 0 to 7		
M	Bit memory	Decimal + octal	M(Byte address)(Bit address) Notation example: M310 • Byte address (decimal): 00 to 31 • Bit address (octal): 0 to 7		○	○ (Not usable as word data)
S	Sequence control relay	Decimal + octal	S(Byte address)(Bit address) Notation example: S310 • Byte address (decimal): 00 to 31 • Bit address (octal): 0 to 7		○	○
T	Timer	Decimal	0 to 255		×	×
C	Counter	Decimal	0 to 255		×	×
SM	Special memory	Decimal + octal	SM(Byte address)(Bit address) Notation example: SM1940		○	○ (Not usable as word data)
			• Byte address (decimal): 000 to 194 • Bit address (octal): 0 to 7	• Byte address (decimal): 0000 to 2047 • Bit address (octal): 0 to 7		
V	Variable memory	Decimal + octal	V(Byte address)(Bit address) Notation example: V51190		○	○ (Not usable as word data)
			• Byte address (decimal): 0000 to 5119 • Bit address (octal): 0 to 7	• Byte address (decimal): 00000 to 20479 • Bit address (octal): 0 to 7		

*1 For the devices assigned to EG devices (gateway devices) and the compatible clients, refer to the following.
GT Designer3 (GOT2000) Screen Design Manual

*2 Writing is possible only while the programmable controller is running.

Availability of writing/reading data to/from bit devices ([SIEMENS S7-200] or [SIEMENS S7-200(CN/SMART)])

The following shows whether writing/reading data to/from bit devices is available by device type.

When the device type is other than the bit type, set the device No. in multiples of 16.

R/W: Both read and write

R/-: Read only

-/W: Write only

-/-: No read/write access

Device name	Device type				
	Bit	Byte (8 bits)	Word (16 bits)	Double-word (32 bits)	Quad-word (64 bits)
I	R/W	-/-	-/-	-/-	-/-
Q	R/W	-/-	-/-	-/-	-/-
M	R/W	-/-	-/-	-/-	-/-
S	R/W	-/-	-/-	-/-	-/-
T	R/-	-/-	-/-	-/-	-/-
C	R/-	-/-	-/-	-/-	-/-
SM	R/W	-/-	-/-	-/-	-/-
V	R/W	-/-	-/-	-/-	-/-

A

Monitoring-supported word devices ([SIEMENS S7-200] or [SIEMENS S7-200(CN/SMART)])

The following table shows monitoring-supported word devices.

To check whether writing/reading data to/from each device is available, refer to the following.

☞ Page 643 Availability of writing/reading data to/from word devices ([SIEMENS S7-200] or [SIEMENS S7-200(CN/SMART)])

For the formats of devices, refer to the following.

GT Designer3 (GOT2000) Screen Design Manual

○: Available

×: Not available

Device name		Device No. representation	Setting range		Specifications of EG devices*1	
			GT27, GT25, GT23, and SoftGOT2000	GT21 and GS21	Assignment to EG devices	Access using a client
T	Timer	Decimal	0 to 255		○	○ (Not usable as bit data)
C	Counter	Decimal	0 to 255		○	○ (Not usable as bit data)
VW*2	Variable memory	Decimal	0 to 5118	0 to 20478	○	○ (Not usable as bit data)
IW*2	Input relay	Decimal	0 to 6	0 to 30	○	○ (Not usable as bit data)
QW*2*3	Output relay	Decimal	0 to 6	0 to 30	○	○ (Not usable as bit data)
MW*2	Bit memory	Decimal	0 to 30		○	○ (Not usable as bit data)
AIW*2	Analog input	Decimal	0 to 30	0 to 110	×	×
AQW*2*3	Analog output	Decimal	0 to 30	0 to 110	○	○ (Not usable as bit data)
SMW*2	Special memory	Decimal	0 to 192	0 to 2046	○	○ (Not usable as bit data)
SW*2	Sequence control relay	Decimal	0 to 30		○	○ (Not usable as bit data)

*1 For the devices assigned to EG devices (gateway devices) and the compatible clients, refer to the following.
GT Designer3 (GOT2000) Screen Design Manual

*2 When the device type is the word (16 bits) type, set an even number for the device number.
When the device type is the double-word (32 bits) type, set the device number in multiples of 4.

*3 Writing is possible only while the programmable controller is running.

Availability of writing/reading data to/from word devices ([SIEMENS S7-200] or [SIEMENS S7-200(CN/SMART)])

The following shows whether writing/reading data to/from word devices is available by device type.

R/W: Both read and write

R/-: Read only

-/W: Write only

-/-: No read/write access

Device name	Device type			
	Word (16 bits)	Double-word (32 bits)	Quad-word (64 bits)	Bit of word data
T	R/W	-/-	-/-	-/-
C	R/W	-/-	-/-	-/-
VW	R/W	R/W	-/-	-/-
IW	R/W	R/W	-/-	-/-
QW	R/W	R/W	-/-	-/-
MW	R/W	R/W	-/-	-/-
AIW	R/-	R/-	-/-	-/-
AQW	R/W	R/W	-/-	-/-
SMW	R/W	R/W	-/-	-/-
SW	R/W	R/W	-/-	-/-

Monitoring-supported double-word devices ([SIEMENS S7-200] or [SIEMENS S7-200(CN/SMART)])

The following table shows monitoring-supported double-word devices.

To check whether writing/reading data to/from each device is available, refer to the following.

☞ Page 643 Availability of writing/reading data to/from double-word devices ([SIEMENS S7-200] or [SIEMENS S7-200(CN/SMART)])

For the formats of devices, refer to the following.

GT Designer3 (GOT2000) Screen Design Manual

○: Available

×: Not available

Device name		Device No. representation	Setting range		Specifications of EG devices*1	
			GT27, GT25, GT23, and SoftGOT2000	GT21 and GS21	Assignment to EG devices	Access using a client
HC	High-speed counter	Decimal	0 to 2	0 to 5	×	×

*1 For the devices assigned to EG devices (gateway devices) and the compatible clients, refer to the following.
GT Designer3 (GOT2000) Screen Design Manual

Availability of writing/reading data to/from double-word devices ([SIEMENS S7-200] or [SIEMENS S7-200(CN/SMART)])

The following shows whether writing/reading data to/from double-word devices is available by device type.

R/W: Both read and write

R/-: Read only

-/W: Write only

-/-: No read/write access

Device name	Device type			
	Word (16 bits)	Double-word (32 bits)	Quad-word (64 bits)	Bit of double-word data
HC	-/-	R/-	-/-	-/-

SIEMENS equipment ([SIEMENS S7-300/400])

GT 27 GT 25 GT 23 GT 21 GS

Item	Reference
Device setting dialog	☞ Page 644 Device setting dialog ([SIEMENS S7-300/400])
Specifications of bit devices	☞ Page 645 Monitoring-supported bit devices ([SIEMENS S7-300/400])
	☞ Page 645 Availability of reading data to/from bit devices ([SIEMENS S7-300/400])
Specifications of word devices	☞ Page 646 Monitoring-supported word devices ([SIEMENS S7-300/400])
	☞ Page 646 Availability of writing/reading data to/from word devices ([SIEMENS S7-300/400])
Specifications of double-word devices	☞ Page 647 Monitoring-supported double-word devices ([SIEMENS S7-300/400])
	☞ Page 647 Availability of writing/reading data to/from double-word devices ([SIEMENS S7-300/400])
Notation of devices	☞ Page 648 Notation of devices ([SIEMENS S7-300/400])

Device setting dialog ([SIEMENS S7-300/400])

Set a device to be monitored.

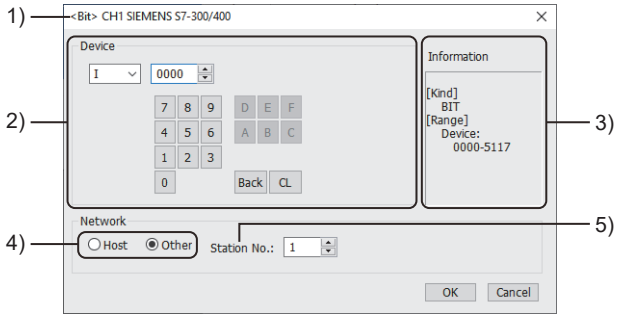

1) Title

Data type and channel number of the device to be set

2) [Device]

Set the device name and device number.

If a bit number needs to be specified, the setting item is displayed.

Example) Setting of I0000

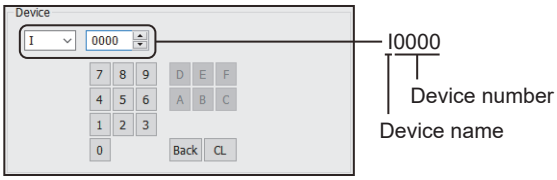

3) [Information]

Displays the setting range of each setting item according to the selected device.

4) Station type specification

Select the station type (host or other) for the controller to be monitored.

- [Host]: The controller set for [Host Address] of the [Controller Setting] window is monitored.
- [Other]: The controller having the specified station number (MPI address) is monitored.

5) [Station No.]

This item appears when [Other] is selected for the station type.

Specify a station number.

Monitoring-supported bit devices ([SIEMENS S7-300/400])

The following table shows monitoring-supported bit devices.

To check whether writing/reading data to/from each device is available, refer to the following.

☞ Page 645 Availability of reading data to/from bit devices ([SIEMENS S7-300/400])

For the formats of devices, refer to the following.

GT Designer3 (GOT2000) Screen Design Manual

The notation of device setting is different between the SIEMENS PLC peripheral software and GOT.

For the notation of devices, refer to the following.

☞ Page 648 Notation of devices ([SIEMENS S7-300/400])

○: Available

×: Not available

Device name		Device No. representation	Setting range	Specifications of EG devices*1	
				Assignment to EG devices	Access using a client
I	Input relay	Decimal + octal	I(Byte address)(Bit address) Notation example: I5110 • Byte address (decimal): 000 to 511 • Bit address (octal): 0 to 7	○	○
Q	Output relay	Decimal + octal	Q(Byte address)(Bit address) Notation example: Q5110 • Byte address (decimal): 000 to 511 • Bit address (octal): 0 to 7	○	○
M	Bit memory	Decimal + octal	M(Byte address)(Bit address) Notation example: M20470 • Byte address (decimal): 0000 to 2047 • Bit address (octal): 0 to 7	○	○

*1 For the devices assigned to EG devices (gateway devices) and the compatible clients, refer to the following.
GT Designer3 (GOT2000) Screen Design Manual

Availability of reading data to/from bit devices ([SIEMENS S7-300/400])

The following shows whether writing/reading data to/from bit devices is available by device type.

When the device type is other than the bit type, set the device No. in multiples of 16.

To use the device as word data, use the word device that has the same device name appended with "W".

Example) Use IW for I.

R/W: Both read and write

R/-: Read only

-/W: Write only

-/-: No read/write access

Device name	Device type				
	Bit	Byte (8 bits)	Word (16 bits)	Double-word (32 bits)	Quad-word (64 bits)
I	R/W	-/-	-/-	-/-	-/-
Q	R/W	-/-	-/-	-/-	-/-
M	R/W	-/-	-/-	-/-	-/-

Monitoring-supported word devices ([SIEMENS S7-300/400])

The following table shows monitoring-supported word devices.

To check whether writing/reading data to/from each device is available, refer to the following.

☞ Page 646 Availability of writing/reading data to/from word devices ([SIEMENS S7-300/400])

For the formats of devices, refer to the following.

📖GT Designer3 (GOT2000) Screen Design Manual

○: Available

×: Not available

Device name		Device No. representation	Setting range	Specifications of EG devices*1	
				Assignment to EG devices	Access using a client
DB*2*3	Data register	Decimal	DB(Data block No.).DBW(Device) Notation example: DB4095.DBW0 • Data block No. (decimal): 1 to 4095 • Device (Data word No.) (decimal): 0 to 65534 (Set an even number.)	○	○
IW*4	Input relay	Decimal	0 to 510	○	○
QW*4	Output relay	Decimal	0 to 510	○	○
MW*4	Bit memory	Decimal	0 to 2046	○	○
T*5	Timer (current value)	Decimal	0 to 511	○	○
C	Counter (current value)	Decimal	0 to 511	○	○

*1 For the devices assigned to EG devices (gateway devices) and the compatible clients, refer to the following.
📖GT Designer3 (GOT2000) Screen Design Manual

*2 It is necessary to define the data block using a peripheral software or sequence program, before using this device.

*3 Continuous access across data blocks is not possible.

*4 When the device type is the word (16 bits) type, set an even number for the device number.
When the device type is the double-word (32 bits) type, set the device number in multiples of 4.

*5 Only one device can be set as the write destination.
Do not set this device as the write destination for a function to write data to consecutive devices such as the recipe function.

Availability of writing/reading data to/from word devices ([SIEMENS S7-300/400])

The following shows whether writing/reading data to/from word devices is available by device type.

R/W: Both read and write

R/-: Read only

-/W: Write only

-/-: No read/write access

Device name	Device type			
	Word (16 bits)	Double-word (32 bits)	Quad-word (64 bits)	Bit of word data
DB	R/W	R/W	-/-	R/W
IW*1	R/W	R/W	-/-	-/-
QW*1	R/W	R/W	-/-	-/-
MW*1	R/W	R/W	-/-	-/-
T	R/W	R/W	-/-	-/-
C	R/W	R/W	-/-	-/-

*1 To use the device as bit data, use the bit device that has the same device name without "W".
Example) Use I for IW.

Monitoring-supported double-word devices ([SIEMENS S7-300/400])

The following table shows monitoring-supported double-word devices.

To check whether writing/reading data to/from each device is available, refer to the following.

☞ Page 647 Availability of writing/reading data to/from double-word devices ([SIEMENS S7-300/400])

For the formats of devices, refer to the following.

GT Designer3 (GOT2000) Screen Design Manual

○: Available

×: Not available

Device name		Device No. representation	Setting range	Specifications of EG devices*1	
				Assignment to EG devices	Access using a client
DB*2*3	Data register	Decimal	DB(Data block No.).DBD(Device) Notation example: DB4095.DBD0 • Data block No. (decimal): 1 to 4095 • Device (Data word No.) (decimal): 0 to 65532 (Set the number in multiples of 4.)	○	○

*1 For the devices assigned to EG devices (gateway devices) and the compatible clients, refer to the following.
GT Designer3 (GOT2000) Screen Design Manual

*2 It is necessary to define the data block using a peripheral software or sequence program, before using this device.

*3 Continuous access across data blocks is not possible.

Availability of writing/reading data to/from double-word devices ([SIEMENS S7-300/400])

The following shows whether writing/reading data to/from double-word devices is available by device type.

R/W: Both read and write

R/-: Read only

-/W: Write only

-/-: No read/write access

Device name	Device type			
	Word (16 bits)	Double-word (32 bits)	Quad-word (64 bits)	Bit of double-word data
DB	R/W	R/W	-/-	-/-

A

Notation of devices ([SIEMENS S7-300/400])

The notation of device setting is different between the SIEMENS PLC peripheral software and GOT.

■Notation of bit devices ([SIEMENS S7-300/400])

Notation in the GOT	Notation in the PLC
Q0007	Q0.7

■Notation of bit-specified data register ([SIEMENS S7-300/400])

Notation in the GOT	Notation in the PLC
DB1.DBW0.b0	DB1.DBX1.0
DB1.DBW0.b1	DB1.DBX1.1
:	:
DB1.DBW0.b7	DB1.DBX1.7
DB1.DBW0.b8	DB1.DBX0.0
:	:
DB1.DBW0.b15	DB1.DBX0.7
DB1.DBW2.b0	DB1.DBX3.0
:	:
DB1.DBW2.b7	DB1.DBX3.7
DB1.DBW2.b8	DB1.DBX2.0
:	:
DB1.DBW2.b15	DB1.DBX2.7
:	:

SIEMENS equipment ([SIEMENS S7(Ethernet)])

GT 27 GT 25 GT 23

Item	Reference
Device setting dialog	☞ Page 649 Device setting dialog ([SIEMENS S7(Ethernet)])
Specifications of bit devices	☞ Page 650 Monitoring-supported bit devices ([SIEMENS S7(Ethernet)])
	☞ Page 650 Availability of writing/reading data to/from bit devices ([SIEMENS S7(Ethernet)])
Specifications of word devices	☞ Page 651 Monitoring-supported word devices ([SIEMENS S7(Ethernet)])
	☞ Page 651 Availability of writing/reading data to/from word devices ([SIEMENS S7(Ethernet)])
Specifications of double-word devices	☞ Page 652 Monitoring-supported double-word devices ([SIEMENS S7(Ethernet)])
	☞ Page 652 Availability of writing/reading data to/from double-word devices ([SIEMENS S7(Ethernet)])
Notation of devices	☞ Page 648 Notation of devices ([SIEMENS S7-300/400])

Device setting dialog ([SIEMENS S7(Ethernet)])

Set a device to be monitored.

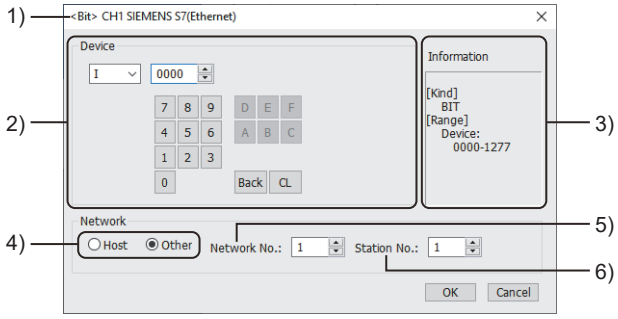

1) Title

Data type and channel number of the device to be set

2) [Device]

Set the device name and device number.

If a bit number needs to be specified, the setting item is displayed.

Example) Setting of I0000

3) [Information]

Displays the setting range of each setting item according to the selected device.

4) Station type specification

Select the station type (host or other) for the controller to be monitored.

- [Host]: The controller set for [Host Address] of the [Controller Setting] window is monitored.
- [Other]: The controller having the specified station number is monitored.

5) [Network No.]

This item appears when [Other] is selected for the station type.

Specify a network number.

6) [Station No.]

This item appears when [Other] is selected for the station type.

Specify a station number.

Monitoring-supported bit devices ([SIEMENS S7(Ethernet)])

The following table shows monitoring-supported bit devices.

To check whether writing/reading data to/from each device is available, refer to the following.

☞ Page 650 Availability of writing/reading data to/from bit devices ([SIEMENS S7(Ethernet)])

For the formats of devices, refer to the following.

GT Designer3 (GOT2000) Screen Design Manual

The notation of device setting is different between the SIEMENS PLC peripheral software and GOT.

For the notation of devices, refer to the following.

☞ Page 648 Notation of devices ([SIEMENS S7-300/400])

○: Available

×: Not available

Device name		Device No. representation	Setting range	Specifications of EG devices*1	
				Assignment to EG devices	Access using a client
I	Input relay	Decimal + octal	I(Byte address)(Bit address) Notation example: I1270 • Byte address (decimal): 000 to 127 • Bit address (octal): 0 to 7	○	○
Q	Output relay	Decimal + octal	Q(Byte address)(Bit address) Notation example: Q1270 • Byte address (decimal): 000 to 127 • Bit address (octal): 0 to 7	○	○
M	Bit memory	Decimal + octal	M(Byte address)(Bit address) Notation example: M2550 • Byte address (decimal): 000 to 255 • Bit address (octal): 0 to 7	○	○

*1 For the devices assigned to EG devices (gateway devices) and the compatible clients, refer to the following.
GT Designer3 (GOT2000) Screen Design Manual

Availability of writing/reading data to/from bit devices ([SIEMENS S7(Ethernet)])

The following shows whether writing/reading data to/from bit devices is available by device type.

When the device type is other than the bit type, set the device No. in multiples of 16.

To use the device as word data, use the word device that has the same device name appended with "W".

Example) Use IW for I.

R/W: Both read and write

R/-: Read only

-/W: Write only

-/-: No read/write access

Device name	Device type				
	Bit	Byte (8 bits)	Word (16 bits)	Double-word (32 bits)	Quad-word (64 bits)
I	R/W	-/-	-/-	-/-	-/-
Q	R/W	-/-	-/-	-/-	-/-
M	R/W	-/-	-/-	-/-	-/-

Monitoring-supported word devices ([SIEMENS S7(Ethernet)])

The following table shows monitoring-supported word devices.

To check whether writing/reading data to/from each device is available, refer to the following.

☞ Page 651 Availability of writing/reading data to/from word devices ([SIEMENS S7(Ethernet)])

For the formats of devices, refer to the following.

GT Designer3 (GOT2000) Screen Design Manual

○: Available

×: Not available

Device name		Device No. representation	Setting range	Specifications of EG devices*1	
				Assignment to EG devices	Access using a client
T*2	Timer (current value)	Decimal	0 to 255	○	○
C	Counter (current value)	Decimal	0 to 255	○	○
DB*3*4	Data register	Decimal	DB(Data block No.).DBW(Device) Notation example: DB255.DBW0 • Data block No. (decimal): 1 to 255 • Device (Data word No.) (decimal): 0 to 2046 (Set an even number.)	○	○
IW*5	Input relay	Decimal	0 to 126	○	○
QW*5	Output relay	Decimal	0 to 126	○	○
MW*5	Bit memory	Decimal	0 to 254	○	○

*1 For the devices assigned to EG devices (gateway devices) and the compatible clients, refer to the following.
GT Designer3 (GOT2000) Screen Design Manual

*2 Only one device can be set as the write destination.
Do not set this device as the write destination for a function to write data to consecutive devices such as the recipe function.

*3 It is necessary to define the data block using a peripheral software or sequence program, before using this device.

*4 Continuous access across data blocks is not possible.

*5 When the device type is the word (16 bits) type, set an even number for the device number.
When the device type is the double-word (32 bits) type, set the device number in multiples of 4.

Availability of writing/reading data to/from word devices ([SIEMENS S7(Ethernet)])

The following shows whether writing/reading data to/from word devices is available by device type.

R/W: Both read and write

R/-: Read only

-/W: Write only

-/-: No read/write access

Device name	Device type			
	Word (16 bits)	Double-word (32 bits)	Quad-word (64 bits)	Bit of word data
T	R/W	-/-	-/-	-/-
C	R/W	-/-	-/-	-/-
DB	R/W	R/W	-/-	R/W
IW*1	R/W	R/W	-/-	-/-
QW*1	R/W	R/W	-/-	-/-
MW*1	R/W	R/W	-/-	-/-

*1 To use the device as bit data, use the bit device that has the same device name without "W".
Example) Use I for IW.

Monitoring-supported double-word devices ([SIEMENS S7(Ethernet)])

The following table shows monitoring-supported double-word devices.

To check whether writing/reading data to/from each device is available, refer to the following.

☞ Page 652 Availability of writing/reading data to/from double-word devices ([SIEMENS S7(Ethernet)])

For the formats of devices, refer to the following.

GT Designer3 (GOT2000) Screen Design Manual

○: Available

×: Not available

Device name		Device No. representation	Setting range	Specifications of EG devices*1	
				Assignment to EG devices	Access using a client
DB*2*3	Data register	Decimal	DB(Data block No.).DBD(Device) Notation example: DB255.DBD0 • Data block No. (decimal): 1 to 255 • Device (Data word No.) (decimal): 0 to 2044 (Set the number in multiples of 4.)	○	○

*1 For the devices assigned to EG devices (gateway devices) and the compatible clients, refer to the following.
GT Designer3 (GOT2000) Screen Design Manual

*2 It is necessary to define the data block using a peripheral software or sequence program, before using this device.

*3 Continuous access across data blocks is not possible.

Availability of writing/reading data to/from double-word devices ([SIEMENS S7(Ethernet)])

The following shows whether writing/reading data to/from double-word devices is available by device type.

R/W: Both read and write

R/-: Read only

-/W: Write only

-/-: No read/write access

Device name	Device type			
	Word (16 bits)	Double-word (32 bits)	Quad-word (64 bits)	Bit of double-word data
DB	R/W	R/W	-/-	-/-

SIEMENS equipment ([SIEMENS OP(Ethernet)])

GT27 GT25 GT23 GT21 GS

Not available to GT2105-Q.

Item	Reference
Device setting dialog	☞ Page 653 Device setting dialog ([SIEMENS OP(Ethernet)])
Specifications of bit devices	☞ Page 654 Monitoring-supported bit devices ([SIEMENS OP(Ethernet)])
	☞ Page 655 Availability of writing/reading data to/from bit devices ([SIEMENS OP(Ethernet)])
Specifications of byte devices	☞ Page 655 Monitoring-supported byte devices ([SIEMENS OP(Ethernet)])
	☞ Page 655 Availability of writing/reading data to/from byte devices ([SIEMENS OP(Ethernet)])
Specifications of word devices	☞ Page 656 Monitoring-supported word devices ([SIEMENS OP(Ethernet)])
	☞ Page 657 Availability of writing/reading data to/from word devices ([SIEMENS OP(Ethernet)])
Specifications of double-word devices	☞ Page 658 Monitoring-supported double-word devices ([SIEMENS OP(Ethernet)])
	☞ Page 658 Availability of writing/reading data to/from double-word devices ([SIEMENS OP(Ethernet)])
Offset specifications	☞ Page 659 Offset specifications ([SIEMENS OP(Ethernet)])
Notation of devices	☞ Page 648 Notation of devices ([SIEMENS S7-300/400])

Device setting dialog ([SIEMENS OP(Ethernet)])

Set a device to be monitored.

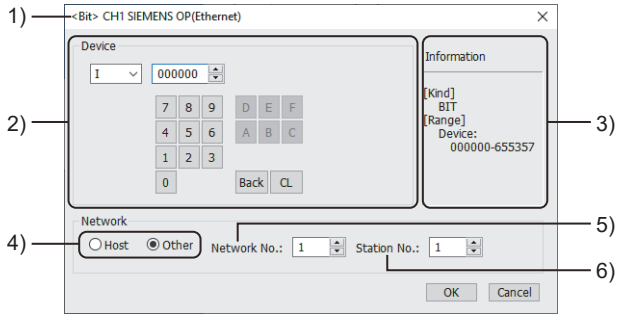

1) Title

Data type and channel number of the device to be set

2) [Device]

Set the device name and device number.

If a bit number needs to be specified, the setting item is displayed.

Example) Setting of I000000

3) [Information]

Displays the setting range of each setting item according to the selected device.

4) Station type specification

Select the station type (host or other) for the controller to be monitored.

- [Host]: The controller set for [Host Address] of the [Controller Setting] window is monitored.
- [Other]: The controller having the specified station number is monitored.

5) [Network No.]

This item appears when [Other] is selected for the station type.

Specify a network number.

6) [Station No.]

This item appears when [Other] is selected for the station type.

Specify a station number.

Monitoring-supported bit devices ([SIEMENS OP(Ethernet)])

The following table shows monitoring-supported bit devices.

To check whether writing/reading data to/from each device is available, refer to the following.

☞ Page 655 Availability of writing/reading data to/from bit devices ([SIEMENS OP(Ethernet)])

For the formats of devices, refer to the following.

GT Designer3 (GOT2000) Screen Design Manual

The notation of device setting is different between the SIEMENS PLC peripheral software and GOT.

For the notation of devices, refer to the following.

☞ Page 648 Notation of devices ([SIEMENS S7-300/400])

○: Available

×: Not available

Device name		Device No. representation	Setting range	Specifications of EG devices*1	
				Assignment to EG devices	Access using a client
I	Input relay	Decimal + octal	I(Byte address)(Bit address) Notation example: I655350 • Byte address (decimal): 00000 to 65535 • Bit address (octal): 0 to 7	○	○ (Not usable as word data)
Q*2	Output relay	Decimal + octal	Q(Byte address)(Bit address) Notation example: Q655350 • Byte address (decimal): 00000 to 65535 • Bit address (octal): 0 to 7	○	○ (Not usable as word data)
V	Variable memory	Decimal + octal	V(Byte address)(Bit address) Notation example: V204790 • Byte address (decimal): 00000 to 20479 • Bit address (octal): 0 to 7	○	○ (Not usable as word data)
M	Bit memory	Decimal + octal	M(Byte address)(Bit address) Notation example: M655350 • Byte address (decimal): 00000 to 65535 • Bit address (octal): 0 to 7	○	○ (Not usable as word data)
S	Sequence control relay	Decimal + octal	S(Byte address)(Bit address) Notation example: S310 • Byte address (decimal): 00 to 31 • Bit address (octal): 0 to 7	○	○
T	Timer	Decimal	0 to 255	○	×
C	Counter	Decimal	0 to 255	○	×
SM	Special memory	Decimal + octal	SM(Byte address)(Bit address) Notation example: SM20470 • Byte address (decimal): 0000 to 2047 • Bit address (octal): 0 to 7	○	○ (Not usable as word data)

*1 For the devices assigned to EG devices (gateway devices) and the compatible clients, refer to the following.
GT Designer3 (GOT2000) Screen Design Manual

*2 Writing is possible only while the programmable controller is running.

Availability of writing/reading data to/from bit devices ([SIEMENS OP(Ethernet)])

The following shows whether writing/reading data to/from bit devices is available by device type.

When the device type is other than the bit type, set the device No. in multiples of 16.

R/W: Both read and write

R/-: Read only

-/W: Write only

-/-: No read/write access

Device name	Device type				
	Bit	Byte (8 bits)	Word (16 bits)	Double-word (32 bits)	Quad-word (64 bits)
I*1	R/W	-/-	-/-	-/-	-/-
Q*1	R/W	-/-	-/-	-/-	-/-
V*1	R/W	-/-	-/-	-/-	-/-
M*1	R/W	-/-	-/-	-/-	-/-
S*1	R/W	-/-	-/-	-/-	-/-
T	R/-	-/-	-/-	-/-	-/-
C	R/-	-/-	-/-	-/-	-/-
SM*1	R/W	-/-	-/-	-/-	-/-

*1 To use the device as word data, use the word device that has the same device name appended with "W".
Example) Use IW for I.

Monitoring-supported byte devices ([SIEMENS OP(Ethernet)])

The following table shows monitoring-supported byte devices.

To check whether writing/reading data to/from each device is available, refer to the following.

☞ Page 655 Availability of writing/reading data to/from byte devices ([SIEMENS OP(Ethernet)])

For the formats of devices, refer to the following.

📖GT Designer3 (GOT2000) Screen Design Manual

○: Available

×: Not available

Device name		Device No. representation	Setting range	Specifications of EG devices*1	
				Assignment to EG devices	Access using a client
IB	Input relay	Decimal	0 to 65535	×	×
QB	Output relay	Decimal	0 to 65535	×	×
MB	Bit memory	Decimal	0 to 65535	×	×

*1 For the devices assigned to EG devices (gateway devices) and the compatible clients, refer to the following.
📖GT Designer3 (GOT2000) Screen Design Manual

Availability of writing/reading data to/from byte devices ([SIEMENS OP(Ethernet)])

The following shows whether writing/reading data to/from byte devices is available by device type.

R/W: Both read and write

R/-: Read only

-/W: Write only

-/-: No read/write access

Device name	Device type				
	Byte (8 bits)	Word (16 bits)	Double-word (32 bits)	Quad-word (64 bits)	Bit of byte data
IB	R/W	-/-	-/-	-/-	-/-
QB	R/W	-/-	-/-	-/-	-/-
MB	R/W	-/-	-/-	-/-	-/-

Monitoring-supported word devices ([SIEMENS OP(Ethernet)])

The following table shows monitoring-supported word devices.

To check whether writing/reading data to/from each device is available, refer to the following.

☞ Page 657 Availability of writing/reading data to/from word devices ([SIEMENS OP(Ethernet)])

For the formats of devices, refer to the following.

GT Designer3 (GOT2000) Screen Design Manual

○: Available

×: Not available

Device name		Device No. representation	Setting range	Specifications of EG devices*1	
				Assignment to EG devices	Access using a client
T*2	Timer	Decimal	0 to 65535	○	○ (Not usable as bit data)
C	Counter	Decimal	0 to 65535	○	○ (Not usable as bit data)
DB*3*4	Data register	Decimal	DB(Data block No.).DBW(Device) Notation example: DB65535.DBW0 • Data block No. (decimal): 1 to 65535 • Device (Data word No.) (decimal): 0 to 65534 (Set an even number.)	○	○
VW*5	Variable memory	Decimal	0 to 20478	○	○ (Not usable as bit data)
IW*5	Input relay	Decimal	0 to 65534	○	○ (Not usable as bit data)
QW*5*6	Output relay	Decimal	0 to 65534	○	○ (Not usable as bit data)
MW*5	Bit memory	Decimal	0 to 65534	○	○ (Not usable as bit data)
AIW*5	Analog input	Decimal	0 to 110	○	×
AQW*5*6	Analog output	Decimal	0 to 110	○	○ (Not usable as bit data)
SMW*5	Special memory	Decimal	0 to 2046	○	○ (Not usable as bit data)
SW*5	Sequence control relay	Decimal	0 to 30	○	○ (Not usable as bit data)

*1 For the devices assigned to EG devices (gateway devices) and the compatible clients, refer to the following.
GT Designer3 (GOT2000) Screen Design Manual

*2 Only one device can be set as the write destination.
Do not set this device as the write destination for a function to write data to consecutive devices such as the recipe function.

*3 It is necessary to define the data block using a peripheral software or sequence program, before using this device.

*4 Continuous access across data blocks is not possible.

*5 When the device type is the word (16 bits) type, set an even number for the device number.
When the device type is the double-word (32 bits) type, set the device number in multiples of 4.

*6 Writing is possible only while the programmable controller is running.

Availability of writing/reading data to/from word devices ([SIEMENS OP(Ethernet)])

The following shows whether writing/reading data to/from word devices is available by device type.

R/W: Both read and write

R/-: Read only

-/W: Write only

-/-: No read/write access

Device name	Device type			
	Word (16 bits)	Double-word (32 bits)	Quad-word (64 bits)	Bit of word data
T	R/W	R/W	-/-	-/-
C	R/W	R/W	-/-	-/-
DB	R/W	R/W	-/-	R/W
VW*1	R/W	R/W	-/-	-/-
IW*1	R/W	R/W	-/-	-/-
QW*1	R/W	R/W	-/-	-/-
MW*1	R/W	R/W	-/-	-/-
AIW	R/-	R/-	-/-	-/-
AQW	R/W	R/W	-/-	-/-
SMW*1	R/W	R/W	-/-	-/-
SW*1	R/W	R/W	-/-	-/-

*1 To use the device as bit data, use the bit device that has the same device name without "W".
Example) Use I for IW.

A

Monitoring-supported double-word devices ([SIEMENS OP(Ethernet)])

The following table shows monitoring-supported double-word devices.

To check whether writing/reading data to/from each device is available, refer to the following.

☞ Page 658 Availability of writing/reading data to/from double-word devices ([SIEMENS OP(Ethernet)])

For the formats of devices, refer to the following.

GT Designer3 (GOT2000) Screen Design Manual

○: Available

×: Not available

Device name		Device No. representation	Setting range	Specifications of EG devices*1	
				Assignment to EG devices	Access using a client
ID	Input relay	Decimal	0 to 65532 (Set the number in multiples of 4.)	×	×
QD	Output relay	Decimal	0 to 65532 (Set the number in multiples of 4.)	×	×
MD	Bit memory	Decimal	0 to 65532 (Set the number in multiples of 4.)	×	×
DB*2*3	Data register	Decimal	DB(Data block No.).DBD(Device) Notation example: DB4095.DBD0 • Data block No. (decimal): 1 to 4095 • Device (Data word No.) (decimal): 0 to 65532 (Set the number in multiples of 4.)	○	○
HC	High-speed counter	Decimal	0 to 3	×	×

*1 For the devices assigned to EG devices (gateway devices) and the compatible clients, refer to the following.
GT Designer3 (GOT2000) Screen Design Manual

*2 It is necessary to define the data block using a peripheral software or sequence program, before using this device.

*3 Continuous access across data blocks is not possible.

Availability of writing/reading data to/from double-word devices ([SIEMENS OP(Ethernet)])

The following shows whether writing/reading data to/from double-word devices is available by device type.

R/W: Both read and write

R/-: Read only

-/W: Write only

-/-: No read/write access

Device name	Device type			
	Word (16 bits)	Double-word (32 bits)	Quad-word (64 bits)	Bit of double-word data
ID	-/-	R/W	-/-	-/-
QD	-/-	R/W	-/-	-/-
MD	-/-	R/W	-/-	-/-
DB	R/W	R/W	-/-	-/-
HC	-/-	R/-	-/-	-/-

Offset specifications ([SIEMENS OP(Ethernet)])

The following shows the offset specifications of each device when using the offset function.

For the notation and range of devices, refer to the following.

☞ Page 654 Monitoring-supported bit devices ([SIEMENS OP(Ethernet)])
☞ Page 655 Monitoring-supported byte devices ([SIEMENS OP(Ethernet)])
☞ Page 656 Monitoring-supported word devices ([SIEMENS OP(Ethernet)])
☞ Page 658 Monitoring-supported double-word devices ([SIEMENS OP(Ethernet)])

<table>
<tr><th colspan="2" rowspan="2">Device</th><th colspan="2">Offset specifications</th></tr>
<tr><th>GT27, GT25, GT23, and SoftGOT2000</th><th>GT21 and GS21</th></tr>
<tr><td rowspan="7">Bit device</td><td>I</td><td colspan="2" rowspan="6">When the bit address is increased by 8 bits, the byte address is increased by 1 byte.
Example) Offset for I000000
When offset value is 10, I000012 is monitored.</td></tr>
<tr><td>Q</td></tr>
<tr><td>V</td></tr>
<tr><td>M</td></tr>
<tr><td>S</td></tr>
<tr><td>SM</td></tr>
<tr><td rowspan="2">T
C</td><td colspan="2" rowspan="2">Example) Offset for T0
When offset value is 10, T10 is monitored.</td></tr>
<tr><td rowspan="3">Byte device</td></tr>
<tr><td>IB</td><td colspan="2" rowspan="3">Example) Offset for IB0
When offset value is 10, IB10 is monitored.</td></tr>
<tr><td>QB</td></tr>
<tr><td>MB</td></tr>
<tr><td rowspan="4">Word device</td><td>T
C</td><td colspan="2">Example) Offset for T0
When offset value is 10, T10 is monitored.</td></tr>
<tr><td rowspan="2">DB</td><td colspan="2">The offset target is device number (data word number).
When a bit is specified, the bit is not supported for the bit number offset.</td></tr>
<tr><td>The offset value is specified as offset regardless of the data type.
Example) Offset for DB1.DBW0
When offset value is 10, DB1.DBW10 is monitored.</td><td>The offset value is changed and the value is specified for offset according to the data type.
Example) Offset for DB1.DBW0
When offset value is 10, DB1.DBW20 is monitored.</td></tr>
<tr><td>VW
IW
QW
MW
AIW
AQW
SMW
SW</td><td>The offset value is specified as offset regardless of the data type.
Example) Offset for VW0
When offset value is 10, VW10 is monitored.</td><td>The offset value is changed and the value is specified for offset according to the data type.
Example) Offset for VW0
When offset value is 10, VW20 are monitored.</td></tr>
<tr><td rowspan="4">Double-word device</td><td>ID
QD
MD</td><td>The offset value is specified as offset regardless of the data type.
Example) Offset for ID0
When offset value is 10, DB1.DBW10 is monitored.</td><td>The offset value is changed and the value is specified for offset according to the data type.
Example) Offset for ID0
When offset value is 10, ID40 is monitored.</td></tr>
<tr><td rowspan="2">DB</td><td colspan="2">The offset target is device number (data word number).</td></tr>
<tr><td>The offset value is specified as offset regardless of the data type.
Example) Offset for DB1.DBD0
When offset value is 10, DB1.DBD10 is monitored.</td><td>The offset value is changed and the value is specified for offset according to the data type.
Example) Offset for DB1.DBD0
When offset value is 10, DB1.DBD20 is monitored.</td></tr>
<tr><td>HC</td><td colspan="2">Example) Offset for HC0
When offset value is 1, HC1 is monitored.</td></tr>
</table>

A

MEMO

REVISIONS

* The manual number is given on the bottom left of the back cover.

Revision date	* Manual Number	Revision
Sep. 2013	SH(NA)-081199ENG-A	Compatible with GT Works3 Version1.100E
Nov. 2013	SH(NA)-081199ENG-B	Compatible with GT Works3 Version1.104J • Changing the icons of the supported models
Jan. 2014	SH(NA)-081199ENG-C	Compatible with GT Works3 Version1.108N • Writing errors have been corrected.
Apr. 2014	SH(NA)-081199ENG-D	Compatible with GT Works3 Version1.112S • GT25 and GS21 have been added. • The ALLEN-BRADLEY PLC MicroLogix1400 is supported.
Jul. 2014	SH(NA)-081199ENG-E	Compatible with GT Works3 Version1.118Y • SICK safety controller connection of GS21 is supported. • SICK safety controller FX3-CPU320002 is supported. • ALLEN-BRADLEY PLC Ethernet connection type: Ethernet (AB Tag) is supported. • SIEMENS PLC SIMATIC S7-300/400 series connection of GS21 is supported.
Oct. 2014	SH(NA)-081199ENG-F	Compatible with GT Works3 Version1.122C • GT21 is added. • PLCs manufactured by MITSUBISHI INDIA are supported. • The multi CPU of PLCs manufactured by Yokogawa Electric Corporation is supported. • The IP filter setting is supported.
Jan. 2015	SH(NA)-081199ENG-G	Compatible with GT Works3 Version1.126G • YASKAWA PLC connection of GT21 is supported.
Apr. 2015	SH(NA)-081199ENG-H	Compatible with GT Works3 Version1.130L • FUJI PLC (MICREX-SX SPH) is supported. • LS INDUSTRIAL SYSTEMS PLC connection of GT21 is supported. • ALLEN-BRADLEY PLC connection (Serial only) of GT21 is supported. • ALLEN-BRADLEY PLC connection multi-CPU (Ethernet (AB Tag)) is supported. • GT27 is added (GT2705-VTBD). • GT21 is added (GT2104-RTBD, GT2103-PMBDS2, GT2103-PMBLS).
Jun. 2015	SH(NA)-081199ENG-I	Compatible with GT Works3 Version1.134Q • SIEMENS PLC Ethernet connection of GT21 is supported.
Oct. 2015	SH(NA)-081199ENG-J	Compatible with GT Works3 Version1.144A • GT21 is added (GT2104-PMBD, GT2104-PMBDS). • YASKAWA PLC MP3000 series is supported.
Dec. 2015	SH(NA)-081199ENG-K	Compatible with GT Works3 Version1.150G • Station blocking function compatible Ethernet connection • Station monitoring function of the following connection CC-Link IE controller network connection CC-Link IE Field Network connection • The PC link module F3LC11-2F of PLCs manufactured by Yokogawa Electric Corporation is supported.
May 2016	SH(NA)-081199ENG-L	Compatible with GT Works3 Version1.155M • GT21 is added (GT2105-QTBDS, GT2105-QMBDS, GT2104-PMBDS2, GT2104-PMBLS). • GT21 of connection type ALLEN-BRADLEY PLC Ethernet connection type: Ethernet (AB) is supported.
Aug. 2016	SH(NA)-081199ENG-M	Compatible with GT Works3 Version1.160S • GT21 is added FUJI PLC (MICREX-SX series only). • GOT2000 series Ethernet communication unit is supported.
Oct. 2016	SH(NA)-081199ENG-N	Compatible with GT Works3 Version1.165X • RKC Temperature controller (FZ/RZ series) is supported.
Jan. 2017	SH(NA)-081199ENG-O	Compatible with GT Works3 Version1.170C • GT2107-W is added (GT2107-WTBD, GT2107-WTSD).
Apr. 2017	SH(NA)-081199ENG-P	Compatible with GT Works3 Version1.175H • GT25 is added (GT25-W). • Hirata Corporation HNC controller connection is supported.
Jun. 2017	SH(NA)-081199ENG-Q	Compatible with GT Works3 Version1.180N • GT25 is added (GT2505-V). • For Ethernet connection, the default value of the GOT station No. is changed to [18].
Oct. 2017	SH(NA)-081199ENG-R	Compatible with GT Works3 Version1.185T • FUJI Temperature controller (PXF4, PXF5, PXF9, PUMA, PUMB) is supported. • YOKOGAWA Temperature controller (UP32A) is supported. • MURATEC controller connection is supported.

Revision date	* Manual Number	Revision
Dec. 2017	SH(NA)-081199ENG-S	Compatible with GT Works3 Version 1.190Y • Compatible with avoiding overlapping of [GOT Communication Port No.]
Apr. 2018	SH(NA)-081199ENG-T	Compatible with GT Works3 Version1.195D • The following devices of MicroLogix series, ALLEN-BRADLEY PLC are supported. I, O, F device • The following model of SIEMENS PLC is additionally supported. (only GT21) SIEMENS S7-200 CN/SMART • RKC temperature controller (SR-J series) are additionally supported.
Jul. 2018	SH(NA)-081199ENG-U	Compatible with GT Works3 Version1.200J • ALLEN-BRADLEY PLC Ethernet connection (Ethernet (AB MicroLogix)) is supported.
Oct. 2018	SH(NA)-081199ENG-V	Compatible with GT Works3 Version1.205P • Abbreviations, generic terms, and icon indications have been changed.
Jan. 2019	SH(NA)-081199ENG-W	Compatible with GT Works3 Version1.210U • GT2505-V supports the following connection using the RS-232/485 signal conversion adapter (GT14-RS2T4-9P). Connection to FUJI Temperature controller Connection to YOKOGAWA Temperature controller Connection to RKC Temperature controller
Apr. 2019	SH(NA)-081199ENG-X	Compatible with GT Works3 Version1.215Z • Some corrections
Jul. 2019	SH(NA)-081199ENG-Y	Some corrections
Oct. 2019	SH(NA)-081199ENG-Z	Some corrections
Jan. 2020	SH(NA)-081199ENG-AA	Some corrections
Apr. 2020	SH(NA)-081199ENG-AB	Some corrections
Jun. 2020	SH(NA)-081199ENG-AC	Compatible with GT Works3 Version1.240A • The company name of TOSHIBA MACHINE CO., LTD. has been changed to SHIBAURA MACHINE CO., LTD. • RKC temperature controller (PZ/GZ series) are additionally supported.
Oct. 2020	SH(NA)-081199ENG-AD	Compatible with GT Works3 Version1.245F • HITACHI PLC S10VE is supported.
Jan. 2021	SH(NA)-081199ENG-AE	Compatible with GT Works3 Version1.250L • GT25 is added (GT2512-WXTBD, GT2512-WXTSD). • GS21 is added (GS2110-WTBD-N, GS2107-WTBD-N).
Apr. 2021	SH(NA)-081199ENG-AF	Compatible with GT Works3 Version1.255R • HITACHI IES PLC and HITACHI IES EHV series are supported. • SIEMENS PLC SIMATIC S7-200 SMART series is available to GT27, GT25, and GT23. • SIEMENS PLC SIMATIC S7-1500 series is supported. • The 8-bit and 64-bit tag communication for ALLEN-BRADLEY PLC AB Control/CompactLogix(Tag) connection is supported. • The model name and communication driver name for connection to HITACHI IES PLC have been changed.
Jul. 2021	SH(NA)-081199ENG-AG	Compatible with GT Works3 Version1.260W • Extending the following device range in HITACHI IES HIDIC H series is supported. TD, CU, SS, WDT, MS, TMR, RCU, CT, TC, WR • Changed the name of the direct CPU connection to the direct CPU connection (serial).
Oct. 2021	SH(NA)-081199ENG-AH	Compatible with GT Works3 Version1.265B • Connection to YASKAWA robot controller YRC1000 is supported. • Connection to LS IS PLC XGT series is supported.
Jan. 2022	SH(NA)-081199ENG-AI	Some corrections
Apr. 2022	SH(NA)-081199ENG-AJ	Some corrections
Jul. 2022	SH(NA)-081199ENG-AK	Compatible with GT Works3 Version1.280S • Connection to YASKAWA robot controller YRC1000micro is supported.
Jan. 2023	SH(NA)-081199ENG-AL	Compatible with GT Works3 Version1.290C • The name of the communication driver for Ethernet connection to ALLEN-BRADLEY PLC has been changed.
Apr. 2023	SH(NA)-081199ENG-AM	Some corrections

This manual confers no industrial property rights or any rights of any other kind, nor does it confer any patent licenses.
Mitsubishi Electric Corporation cannot be held responsible for any problems involving industrial property rights which may occur as a result of using the contents noted in this manual.

©2013 MITSUBISHI ELECTRIC CORPORATION

WARRANTY

Please check the following product warranty details before using this product.

■1. Gratis Warranty Term and Gratis Warranty Range

If any faults or defects (hereinafter "Failure") found to be the responsibility of Mitsubishi occurs during use of the product within the gratis warranty term, the product shall be repaired at no cost via the sales representative or Mitsubishi Service Company.
However, if repairs are required onsite at domestic or overseas location, expenses to send an engineer will be solely at the customer's discretion.
Mitsubishi shall not be held responsible for any re-commissioning, maintenance, or testing on-site that involves replacement of the failed module.

(1) Gratis Warranty Term

The gratis warranty term of the product shall be for thirty-six (36) months after the date of purchase or delivery to a designated place.
Note that after manufacture and shipment from Mitsubishi, the maximum distribution period shall be six (6) months, and the longest gratis warranty term after manufacturing shall be forty-two (42) months.
The gratis warranty term of repair parts shall not exceed the gratis warranty term before repairs.

(2) Gratis Warranty Range

(a) The customer shall be responsible for the primary failure diagnosis unless otherwise specified.
If requested by the customer, Mitsubishi Electric Corporation or its representative firm may carry out the primary failure diagnosis at the customer's expense.
The primary failure diagnosis will, however, be free of charge should the cause of failure be attributable to Mitsubishi Electric Corporation.

(b) The range shall be limited to normal use within the usage state, usage methods, and usage environment, etc., which follow the conditions and precautions, etc., given in the instruction manual, user's manual and caution labels on the product.

(c) Even within the gratis warranty term, repairs shall be charged in the following cases.
- Failure occurring from inappropriate storage or handling, carelessness or negligence by the user. Failure caused by the user's hardware or software design.
- Failure caused by unapproved modifications, etc., to the product by the user.
- When the Mitsubishi product is assembled into a user's device, Failure that could have been avoided if functions or structures, judged as necessary in the legal safety measures the user's device is subject to or as necessary by industry standards, had been provided.
- Failure that could have been avoided if consumable parts designated in the instruction manual had been correctly serviced or replaced.
- Replacing consumable parts such as a battery, backlight, and fuse.
- Failure caused by external irresistible forces such as fires or abnormal voltages, and Failure caused by force majeure such as earthquakes, lightning, wind and water damage.
- Failure caused by reasons that could not be predicted by scientific technology standards at the time of shipment from Mitsubishi.
- Any other failure found not to be the responsibility of Mitsubishi or that admitted not to be so by the user.

■2. Onerous repair term after discontinuation of production

(1) Mitsubishi shall accept onerous product repairs for seven (7) years after production of the product is discontinued.
Discontinuation of production shall be notified with Mitsubishi Technical Bulletins, etc.

(2) Mitsubishi shall not accept a request for product supply (including spare parts) after production is discontinued.

■3. Overseas service

Overseas, repairs shall be accepted by Mitsubishi's local overseas FA Center.
Note that the repair conditions at each FA Center may differ.

■4. Exclusion of loss in opportunity and secondary loss from warranty liability

Regardless of the gratis warranty term, Mitsubishi shall not be liable for compensation to:

(1) Damages caused by any cause found not to be the responsibility of Mitsubishi.

(2) Loss in opportunity, lost profits incurred to the user by Failures of Mitsubishi products.

(3) Special damages and secondary damages whether foreseeable or not, compensation for accidents, and compensation for damages to products other than Mitsubishi products.

(4) Replacement by the user, maintenance of on-site equipment, start-up test run and other tasks.

■5. Changes in product specifications

The specifications given in the catalogs, manuals, or technical documents are subject to change without prior notice.

■6. Product application

(1) In using the Mitsubishi graphic operation terminal, the usage conditions shall be that the application will not lead to a major accident even if any problem or fault should occur in the graphic operation terminal device, and that backup and fail-safe functions are systematically provided outside of the device for any problem or fault.

(2) The Mitsubishi graphic operation terminal has been designed and manufactured for applications in general industries, etc.
Thus, applications in which the public could be affected such as in nuclear power plants and other power plants operated by respective power companies, and applications in which a special quality assurance system is required, such as for Railway companies or Public service shall be excluded from the graphic operation terminal applications.
In addition, applications in which human life or property could be greatly affected, such as in aircraft, medical, railway applications, incineration and fuel devices, manned transportation equipment, recreation and amusement devices, safety devices, shall also be excluded from the graphic operation terminal.
Even for the above applications, however, Mitsubishi Electric Corporation may consider the possibility of an application, provided that the customer notifies Mitsubishi Electric Corporation of the intention, the application is clearly defined and any special quality is not required, after the user consults the local Mitsubishi representative.

Intellectual Property Rights

■Trademarks

MELDAS, MELSEC, iQ Platform, MELSOFT, GOT, CC-Link, CC-Link/LT, and CC-Link IE are trademarks or registered trademarks of Mitsubishi Electric Corporation in Japan and other countries.

Microsoft, Microsoft Access, Excel, SQL Server, Visual Basic, Visual C++, Visual C#, Windows, Windows NT, Windows Server, and Windows Vista are trademarks of the Microsoft group of companies.

MODBUS is a trademark of Schneider Electric SA.

DeviceNet is a trademark of ODVA (Open DeviceNet Vendor Association, Inc.).

VNC is a registered trademark of RealVNC Ltd. in the United States and other countries.

Unicode is a trademark or registered trademark of Unicode, Inc. in the United States and other countries.

PictBridge is a registered trademark of Canon Inc.

Adobe and Adobe Reader are registered trademarks of Adobe Systems Incorporated.

Oracle and JavaScript are registered trademarks of Oracle Corporation and/or its affiliates in the United States and other countries.

QR Code is a trademark or registered trademark of DENSO WAVE INCORPORATED in Japan, the United States, and/or other countries.

Anybus is a registered trademark of HMS Industrial Networks AB.

Android and Google Chrome are trademarks or registered trademarks of Google Inc.

IOS is a trademark or registered trademark of Cisco in the U.S. and other countries and is used under license.

Safari and iPhone are trademarks of Apple Inc. registered in the United States and other countries. The iPhone trademark is used under license from AIPHONE CO., LTD.

Intel and Intel Core are trademarks or registered trademarks of Intel Corporation in the United States and other countries.

Other company and product names herein are trademarks or registered trademarks of their respective owners.

■Copyrights

The screens (screenshots) are used in accordance with the Microsoft Corporation guideline.

SH(NA)-081199ENG-AM(2304)MEE
MODEL: GOT2000-CON3-SW1-E
MODEL CODE: -

MITSUBISHI ELECTRIC CORPORATION

HEAD OFFICE: TOKYO BLDG., 2-7-3, MARUNOUCHI, CHIYODA-KU, TOKYO 100-8310, JAPAN
NAGOYA WORKS: 1-14, YADA-MINAMI 5-CHOME, HIGASHI-KU, NAGOYA 461-8670, JAPAN

When exported from Japan, this manual does not require application to the Ministry of Economy, Trade and Industry for service transaction permission.

Specifications subject to change without notice.