MITSUBISHI
ELECTRIC

Programmable Controller

MELSEC iQ-R series

MELSEC iQ-R Analog-Digital Converter Module/ Digital-Analog Converter Module Function Block Reference

CONTENTS

CHAPTER 1 FUNCTION BLOCK (FB) LIST 2

CHAPTER 2 ANALOG-DIGITAL CONVERTER MODULE FB 4

2.1 M+Model_RequestSetting. 4
2.2 M+Model_OperateError. 6
2.3 M+Model_SetLoggingParam 9
2.4 M+Model_SaveLogging 15
2.5 M+Model_SetContinuousLoggingParam 20
2.6 M+Model_ContinuousLoggingRequest. 23
2.7 M+Model_ReadContinuousLogging 26
2.8 M+Model_SetHighSpeedContinuousLoggingParam 29
2.9 M+Model_HighSpeedContinuousLoggingRequest 32
2.10 M+Model_ReadHighSpeedContinuousLogging 35
2.11 M+Model_SetHighSpeedLoggingParam 39
2.12 M+Model_SaveHighSpeedLogging 42
2.13 M+Model_RefreshHARTDeviceInfo 46
2.14 M+Model_HARTCommandRequest 49

CHAPTER 3 DIGITAL-ANALOG CONVERTER MODULE FB 53

3.1 M+Model_RequestSetting. 53
3.2 M+Model_OperateError. 55
3.3 M+Model_WaveOutputSetting 57
3.4 M+Model_WaveDataStoreCsv 61
3.5 M+Model_WaveDataStoreDev 66
3.6 M+Model_WaveOutputReqSetting 69

APPENDICES 73

Appendix 1 CSV File Output Format of the FB for Saving Logging Data 73
Appendix 2 Storage Source "Parameter/Data of Waveform Output Function" and Storage Destination Buffer Memory 76
Appendix 3 CSV File Format of the FB for Reading Wave Data (CSV File). 79

INSTRUCTION INDEX 81

REVISIONS. 83
TRADEMARKS 84

1 FUNCTION BLOCK (FB) LIST

This FB list is intended for those who use the MELSEC iQ-R series analog-digital converter module and digital-analog converter module.

Analog-digital converter module FB

■R60AD4, R60ADV8, R60ADI8

Name[1]	Description
M+R60AD_RequestSetting	Enables the settings of each function.
M+R60AD_OperateError	Monitors error codes and resets errors.
M+R60AD_SetLoggingParam	Sets up the logging function of a specified channel.
M+R60AD_SaveLogging	Saves the logging data of a specified channel into a file.

[1] An FB name ends in the FB version information such as "_00A"; however, this reference manual leaves out it.

■R60AD8-G, R60AD16-G

Name[1]	Description
M+R60ADG_RequestSetting	Enables the settings of each function.
M+R60ADG_OperateError	Monitors error codes and resets errors.
M+R60ADG_SetLoggingParam	Sets up the logging function of a specified channel.
M+R60ADG_SaveLogging	Saves the logging data of a specified channel into a file.

[1] An FB name ends in the FB version information such as "_00A"; however, this reference manual leaves out it.

■R60ADH4

Name[1]	Description
M+R60ADH_RequestSetting	Enables the settings of each function.
M+R60ADH_OperateError	Monitors error codes and resets errors.
M+R60ADH_SetLoggingParam	Sets up the normal logging function of a specified channel.
M+R60ADH_SaveLogging	Saves the logging data of a specified channel collected by the normal logging function into a file.
M+R60ADH_SetContinuousLoggingParam	Sets the parameters of the continuous logging function.
M+R60ADH_ContinuousLoggingRequest	Starts/stops the continuous logging.
M+R60ADH_ReadContinuousLogging	Reads out the logging data collected by the continuous logging function and stores the data in a specified file register.
M+R60ADH_SetHighSpeedContinuousLoggingParam	Sets the parameters of the high speed continuous logging function.
M+R60ADH_HighSpeedContinuousLoggingRequest	Starts/stops the high speed continuous logging.
M+R60ADH_ReadHighSpeedContinuousLogging	Reads out the logging data collected by the high speed continuous logging function and stores the data in a specified file register.
M+R60ADH_SetHighSpeedLoggingParam	Sets up the high speed logging function of a specified channel.
M+R60ADH_SaveHighSpeedLogging	Reads out the logging data collected by the high speed logging function and stores the data in a file.

[1] An FB name ends in the FB version information such as "_00A"; however, this reference manual leaves out it.

Point

The R60ADH4 has the normal logging function that is equivalent to the logging function of other A/D converter modules as well as the high speed logging function, the continuous logging function, and the high speed continuous logging function. When using the R60ADH4, regard the logging function in the subsequent descriptions as the normal logging function.

■R60ADI8-HA

Name[*1]	Description
M+R60ADHART_RequestSetting	Enables the settings of each function.
M+R60ADHART_OperateError	Monitors error codes and resets errors.
M+R60ADHART_RefreshHARTDeviceInfo	Refreshes HART device information.
M+R60ADHART_HARTCommandRequest	Sends HART command request data to a HART-enabled device and receives HART command answer data from the HART-enabled device.

[*1] An FB name ends in the FB version information such as "_00A"; however, this reference manual leaves out it.

■R60AD6-DG

Name[*1]	Description
M+R60ADDG_RequestSetting	Enables the settings of each function.
M+R60ADDG_OperateError	Monitors error codes and resets errors.
M+R60ADDG_SetLoggingParam	Sets up the logging function of a specified channel.
M+R60ADDG_SaveLogging	Saves the logging data of a specified channel into a file.

[*1] An FB name ends in the FB version information such as "_00A"; however, this reference manual leaves out it.

Digital-analog converter module FB

■R60DA4, R60DAV8, R60DAI8

Name[*1]	Description
M+R60DA_RequestSetting	Enables the settings of each function.
M+R60DA_OperateError	Monitors error codes and resets errors.
M+R60DA_WaveOutputSetting	Sets the wave output of a specified channel or all channels.
M+R60DA_WaveDataStoreCsv	Reads out data from the CSV file that holds the parameters and the wave data (number of wave data points and wave data) of the wave output function, and writes the data to the buffer memory of the digital-analog converter module.
M+R60DA_WaveDataStoreDev	Reads out data from the file register (ZR) that holds the parameters and the wave data (number of wave data points and wave data) of the wave output function, and writes the data to the buffer memory of the digital-analog converter module.
M+R60DA_WaveOutputReqSetting	Specifies whether to start, stop, or pause the wave output of a specified channel or all channels.

[*1] An FB name ends in the FB version information such as "_00A"; however, this reference manual leaves out it.

■R60DA8-G

Name[*1]	Description
M+R60DAG_RequestSetting	Enables the settings of each function.
M+R60DAG_OperateError	Monitors error codes and resets errors.

[*1] An FB name ends in the FB version information such as "_00A"; however, this reference manual leaves out it.

■R60DA16-G

Name[*1]	Description
M+R60DAG16_RequestSetting	Enables the settings of each function.
M+R60DAG16_OperateError	Monitors error codes and resets errors.

[*1] An FB name ends in the FB version information such as "_00A"; however, this reference manual leaves out it.

■R60DAH4

Name[*1]	Description
M+R60DAH_RequestSetting	Enables the settings of each function.
M+R60DAH_OperateError	Monitors error codes and resets errors.
M+R60DAH_WaveOutputSetting	Sets the wave output of a specified channel or all channels.
M+R60DAH_WaveDataStoreCsv	Reads out data from the CSV file that holds the parameters and the wave data (number of wave data points and wave data) of the wave output function, and writes the data to the buffer memory of the digital-analog converter module.
M+R60DAH_WaveDataStoreDev	Reads out data from the file register (ZR) that holds the parameters and the wave data (number of wave data points and wave data) of the wave output function, and writes the data to the buffer memory of the digital-analog converter module.
M+R60DAH_WaveOutputReqSetting	Specifies whether to start, stop, or pause the wave output of a specified channel or all channels.

[*1] An FB name ends in the FB version information such as "_00A"; however, this reference manual leaves out it.

2 ANALOG-DIGITAL CONVERTER MODULE FB

2.1 M+Model_RequestSetting

Name

The module names of the FB are based on the module used and are as follows.

■R60AD4, R60ADV8, R60ADI8

M+R60AD_RequestSetting

■R60AD8-G, R60AD16-G

M+R60ADG_RequestSetting

■R60ADH4

M+R60ADH_RequestSetting

■R60ADI8-HA

M+R60ADHART_RequestSetting

■R60AD6-DG

M+R60ADDG_RequestSetting

Overview

Item	Description
Functional overview	Enables the settings of each function.
Symbol	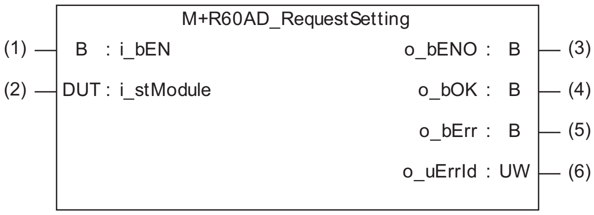 M+R60AD_RequestSetting (1) B : i_bEN (2) DUT : i_stModule o_bENO : B (3) o_bOK : B (4) o_bErr : B (5) o_uErrId : UW (6)

Labels to use

■Input labels

No.	Variable name	Name	Data type	Scope	Description
(1)	i_bEN	Execution command	Bit	On or off	On: The FB is activated. Off: The FB is not activated.
(2)	i_stModule	Module label	Structure	The scope differs depending on the module label.	Specifies a module label of the analog-digital converter module.

■Output labels

No.	Variable name	Name	Data type	Default value	Description
(3)	o_bENO	Execution status	Bit	Off	On: The execution command is on. Off: The execution command is off.
(4)	o_bOK	Normal completion	Bit	Off	The on state indicates that the operation to enable each setting is complete.
(5)	o_bErr	Error completion	Bit	Off	Always off
(6)	o_uErrId	Error code	Word [unsigned]	0	Always 0

FB details

Item	Description	
Relevant devices	Relevant modules	R60AD4, R60ADV8, R60ADI8, R60AD8-G, R60AD16-G, R60ADH4, R60ADI8-HA, R60AD6-DG
	Relevant CPU modules	MELSEC iQ-R series CPU modules
	Relevant engineering tool	GX Works3
Language to use	Ladder diagram	
Number of basic steps	■R60AD4, R60ADV8, R60ADI8, R60AD8-G, R60AD16-G, R60ADI8-HA, R60AD6-DG 25 steps ■R60ADH4 34 steps The number of steps of the FB embedded in a program depends on the CPU module used, the input/output definitions, and the options setting of GX Works3. For the options setting of GX Works3, refer to the GX Works3 Operating Manual.	
Functional description	• Turning on i_bEN (execution command) allows the settings of all channels to be enabled. For what settings are enabled, refer to the user's manual (Application) of the analog-digital converter module used. • This FB continues its execution until the completion of the settings of each function after i_bEN (execution command) turns on.	
FB compilation method	Macro type	
FB operation	Pulse execution type (multiple scan execution type)	
Timing chart of I/O signals	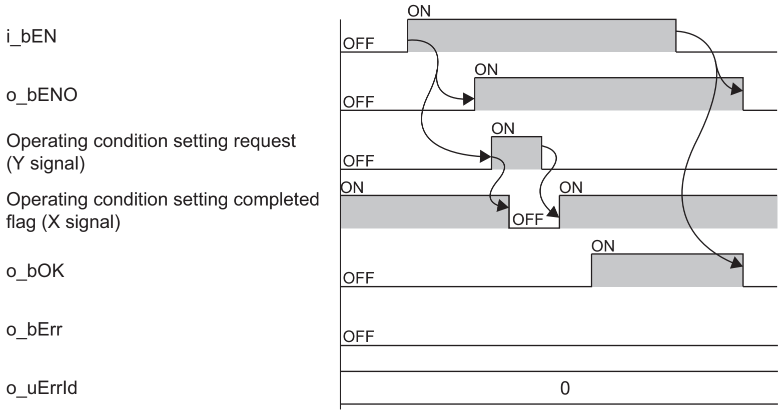 i_bEN o_bENO Operating condition setting request (Y signal) Operating condition setting completed flag (X signal) o_bOK o_bErr o_uErrId ON OFF 0	
Restrictions and precautions	• This FB does not include the error recovery processing. Prepare the error recovery processing separately to suit the user's system and the expected operation. • The FB cannot be used in an interrupt program. • As this FB is executed, the A/D conversion processing stops, and thereafter when o_bOK (normal completion) turns on, the conversion processing resumes. • Putting an analog-digital converter module into operation requires the input range to be set according to the connected devices and the system in use. Set up the module parameters of GX Works3 according to the application. For how to set up the module parameters, refer to the user's manual (Application) of the analog-digital converter module used.	

Error code

Error code	Description	Action
None	None	None

2.2 M+Model_OperateError

Name

The module names of the FB are based on the module used and are as follows.

■R60AD4, R60ADV8, R60ADI8

M+R60AD_OperateError

■R60AD8-G, R60AD16-G

M+R60ADG_OperateError

■R60ADH4

M+R60ADH_OperateError

■R60ADI8-HA

M+R60ADHART_OperateError

■R60AD6-DG

M+R60ADDG_OperateError

Overview

Item	Description
Functional overview	Monitors error codes and resets errors.
Symbol	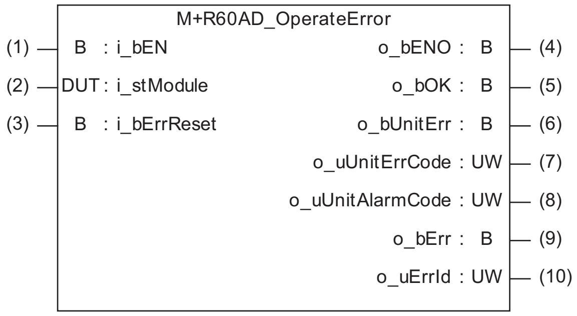

M+R60AD_OperateError
(1) B : i_bEN
(2) DUT : i_stModule
(3) B : i_bErrReset
o_bENO : B (4)
o_bOK : B (5)
o_bUnitErr : B (6)
o_uUnitErrCode : UW (7)
o_uUnitAlarmCode : UW (8)
o_bErr : B (9)
o_uErrId : UW (10)

Labels to use

■Input labels

No.	Variable name	Name	Data type	Scope	Description
(1)	i_bEN	Execution command	Bit	On or off	On: The FB is activated. Off: The FB is not activated.
(2)	i_stModule	Module label	Structure	The scope differs depending on the module label.	Specifies a module label of the analog-digital converter module.
(3)	i_bErrReset	Error reset request	Bit	On or off	Turn on this label to reset errors. After completion of the error reset, turn off the label.

■Output labels

No.	Variable name	Name	Data type	Default value	Description
(4)	o_bENO	Execution status	Bit	Off	On: The execution command is on. Off: The execution command is off.
(5)	o_bOK	Normal completion	Bit	Off	The on state indicates that the error reset is complete.
(6)	o_bUnitErr	Unit error outbreak flag	Bit	Off	The on state indicates that a module error has occurred.
(7)	o_uUnitErrCode	Unit error code	Word [unsigned]	0	The error code of an error occurred is stored.
(8)	o_uUnitAlarmCode	Unit alarm code	Word [unsigned]	0	The alarm code of an alarm occurred is stored.
(9)	o_bErr	Error completion	Bit	Off	Always off
(10)	o_uErrId	Error code	Word [unsigned]	0	Always 0

FB details

Item	Description	
Relevant devices	Relevant modules	R60AD4, R60ADV8, R60ADI8, R60AD8-G, R60AD16-G, R60ADH4, R60ADI8-HA, R60AD6-DG
	Relevant CPU modules	MELSEC iQ-R series CPU modules
	Relevant engineering tool	GX Works3
Language to use	Ladder diagram	
Number of basic steps	■R60AD4, R60ADV8, R60ADI8, R60AD8-G, R60AD16-G, R60AD6-DG 61 steps ■R60ADH4 63 steps ■R60ADI8-HA 53 steps The number of steps of the FB embedded in a program depends on the CPU module used, the input/output definitions, and the options setting of GX Works3. For the options setting of GX Works3, refer to the GX Works3 Operating Manual.	
Functional description	• As i_bEN (execution command) turns on, errors and the alarm (input signal error) in the target module are monitored. • After i_bEN (execution command) turns on, turning on i_bErrReset (error reset request) during an error or the alarm (input signal error) allows the error to be reset.	
FB compilation method	Macro type	
FB operation	Arbitrary execution type	

Item	Description
Timing chart of I/O signals	■When an error occurs 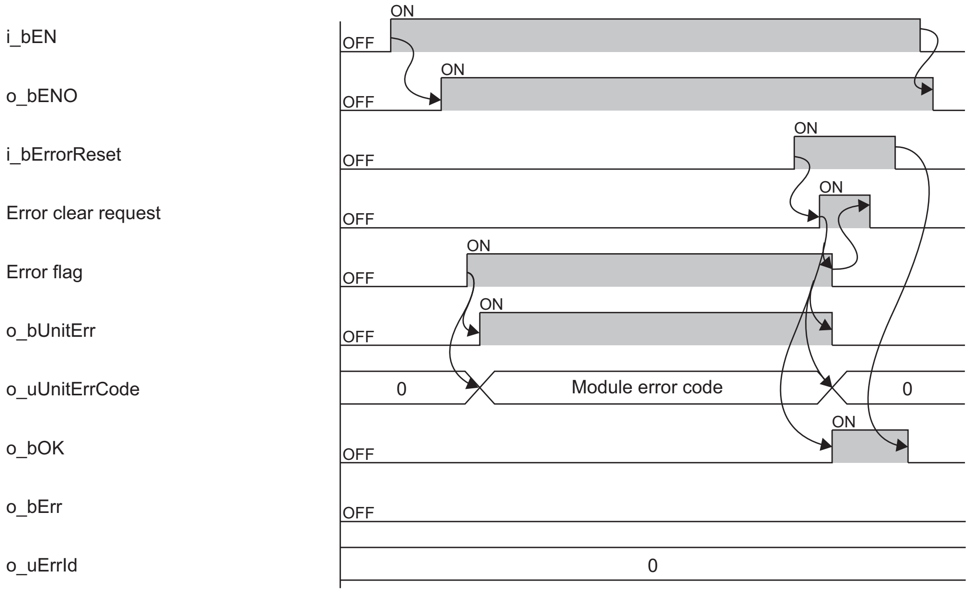 i_bEN o_bENO i_bErrorReset Error clear request Error flag o_bUnitErr o_uUnitErrCode o_bOK o_bErr o_uErrId ON OFF 0 Module error code 0 0 ■When the alarm (input signal error) occurs 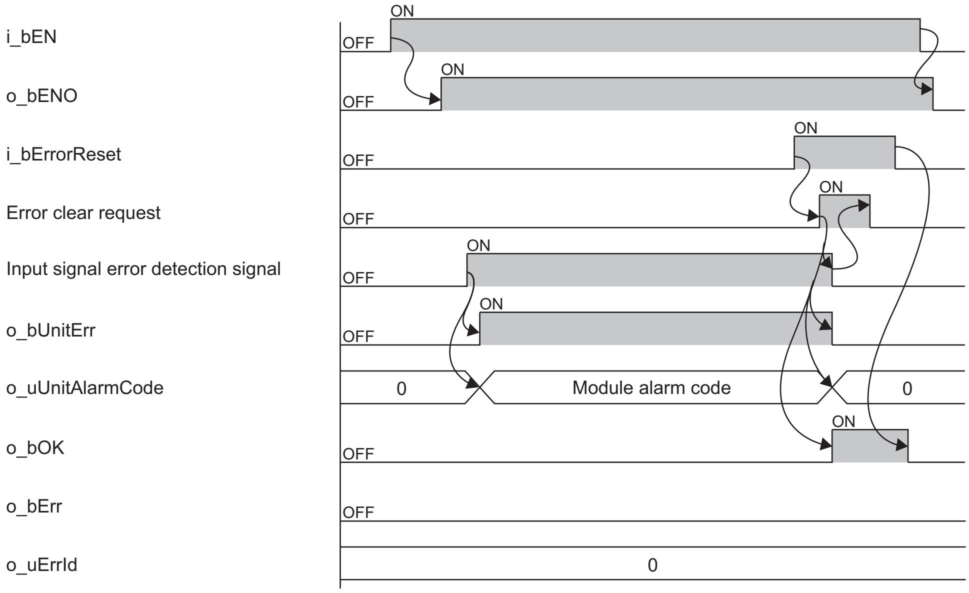 i_bEN o_bENO i_bErrorReset Error clear request Input signal error detection signal o_bUnitErr o_uUnitAlarmCode o_bOK o_bErr o_uErrId ON OFF 0 Module alarm code 0 0
Restrictions and precautions	• This FB does not include the error recovery processing. Prepare the error recovery processing separately to suit the user's system and the expected operation. • The FB cannot be used in an interrupt program. • Alarms other than the input signal error cannot be monitored and reset. • Putting an analog-digital converter module into operation requires the input range to be set according to the connected devices and the system in use. Set up the module parameters of GX Works3 according to the application. For how to set up the module parameters, refer to the user's manual (Application) of the analog-digital converter module used.

Error code

Error code	Description	Action
None	None	None

2.3 M+Model_SetLoggingParam

Name

The module names of the FB are based on the module used and are as follows.

■R60AD4, R60ADV8, R60ADI8

M+R60AD_SetLoggingParam

■R60AD8-G, R60AD16-G

M+R60ADG_SetLoggingParam

■R60ADH4

M+R60ADH_SetLoggingParam

■R60AD6-DG

M+R60ADDG_SetLoggingParam

Overview

Item	Description
Functional overview	■R60AD4, R60ADV8, R60ADI8, R60AD8-G, R60AD16-G, R60AD6-DG Sets up the logging function of a specified channel. ■R60ADH4 Sets up the normal logging function of a specified channel.
Symbol	■R60AD4, R60ADV8, R60ADI8, R60AD8-G, R60AD16-G 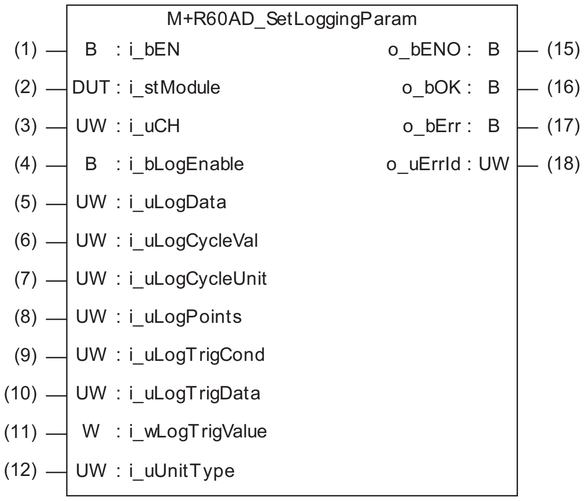 M+R60AD_SetLoggingParam (1) B : i_bEN (2) DUT : i_stModule (3) UW : i_uCH (4) B : i_bLogEnable (5) UW : i_uLogData (6) UW : i_uLogCycleVal (7) UW : i_uLogCycleUnit (8) UW : i_uLogPoints (9) UW : i_uLogTrigCond (10) UW : i_uLogTrigData (11) W : i_wLogTrigValue (12) UW : i_uUnitType o_bENO : B (15) o_bOK : B (16) o_bErr : B (17) o_uErrId : UW (18) ■R60ADH4 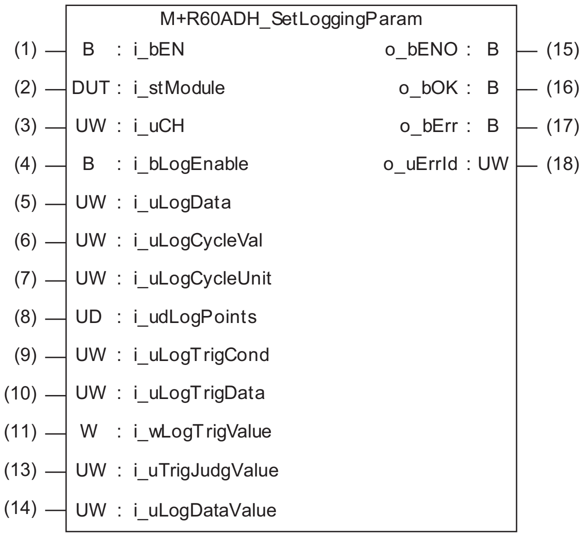 M+R60ADH_SetLoggingParam (1) B : i_bEN (2) DUT : i_stModule (3) UW : i_uCH (4) B : i_bLogEnable (5) UW : i_uLogData (6) UW : i_uLogCycleVal (7) UW : i_uLogCycleUnit (8) UD : i_udLogPoints (9) UW : i_uLogTrigCond (10) UW : i_uLogTrigData (11) W : i_wLogTrigValue (13) UW : i_uTrigJudgValue (14) UW : i_uLogDataValue o_bENO : B (15) o_bOK : B (16) o_bErr : B (17) o_uErrId : UW (18) ■R60AD6-DG 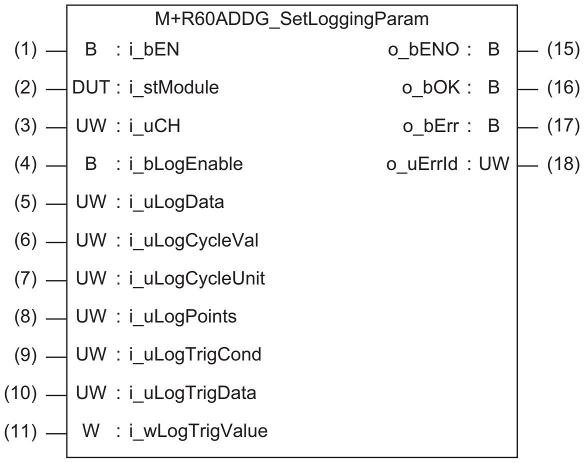 M+R60ADDG_SetLoggingParam (1) B : i_bEN (2) DUT : i_stModule (3) UW : i_uCH (4) B : i_bLogEnable (5) UW : i_uLogData (6) UW : i_uLogCycleVal (7) UW : i_uLogCycleUnit (8) UW : i_uLogPoints (9) UW : i_uLogTrigCond (10) UW : i_uLogTrigData (11) W : i_wLogTrigValue o_bENO : B (15) o_bOK : B (16) o_bErr : B (17) o_uErrId : UW (18)

Labels to use

■Input labels

No.	Variable name	Name	Data type	Scope	Description
(1)	i_bEN	Execution command	Bit	On or off	On: The FB is activated. Off: The FB is not activated.
(2)	i_stModule	Module label	Structure	The scope differs depending on the module label.	Specifies a module label of the analog-digital converter module.
(3)	i_uCH	Target channel	Word [unsigned]	■R60AD4, R60ADV8, R60ADI8 R60AD4: 1 to 4 R60ADV8/R60ADI8: 1 to 8 ■R60AD8-G, R60AD16-G R60AD8-G: 1 to 8 R60AD16-G: 1 to 16 ■R60ADH4 1 to 4 ■R60AD6-DG 1 to 6	Specifies a channel number.
(4)	i_bLogEnable	Logging enable/ disable setting	Bit	On or off	■R60AD4, R60ADV8, R60ADI8, R60AD8-G, R60AD16-G, R60AD6-DG On: Enables the logging function. Off: Disables the logging function. ■R60ADH4 On: Sets normal logging as the logging function. Off: Disables the logging function.
(5)	i_uLogData	Logging data setting	Word [unsigned]	0: Digital output value 1: Digital operation value	Sets the data to be logged.
(6)	i_uLogCycleVal	Logging cycle setting value	Word [unsigned]	■R60AD4, R60ADV8, R60ADI8 When the logging cycle unit setting is 0: 80 to 32767 When the logging cycle unit setting is 1: 1 to 32767 When the logging cycle unit setting is 2: 1 to 3600 ■R60AD8-G, R60AD16-G, R60AD6-DG When the logging cycle unit setting is 1: 10 to 32767 When the logging cycle unit setting is 2: 1 to 3600 ■R60ADH4 When the logging cycle unit setting is 0: 20 to 32767 When the logging cycle unit setting is 1: 1 to 32767 When the logging cycle unit setting is 2: 1 to 3600	Sets the interval of cycles at which data is stored.
(7)	i_uLogCycleUnit	Logging cycle unit setting	Word [unsigned]	■R60AD4, R60ADV8, R60ADI8 0: µs 1: ms 2: s ■R60AD8-G, R60AD16-G, R60AD6-DG 1: ms 2: s ■R60ADH4 0: µs 1: ms 2: s	Specifies the unit of cycles at which data is stored.

No.	Variable name	Name	Data type	Scope	Description
(8)	i_uLogPoints	Number of post-trigger logging points	Word [unsigned]	■R60AD4, R60ADV8, R60ADI8 1 to 10000	Specifies the number of data to be logged after a hold trigger occurs by one point.
				■R60AD8-G, R60AD16-G, R60AD6-DG 1 to 1000	
	i_udLogPoints		Double Word [unsigned]	■R60ADH4 1 to 90000	
(9)	i_uLogTrigCond	Level trigger condition setting	Word [unsigned]	■R60AD4, R60ADV8, R60ADI8, R60AD8-G, R60AD16-G, R60AD6-DG 0: Disable 1: Rise 2: Fall 3: Rise and fall	Sets the condition in which a level trigger is to be used. Set 0 if using no lever trigger.
				■R60ADH4 0: Disable 1: Level trigger (rise) 2: Level trigger (fall) 3: Level trigger (rise and fall) 4: Process alarm (upper limit warning) 5: Process alarm (lower limit warning) 6: Process alarm (upper limit warning/lower limit warning)	
(10)	i_uLogTrigData	Trigger data	Word [unsigned]	0 to 9999	Specifies a buffer memory address to be monitored by level trigger.
(11)	i_wLogTrigValue	Trigger setting value	Word [signed]	-32768 to 32767	Sets the level at which a level trigger is generated.
(12)	i_uUnitType	Module type	Word [unsigned]	■R60AD4, R60ADV8, R60ADI8 0: R60AD4 1: R60ADV8 2: R60ADI8	Specifies a module type.
				■R60AD8-G, R60AD16-G 0: R60AD8-G 1: R60AD16-G	
(13)	i_uTrigJudgValue	Trigger judgment count setting value	Word [unsigned]	■R60ADH4 1 to 10	Sets up the count to judge a level trigger.
(14)	i_uLogDataValue	Logging data points setting	Word [unsigned]	■R60ADH4 0 to 900	Specifies the number of the logging data points of the channel to which the logging function is to be used by 100 points. ■Example • When i_uLogDataValue (logging data points setting) is 1, the number of read points is 100. • When i_uLogDataValue (logging data points setting) is 900, the number of read points is 90000.

■Output labels

No.	Variable name	Name	Data type	Default value	Description
(15)	o_bENO	Execution status	Bit	Off	On: The execution command is on. Off: The execution command is off.
(16)	o_bOK	Normal completion	Bit	Off	The on state indicates that the setting of the logging function parameters is completed.
(17)	o_bErr	Error completion	Bit	Off	The on state indicates that an error has occurred in the FB.
(18)	o_uErrId	Error code	Word [unsigned]	0	The error code of an error occurred in the FB is stored.

FB details

Item	Description	
Relevant devices	Relevant modules	R60AD4, R60ADV8, R60ADI8, R60AD8-G, R60AD16-G, R60ADH4, R60AD6-DG
	Relevant CPU modules	MELSEC iQ-R series CPU modules
	Relevant engineering tool	GX Works3
Language to use	Ladder diagram	
Number of basic steps	■R60AD4, R60ADV8, R60ADI8, R60AD8-G, R60AD16-G 437 steps ■R60ADH4 142 steps ■R60AD6-DG 122 steps The number of steps of the FB embedded in a program depends on the CPU module used, the input/output definitions, and the options setting of GX Works3. For the options setting of GX Works3, refer to the GX Works3 Operating Manual.	
Functional description	• Turning on i_bEN (execution command) allows the logging function of a specified channel to be set. • This FB works for only one shot as i_bEN (execution command) turns on. • The set value is enabled by turning on and off 'Operating condition setting request' (Yn9) or executing the operating condition setting request operation FB (M+Model_RequestSetting). • If the set value of the target channel is out of the range or if the operation mode of the R60ADH4 is not the normal mode, o_bErr (error completion) turns on and the processing of the FB is interrupted. In addition, the error code is stored in o_uErrId (error code). For the error code, refer to the list of error codes. (☞ Page 14 Error code)	
FB compilation method	Macro type	
FB operation	Pulse execution type (single scan execution type)	
Timing chart of I/O signals	■When the operation is completed successfully 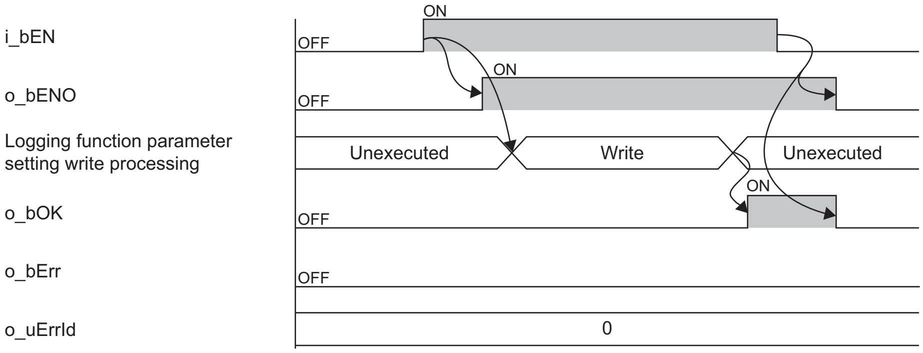 i_bEN o_bENO Logging function parameter setting write processing o_bOK o_bErr o_uErrId ON OFF Unexecuted Write 0 ■When the operation is completed with an error 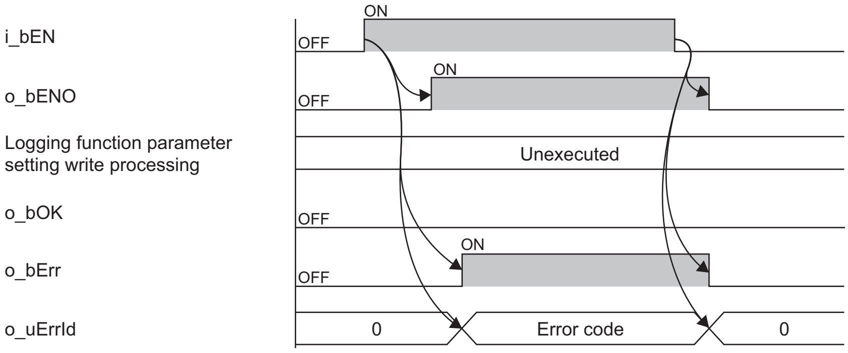 i_bEN o_bENO Logging function parameter setting write processing o_bOK o_bErr o_uErrId ON OFF Unexecuted 0 Error code	
Restrictions and precautions	• This FB does not include the error recovery processing. Prepare the error recovery processing separately to suit the user's system and the expected operation. • The FB cannot be used in an interrupt program. • Using the FB in a program that is to be executed only once, such as a subroutine program or a FOR-NEXT loop, has a problem that i_bEN (execution command) can no longer be turned off and normal operation is not possible; Always use the FB in a program that is capable of turning off the execution command. • To use more than one of this FB, care must be taken to avoid duplication of the target channel. • The FB requires the configuration of the ladder for every input label. • If the parameters are set by means of the module parameters of GX Works3, this FB is not required. • Putting an analog-digital converter module into operation requires the input range to be set according to the connected devices and the system in use. Set up the module parameters of GX Works3 according to the application. For how to set up the module parameters, refer to the user's manual (Application) of the analog-digital converter module used.	

Error code

Error code	Description	Action
100H	■R60AD4, R60ADV8, R60ADI8 The target channel is set out of the range. Set the target channel within the following range. • R60AD4: 1 to 4 • R60ADV8/R60ADI8: 1 to 8	Review and correct the setting and then execute the FB again.
	■R60AD8-G, R60AD16-G The target channel is set out of the range. Set the target channel within the following range. • R60AD8-G: 1 to 8 • R60AD16-G: 1 to 16	
	■R60ADH4 The target channel is set out of the range. Set the target channel within the range of 1 to 4.	
	■R60AD6-DG The target channel is set out of the range. Set the target channel within the range of 1 to 6.	
102H	■R60AD4, R60ADV8, R60ADI8 The module type is set out of the range. Set the module type to the following values. • R60AD4: 0 • R60ADV8: 1 • R60ADI8: 2	Review and correct the setting and then execute the FB again.
	■R60AD8-G, R60AD16-G The module type is set out of the range. Set the module type to the following values. • R60AD8-G: 0 • R60AD16-G: 1	
206H	■R60ADH4 The operation mode is not the normal mode. Change the operation mode to the normal mode (low speed: 20μs/CH).	Change the operation mode to the normal mode (low speed: 20μs/CH) and then execute the FB again.

2.4 M+Model_SaveLogging

Name

The module names of the FB are based on the module used and are as follows.

■R60AD4, R60ADV8, R60ADI8

M+R60AD_SaveLogging

■R60AD8-G, R60AD16-G

M+R60ADG_SaveLogging

■R60ADH4

M+R60ADH_SaveLogging

■R60AD6-DG

M+R60ADDG_SaveLogging

Overview

Item	Description
Functional overview	■R60AD4, R60ADV8, R60ADI8, R60AD8-G, R60AD16-G, R60AD6-DG Saves the logging data of a specified channel into a file. ■R60ADH4 Saves the logging data of a specified channel collected by the normal logging function into a file.
Symbol	■R60AD4, R60ADV8, R60ADI8, R60AD8-G, R60AD16-G 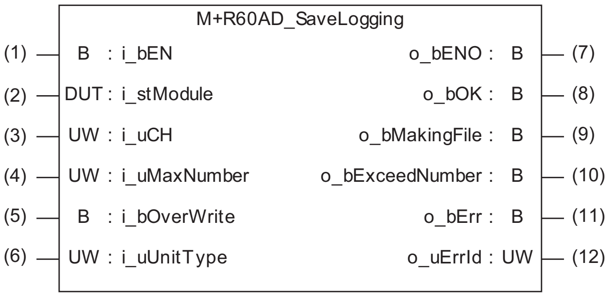 M+R60AD_SaveLogging (1) B : i_bEN (2) DUT : i_stModule (3) UW : i_uCH (4) UW : i_uMaxNumber (5) B : i_bOverWrite (6) UW : i_uUnitType o_bENO : B (7) o_bOK : B (8) o_bMakingFile : B (9) o_bExceedNumber : B (10) o_bErr : B (11) o_uErrId : UW (12) ■R60ADH4, R60AD6-DG 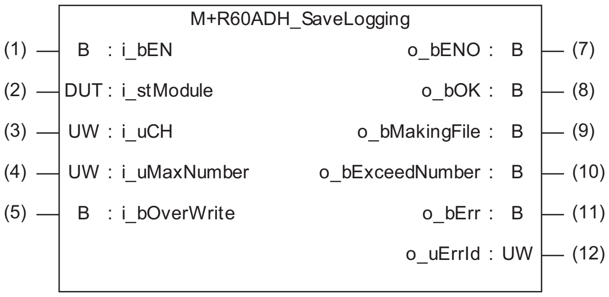 M+R60ADH_SaveLogging (1) B : i_bEN (2) DUT : i_stModule (3) UW : i_uCH (4) UW : i_uMaxNumber (5) B : i_bOverWrite o_bENO : B (7) o_bOK : B (8) o_bMakingFile : B (9) o_bExceedNumber : B (10) o_bErr : B (11) o_uErrId : UW (12)

Labels to use

■Input labels

No.	Variable name	Name	Data type	Scope	Description
(1)	i_bEN	Execution command	Bit	On or off	On: The FB is activated. Off: The FB is not activated.
(2)	i_stModule	Module label	Structure	The scope differs depending on the module label.	Specifies a module label of the analog-digital converter module.
(3)	i_uCH	Target channel	Word [unsigned]	■R60AD4, R60ADV8, R60ADI8 R60AD4: 1 to 4 R60ADV8/R60ADI8: 1 to 8	Specifies a channel number.
				■R60AD8-G, R60AD16-G R60AD8-G: 1 to 8 R60AD16-G: 1 to 16	
				■R60ADH4 1 to 4	
				■R60AD6-DG 1 to 6	
(4)	i_uMaxNumber	Maximum number of save files	Word [unsigned]	1 to 999	Specifies the maximum number of CSV files that this FB saves.
(5)	i_bOverWrite	Overwrite preservation order	Bit	On or off	Specify whether or not to overwrite the CSV files having smaller consecutive numbers when the number of CSV files that this FB has saved reaches the maximum number of save files. If the setting is off, the save processing of logging data stops.
(6)	i_uUnitType	Module type	Word [unsigned]	■R60AD4, R60ADV8, R60ADI8 0: R60AD4 1: R60ADV8 2: R60ADI8	Specifies a module type that is to be written to the file version of the CSV file that this FB saves.
				■R60AD8-G, R60AD16-G 0: R60AD8-G 1: R60AD16-G	

■Output labels

No.	Variable name	Name	Data type	Default value	Description
(7)	o_bENO	Execution status	Bit	Off	On: The execution command is on. Off: The execution command is off.
(8)	o_bOK	Normal completion	Bit	Off	The on state indicates that the file save is complete. This label turns off as logging resumes.
(9)	o_bMakingFile	Under file making	Bit	Off	The on state indicates that files are being created.
(10)	o_bExceedNumber	Maximum number arrival flag	Bit	Off	The on state indicates that the number of CSV files that this FB has saved has reached the maximum number of save files.
(11)	o_bErr	Error completion	Bit	Off	The on state indicates that an error has occurred in the FB.
(12)	o_uErrId	Error code	Word [unsigned]	0	The error code of an error occurred in the FB is stored.

FB details

Item	Description	
Relevant devices	Relevant modules	R60AD4, R60ADV8, R60ADI8, R60AD8-G, R60AD16-G, R60ADH4, R60AD6-DG
	Relevant CPU modules	MELSEC iQ-R series CPU modules
	Relevant engineering tool	GX Works3
Language to use	Ladder diagram	
Number of basic steps	■R60AD4, R60ADV8, R60ADI8, R60AD8-G, R60AD16-G 2309 steps ■R60ADH4 1363 steps ■R60AD6-DG 1335 steps The number of steps of the FB embedded in a program depends on the CPU module used, the input/output definitions, and the options setting of GX Works3. For the options setting of GX Works3, refer to the GX Works3 Operating Manual.	
Functional description	• As i_bEN (execution command) turns on and the logging hold flag turns on, the FB sorts the logging data, the number of which is equal to the number of logging points, in a chronological order from the head pointer, and saves the data along with the trigger generation information in the SD memory card, inserted into the CPU module, in a CSV format. • Provided that i_bEN (execution command) is on, this FB starts the save processing of logging data every time the logging hold flag turns on. • It takes multiple scans to complete the save processing of logging data. Check o_bOK (normal completion) to see that the processing is complete. • When this FB saves data in an SD memory card, the file name is given as follows: "AD" + "Middle two digits of the four digits representing the start I/O number of the analog-digital converter module" + "Target channel" + "Consecutive number" + ".CSV". The maximum number of consecutive number varies with i_uMaxNumber (maximum number of save files). Turning off i_bEN (execution command) results in the consecutive number being reset, and thereafter a consecutive number is given from 1 again. Suppose that the start I/O number of the analog-digital converter module is H0450, the target channel is 3, i_uMaxNumber (maximum number of save files) is 30, and the number of file creation by this FB is 6th. For the R60AD4, R60ADV8, R60ADI8, and R60ADH4, the file name is "AD453006.CSV"; for the R60AD8-G, R60AD16-G, and R60AD6-DG, the file name is "AD4503006.CSV". • When this FB creates a CSV file in an SD memory card, a file of the same name, if already exists in the SD memory card, is replaced with the newly created file. • If i_bOverWrite (overwrite save command) is on and the number of files that this FB has saved in an SD memory card exceeds i_uMaxNumber (maximum number of save files), the consecutive number returns back to 1 and the save processing of logging data continues. • If i_bOverWrite (overwrite save command) is off and the number of files that this FB has saved in an SD memory card reaches i_uMaxNumber (maximum number of save files), the save processing of logging data stops. • If the number of files that this FB has saved in an SD memory card reaches i_uMaxNumber (maximum number of save files), o_bExceedNumber (maximum number reach flag) turns on regardless of the on or off state of i_bOverWrite (overwrite save command). • If an incorrect value is set in i_uCH (target channel) or i_uMaxNumber (maximum number of save files), o_bErr (error completion) turns on and the processing of the FB is interrupted. In addition, the error code is stored in o_uErrId (error code). • A CPU error occurs in the following cases: when this FB has been executed with no SD memory card inserted into the CPU module; when the inserted SD memory card has no sufficient free space; or when the number of files stored is exceeded. In the event of an error, if the CPU module is in a stop error state, o_bErr (error completion) and o_uErrId (error code) are not updated. In the event of an error, if the CPU module is in a continuation error state, o_bErr (error completion) turns on and the error code is stored in o_uErrId (error code). For the capacity of SD memory cards and the number of files stored, refer to the MELSEC iQ-R Module Configuration Manual. The operating status (continue or stop) of the CPU module at the time of the failure of access to the SD memory card can be set with the parameter. • For the format of CSV files that this FB creates, refer to CSV File Output Format of the FB for Saving Logging Data (☞ Page 73 CSV File Output Format of the FB for Saving Logging Data).	
FB compilation method	Macro type	
FB operation	Arbitrary execution type	

Item	Description
Timing chart of I/O signals	■When the operation is completed successfully 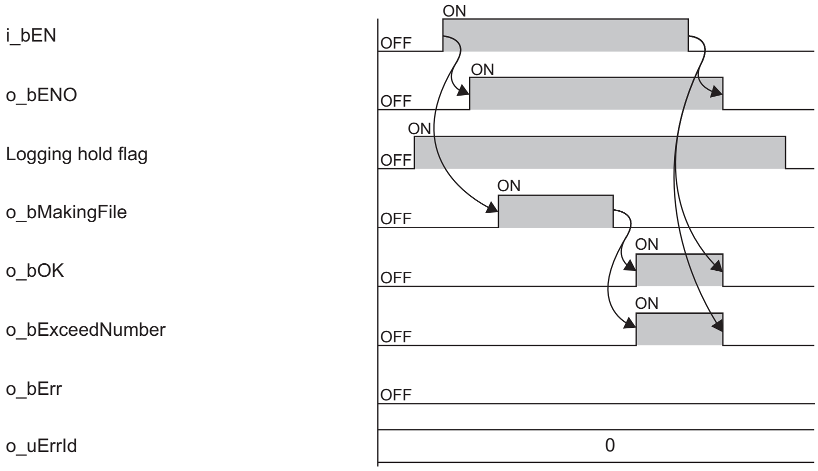 i_bEN o_bENO Logging hold flag o_bMakingFile o_bOK o_bExceedNumber o_bErr o_uErrId ON OFF 0 ■When the operation is completed with an error 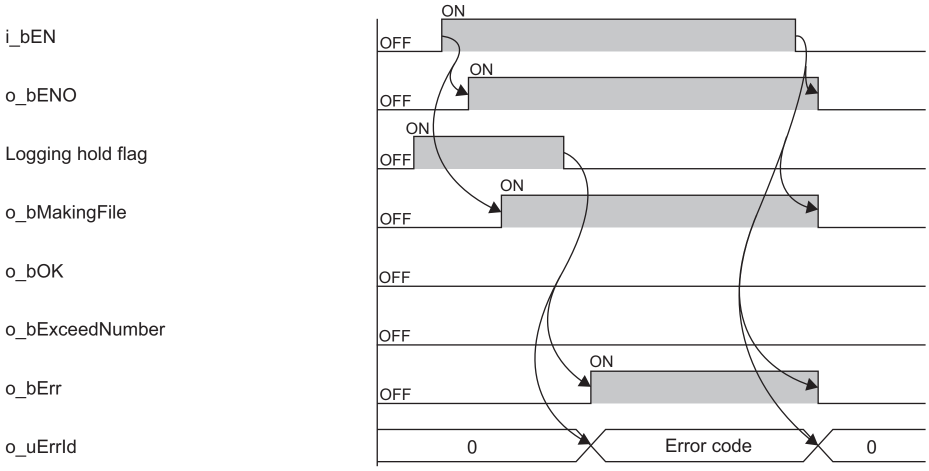 i_bEN o_bENO Logging hold flag o_bMakingFile o_bOK o_bExceedNumber o_bErr o_uErrId ON OFF 0 Error code 0
Restrictions and precautions	• This FB does not include the error recovery processing. Prepare the error recovery processing separately to suit the user's system and the expected operation. • The FB cannot be used in an interrupt program. • Using the FB in a program that is to be executed only once, such as a subroutine program or a FOR-NEXT loop, has a problem that i_bEN (execution command) can no longer be turned off and normal operation is not possible; Always use the FB in a program that is capable of turning off the execution command. • This FB cannot save logging data in a medium other than an SD memory card. • This FB makes use of the SP.FWRITE instruction, and thus if an error occurs in the execution of the SP.FWRITE instruction, a CPU error occurs. • To use more than one of this FB, create an interlock to avoid simultaneous execution. When saving logging data of channel 1 and channel 2, first check that o_bOK (normal completion) of the FB on channel 1 is on, and turn on i_bEN (execution command) of the FB on channel 2. • If SM606 (SD memory card forced disable instruction) is on at the time of saving logging data, the SP.FWRITE instruction is not processed, resulting in the logging data not being saved. In this case, o_bErr (error completion) turns on and the error code is stored in o_uErrId (error code). • The FB requires the configuration of the ladder for every input label. • Set i_uMaxNumber (maximum number of save files) with consideration for the capacity of the SD memory card and the number of files stored. If the capacity of the SD memory card or the number of files stored is exceeded as a result of execution of this FB, a CPU error occurs. For the capacity of SD memory cards and the number of files stored, refer to the MELSEC iQ-R Module Configuration Manual. • Putting an analog-digital converter module into operation requires the input range to be set according to the connected devices and the system in use. Set up the module parameters of GX Works3 according to the application. For how to set up the module parameters, refer to the user's manual (Application) of the analog-digital converter module used.

Error code

Error code	Description	Action
100H	■R60AD4, R60ADV8, R60ADI8 The target channel is set out of the range. Set the target channel within the following range. R60AD4: 1 to 4 R60ADV8/R60ADI8: 1 to 8	Review and correct the setting and then execute the FB again.
	■R60AD8-G, R60AD16-G The target channel is set out of the range. Set the target channel within the following range. R60AD8-G: 1 to 8 R60AD16-G: 1 to 16	
	■R60ADH4 The target channel is set out of the range. Set the target channel within the range of 1 to 4.	
	■R60AD6-DG The target channel is set out of the range. Set the target channel within the range of 1 to 6.	
101H	The maximum number of save files is set out of the range. The maximum number of save files is set out of the range of 1 to 999.	Review and correct the setting and then execute the FB again.
102H	■R60AD4, R60ADV8, R60ADI8 The module type is set out of the range. Set the module type to the following values. • R60AD4: 0 • R60ADV8: 1 • R60ADI8: 2	Review and correct the setting and then execute the FB again.
	■R60AD8-G, R60AD16-G The module type is set out of the range. Set the module type to the following values. • R60AD8-G: 0 • R60AD16-G: 1	
200H	The processing is interrupted because the logging hold flag turns off while logging data is being saved. The partially created CSV file is saved in the SD memory card.	—
201H	An access to the SD memory card has failed because SM606 (SD memory card forced disable instruction) is turned on. While logging data is being saved, turning on SM606 (SD memory card forced disable instruction) results in the partially created CSV file being saved in the SD memory card.	Turn off SM606 and check that SM607 (SD memory card forced stop status flag) is turned off, then execute the FB again.
202H	Execution of this FB has been attempted without inserting an SD memory card into the CPU module.	Insert an SD memory card for saving the target CSV files into the CPU module, and then execute the FB again.
203H	An access to the SD memory card has failed because SM600 (Memory card available flag) is off (unavailable).	Make the SD memory card an available state, and then execute the FB again.
204H	The SD memory card is frequently accessed from programs in addition to this FB, and a timeout has occurred in the logging data write processing.	Reduce the frequency of the access to the SD memory card.
205H	Because SM601 (Memory card protect flag) is on (write inhibited), data cannot be written to the SD memory card.	Turn off (write enabled) the protect switch on the SD memory card, check that SM601 is off, and execute the FB again.
206H	■R60ADH4 The operation mode is not the normal mode. Change the operation mode to the normal mode (low speed: 20μs/CH).	Change the operation mode to the normal mode (low speed: 20μs/CH) and then execute the FB again.
Error codes other than the above	Error codes related to the SP.FWRITE instruction executed when logging data is written to an SD memory card	For details on the error code that has occurred, refer to the description of the SP.FWRITE instruction. (📖 MELSEC iQ-R Programming Manual (Instructions, Standard Functions/Function Blocks))

2.5 M+Model_SetContinuousLoggingParam

Name

The module names of the FB are based on the module used and are as follows.

■R60ADH4

M+R60ADH_SetContinuousLoggingParam

Overview

Item	Description
Functional overview	Sets the parameters of the continuous logging function.
Symbol	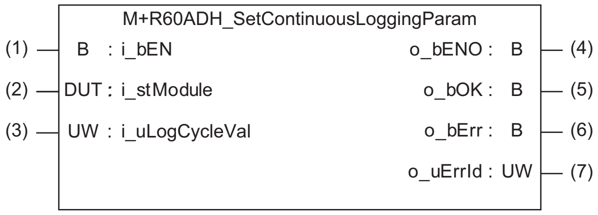 M+R60ADH_SetContinuousLoggingParam (1) B : i_bEN (2) DUT : i_stModule (3) UW : i_uLogCycleVal o_bENO : B (4) o_bOK : B (5) o_bErr : B (6) o_uErrId : UW (7)

Labels to use

■Input labels

No.	Variable name	Name	Data type	Scope	Description
(1)	i_bEN	Execution command	Bit	On or off	On: The FB is activated. Off: The FB is not activated.
(2)	i_stModule	Module label	Structure	The scope differs depending on the module label.	Specifies a module label of the analog-digital converter module.
(3)	i_uLogCycleVal	Continuous logging cycle setting value	Word [unsigned]	1 to 1000	Sets the interval of cycles at which data is stored.

■Output labels

No.	Variable name	Name	Data type	Default value	Description
(4)	o_bENO	Execution status	Bit	Off	On: The execution command is on. Off: The execution command is off.
(5)	o_bOK	Normal completion	Bit	Off	The on state indicates that the setting of the continuous logging function parameters is completed.
(6)	o_bErr	Error completion	Bit	Off	The on state indicates that an error has occurred in the FB.
(7)	o_uErrId	Error code	Word [unsigned]	0	The error code of an error occurred in the FB is stored.

FB details

Item	Description	
Relevant devices	Relevant modules	R60ADH4
	Relevant CPU modules	MELSEC iQ-R series CPU modules
	Relevant engineering tool	GX Works3
Language to use	Ladder diagram	
Number of basic steps	54 steps The number of steps of the FB embedded in a program depends on the CPU module used, the input/output definitions, and the options setting of GX Works3. For the options setting of GX Works3, refer to the GX Works3 Operating Manual.	
Functional description	• Turning on i_bEN (execution command) sets the parameters of the continuous logging function. • This FB works for only one shot as i_bEN (execution command) turns on. • The set value is enabled by turning on and off 'Operating condition setting request' (Yn9) or executing the operating condition setting request operation FB (M+Model_RequestSetting). • This FB can be used only when the operation mode is set to the simultaneous conversion mode. When the operation mode is set to the inter-module synchronization mode, the continuous logging cycle cannot be changed even though the continuous logging cycle setting value is set. • If a setting value other than 1 to 1000 is set as the continuous logging cycle setting value, o_bErr (error completion) turns on and the processing of the FB is interrupted. In addition, the error code is stored in o_uErrId (error code). For the error code, refer to the list of error codes. (☞ Page 22 Error code) • If the operation mode is not the simultaneous conversion mode, o_bErr (error completion) turns on and the processing of the FB is interrupted. In addition, the error code is stored in o_uErrId (error code). For the error code, refer to the list of error codes. (☞ Page 22 Error code)	
FB compilation method	Macro type	
FB operation	Pulse execution type (single scan execution type)	
Timing chart of I/O signals	■When the operation is completed successfully 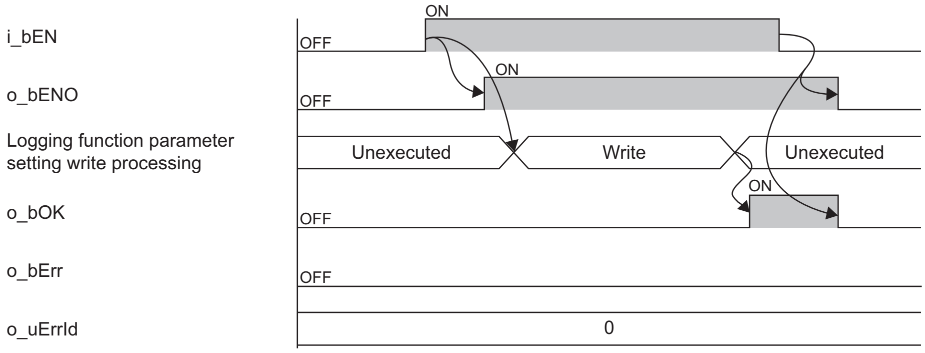 i_bEN o_bENO Logging function parameter setting write processing o_bOK o_bErr o_uErrId ON OFF ON OFF Unexecuted Write Unexecuted ON OFF OFF 0 ■When the operation is completed with an error 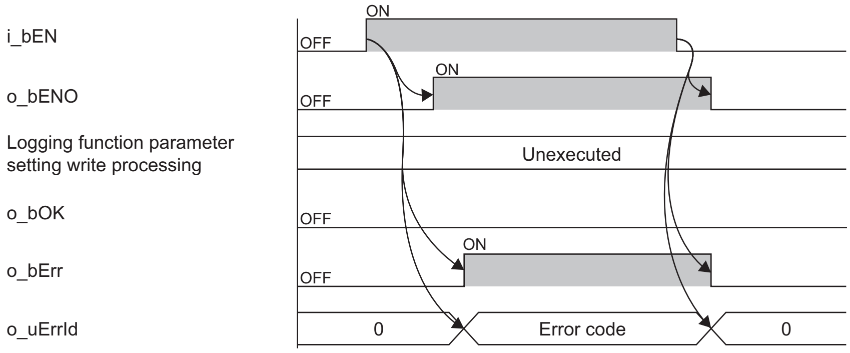 i_bEN o_bENO Logging function parameter setting write processing o_bOK o_bErr o_uErrId ON OFF ON OFF Unexecuted OFF ON OFF 0 Error code 0	
Restrictions and precautions	• This FB does not include the error recovery processing. Prepare the error recovery processing separately to suit the user's system and the expected operation. • The FB cannot be used in an interrupt program. • Using the FB in a program that is to be executed only once, such as a subroutine program or a FOR-NEXT loop, has a problem that i_bEN (execution command) can no longer be turned off and normal operation is not possible; Always use the FB in a program that is capable of turning off the execution command. • The FB requires the configuration of the ladder for every input label. • If the parameters are set by means of the module parameters of GX Works3, this FB is not required. • Putting an analog-digital converter module into operation requires the input range to be set according to the connected devices and the system in use. Set up the module parameters of GX Works3 according to the application. For how to set up the module parameters, refer to the user's manual (Application) of the analog-digital converter module used.	

Error code

Error code	Description	Action
103H	The continuous logging cycle setting value is set out of the range. Set a value of 1 to 1000 as the continuous logging cycle setting value.	Review and correct the setting and then execute the FB again.
207H	The operation mode is not the simultaneous conversion mode. Change the operation mode to the simultaneous conversion mode.	Change the operation mode to the simultaneous conversion mode and then execute the FB again.

2.6 M+Model_ContinuousLoggingRequest

Name

The module names of the FB are based on the module used and are as follows.

■R60ADH4

M+R60ADH_ContinuousLoggingRequest

Overview

Item	Description
Functional overview	Starts/stops the continuous logging.
Symbol	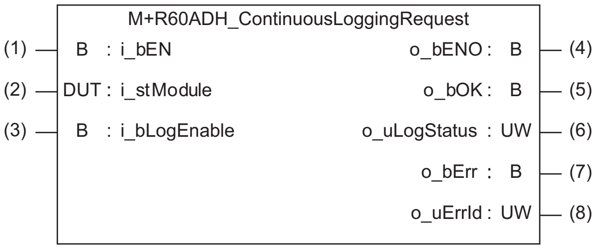 M+R60ADH_ContinuousLoggingRequest (1) B : i_bEN (2) DUT : i_stModule (3) B : i_bLogEnable o_bENO : B (4) o_bOK : B (5) o_uLogStatus : UW (6) o_bErr : B (7) o_uErrId : UW (8)

Labels to use

■Input labels

No.	Variable name	Name	Data type	Scope	Description
(1)	i_bEN	Execution command	Bit	On or off	On: The FB is activated. Off: The FB is not activated.
(2)	i_stModule	Module label	Structure	The scope differs depending on the module label.	Specifies a module label of the analog-digital converter module.
(3)	i_bLogEnable	Continuous logging start/stop request	Bit	Off: Stop On: Start	Off: The continuous logging is stopped. On: The continuous logging is started.

■Output labels

No.	Variable name	Name	Data type	Default value	Description
(4)	o_bENO	Execution status	Bit	Off	On: The execution command is on. Off: The execution command is off.
(5)	o_bOK	Normal completion	Bit	Off	The on state indicates that the continuous logging start or stop request is completed.
(6)	o_uLogStatus	Continuous logging status monitor	Word [unsigned]	0	Indicates the status of the continuous logging. 0: Continuous logging disable status 1: Continuous logging start request waiting 2: Continuous logging in process
(7)	o_bErr	Error completion	Bit	Off	The on state indicates that an error has occurred in the FB.
(8)	o_uErrId	Error code	Word [unsigned]	0	The error code of an error occurred in the FB is stored.

FB details

Item	Description	
Relevant devices	Relevant modules	R60ADH4
	Relevant CPU modules	MELSEC iQ-R series CPU modules
	Relevant engineering tool	GX Works3
Language to use	Ladder diagram	
Number of basic steps	73 steps The number of steps of the FB embedded in a program depends on the CPU module used, the input/output definitions, and the options setting of GX Works3. For the options setting of GX Works3, refer to the GX Works3 Operating Manual.	
Functional description	• As i_bEN (execution command) turns on, the continuous logging start/stop request is written to the buffer memory. • As i_bEN (execution command) turns on, this FB outputs the value of 'Continuous logging status monitor' (Un\G61). • After i_bEN (execution command) turns on, turning i_bLogEnable (continuous logging start/stop request) from off (stop) to on (start) starts the continuous logging function. Turning i_bLogEnable (continuous logging start/stop request) from on (start) to off (stop) stops the continuous logging function. • When the operation mode is the simultaneous conversion mode or the inter-module synchronization mode, the continuous logging start/stop request is executed. • When this FB is executed, the continuous logging data read processing will start or stop after o_bOK (Normal completion) turns on. • If the operation mode is not the simultaneous conversion mode or the inter-module synchronization mode, o_bErr (error completion) turns on and the processing of the FB is interrupted. In addition, the error code is stored in o_uErrId (error code). For the error code, refer to the list of error codes. (☞ Page 25 Error code) • If the continuous logging is in the continuous logging disable status, o_bErr (error completion) turns on and the processing of the FB is interrupted. In addition, the error code is stored in o_uErrId (error code). For the error code, refer to the list of error codes. (☞ Page 25 Error code)	
FB compilation method	Macro type	
FB operation	Arbitrary execution type	
Timing chart of I/O signals	■When the operation is completed successfully 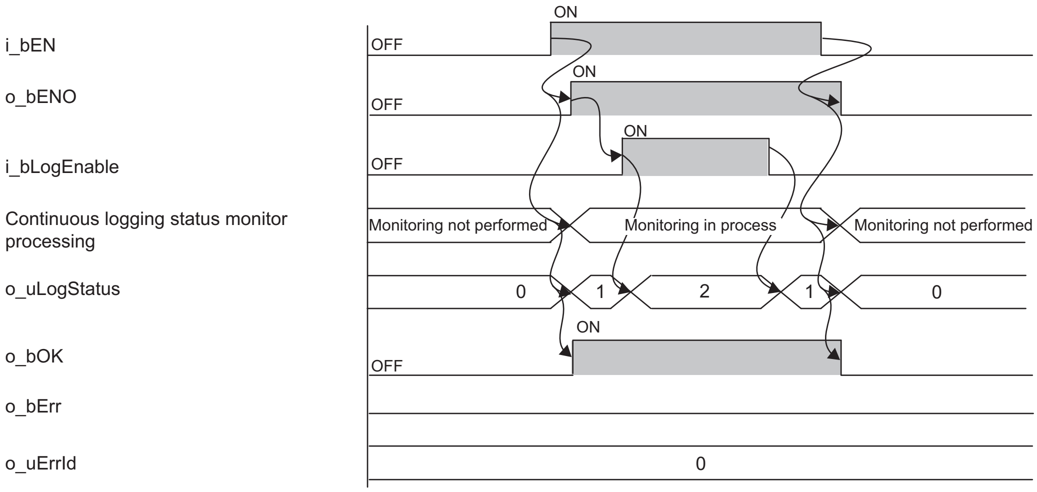 i_bEN o_bENO i_bLogEnable Continuous logging status monitor processing o_uLogStatus o_bOK o_bErr o_uErrId ON OFF Monitoring not performed Monitoring in process Monitoring not performed 0 1 2 1 0 ■When the operation is completed with an error 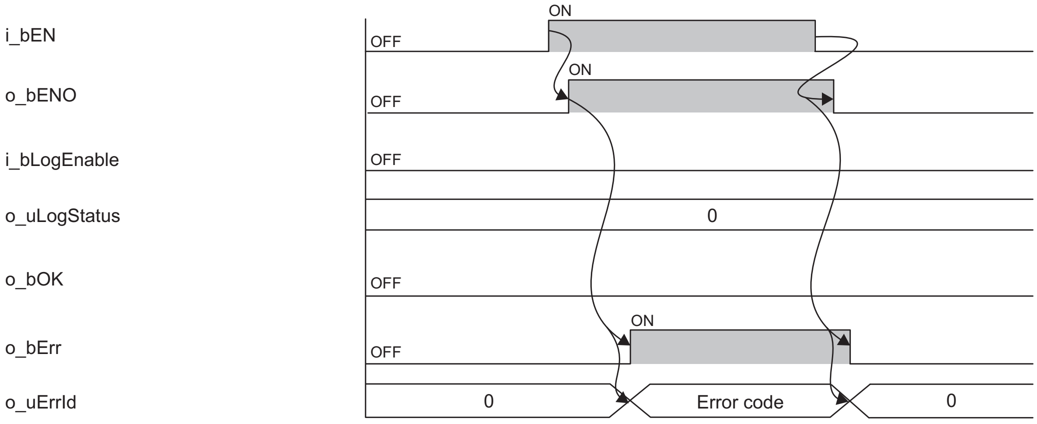 i_bEN o_bENO i_bLogEnable o_uLogStatus o_bOK o_bErr o_uErrId ON OFF 0 Error code 0	

Item	Description
Restrictions and precautions	• This FB does not include the error recovery processing. Prepare the error recovery processing separately to suit the user's system and the expected operation. • The FB cannot be used in an interrupt program. • Using the FB in a program that is to be executed only once, such as a subroutine program or a FOR-NEXT loop, has a problem that i_bEN (execution command) can no longer be turned off and normal operation is not possible; Always use the FB in a program that is capable of turning off the execution command. • The FB requires the configuration of the ladder for every input label. • Putting an analog-digital converter module into operation requires the input range to be set according to the connected devices and the system in use. Set up the module parameters of GX Works3 according to the application. For how to set up the module parameters, refer to the user's manual (Application) of the analog-digital converter module used.

Error code

Error code	Description	Action
207H	The operation mode is not the simultaneous conversion mode or the inter-module synchronization mode. Change the operation mode to the simultaneous conversion mode or inter-module synchronization mode.	Change the operation mode to the simultaneous conversion mode and then execute the FB again.
208H	The continuous logging is in the continuous logging disable status. Check that the continuous logging is not in the continuous logging disable status.	Review and correct the setting and then execute the FB again.

2.7 M+Model_ReadContinuousLogging

Name

The module names of the FB are based on the module used and are as follows.

■R60ADH4

M+R60ADH_ReadContinuousLogging

Overview

Item	Description
Functional overview	Reads out the logging data collected by the continuous logging function and stores the data in a specified file register.
Symbol	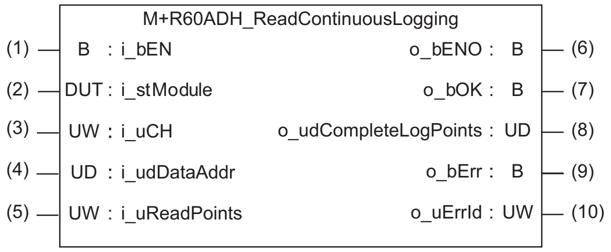 M+R60ADH_ReadContinuousLogging (1) B : i_bEN (2) DUT : i_stModule (3) UW : i_uCH (4) UD : i_udDataAddr (5) UW : i_uReadPoints o_bENO : B (6) o_bOK : B (7) o_udCompleteLogPoints : UD (8) o_bErr : B (9) o_uErrId : UW (10)

Labels to use

■Input labels

No.	Variable name	Name	Data type	Scope	Description
(1)	i_bEN	Execution command	Bit	On or off	On: The FB is activated. Off: The FB is not activated.
(2)	i_stModule	Module label	Structure	The scope differs depending on the module label.	Specifies a module label of the analog-digital converter module.
(3)	i_uCH	Target channel	Word [unsigned]	1 to 4	Specifies a channel number.
(4)	i_udDataAddr	File register start address	Double Word [unsigned]	Valid device range. The scope differs depending on the file register setting of CPU parameters.	Specifies the start address of the file register (ZR).
(5)	i_uReadPoints	Number of read points	Word [unsigned]	1 to 2000	Specifies the number of read points of the continuous logging data by 5000 points. ■Example • When i_uReadPoints (number of read points) is 1, the number of read points is 5000. • When i_uReadPoints (number of read points) is 2000, the number of read points is 10000000.

■Output labels

No.	Variable name	Name	Data type	Default value	Description
(6)	o_bENO	Execution status	Bit	Off	On: The execution command is on. Off: The execution command is off.
(7)	o_bOK	Normal completion	Bit	Off	The on state indicates that the reading of the continuous logging data is completed.
(8)	o_udCompleteLogPoints	Number of read completed logging data points	Double Word [unsigned]	0	Returns the number of read completed logging data points.
(9)	o_bErr	Error completion	Bit	Off	The on state indicates that an error has occurred in the FB.
(10)	o_uErrId	Error code	Word [unsigned]	0	The error code of an error occurred in the FB is stored.

FB details

Item	Description	
Relevant devices	Relevant modules	R60ADH4
	Relevant CPU modules	MELSEC iQ-R series CPU modules
	Relevant engineering tool	GX Works3
Language to use	Ladder diagram	
Number of basic steps	284 steps The number of steps of the FB embedded in a program depends on the CPU module used, the input/output definitions, and the options setting of GX Works3. For the options setting of GX Works3, refer to the GX Works3 Operating Manual.	
Functional description	• Turning on i_bEN (execution command) reads out the continuous logging data of a specified channel. • This FB turns on o_bENO (execution status) while i_bEN (execution command) is on. • When the operation mode is the simultaneous conversion mode or the inter-module synchronization mode, this FB reads out the continuous logging data. • Logging data is continuously transferred into the file register of the CPU module in the storage order of the logging data (A side → B side → A side → ···). When the total of read logging data points reaches the value of i_uReadPoints (number of read points) × 5000 points, the data transfer ends and o_bOK (normal completion) turns on. • When both of Continuous logging data A side storage flag and Continuous logging data B side storage flag are on at the first execution of this FB, they are turned off and the continuous logging data is read. • If both of Continuous logging data A side storage flag and Continuous logging data B side storage flag are turned on during the execution of this FB, o_bErr (error completion) turns on and the processing of the FB is interrupted. In addition, the error code is stored in o_uErrId (error code). For the error code, refer to the list of error codes. (☞ Page 28 Error code) • Set the number of read points of the continuous logging data by 5000 points. • If the set value of the target channel is out of the range or if the operation mode is not the simultaneous conversion mode or the inter-module synchronization mode, o_bErr (error completion) turns on and the processing of the FB is interrupted. In addition, the error code is stored in o_uErrId (error code). For the error code, refer to the list of error codes. (☞ Page 28 Error code) • If the set value of the number of read points is out of the range, o_bErr (error completion) turns on and the processing of the FB is interrupted. In addition, the error code is stored in o_uErrId (error code). For the error code, refer to the list of error codes. (☞ Page 28 Error code)	
FB compilation method	Macro type	
FB operation	Pulse execution type (multiple scan execution type)	
Timing chart of I/O signals	■When the operation is completed successfully (CH1) When the number of read points is set to 20000 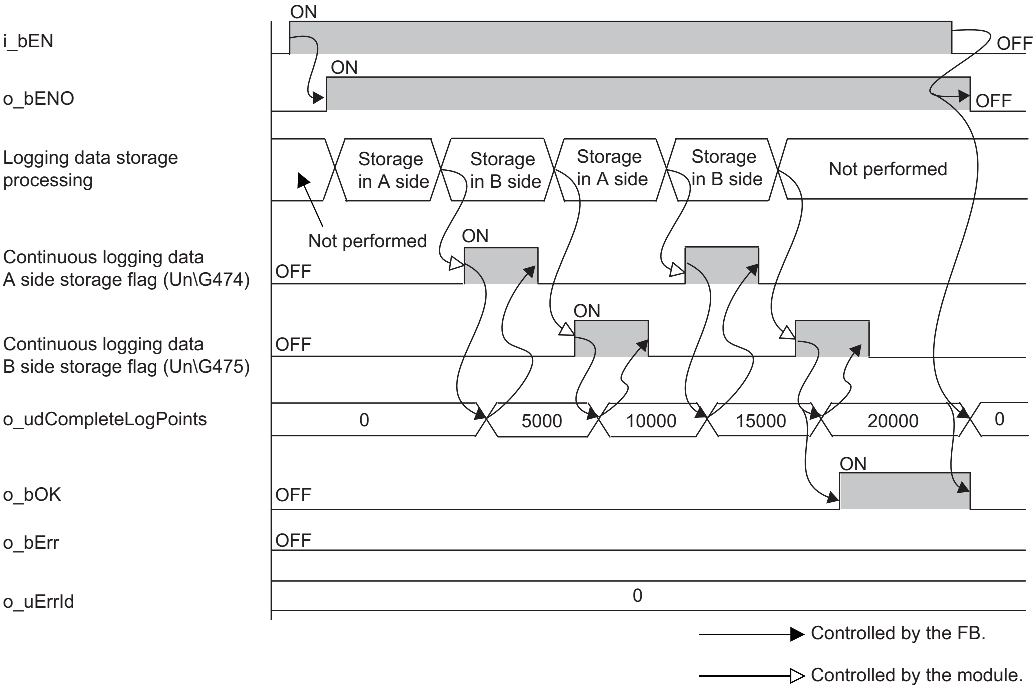 i_bEN ON OFF o_bENO ON OFF Logging data storage processing Storage in A side Storage in B side Storage in A side Storage in B side Not performed Not performed Continuous logging data A side storage flag (Un\G474) ON OFF Continuous logging data B side storage flag (Un\G475) ON OFF o_udCompleteLogPoints 0 5000 10000 15000 20000 0 o_bOK OFF ON o_bErr OFF o_uErrId 0 Controlled by the FB. Controlled by the module. The number of logging data points increases by 5000 every time the data is transferred to the file register.	

Item	Description
Timing chart of I/O signals	■Error completion 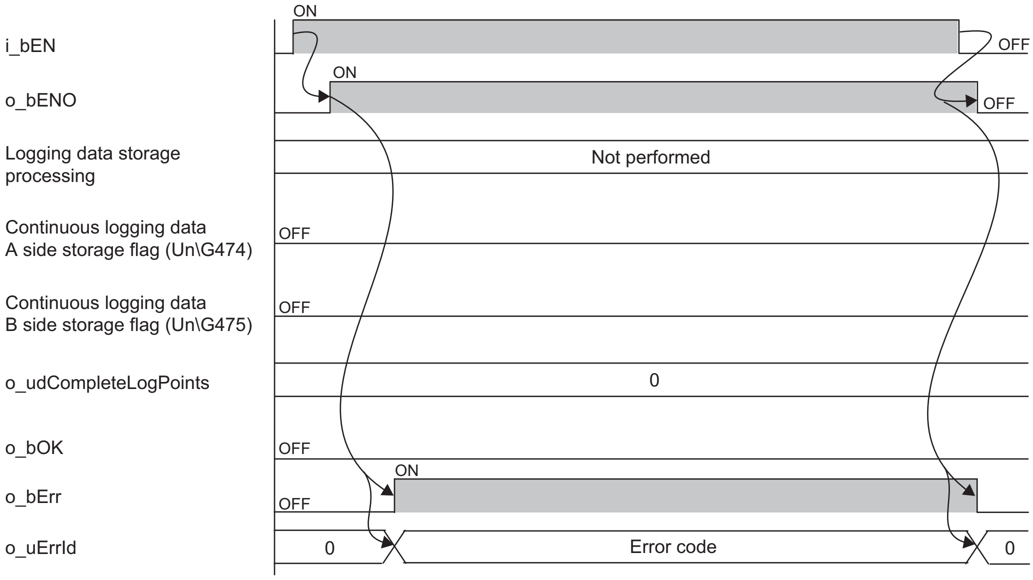 ON i_bEN OFF ON o_bENO OFF Logging data storage processing Not performed Continuous logging data A side storage flag (Un\G474) OFF Continuous logging data B side storage flag (Un\G475) OFF o_udCompleteLogPoints 0 o_bOK OFF ON o_bErr OFF o_uErrId 0 Error code 0
Restrictions and precautions	• This FB does not include the error recovery processing. Prepare the error recovery processing separately to suit the user's system and the expected operation. • To use more than one of this FB, set the start address and the number of read points not to overlap file register areas. • This FB uses the long index register LZ0. When using an interrupt program, do not use the corresponding index register. • The FB requires the configuration of the ladder for every input label. • When saving of the logging data is attempted to the file register areas other than the ones reserved by the file register setting of the CPU parameters, a CPU error (2820H: Device/label/buffer memory specification incorrect) occurs. Set the start address and the number of read points so that the logging data is saved in the file register areas. • Use this FB in a program that is to be executed periodically, such as a scan execution type program and a fixed scan execution type program. In addition, the program must be configured so that the execution interval of this FB satisfies the following condition. If the execution interval does not satisfy the condition, both of Continuous logging data A side storage flag and Continuous logging data B side storage flag may turn on, resulting in error completion of the FB. ■Condition $\text{Execution interval (μs) of the FB} \leq 5000\text{ (points)} \times \text{CH□ Logging cycle monitor value (μs)} - 5000\text{ (μs)}$ • Putting an analog-digital converter module into operation requires the input range to be set according to the connected devices and the system in use. Set up the module parameters of GX Works3 according to the application. For how to set up the module parameters, refer to the user's manual (Application) of the analog-digital converter module used.

Error code

Error code	Description	Action
100H	The target channel is set out of the range. Set the target channel within the range of 1 to 4.	Review and correct the setting and then execute the FB again.
104H	The number of read points is set out of the range. Set the number of read points within the range of 1 to 2000.	Review and correct the setting and then execute the FB again.
207H	The operation mode is not the simultaneous conversion mode or the inter-module synchronization mode. Change the operation mode to the simultaneous conversion mode or inter-module synchronization mode.	Change the operation mode to the simultaneous conversion mode or inter-module synchronization mode, and then execute the FB again.
209H	Both of Continuous logging data A side storage flag and Continuous logging data B side storage flag turned on. Create a program where the execution interval of the FB satisfies the condition described in Restrictions and precautions.	Review and correct the program and then execute the FB again.

2.8 M+Model_SetHighSpeedContinuousLoggingParam

Name

The module names of the FB are based on the module used and are as follows.

■R60ADH4

M+R60ADH_SetHighSpeedContinuousLoggingParam

Overview

Item	Description
Functional overview	Sets the parameters of the high speed continuous logging function.
Symbol	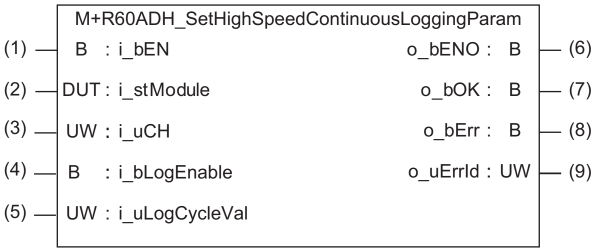 M+R60ADH_SetHighSpeedContinuousLoggingParam (1) B : i_bEN (2) DUT : i_stModule (3) UW : i_uCH (4) B : i_bLogEnable (5) UW : i_uLogCycleVal o_bENO : B (6) o_bOK : B (7) o_bErr : B (8) o_uErrId : UW (9)

Labels to use

■Input labels

No.	Variable name	Name	Data type	Scope	Description
(1)	i_bEN	Execution command	Bit	On or off	On: The FB is activated. Off: The FB is not activated.
(2)	i_stModule	Module label	Structure	The scope differs depending on the module label.	Specifies a module label of the analog-digital converter module.
(3)	i_uCH	Target channel	Word [unsigned]	1 to 4	Specifies a channel number.
(4)	i_bLogEnable	Logging enable/ disable setting	Bit	On or off	On: Sets high speed continuous logging as the logging function. Off: Disables the logging function.
(5)	i_uLogCycleVal	High speed continuous logging cycle setting value	Word [unsigned]	1 to 1000	Sets the interval of cycles at which data is stored.

■Output labels

No.	Variable name	Name	Data type	Default value	Description
(6)	o_bENO	Execution status	Bit	Off	On: The execution command is on. Off: The execution command is off.
(7)	o_bOK	Normal completion	Bit	Off	The on state indicates that the setting of the high speed continuous logging function parameters is completed.
(8)	o_bErr	Error completion	Bit	Off	The on state indicates that an error has occurred in the FB.
(9)	o_uErrId	Error code	Word [unsigned]	0	The error code of an error occurred in the FB is stored.

FB details

Item	Description	
Relevant devices	Relevant modules	R60ADH4 (firmware version of "04" or later)
	Relevant CPU modules	MELSEC iQ-R series CPU modules
	Relevant engineering tool	GX Works3
Language to use	Ladder diagram	
Number of basic steps	78 steps The number of steps of the FB embedded in a program depends on the CPU module used, the input/output definitions, and the options setting of GX Works3. For the options setting of GX Works3, refer to the GX Works3 Operating Manual.	
Functional description	• Turning on i_bEN (execution command) sets the parameters of the high speed continuous logging function. • This FB works for only one shot as i_bEN (execution command) turns on. • The set value is enabled by turning on and off 'Operating condition setting request' (Yn9) or executing the operating condition setting request operation FB (M+Model_RequestSetting). • This FB can be used only when the operation mode is set to the normal mode (high speed: 1µs/CH). • If the operation mode is not the normal mode (high speed: 1µs/CH), o_bErr (error completion) turns on and the processing of the FB is interrupted. In addition, the error code is stored in o_uErrId (error code). For the error code, refer to the list of error codes. (☞ Page 31 Error code) • If the set value of the target channel is out of the range, o_bErr (error completion) turns on and the processing of the FB is interrupted. In addition, the error code is stored in o_uErrId (error code). For the error code, refer to the list of error codes. (☞ Page 31 Error code) • If a setting value other than 1 to 1000 is set as the high speed continuous logging cycle setting value, o_bErr (error completion) turns on and the processing of the FB is interrupted. In addition, the error code is stored in o_uErrId (error code). For the error code, refer to the list of error codes. (☞ Page 31 Error code)	
FB compilation method	Macro type	
FB operation	Pulse execution type (single scan execution type)	
Timing chart of I/O signals	■When the operation is completed successfully 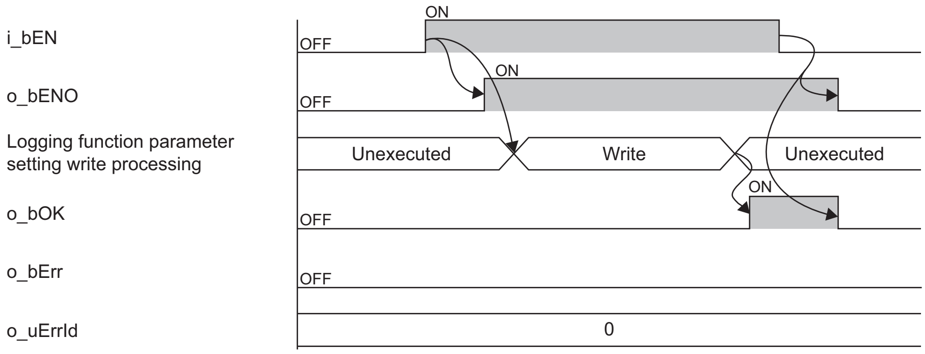 i_bEN o_bENO Logging function parameter setting write processing o_bOK o_bErr o_uErrId ON OFF Unexecuted Write 0 ■When the operation is completed with an error 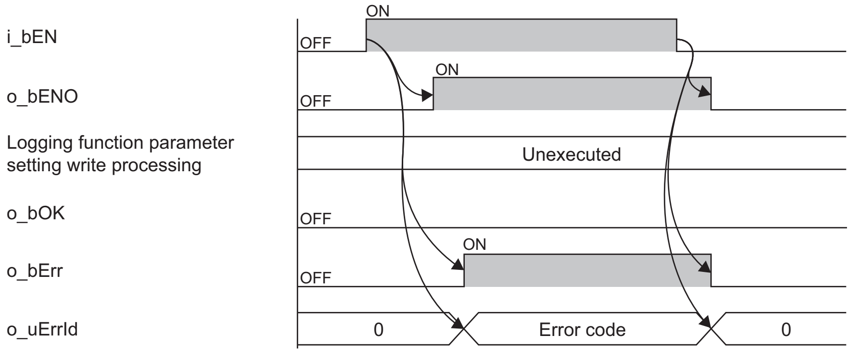 i_bEN o_bENO Logging function parameter setting write processing o_bOK o_bErr o_uErrId ON OFF Unexecuted 0 Error code	
Restrictions and precautions	• This FB does not include the error recovery processing. Prepare the error recovery processing separately to suit the user's system and the expected operation. • The FB cannot be used in an interrupt program. • Using the FB in a program that is to be executed only once, such as a subroutine program or a FOR-NEXT loop, has a problem that i_bEN (execution command) can no longer be turned off and normal operation is not possible; Always use the FB in a program that is capable of turning off the execution command. • The FB requires the configuration of the ladder for every input label. • If the parameters are set by means of the module parameters of GX Works3, this FB is not required. • Putting an analog-digital converter module into operation requires the input range to be set according to the connected devices and the system in use. Set up the module parameters of GX Works3 according to the application. For how to set up the module parameters, refer to the user's manual (Application) of the analog-digital converter module used.	

Error code

Error code	Description	Action
100H	The target channel is set out of the range. Set the target channel within the range of 1 to 4.	Review and correct the setting and then execute the FB again.
105H	The high speed continuous logging cycle setting value is set out of the range. Set a value of 1 to 1000 as the high speed continuous logging cycle setting value.	Review and correct the setting and then execute the FB again.
210H	The operation mode is set to a mode other than normal mode (high speed: 1μs/CH). Change the operation mode to the normal mode (high speed: 1μs/CH).	Change the operation mode to the normal mode (high speed: 1μs/CH) and then execute the FB again.

2.9 M+Model_HighSpeedContinuousLoggingRequest

Name

The module names of the FB are based on the module used and are as follows.

■R60ADH4

M+R60ADH_HighSpeedContinuousLoggingRequest

Overview

Item	Description
Functional overview	Starts/stops the high speed continuous logging.
Symbol	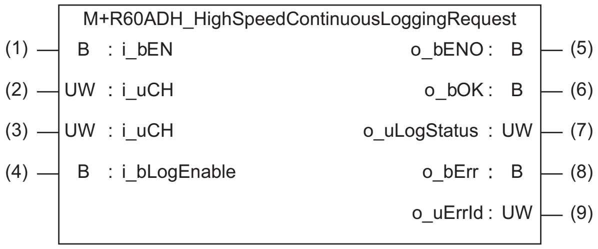 M+R60ADH_HighSpeedContinuousLoggingRequest (1) B : i_bEN (2) UW : i_uCH (3) UW : i_uCH (4) B : i_bLogEnable o_bENO : B (5) o_bOK : B (6) o_uLogStatus : UW (7) o_bErr : B (8) o_uErrId : UW (9)

Labels to use

■Input labels

No.	Variable name	Name	Data type	Scope	Description
(1)	i_bEN	Execution command	Bit	On or off	On: The FB is activated. Off: The FB is not activated.
(2)	i_stModule	Module label	Structure	The scope differs depending on the module label.	Specifies a module label of the analog-digital converter module.
(3)	i_uCH	Target channel	Word [unsigned]	1 to 4	Specifies a channel number.
(4)	i_bLogEnable	High speed continuous logging start/stop request	Bit	Off: Stop On: Start	Off: The high speed continuous logging is stopped. On: The high speed continuous logging is started.

■Output labels

No.	Variable name	Name	Data type	Default value	Description
(5)	o_bENO	Execution status	Bit	Off	On: The execution command is on. Off: The execution command is off.
(6)	o_bOK	Normal completion	Bit	Off	The on state indicates that the high speed continuous logging start or stop request is completed.
(7)	o_uLogStatus	High speed continuous logging status monitor	Word [unsigned]	0	Indicates the status of the high speed continuous logging. 0: High speed continuous logging disable status 1: High speed continuous logging start request waiting 2: High speed continuous logging in process
(8)	o_bErr	Error completion	Bit	Off	The on state indicates that an error has occurred in the FB.
(9)	o_uErrId	Error code	Word [unsigned]	0	The error code of an error occurred in the FB is stored.

FB details

Item	Description	
Relevant devices	Relevant modules	R60ADH4 (firmware version of "04" or later)
	Relevant CPU modules	MELSEC iQ-R series CPU modules
	Relevant engineering tool	GX Works3
Language to use	Ladder diagram	
Number of basic steps	84 steps The number of steps of the FB embedded in a program depends on the CPU module used, the input/output definitions, and the options setting of GX Works3. For the options setting of GX Works3, refer to the GX Works3 Operating Manual.	
Functional description	• As i_bEN (execution command) turns on, the high speed continuous logging start/stop request is written to the buffer memory. • As i_bEN (execution command) turns on, this FB outputs the value of a buffer memory area, CH□ High speed continuous logging status monitor. • After i_bEN (execution command) turns on, turning i_bLogEnable (high speed continuous logging start/stop request) from off (stop) to on (start) starts the high speed continuous logging function. Turning i_bLogEnable (high speed continuous logging start/stop request) from on (start) to off (stop) stops the high speed continuous logging function. • When the operation mode is the normal mode (high speed: 1μs/CH), the high speed continuous logging start/stop request is executed. • If the operation mode is not the normal mode (high speed: 1μs/CH), o_bErr (error completion) turns on and the processing of the FB is interrupted. In addition, the error code is stored in o_uErrId (error code). For the error code, refer to the list of error codes. (☞ Page 34 Error code) • If the set value of the target channel is out of the range, o_bErr (error completion) turns on and the processing of the FB is interrupted. In addition, the error code is stored in o_uErrId (error code). For the error code, refer to the list of error codes. (☞ Page 34 Error code) • If the high speed continuous logging is in the high speed continuous logging disable status, o_bErr (error completion) turns on and the processing of the FB is interrupted. In addition, the error code is stored in o_uErrId (error code). For the error code, refer to the list of error codes. (☞ Page 34 Error code)	
FB compilation method	Macro type	
FB operation	Arbitrary execution type	
Timing chart of I/O signals	■When the operation is completed successfully 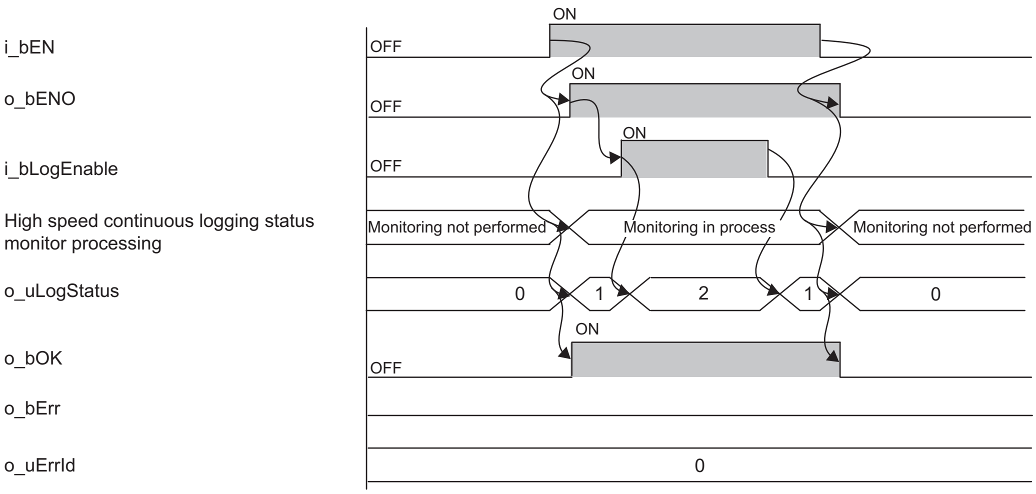 i_bEN o_bENO i_bLogEnable High speed continuous logging status monitor processing o_uLogStatus o_bOK o_bErr o_uErrId ON OFF Monitoring not performed Monitoring in process Monitoring not performed 0 1 2 1 0 0 ■When the operation is completed with an error 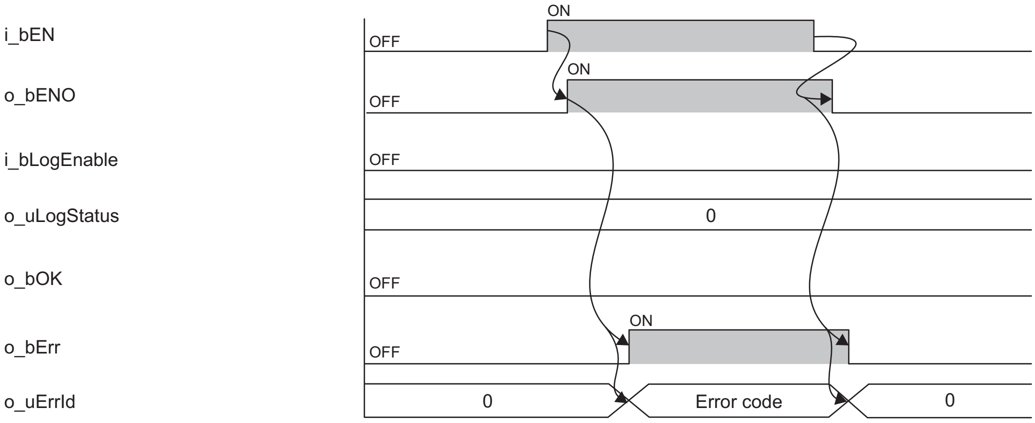 i_bEN o_bENO i_bLogEnable o_uLogStatus o_bOK o_bErr o_uErrId ON OFF 0 0 Error code 0	

Item	Description
Restrictions and precautions	• This FB does not include the error recovery processing. Prepare the error recovery processing separately to suit the user's system and the expected operation. • The FB cannot be used in an interrupt program. • Using the FB in a program that is to be executed only once, such as a subroutine program or a FOR-NEXT loop, has a problem that i_bEN (execution command) can no longer be turned off and normal operation is not possible; Always use the FB in a program that is capable of turning off the execution command. • The FB requires the configuration of the ladder for every input label. • Putting an analog-digital converter module into operation requires the input range to be set according to the connected devices and the system in use. Set up the module parameters of GX Works3 according to the application. For how to set up the module parameters, refer to the user's manual (Application) of the analog-digital converter module used.

Error code

Error code	Description	Action
100H	The target channel is set out of the range. Set the target channel within the range of 1 to 4.	Review and correct the setting and then execute the FB again.
210H	The operation mode is set to a mode other than normal mode (high speed: 1μs/CH). Change the operation mode to the normal mode (high speed: 1μs/CH).	Change the operation mode to the normal mode (high speed: 1μs/CH) and then execute the FB again.
211H	The high speed continuous logging is in the high speed continuous logging disable status. Check that the high speed continuous logging is not in the high speed continuous logging disable status.	Review and correct the setting and then execute the FB again.

2.10 M+Model_ReadHighSpeedContinuousLogging

Name

The module names of the FB are based on the module used and are as follows.

■R60ADH4

M+R60ADH_ReadHighSpeedContinuousLogging

Overview

Item	Description
Functional overview	Reads out the logging data collected by the high speed continuous logging function and stores the data in a specified file register.
Symbol	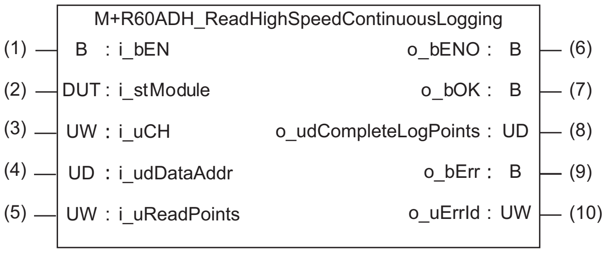 M+R60ADH_ReadHighSpeedContinuousLogging (1) B : i_bEN (2) DUT : i_stModule (3) UW : i_uCH (4) UD : i_udDataAddr (5) UW : i_uReadPoints o_bENO : B (6) o_bOK : B (7) o_udCompleteLogPoints : UD (8) o_bErr : B (9) o_uErrId : UW (10)

Labels to use

■Input labels

No.	Variable name	Name	Data type	Scope	Description
(1)	i_bEN	Execution command	Bit	On or off	On: The FB is activated. Off: The FB is not activated.
(2)	i_stModule	Module label	Structure	The scope differs depending on the module label.	Specifies a module label of the analog-digital converter module.
(3)	i_uCH	Target channel	Word [unsigned]	1 to 4	Specifies a channel number.
(4)	i_udDataAddr	File register start address	Double Word [unsigned]	Valid device range. The scope differs depending on the file register setting of CPU parameters.	Specifies the start address of the file register (ZR).
(5)	i_uReadPoints	Number of read points	Word [unsigned]	1 to 1000	Specifies the number of read points of the high speed continuous logging data by 10000 points. ■Example • When i_uReadPoints (number of read points) is 1, the number of read points is 10000. • When i_uReadPoints (number of read points) is 1000, the number of read points is 10000000.

■Output labels

No.	Variable name	Name	Data type	Default value	Description
(6)	o_bENO	Execution status	Bit	Off	On: The execution command is on. Off: The execution command is off.
(7)	o_bOK	Normal completion	Bit	Off	The on state indicates that the reading of the high speed continuous logging data is completed.
(8)	o_udCompleteLogPoints	Number of read completed logging data points	Double Word [unsigned]	0	Returns the number of read completed logging data points.
(9)	o_bErr	Error completion	Bit	Off	The on state indicates that an error has occurred in the FB.
(10)	o_uErrId	Error code	Word [unsigned]	0	The error code of an error occurred in the FB is stored.

FB details

Item	Description	
Relevant devices	Relevant modules	R60ADH4 (firmware version of "04" or later)
	Relevant CPU modules	MELSEC iQ-R series CPU modules
	Relevant engineering tool	GX Works3
Language to use	Ladder diagram	
Number of basic steps	252 steps The number of steps of the FB embedded in a program depends on the CPU module used, the input/output definitions, and the options setting of GX Works3. For the options setting of GX Works3, refer to the GX Works3 Operating Manual.	
Functional description	• Turning on i_bEN (execution command) reads out the high speed continuous logging data of a specified channel. • This FB turns on o_bENO (execution status) while i_bEN (execution command) is on. • When the operation mode is the normal mode (high speed: 1µs/CH), this FB reads out the high speed continuous logging data. • Logging data is continuously transferred into the file register of the CPU module in the storage order of the logging data (A side → B side → A side → ···). When the total of read logging data points reaches the value of i_uReadPoints (number of read points) × 10000 points, the data transfer ends and o_bOK (normal completion) turns on. • When both of High speed continuous logging data A side storage flag and High speed continuous logging data B side storage flag are on at the first execution of this FB, they are turned off and the high speed continuous logging data is read. • If both of High speed continuous logging data A side storage flag and High speed continuous logging data B side storage flag are turned on during the execution of this FB, o_bErr (error completion) turns on and the processing of the FB is interrupted. In addition, the error code is stored in o_uErrId (error code). For the error code, refer to the list of error codes. (☞ Page 38 Error code) • Set the number of read points of the high speed continuous logging data by 10000 points. • If the set value of the target channel is out of the range or if the operation mode is not the normal mode (high speed: 1µs/CH), o_bErr (error completion) turns on and the processing of the FB is interrupted. In addition, the error code is stored in o_uErrId (error code). For the error code, refer to the list of error codes. (☞ Page 38 Error code) • If the set value of the number of read points is out of the range, o_bErr (error completion) turns on and the processing of the FB is interrupted. In addition, the error code is stored in o_uErrId (error code). For the error code, refer to the list of error codes. (☞ Page 38 Error code)	
FB compilation method	Macro type	
FB operation	Pulse execution type (multiple scan execution type)	
Timing chart of I/O signals	■When the operation is completed successfully (CH1) When the number of read points is set to 40000 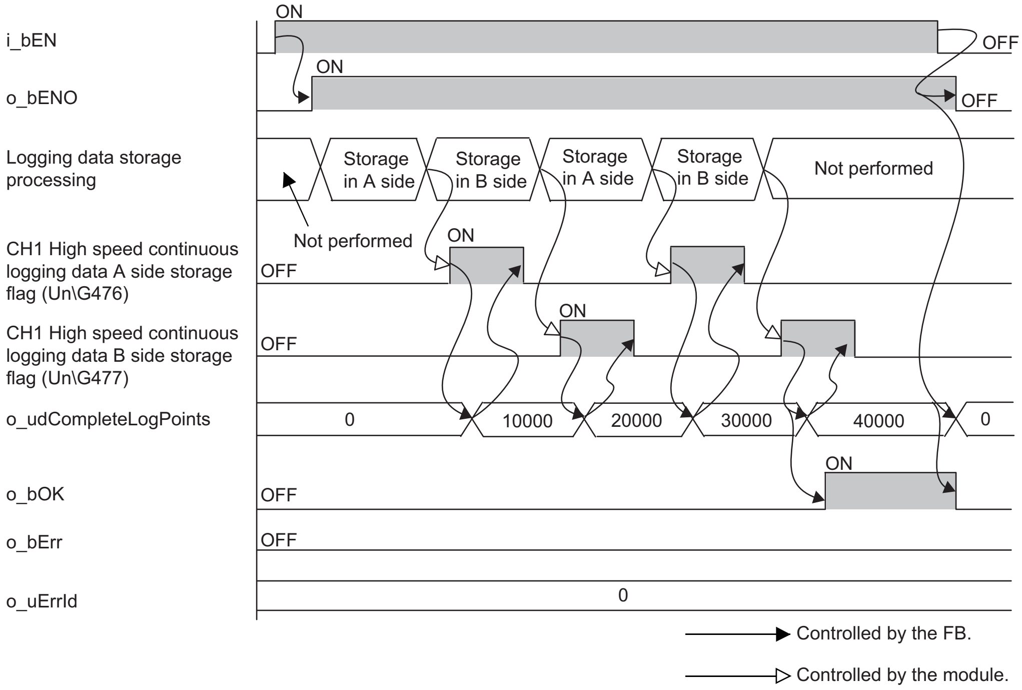 i_bEN o_bENO Logging data storage processing CH1 High speed continuous logging data A side storage flag (Un\G476) CH1 High speed continuous logging data B side storage flag (Un\G477) o_udCompleteLogPoints o_bOK o_bErr o_uErrId ON OFF Storage in A side Storage in B side Not performed 0 10000 20000 30000 40000 Controlled by the FB. Controlled by the module. The number of logging data points increases by 10000 every time the data is transferred to the file register.	

Item	Description
Timing chart of I/O signals	■Error completion 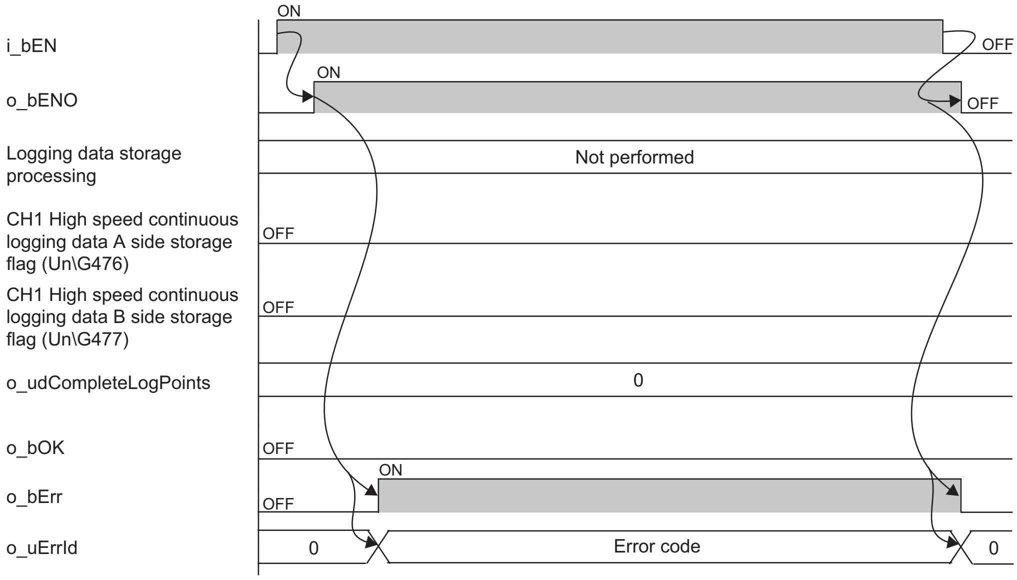 i_bEN ON OFF o_bENO ON OFF Logging data storage processing Not performed CH1 High speed continuous logging data A side storage flag (Un\G476) OFF CH1 High speed continuous logging data B side storage flag (Un\G477) OFF o_udCompleteLogPoints 0 o_bOK OFF o_bErr ON OFF o_uErrId 0 Error code 0
Restrictions and precautions	• This FB does not include the error recovery processing. Prepare the error recovery processing separately to suit the user's system and the expected operation. • To use more than one of this FB, set the start address and the number of read points not to overlap file register areas. • This FB uses the long index register LZ0. When using an interrupt program, do not use the corresponding index register. • The FB requires the configuration of the ladder for every input label. • When saving of the logging data is attempted to the file register areas other than the ones reserved by the file register setting of the CPU parameters, a CPU error (2820H: Device/label/buffer memory specification incorrect) occurs. Set the start address and the number of read points so that the logging data is saved in the file register areas. • Use this FB in a program that is to be executed periodically, such as a scan execution type program and a fixed scan execution type program. In addition, the program must be configured so that the execution interval of this FB satisfies the following condition. If the execution interval does not satisfy the condition, both of High speed continuous logging data A side storage flag and High speed continuous logging data B side storage flag may turn on, resulting in error completion of the FB. ■Condition Execution interval (μs) of the FB ≤ 10000 (points) × CH□ Logging cycle monitor value (μs) - 2000 (μs) • Putting an analog-digital converter module into operation requires the input range to be set according to the connected devices and the system in use. Set up the module parameters of GX Works3 according to the application. For how to set up the module parameters, refer to the user's manual (Application) of the analog-digital converter module used.

Error code

Error code	Description	Action
100H	The target channel is set out of the range. Set the target channel within the range of 1 to 4.	Review and correct the setting and then execute the FB again.
106H	The number of read points is set out of the range. Set the number of read points within the range of 1 to 1000.	Review and correct the setting and then execute the FB again.
210H	The operation mode is set to a mode other than normal mode (high speed: 1μs/CH). Change the operation mode to the normal mode (high speed: 1μs/CH).	Change the operation mode to the normal mode (high speed: 1μs/CH) and then execute the FB again.
212H	Both of High speed continuous logging data A side storage flag and High speed continuous logging data B side storage flag turned on. Create a program where the execution interval of the FB satisfies the condition described in Restrictions and precautions.	Review and correct the program and then execute the FB again.

2.11 M+Model_SetHighSpeedLoggingParam

Name

The module names of the FB are based on the module used and are as follows.

■R60ADH4

M+R60ADH_SetHighSpeedLoggingParam

Overview

Item	Description
Functional overview	Sets up the high speed logging function of a specified channel.
Symbol	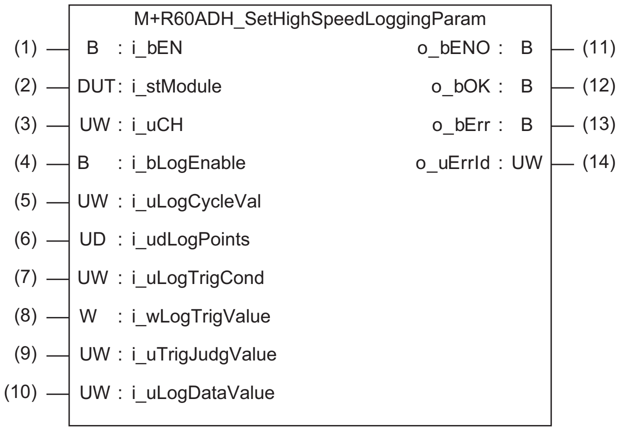

M+R60ADH_SetHighSpeedLoggingParam
(1) B : i_bEN
(2) DUT: i_stModule
(3) UW : i_uCH
(4) B : i_bLogEnable
(5) UW : i_uLogCycleVal
(6) UD : i_udLogPoints
(7) UW : i_uLogTrigCond
(8) W : i_wLogTrigValue
(9) UW : i_uTrigJudgValue
(10) UW : i_uLogDataValue
o_bENO : B (11)
o_bOK : B (12)
o_bErr : B (13)
o_uErrId : UW (14)

Labels to use

■Input labels

No.	Variable name	Name	Data type	Scope	Description
(1)	i_bEN	Execution command	Bit	On or off	On: The FB is activated. Off: The FB is not activated.
(2)	i_stModule	Module label	Structure	The scope differs depending on the module label.	Specifies a module label of the analog-digital converter module.
(3)	i_uCH	Target channel	Word [unsigned]	1 to 4	Specifies a channel number.
(4)	i_bLogEnable	Logging enable/disable setting	Bit	On or off	On: Sets high speed logging as the logging function. Off: Disables the logging function.
(5)	i_uLogCycleVal	Logging cycle setting value	Word [unsigned]	1 to 1000	Sets the interval of cycles at which data is stored.
(6)	i_udLogPoints	Number of post-trigger logging points	Double Word [unsigned]	1 to 90000	Specifies the number of data to be logged after a hold trigger occurs by one point.
(7)	i_uLogTrigCond	Level trigger condition setting	Word [unsigned]	0: Disable 1: Level trigger (rise) 2: Level trigger (fall) 3: Level trigger (rise and fall)	Sets the condition in which a level trigger is to be used. Set 0 if using no lever trigger.
(8)	i_wLogTrigValue	Trigger setting value	Word [signed]	-32768 to 32767	Sets the level at which a level trigger is generated.
(9)	i_uTrigJudgValue	Trigger judgment count setting value	Word [unsigned]	1 to 10	Sets up the count to judge a level trigger.
(10)	i_uLogDataValue	Logging data points setting	Word [unsigned]	0 to 900	Specifies the number of the logging data points of the channel to which the logging function is to be used by 100 points. ■Example • When i_uLogDataValue (logging data points setting) is 1, the number of read points is 100. • When i_uLogDataValue (logging data points setting) is 900, the number of read points is 90000.

■Output labels

No.	Variable name	Name	Data type	Default value	Description
(11)	o_bENO	Execution status	Bit	Off	On: The execution command is on. Off: The execution command is off.
(12)	o_bOK	Normal completion	Bit	Off	The on state indicates that the setting of the logging function parameters is completed.
(13)	o_bErr	Error completion	Bit	Off	The on state indicates that an error has occurred in the FB.
(14)	o_uErrId	Error code	Word [unsigned]	0	The error code of an error occurred in the FB is stored.

FB details

Item	Description	
Relevant devices	Relevant modules	R60ADH4
	Relevant CPU modules	MELSEC iQ-R series CPU modules
	Relevant engineering tool	GX Works3
Language to use	Ladder diagram	
Number of basic steps	114 steps The number of steps of the FB embedded in a program depends on the CPU module used, the input/output definitions, and the options setting of GX Works3. For the options setting of GX Works3, refer to the GX Works3 Operating Manual.	

Item	Description
Functional description	• Turning on i_bEN (execution command) sets up the high speed logging function of a specified channel. • This FB works for only one shot as i_bEN (execution command) turns on. • The set value is enabled by turning on and off 'Operating condition setting request' (Yn9) or executing the operating condition setting request operation FB (M+Model_RequestSetting). • If the set value of the target channel is out of the range or if the operation mode is not the normal mode (high speed: 1μs/CH) in the R60ADH4, o_bErr (error completion) turns on and the processing of the FB is interrupted. In addition, the error code is stored in o_uErrId (error code). For the error code, refer to the list of error codes. (☞ Page 41 Error code)
FB compilation method	Macro type
FB operation	Pulse execution type (single scan execution type)
Timing chart of I/O signals	■When the operation is completed successfully 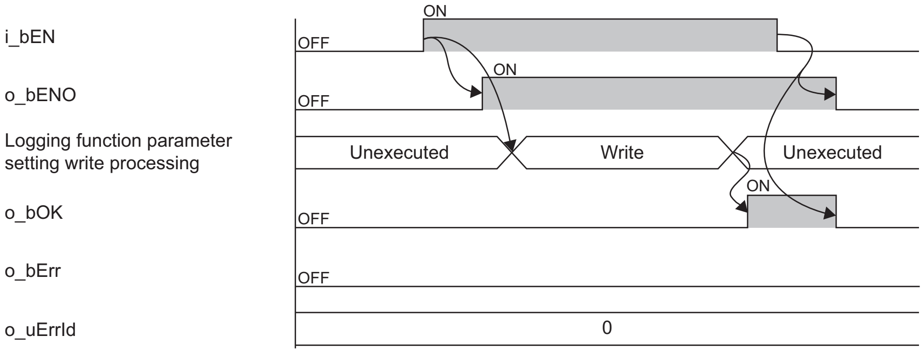 i_bEN o_bENO Logging function parameter setting write processing o_bOK o_bErr o_uErrId ON OFF ON OFF Unexecuted Write Unexecuted ON OFF OFF 0 ■When the operation is completed with an error 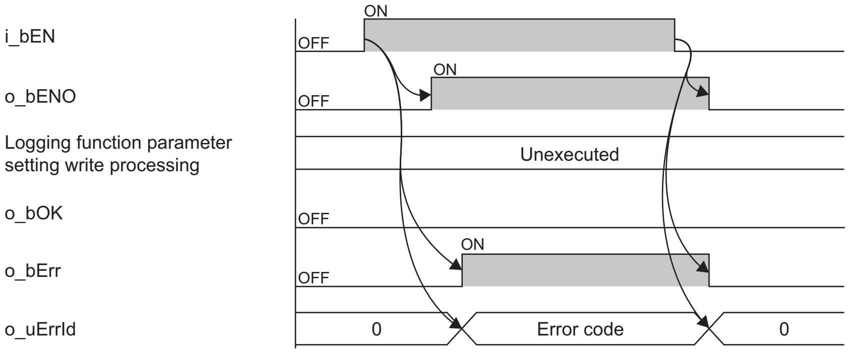 i_bEN o_bENO Logging function parameter setting write processing o_bOK o_bErr o_uErrId ON OFF ON OFF Unexecuted OFF ON OFF 0 Error code 0
Restrictions and precautions	• This FB does not include the error recovery processing. Prepare the error recovery processing separately to suit the user's system and the expected operation. • The FB cannot be used in an interrupt program. • Using the FB in a program that is to be executed only once, such as a subroutine program or a FOR-NEXT loop, has a problem that i_bEN (execution command) can no longer be turned off and normal operation is not possible; Always use the FB in a program that is capable of turning off the execution command. • To use more than one of this FB, care must be taken to avoid duplication of the target channel. • The FB requires the configuration of the ladder for every input label. • If the parameters are set by means of the module parameters of GX Works3, this FB is not required. • Putting an analog-digital converter module into operation requires the input range to be set according to the connected devices and the system in use. Set up the module parameters of GX Works3 according to the application. For how to set up the module parameters, refer to the user's manual (Application) of the analog-digital converter module used.

Error code

Error code	Description	Action
100H	The target channel is set out of the range. Set the target channel within the range of 1 to 4.	Review and correct the setting and then execute the FB again.
210H	The operation mode is not the normal mode (high speed: 1μs/CH). Change the operation mode to the normal mode (high speed: 1μs/CH).	Change the operation mode to the normal mode (high speed: 1μs/CH) and then execute the FB again.

2.12 M+Model_SaveHighSpeedLogging

Name

The module names of the FB are based on the module used and are as follows.

■R60ADH4

M+R60ADH_SaveHighSpeedLogging

Overview

Item	Description
Functional overview	Reads out the logging data collected by the high speed logging function and stores the data in a file.
Symbol	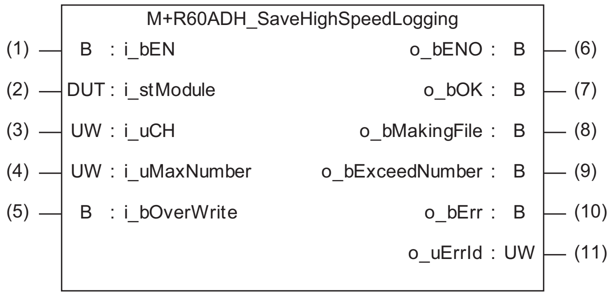 M+R60ADH_SaveHighSpeedLogging (1) B : i_bEN (2) DUT : i_stModule (3) UW : i_uCH (4) UW : i_uMaxNumber (5) B : i_bOverWrite o_bENO : B (6) o_bOK : B (7) o_bMakingFile : B (8) o_bExceedNumber : B (9) o_bErr : B (10) o_uErrId : UW (11)

Labels to use

■Input labels

No.	Variable name	Name	Data type	Scope	Description
(1)	i_bEN	Execution command	Bit	On or off	On: The FB is activated. Off: The FB is not activated.
(2)	i_stModule	Module label	Structure	The scope differs depending on the module label.	Specifies a module label of the analog-digital converter module.
(3)	i_uCH	Target channel	Word [unsigned]	1 to 4	Specifies a channel number.
(4)	i_uMaxNumber	Maximum number of save files	Word [unsigned]	1 to 999	Specifies the maximum number of CSV files that this FB saves.
(5)	i_bOverWrite	Overwrite preservation order	Bit	On or off	Specify whether or not to overwrite the CSV files having smaller consecutive numbers when the number of CSV files that this FB has saved reaches the maximum number of save files. If the setting is off, the save processing of logging data stops.

■Output labels

No.	Variable name	Name	Data type	Default value	Description
(6)	o_bENO	Execution status	Bit	Off	On: The execution command is on. Off: The execution command is off.
(7)	o_bOK	Normal completion	Bit	Off	The on state indicates that the file save is complete. This label turns off as high speed logging resumes.
(8)	o_bMakingFile	Under file making	Bit	Off	The on state indicates that files are being created.
(9)	o_bExceedNumber	Maximum number reach flag	Bit	Off	The on state indicates that the number of CSV files that this FB has saved has reached the maximum number of save files.
(10)	o_bErr	Error completion	Bit	Off	The on state indicates that an error has occurred in the FB.
(11)	o_uErrId	Error code	Word [unsigned]	0	The error code of an error occurred in the FB is stored.

FB details

Item	Description	
Relevant devices	Relevant modules	R60ADH4
	Relevant CPU modules	MELSEC iQ-R series CPU modules
	Relevant engineering tool	GX Works3
Language to use	Ladder diagram	
Number of basic steps	1209 steps The number of steps of the FB embedded in a program depends on the CPU module used, the input/output definitions, and the options setting of GX Works3. For the options setting of GX Works3, refer to the GX Works3 Operating Manual.	
Functional description	• As i_bEN (execution command) turns on and the logging hold flag turns on, the FB sorts the logging data, the number of which is equal to the number of logging points, in a chronological order from the head pointer, and saves the data along with the trigger generation information in the SD memory card, inserted into the CPU module, in a CSV format. • Provided that i_bEN (execution command) is on, this FB starts the save processing of logging data every time the logging hold flag turns on. • It takes multiple scans to complete the save processing of logging data. Check o_bOK (normal completion) to see that the processing is complete. • When this FB saves data in an SD memory card, the file name is given as follows: "AD" + "Middle two digits of the four digits representing the start I/O number of the analog-digital converter module" + "Target channel" + "Consecutive number" + ".CSV". The maximum number of consecutive number varies with i_uMaxNumber (maximum number of save files). Turning off i_bEN (execution command) results in the consecutive number being reset, and thereafter a consecutive number is given from 1 again. Suppose that the start I/O number of the analog-digital converter module is H0450, the target channel is 3, i_uMaxNumber (maximum number of save files) is 30, and the number of file creation by this FB is 6th. For the R60ADH4, the file name is "AD453006.CSV". • When this FB creates a CSV file in an SD memory card, a file of the same name, if already exists in the SD memory card, is replaced with the newly created file. • If i_bOverWrite (overwrite save command) is on and the number of files that this FB has saved in an SD memory card exceeds i_uMaxNumber (maximum number of save files), the consecutive number returns back to 1 and the save processing of logging data continues. • If i_bOverWrite (overwrite save command) is off and the number of files that this FB has saved in an SD memory card reaches i_uMaxNumber (maximum number of save files), the save processing of logging data stops. • If the number of files that this FB has saved in an SD memory card reaches i_uMaxNumber (maximum number of save files), o_bExceedNumber (maximum number reach flag) turns on regardless of the on or off state of i_bOverWrite (overwrite save command). • If an incorrect value is set in i_uCH (target channel) or i_uMaxNumber (maximum number of save files), o_bErr (error completion) turns on and the processing of the FB is interrupted. In addition, the error code is stored in o_uErrId (error code). • A CPU error occurs in the following cases: when this FB has been executed with no SD memory card inserted into the CPU module; when the inserted SD memory card has no sufficient free space; or when the number of files stored is exceeded. In the event of an error, if the CPU module is in a stop error state, o_bErr (error completion) and o_uErrId (error code) are not updated. In the event of an error, if the CPU module is in a continuation error state, o_bErr (error completion) turns on and the error code is stored in o_uErrId (error code). For the capacity of SD memory cards and the number of files stored, refer to the MELSEC iQ-R Module Configuration Manual. The operating status (continue or stop) of the CPU module at the time of the failure of access to the SD memory card can be set with the parameter. • For the format of CSV files that this FB creates, refer to CSV File Output Format of the FB for Saving Logging Data (☞ Page 73 CSV File Output Format of the FB for Saving Logging Data).	
FB compilation method	Macro type	
FB operation	Arbitrary execution type	

Item	Description
Timing chart of I/O signals	■When the operation is completed successfully 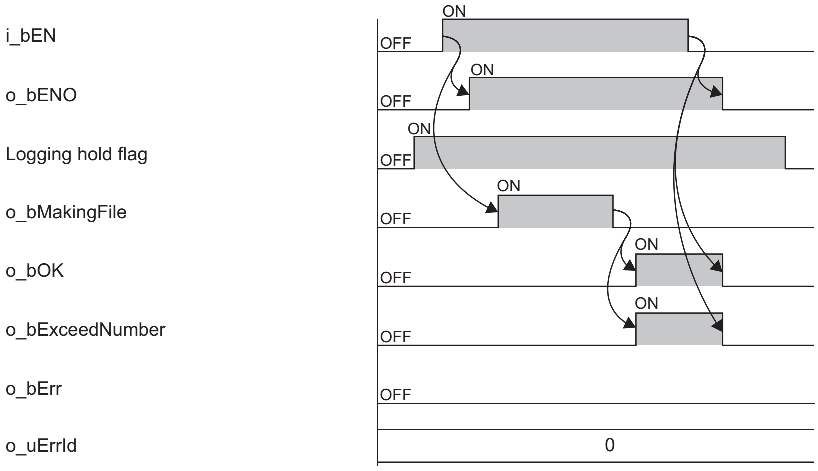 i_bEN o_bENO Logging hold flag o_bMakingFile o_bOK o_bExceedNumber o_bErr o_uErrId ON OFF 0 ■When the operation is completed with an error 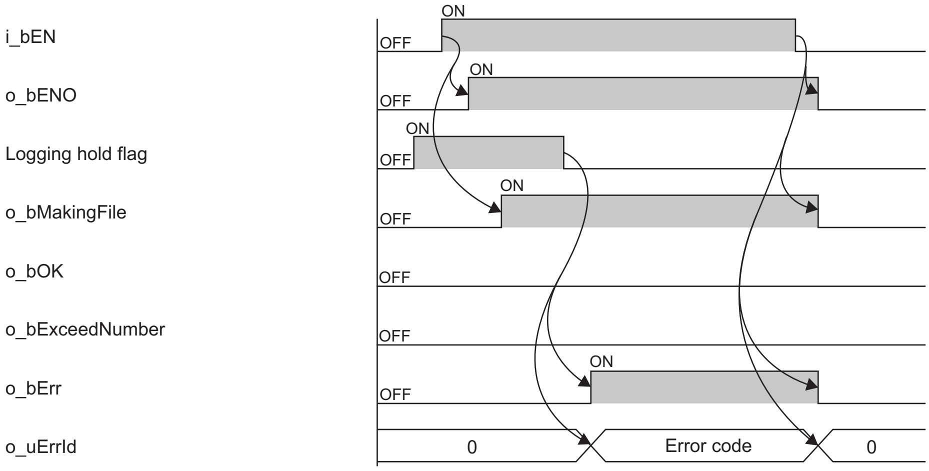 i_bEN o_bENO Logging hold flag o_bMakingFile o_bOK o_bExceedNumber o_bErr o_uErrId ON OFF 0 Error code 0
Restrictions and precautions	• This FB does not include the error recovery processing. Prepare the error recovery processing separately to suit the user's system and the expected operation. • The FB cannot be used in an interrupt program. • Using the FB in a program that is to be executed only once, such as a subroutine program or a FOR-NEXT loop, has a problem that i_bEN (execution command) can no longer be turned off and normal operation is not possible; Always use the FB in a program that is capable of turning off the execution command. • This FB cannot save logging data in a medium other than an SD memory card. • This FB makes use of the SP.FWRITE instruction, and thus if an error occurs in the execution of the SP.FWRITE instruction, a CPU error occurs. • To use more than one of this FB, create an interlock to avoid simultaneous execution. When saving logging data of channel 1 and channel 2, first check that o_bOK (normal completion) of the FB on channel 1 is on, and turn on i_bEN (execution command) of the FB on channel 2. • If SM606 (SD memory card forced disable instruction) is on at the time of saving logging data, the SP.FWRITE instruction is not processed, resulting in the logging data not being saved. In this case, o_bErr (error completion) turns on and the error code is stored in o_uErrId (error code). • The FB requires the configuration of the ladder for every input label. • Set i_uMaxNumber (maximum number of save files) with consideration for the capacity of the SD memory card and the number of files stored. If the capacity of the SD memory card or the number of files stored is exceeded as a result of execution of this FB, a CPU error occurs. For the capacity of SD memory cards and the number of files stored, refer to the MELSEC iQ-R Module Configuration Manual. • Putting an analog-digital converter module into operation requires the input range to be set according to the connected devices and the system in use. Set up the module parameters of GX Works3 according to the application. For how to set up the module parameters, refer to the user's manual (Application) of the analog-digital converter module used.

Error code

Error code	Description	Action
100H	The target channel is set out of the range. Set the target channel within the range of 1 to 4.	Review and correct the setting and then execute the FB again.
101H	The maximum number of save files is set out of the range. The maximum number of save files is set out of the range of 1 to 999.	Review and correct the setting and then execute the FB again.
200H	The processing is interrupted because the logging hold flag turns off while logging data is being saved. The partially created CSV file is saved in the SD memory card.	—
201H	An access to the SD memory card has failed because SM606 (SD memory card forced disable instruction) is turned on. While logging data is being saved, turning on SM606 (SD memory card forced disable instruction) results in the partially created CSV file being saved in the SD memory card.	Turn off SM606 and check that SM607 (SD memory card forced stop status flag) is turned off, then execute the FB again.
202H	Execution of this FB has been attempted without inserting an SD memory card into the CPU module.	Insert an SD memory card for saving the target CSV files into the CPU module, and then execute the FB again.
203H	An access to the SD memory card has failed because SM600 (Memory card available flag) is off (unavailable).	Make the SD memory card an available state, and then execute the FB again.
204H	The SD memory card is frequently accessed from programs in addition to this FB, and a timeout has occurred in the logging data write processing.	Reduce the frequency of the access to the SD memory card.
205H	Because SM601 (Memory card protect flag) is on (write inhibited), data cannot be written to the SD memory card.	Turn off (write enabled) the protect switch on the SD memory card, check that SM601 is off, and execute the FB again.
210H	The operation mode is not the normal mode (high speed: 1μs/CH). Change the operation mode to the normal mode (high speed: 1μs/CH).	Change the operation mode to the normal mode (high speed: 1μs/CH) and then execute the FB again.
Error codes other than the above	Error codes related to the SP.FWRITE instruction executed when logging data is written to an SD memory card	For details on the error code that has occurred, refer to the description of the SP.FWRITE instruction. (📖 MELSEC iQ-R Programming Manual (Instructions, Standard Functions/Function Blocks))

2.13 M+Model_RefreshHARTDeviceInfo

Name

The module names of the FB are based on the module used and are as follows.

■R60ADI8-HA

M+R60ADHART_RefreshHARTDeviceInfo

Overview

Item	Description
Functional overview	Refreshes HART device information.
Symbol	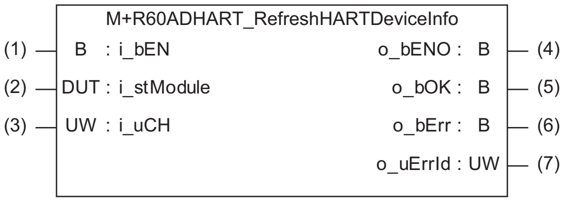 M+R60ADHART_RefreshHARTDeviceInfo (1) B : i_bEN (2) DUT : i_stModule (3) UW : i_uCH o_bENO : B (4) o_bOK : B (5) o_bErr : B (6) o_uErrId : UW (7)

Labels to use

■Input labels

No.	Variable name	Name	Data type	Scope	Description
(1)	i_bEN	Execution command	Bit	On or off	On: The FB is activated. Off: The FB is not activated.
(2)	i_stModule	Module label	Structure	The scope differs depending on the module label.	Specifies a module label of the analog-digital converter module.
(3)	i_uCH	Target channel	Word [unsigned]	1 to 8	Specifies a channel number.

■Output labels

No.	Variable name	Name	Data type	Default value	Description
(4)	o_bENO	Execution status	Bit	Off	On: The execution command is on. Off: The execution command is off.
(5)	o_bOK	Normal completion	Bit	Off	The on state indicates that refresh of HART device information is complete.
(6)	o_bErr	Error completion	Bit	Off	The on state indicates that an error has occurred in the FB.
(7)	o_uErrId	Error code	Word [unsigned]	0	The error code of an error occurred in the FB is stored.

FB details

Item	Description	
Relevant devices	Relevant modules	R60ADI8-HA
	Relevant CPU modules	MELSEC iQ-R series CPU modules
	Relevant engineering tool	GX Works3
Language to use	Ladder diagram	
Number of basic steps	113 steps The number of steps of the FB embedded in a program depends on the CPU module used, the input/output definitions, and the options setting of GX Works3. For the options setting of GX Works3, refer to the GX Works3 Operating Manual.	
Functional description	• As i_bEN (execution command) turns on, refresh of HART device information in a specified channel is requested. • This FB works for only one shot as i_bEN (execution command) turns on. • If the set value of i_uCH (target channel) is out of the range, or a request condition is not satisfied, o_bErr (error completion) turns on and the processing of the FB is interrupted. In addition, the error code is stored in o_uErrId (error code). For the error code, refer to the list of error codes. (☞ Page 48 Error code)	
FB compilation method	Macro type	
FB operation	Arbitrary execution type	
Timing chart of I/O signals	■When the operation is completed successfully 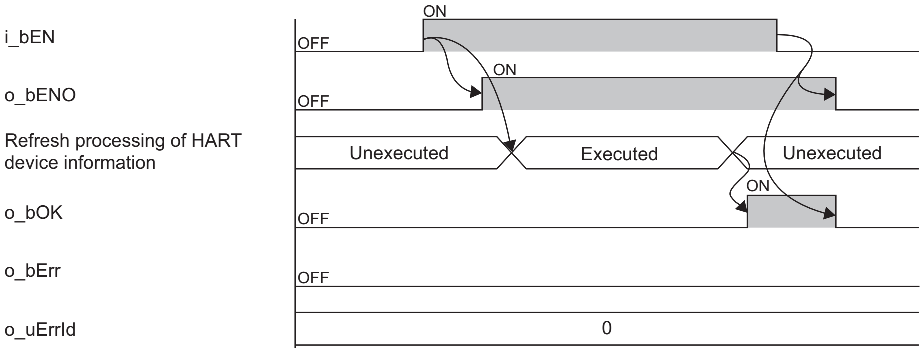 i_bEN o_bENO Refresh processing of HART device information o_bOK o_bErr o_uErrId ON OFF ON OFF Unexecuted Executed Unexecuted ON OFF OFF 0 ■When the operation is completed with an error 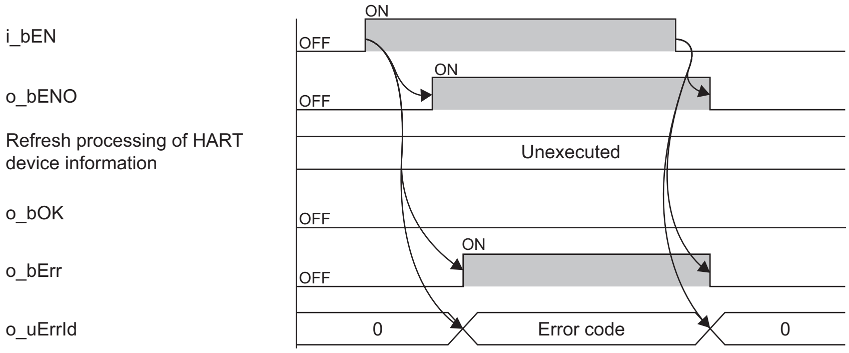 i_bEN o_bENO Refresh processing of HART device information o_bOK o_bErr o_uErrId ON OFF ON OFF Unexecuted OFF ON OFF 0 Error code 0	
Restrictions and precautions	• This FB does not include the error recovery processing. Prepare the error recovery processing separately to suit the user's system and the expected operation. • The FB cannot be used in an interrupt program. • Using the FB in a program that is to be executed only once, such as a subroutine program or a FOR-NEXT loop, has a problem that i_bEN (execution command) can no longer be turned off and normal operation is not possible; Always use the FB in a program that is capable of turning off the execution command. • To use more than one of this FB, care must be taken to avoid duplication of the target channel. • The FB requires the configuration of the ladder for every input label.	

Error code

Error code	Description	Action
100H	The target channel is set out of the range. Set the target channel within the range of 1 to 8.	Review and correct the setting and then execute the FB again.
200H	The external power supply is not applied to the analog-digital converter module.	Check the external power supply and then execute the FB again.
201H	A target channel for HART communications is not enabled.	Review and correct the setting and then execute the FB again.
202H	HART scan list is indicating no HART-enabled device detected.	Check the state of HART-enabled device and then execute the FB again.

2.14 M+Model_HARTCommandRequest

Name

The module names of the FB are based on the module used and are as follows.

■R60ADI8-HA

M+R60ADHART_HARTCommandRequest

Overview

Item	Description
Functional overview	Sends HART command request data to a HART-enabled device and receives HART command answer data from the HART-enabled device.
Symbol	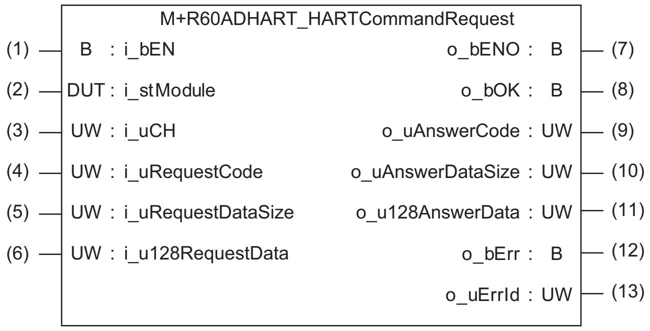 M+R60ADHART_HARTCommandRequest (1) B : i_bEN (2) DUT : i_stModule (3) UW : i_uCH (4) UW : i_uRequestCode (5) UW : i_uRequestDataSize (6) UW : i_u128RequestData o_bENO : B (7) o_bOK : B (8) o_uAnswerCode : UW (9) o_uAnswerDataSize : UW (10) o_u128AnswerData : UW (11) o_bErr : B (12) o_uErrId : UW (13)

Labels to use

■Input labels

No.	Variable name	Name	Data type	Scope	Description
(1)	i_bEN	Execution command	Bit	On or off	On: The FB is activated. Off: The FB is not activated.
(2)	i_stModule	Module label	Structure	The scope differs depending on the module label.	Specifies a module label of the analog-digital converter module.
(3)	i_uCH	Target channel	Word [unsigned]	1 to 8	Specifies a channel number.
(4)	i_uRequestCode	HART command request code	Word [unsigned]	0 to 255	Sets HART command according to HART communication protocol specifications or manuals of the HART-enabled devices used.
(5)	i_uRequestDataSize	HART command request data size	Word [unsigned]	0 to 255	Sets the size of data to be sent to a HART-enabled device.
(6)	i_u128RequestData	HART command request data	Word [unsigned]	Lower byte: 0 to 255 Upper byte: 0 to 255	Sets data to be sent to a HART-enabled device.

- The following figure shows setting details of i_u128RequestData (HART command request data). Set 128 words in the following data array.

	b8 to b15	b0 to b7
i_u128RequestData[0]	HART command request data (2nd byte)	HART command request data (1st byte)
i_u128RequestData[1]	HART command request data (4th byte)	HART command request data (3rd byte)
i_u128RequestData[2]	HART command request data (6th byte)	HART command request data (5th byte)
	⋮	⋮
i_u128RequestData[126]	HART command request data (254th byte)	HART command request data (253rd byte)
i_u128RequestData[127]	Not used (fixed to 0)	HART command request data (255th byte)

■Output labels

No.	Variable name	Name	Data type	Default value	Description
(7)	o_bENO	Execution status	Bit	Off	On: The execution command is on. Off: The execution command is off.
(8)	o_bOK	Normal completion	Bit	Off	The on state indicates that the HART command request is complete.
(9)	o_uAnswerCode	HART command answer code	Word [unsigned]	0	The HART command that has been executed is stored.
(10)	o_uAnswerDataSize	HART command answer data size	Word [unsigned]	0	The size of valid HART command data is stored.
(11)	o_u128AnswerData	HART command answer data	Word [unsigned]	Lower byte: 0 Upper byte: 0	Answer data from the HART-enabled device is stored.
(12)	o_bErr	Error completion	Bit	Off	The on state indicates that an error has occurred in the FB.
(13)	o_uErrId	Error code	Word [unsigned]	0	The error code of an error occurred in the FB is stored.

- The following figure shows details of data stored in o_u128AnswerData (HART command answer data). Data of 128 words are stored in the following array.

	b8 to b15	b0 to b7
o_u128AnswerData[0]	HART command answer data (2nd byte)	HART command answer data (1st byte)
o_u128AnswerData[1]	HART command answer data (4th byte)	HART command answer data (3rd byte)
o_u128AnswerData[2]	HART command answer data (6th byte)	HART command answer data (5th byte)
	⋮	⋮
o_u128AnswerData[126]	HART command answer data (254th byte)	HART command answer data (253rd byte)
o_u128AnswerData[127]	Not used (fixed to 0)	HART command answer data (255th byte)

FB details

Item	Description	
Relevant devices	Relevant modules	R60ADI8-HA
	Relevant CPU modules	MELSEC iQ-R series CPU modules
	Relevant engineering tool	GX Works3
Language to use	Ladder diagram	
Number of basic steps	162 steps The number of steps of the FB embedded in a program depends on the CPU module used, the input/output definitions, and the options setting of GX Works3. For the options setting of GX Works3, refer to the GX Works3 Operating Manual.	
Functional description	• As i_bEN (execution command) turns on, a HART command request is executed in a specified channel. • This FB works for only one shot as i_bEN (execution command) turns on. • Values set in i_u128RequestData (HART command request data) are sent to a HART-enabled device. The size of data to be sent needs to be set in i_uRequestDataSize (HART command request data size). • Answer data from the HART-enabled device is stored in o_u128AnswerData (HART command answer data). The stored values vary depending on the specifications of HART command set in i_uRequestCode (HART command request code) as well as the specifications of HART-enabled device used. o_uAnswerDataSize (HART command answer data size) stores the size of valid data in o_u128AnswerData (HART command answer data). • If the value set in i_uCH (target channel), i_uRequestCode (HART command request code), or i_uRequestDataSize (HART command request data size) is out of the range, o_bErr (error completion) turns on and the processing of the FB is interrupted. In addition, the error code is stored in o_uErrId (error code). For the error code, refer to the list of error codes. (☞ Page 52 Error code) • If a timeout of HART device answer occurs, or the number of HART commands executed reaches the maximum number of retries, o_bErr (error completion) turns on and the processing of the FB is interrupted. In addition, the error code is stored in o_uErrId (error code). For the error code, refer to the list of error codes. (☞ Page 52 Error code) • If a condition required for HART communications is not satisfied, such as HART communications being disabled for a target channel, o_bErr (error completion) turns on and the processing of the FB is interrupted. In addition, the error code is stored in o_uErrId (error code). For the error code, refer to the list of error codes. (☞ Page 52 Error code)	
FB compilation method	Macro type	
FB operation	Arbitrary execution type	
Timing chart of I/O signals	■When the operation is completed successfully 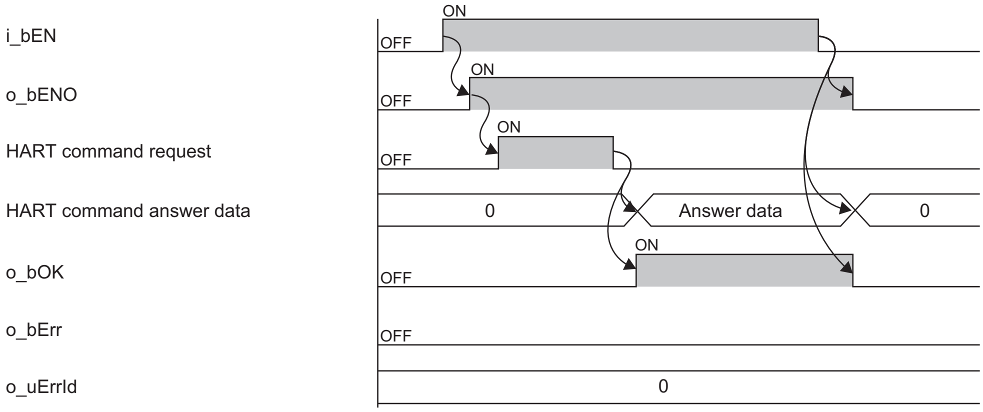 i_bEN o_bENO HART command request HART command answer data o_bOK o_bErr o_uErrId ON OFF 0 Answer data ■When the operation is completed with an error 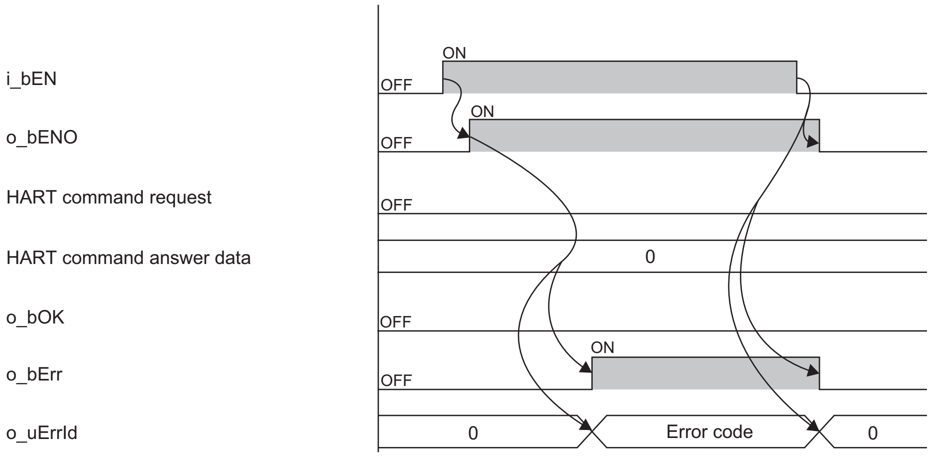 i_bEN o_bENO HART command request HART command answer data o_bOK o_bErr o_uErrId ON OFF 0 Error code	

Item	Description
Restrictions and precautions	• This FB does not include the error recovery processing. Prepare the error recovery processing separately to suit the user's system and the expected operation. • The FB cannot be used in an interrupt program. • Using the FB in a program that is to be executed only once, such as a subroutine program or a FOR-NEXT loop, has a problem that i_bEN (execution command) can no longer be turned off and normal operation is not possible; Always use the FB in a program that is capable of turning off the execution command. • To use more than one of this FB, care must be taken to avoid duplication of the target channel. • The FB requires the configuration of the ladder for every input label.

Error code

Error code	Description	Action
100H	The target channel is set out of the range. Set the target channel within the range of 1 to 8.	Review and correct the setting and then execute the FB again.
101H	The HART command request code is set out of the range. Set the HART command request code within the range of 0 to 255.	Review and correct the setting and then execute the FB again.
102H	The HART command request data size is set out of the range. Set the HART command request data size within the range of 0 to 255.	Review and correct the setting and then execute the FB again.
200H	The external power supply is not applied to the analog-digital converter module.	Check the external power supply and then execute the FB again.
201H	A target channel for HART communications is not enabled.	Review and correct the setting and then execute the FB again.
202H	HART scan list is indicating no HART-enabled device detected.	Check the state of HART-enabled device and then execute the FB again.
203H	A timeout of HART device answer has occurred while the HART command request was being executed.	Check the setting and state of HART-enabled device and then execute the FB again.
204H	The number of HART commands executed has reached the maximum number of retries while the HART command request was being executed.	Check the setting and state of HART-enabled device and then execute the FB again.

3 DIGITAL-ANALOG CONVERTER MODULE FB

3.1 M+Model_RequestSetting

Name

The module names of the FB are based on the module used and are as follows.

■R60DA4, R60DAV8, R60DAI8

M+R60DA_RequestSetting

■R60DA8-G

M+R60DAG_RequestSetting

■R60DA16-G

M+R60DAG16_RequestSetting

■R60DAH4

M+R60DAH_RequestSetting

Overview

Item	Description
Functional overview	Enables the settings of each function.
Symbol	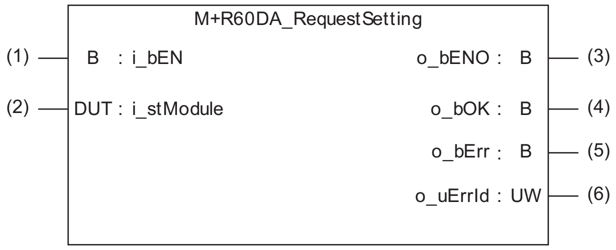 M+R60DA_RequestSetting (1) B : i_bEN o_bENO : B (3) (2) DUT : i_stModule o_bOK : B (4) o_bErr : B (5) o_uErrId : UW (6)

Labels to use

■Input labels

No.	Variable name	Name	Data type	Scope	Description
(1)	i_bEN	Execution command	Bit	On or off	On: The FB is activated. Off: The FB is not activated.
(2)	i_stModule	Module label	Structure	The scope differs depending on the module label.	Specifies a module label of the digital-analog converter module.

■Output labels

No.	Variable name	Name	Data type	Default value	Description
(3)	o_bENO	Execution status	Bit	Off	On: The execution command is on. Off: The execution command is off.
(4)	o_bOK	Normal completion	Bit	Off	The on state indicates that the operation to enable each setting is complete.
(5)	o_bErr	Error completion	Bit	Off	Always off
(6)	o_uErrId	Error code	Word [unsigned]	0	Always 0

FB details

Item	Description	
Relevant devices	Relevant modules	R60DA4, R60DAV8, R60DAI8, R60DA8-G, R60DA16-G, R60DAH4
	Relevant CPU modules	MELSEC iQ-R series CPU modules
	Relevant engineering tool	GX Works3
Language to use	Ladder diagram	
Number of basic steps	■R60DA4, R60DAV8, R60DAI8, R60DA8-G, R60DA16-G 24 steps ■R60DAH4 26 steps The number of steps of the FB embedded in a program depends on the CPU module used, the input/output definitions, and the options setting of GX Works3. For the options setting of GX Works3, refer to the GX Works3 Operating Manual.	
Functional description	• Turning on i_bEN (execution command) allows the settings of all channels to be enabled. For what settings are enabled, refer to the user's manual (Application) of the digital-analog converter module used. • This FB continues its execution until the completion of the settings of each function after i_bEN (execution command) turns on.	
FB compilation method	Macro type	
FB operation	Pulse execution type (multiple scan execution type)	
Timing chart of I/O signals	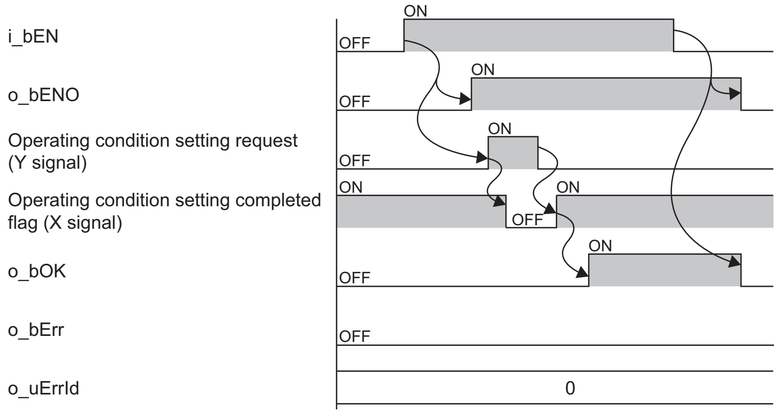 i_bEN o_bENO Operating condition setting request (Y signal) Operating condition setting completed flag (X signal) o_bOK o_bErr o_uErrId ON OFF 0	
Restrictions and precautions	• This FB does not include the error recovery processing. Prepare the error recovery processing separately to suit the user's system and the expected operation. • The FB cannot be used in an interrupt program. • This FB turns on or off Operating condition setting request (Yn9). Attention is required as D/A conversion stops during execution of this FB. • Putting a digital-analog converter module into operation requires the output range and operation mode to be set according to the connected devices and the system in use. Set up the module parameters of GX Works3 according to the application. For how to set up the module parameters, refer to the user's manual of the digital-analog converter module (Application).	

Error code

Error code	Description	Action
None	None	None

3.2 M+Model_OperateError

Name

The module names of the FB are based on the module used and are as follows.

■R60DA4, R60DAV8, R60DAI8

M+R60DA_OperateError

■R60DA8-G

M+R60DAG_OperateError

■R60DA16-G

M+R60DAG16_OperateError

■R60DAH4

M+R60DAH_OperateError

Overview

Item	Description
Functional overview	Monitors error codes and resets errors.
Symbol	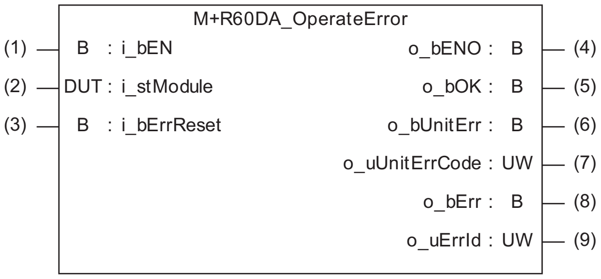

Labels to use

■Input labels

No.	Variable name	Name	Data type	Scope	Description
(1)	i_bEN	Execution command	Bit	On or off	On: The FB is activated. Off: The FB is not activated.
(2)	i_stModule	Module label	Structure	The scope differs depending on the module label.	Specifies a module label of the digital-analog converter module.
(3)	i_bErrReset	Error reset request	Bit	On or off	Turn on this label to reset the errors. Turn off this label after the error reset.

■Output labels

No.	Variable name	Name	Data type	Default value	Description
(4)	o_bENO	Execution status	Bit	Off	On: The execution command is on. (Module errors are being monitored.) Off: The execution command is off.
(5)	o_bOK	Normal completion	Bit	Off	The on state indicates that executing the error reset instruction has been completed.
(6)	o_bUnitErr	Unit error outbreak flag	Bit	Off	The on state indicates that a module error has occurred.
(7)	o_uUnitErrCode	Unit error code	Word [unsigned]	0	The error code of an error occurred is stored.
(8)	o_bErr	Error completion	Bit	Off	Always off
(9)	o_uErrId	Error code	Word [unsigned]	0	Always 0

FB details

Item	Description	
Relevant devices	Relevant modules	R60DA4, R60DAV8, R60DAI8, R60DA8-G, R60DA16-G, R60DAH4
	Relevant CPU modules	MELSEC iQ-R series CPU modules
	Relevant engineering tool	GX Works3
Language to use	Ladder diagram	
Number of basic steps	■R60DA4, R60DAV8, R60DAI8, R60DA8-G, R60DA16-G 45 steps ■R60DAH4 47 steps The number of steps of the FB embedded in a program depends on the CPU module used, the input/output definitions, and the options setting of GX Works3. For the options setting of GX Works3, refer to the GX Works3 Operating Manual.	
Functional description	• As i_bEN (execution command) turns on, the error information in the target module is monitored. • After i_bEN (execution command) turns on, turning on i_bErrReset (error reset request) during an error allows the error to be reset.	
FB compilation method	Macro type	
FB operation	Arbitrary execution type	
Timing chart of I/O signals	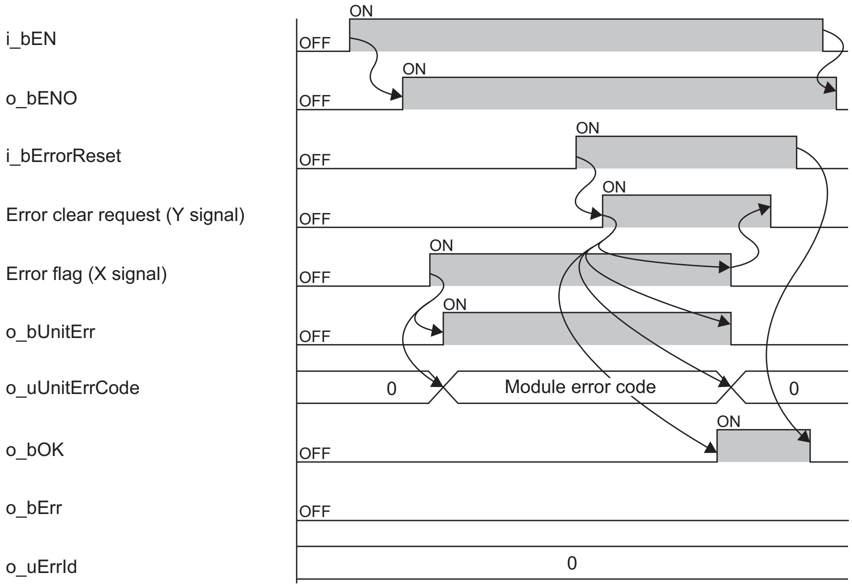	
Restrictions and precautions	• This FB does not include the error recovery processing. Prepare the error recovery processing separately to suit the user's system and the expected operation. • The FB cannot be used in an interrupt program. • Putting a digital-analog converter module into operation requires the output range and operation mode to be set according to the connected devices and the system in use. Set up the module parameters of GX Works3 according to the application. For how to set up the module parameters, refer to the user's manual of the digital-analog converter module (Application).	

Error code

Error code	Description	Action
None	None	None

3.3 M+Model_WaveOutputSetting

Name

The module names of the FB are based on the module used and are as follows.

■R60DA4, R60DAV8, R60DAI8

M+R60DA_WaveOutputSetting

■R60DAH4

M+R60DAH_WaveOutputSetting

Overview

Item	Description
Functional overview	Sets the wave output of a specified channel or all channels.
Symbol	■R60DA4, R60DAV8, R60DAI8 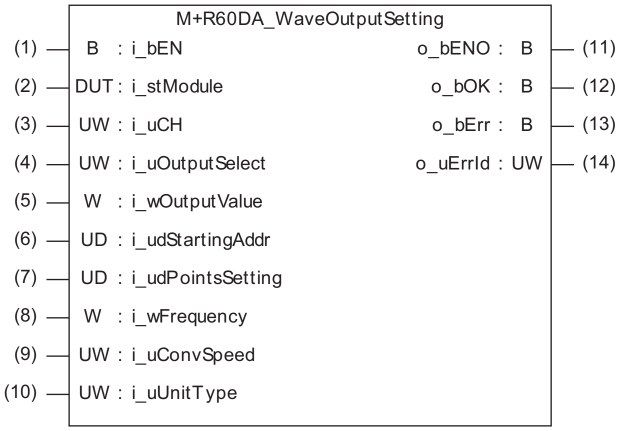 M+R60DA_WaveOutputSetting (1) B : i_bEN (2) DUT : i_stModule (3) UW : i_uCH (4) UW : i_uOutputSelect (5) W : i_wOutputValue (6) UD : i_udStartingAddr (7) UD : i_udPointsSetting (8) W : i_wFrequency (9) UW : i_uConvSpeed (10) UW : i_uUnitType o_bENO : B (11) o_bOK : B (12) o_bErr : B (13) o_uErrId : UW (14) ■R60DAH4 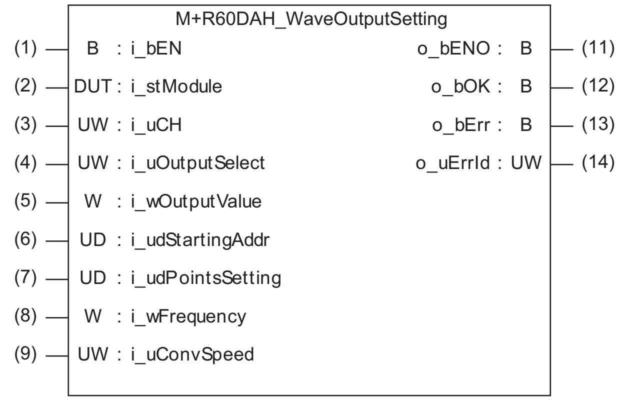 M+R60DAH_WaveOutputSetting (1) B : i_bEN (2) DUT : i_stModule (3) UW : i_uCH (4) UW : i_uOutputSelect (5) W : i_wOutputValue (6) UD : i_udStartingAddr (7) UD : i_udPointsSetting (8) W : i_wFrequency (9) UW : i_uConvSpeed o_bENO : B (11) o_bOK : B (12) o_bErr : B (13) o_uErrId : UW (14)

Labels to use

■Input labels

No.	Variable name	Name	Data type	Scope	Description
(1)	i_bEN	Execution command	Bit	On or off	On: The FB is activated. Off: The FB is not activated.
(2)	i_stModule	Module label	Structure	The scope differs depending on the module label.	Specifies a module label of the digital-analog converter module.
(3)	i_uCH	Target channel	Word [unsigned]	■R60DA4, R60DAH4 1 to 4, 15 ■R60DAV8, R60DAI8 1 to 8, 15	■R60DA4, R60DAH4 • 1 to 4: The corresponding channel number is specified. • 15: All channels are specified. ■R60DAV8, R60DAI8 • 1 to 8: The corresponding channel number is specified. • 15: All channels are specified.
(4)	i_uOutputSelect	Output selection during waveform output stop	Word [unsigned]	0: 0V/0mA 1: Offset value 2: Output setting value during waveform output stop	Specifies the output value during wave output stop.
(5)	i_wOutputValue	Output setting value during waveform output stop	Word [signed]	■When an output range is 0 to 5V, 1 to 5V, 0 to 20mA, or 4 to 20mA 0 to 32767 ■When an output range is -10 to 10V -32768 to 32767	Sets the value to be output when 2 (Output setting value during waveform output stop) is selected in the output selection during waveform output stop.
(6)	i_udStartingAddr	Waveform pattern start address setting	Double Word [unsigned]	■R60DA4, R60DAV8, R60DAI8 10000 to 89999 ■R60DAH4 10000 to 99999	Sets the start address of a wave pattern to be output.
(7)	i_udPointsSetting	Number of waveform pattern points setting	Double Word [unsigned]	■R60DA4, R60DAV8, R60DAI8 1 to 80000 (point) ■R60DAH4 1 to 90000 (point)	Sets the number of data points of a wave pattern to be output.
(8)	i_wFrequency	Number of waveform outputs setting	Word [signed]	-1: Infinite repetition output 1 to 32767: Specified number of times output	Sets the number of output times of a wave pattern.
(9)	i_uConvSpeed	Waveform output conversion cycle constant	Word [unsigned]	1 to 5000	Sets the constant that defines the conversion cycle of wave output.
(10)	i_uUnitType	Module type	Word [unsigned]	0: R60DA4 1: R60DAV8 2: R60DAI8	Specifies a module type.

■Output labels

No.	Variable name	Name	Data type	Default value	Description
(11)	o_bENO	Execution status	Bit	Off	On: The execution command is on. Off: The execution command is off.
(12)	o_bOK	Normal completion	Bit	Off	The on state indicates that setting the wave output has been completed.
(13)	o_bErr	Error completion	Bit	Off	The on state indicates that an error has occurred in the FB.
(14)	o_uErrId	Error code	Word [unsigned]	0	The error code of an error occurred in the FB is stored.

FB details

Item	Description	
Relevant devices	Relevant modules	R60DA4, R60DAV8, R60DAI8, R60DAH4
	Relevant CPU modules	MELSEC iQ-R series CPU modules
	Relevant engineering tool	GX Works3
Language to use	Ladder diagram	
Number of basic steps	■R60DA4, R60DAV8, R60DAI8 862 steps ■R60DAH4 160 steps The number of steps of the FB embedded in a program depends on the CPU module used, the input/output definitions, and the options setting of GX Works3. For the options setting of GX Works3, refer to the GX Works3 Operating Manual.	
Functional description	• As i_bEN (execution command) turns on, the wave output settings of a specified channel or all channels are written. • The wave output setting is enabled only when the output mode setting is set to the wave output mode. The wave data for analog output is required to be set in advance. • The set value is enabled by turning on and off 'Operating condition setting request' (Yn9) or executing the operating condition setting request operation FB (M+Model_RequestSetting). • If the set value of the target channel is out of the range, o_bErr (error completion) turns on and the processing of the FB is interrupted. In addition, the error code is stored in o_uErrId (error code). For the error code, refer to the list of error codes. (☞ Page 60 Error code)	
FB compilation method	Macro type	
FB operation	Pulse execution type (single scan execution type)	
Timing chart of I/O signals	■When the operation is completed successfully 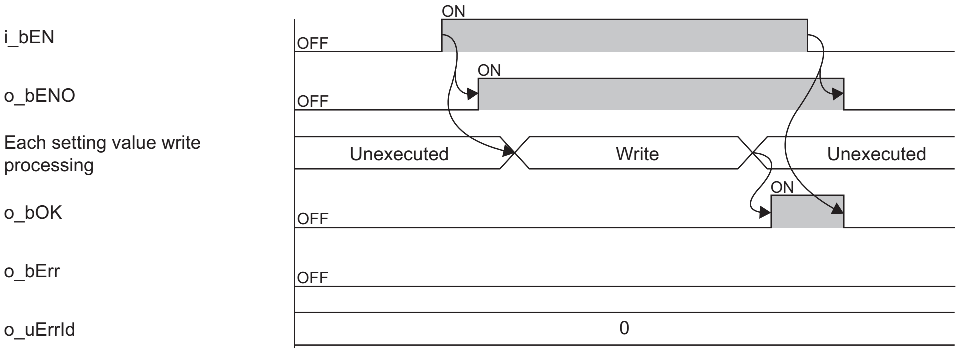 i_bEN o_bENO Each setting value write processing o_bOK o_bErr o_uErrId ON OFF ON OFF Unexecuted Write Unexecuted ON OFF OFF 0 ■When the operation is completed with an error 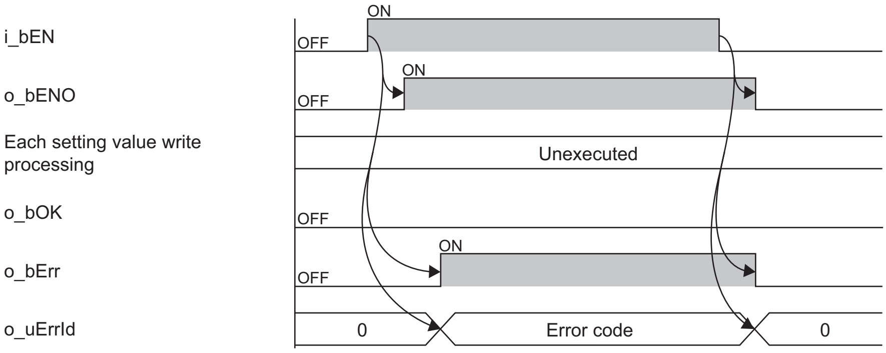 i_bEN o_bENO Each setting value write processing o_bOK o_bErr o_uErrId ON OFF ON OFF Unexecuted OFF ON OFF 0 Error code 0	
Restrictions and precautions	• This FB does not include the error recovery processing. Prepare the error recovery processing separately to suit the user's system and the expected operation. • The FB cannot be used in an interrupt program. • Using the FB in a program that is to be executed only once, such as a subroutine program or a FOR-NEXT loop, has a problem that i_bEN (execution command) can no longer be turned off and normal operation is not possible; Always use the FB in a program that is capable of turning off the execution command. • To use more than one of this FB, care must be taken to avoid duplication of the target channel. • The FB requires the configuration of the ladder for every input label. • Putting a digital-analog converter module into operation requires the output range to be set according to the connected devices and the system in use. Set up the module parameters of GX Works3 according to the application. For how to set up the module parameters, refer to the user's manual of the digital-analog converter module (Application).	

Error code

Error code	Description	Action
100H	■R60DA4, R60DAV8, R60DAI8 The target channel is set out of the range. Set the target channel within the following range. • R60DA4: 1 to 4, 15 • R60DAV8/R60DAI8: 1 to 8, 15	Review and correct the setting and then execute the FB again.
	■R60DAH4 The target channel is set out of the range. Set the target channel within the range of 1 to 4 or at 15.	
102H	The module type is set out of the range. Set the module type to the following values. • R60DA4: 0 • R60DAV8: 1 • R60DAI8: 2	Review and correct the setting and then execute the FB again.

3.4 M+Model_WaveDataStoreCsv

Name

The module names of the FB are based on the module used and are as follows.

■R60DA4, R60DAV8, R60DAI8

M+R60DA_WaveDataStoreCsv

■R60DAH4

M+R60DAH_WaveDataStoreCsv

Overview

Item	Description
Functional overview	Reads out data from the CSV file that holds the parameters and the wave data (number of wave data points and wave data) of the wave output function, and writes the data to the buffer memory of the digital-analog converter module.
Symbol	■R60DA4, R60DAV8, R60DAI8 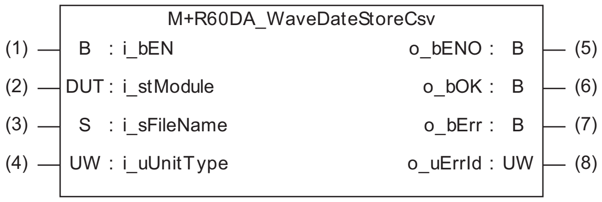 M+R60DA_WaveDateStoreCsv (1) B : i_bEN (2) DUT : i_stModule (3) S : i_sFileName (4) UW : i_uUnitType o_bENO : B (5) o_bOK : B (6) o_bErr : B (7) o_uErrId : UW (8) ■R60DAH4 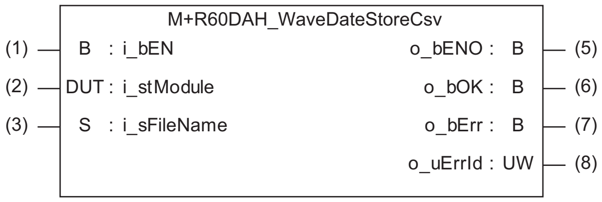 M+R60DAH_WaveDateStoreCsv (1) B : i_bEN (2) DUT : i_stModule (3) S : i_sFileName o_bENO : B (5) o_bOK : B (6) o_bErr : B (7) o_uErrId : UW (8)

Labels to use

■Input labels

No.	Variable name	Name	Data type	Scope	Description
(1)	i_bEN	Execution command	Bit	On or off	On: The FB is activated. Off: The FB is not activated.
(2)	i_stModule	Module label	Structure	The scope differs depending on the module label.	Specifies a module label of the digital-analog converter module.
(3)	i_sFileName	CSV file name	Character string [unicode]	Within 64 characters	Specifies a name of the CSV file in which the parameters and wave data of the wave output function are stored. Only the file attribute CSV is valid. For details on the CSV file format, refer to the following: ☞ Page 79 CSV File Format of the FB for Reading Wave Data (CSV File)
(4)	i_uUnitType	Module type	Word [unsigned]	0: R60DA4 1: R60DAV8 2: R60DAI8	Specifies a module type.

■Output labels

No.	Variable name	Name	Data type	Default value	Description
(5)	o_bENO	Execution status	Bit	Off	On: The execution command is on. Off: The execution command is off.
(6)	o_bOK	Normal completion	Bit	Off	The on state indicates that writing the parameters and wave data of the wave output function in the CSV file to the buffer memory of the digital-analog converter module is completed.
(7)	o_bErr	Error completion	Bit	Off	The on state indicates that an error has occurred in the FB.
(8)	o_uErrId	Error code	Word [unsigned]	0	The error code of an error occurred in the FB is stored.

FB details

Item	Description	
Relevant devices	Relevant modules	R60DA4, R60DAV8, R60DAI8, R60DAH4
	Relevant CPU modules	MELSEC iQ-R series CPU modules
	Relevant engineering tool	GX Works3
Language to use	Ladder diagram	
Number of basic steps	■R60DA4, R60DAV8, R60DAI8 660 steps ■R60DAH4 596 steps The number of steps of the FB embedded in a program depends on the CPU module used, the input/output definitions, and the options setting of GX Works3. For the options setting of GX Works3, refer to the GX Works3 Operating Manual.	
Functional description	• As i_bEN (execution command) turns on, the FB reads out the parameters and wave data of the wave output function from the CSV file, which is stored in the SD memory card inserted in the CPU module, and stores the data to the buffer memory of the digital-analog converter module. For the wave output function, refer to the user's manual (Application) of the digital-analog converter module used. • For the parameters and data of the wave output function and the buffer memory address of storage destination, which are related to this FB, refer to Storage Source "Parameter/Data of Waveform Output Function" and Storage Destination Buffer Memory (☞ Page 76 Storage Source "Parameter/Data of Waveform Output Function" and Storage Destination Buffer Memory). At first, the FB reads all the parameters of the wave output function from the CSV file, and stores them in the buffer memory. Next, the FB reads the wave data, the number of which is specified by the number of wave data points in the row 100 in the CSV file, in the order starting from the row 101, and stores the data in the order from the start address (Un\G10000) of the wave data registry area in the buffer memory. The number of channels to be set in the CSV file differs depending on the module. (☞ Page 79 CSV File Format of the FB for Reading Wave Data (CSV File)). Note that the wave output data creation tool of GX Works3 makes it easy to create the CSV file of the wave output function. • If this FB is executed with no SD memory card inserted into the CPU module, o_bErr (error completion) turns on and the processing of the FB is interrupted. In addition, the error code 202H is stored in o_uErrId (error code). For the error code, refer to the list of error codes. (☞ Page 65 Error code) • If this FB is executed with the special relay SM606 (SD memory card forced disable instruction) turning on, o_bErr (error completion) turns on and the processing of the FB is interrupted. In addition, the error code 201H is stored in o_uErrId (error code). For the error code, refer to the list of error codes. (☞ Page 65 Error code) • If a CSV file specified by i_sFileName (CSV file name) does not exist in the SD memory card inserted into the CPU module, a CPU error (error code: 8002H) occurs. • A setting that the CPU module enters a stop error state during a CPU error does not allow o_bErr (error completion) and o_uErrId (error code) to be updated. The operating status (continue/stop) of the CPU module that results from a CPU error can be set in [RAS Setting]. ("File Name Specification Incorrect" in "CPU Module Operation Setting at Error Detection" from [CPU Parameter] - [RAS Setting]) • Before processing of the FB is complete, turning off i_bEN (execution command) results in the processing being interrupted. In this case, the data that is already stored in the buffer memory is not cleared. Executing the FB once again allows read processing to start from the beginning. • Do not remove the SD memory card while this FB is being executed. For how to insert and remove an SD memory card, refer to the MELSEC iQ-R CPU Module User's Manual (Startup).	
FB compilation method	Macro type	
FB operation	Pulse execution type (multiple scan execution type)	

Item	Description
Timing chart of I/O signals	■When the operation is completed successfully 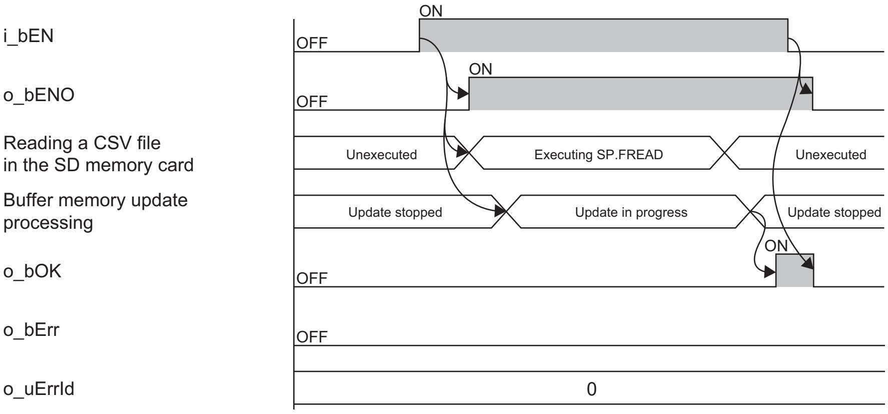 i_bEN o_bENO Reading a CSV file in the SD memory card Buffer memory update processing o_bOK o_bErr o_uErrId ON OFF ON OFF Unexecuted Executing SP.FREAD Unexecuted Update stopped Update in progress Update stopped ON OFF OFF 0 ■When the operation is completed with an error 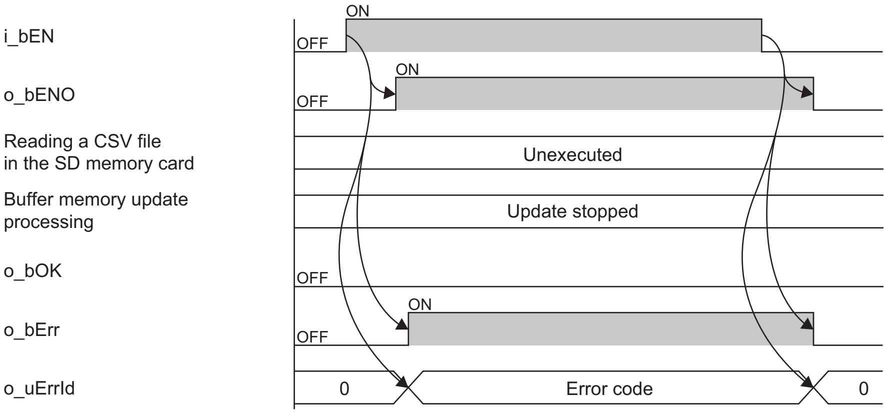 i_bEN o_bENO Reading a CSV file in the SD memory card Buffer memory update processing o_bOK o_bErr o_uErrId ON OFF ON OFF Unexecuted Update stopped OFF ON OFF 0 Error code 0
Restrictions and precautions	• This FB takes some time to complete the processing because a large number of scans is necessary until the completion of the processing. • This FB does not include the error recovery processing. Prepare the error recovery processing separately to suit the user's system and the expected operation. • The FB cannot be used in an interrupt program. • Using the FB in a program that is to be executed only once, such as a subroutine program or a FOR-NEXT loop, has a problem that i_bEN (execution command) can no longer be turned off and normal operation is not possible; Always use the FB in a program that is capable of turning off the execution command. • This FB makes use of the SP.FREAD instruction, and so an error in the execution of the SP.FREAD instruction causes a CPU error. • When processing that accesses the SD memory card, such as the data logging function of the CPU module, is executed together with this FB, the time to complete the execution of the FB may be extended or the error 204H (timeout) may occur. • If more than one of this FB is used, simultaneous execution is not possible. • The FB requires the configuration of the ladder for every input label. • Putting a digital-analog converter module into operation requires the output range to be set according to the connected devices and the system in use. Set up the module parameters of GX Works3 according to the application. For how to set up the module parameters, refer to the user's manual of the digital-analog converter module (Application).

Error code

Error code	Description	Action
102H	The module type is set out of the range. Set the module type to the following values. • R60DA4: 0 • R60DAV8: 1 • R60DAI8: 2	Review and correct the setting and then execute the FB again.
201H	An access to the SD memory card has failed because SM606 (SD memory card forced disable instruction) is turned on.	Turn off SM606 and check that SM607 (SD memory card forced stop status flag) is turned off, then execute the FB again.
202H	Execution of this FB has been attempted without inserting an SD memory card into the CPU module.	Insert an SD memory card that has the target CSV files into the CPU module, and execute the FB again. Insert a usable SD memory card in the CPU module, and save the target CSV file with the PLC user data write function of GX Works3. Then, execute the FB again.
203H	An access to the SD memory card has failed because SM605 (Memory card insertion/removal inhibit flag) is off (removal allowed).	Turn on (removal inhibited) SM605 (Memory card insertion/removal inhibit flag), and execute the FB again.
204H	The SD memory card is frequently accessed from programs in addition to this FB, and a timeout has occurred in the wave data reading processing.	Reduce the frequency of the access to the SD memory card.
Error codes other than the above	Error codes related to the SP.FREAD instruction to be executed when the parameter and wave data of the wave output function are read from the SD memory card	For details on the error code that has occurred, refer to the description of the SP.FREAD instruction. (📖 MELSEC iQ-R Programming Manual (Instructions, Standard Functions/Function Blocks))

3.5 M+Model_WaveDataStoreDev

Name

The module names of the FB are based on the module used and are as follows.

■R60DA4, R60DAV8, R60DAI8

M+R60DA_WaveDataStoreDev

■R60DAH4

M+R60DAH_WaveDataStoreDev

Overview

Item	Description
Functional overview	Reads out data from the file register (ZR) that holds the parameters and the wave data (number of wave data points and wave data) of the wave output function, and writes the data to the buffer memory of the digital-analog converter module.
Symbol	■R60DA4, R60DAV8, R60DAI8 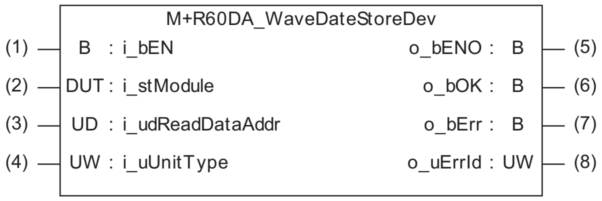 M+R60DA_WaveDateStoreDev (1) B : i_bEN (2) DUT : i_stModule (3) UD : i_udReadDataAddr (4) UW : i_uUnitType o_bENO : B (5) o_bOK : B (6) o_bErr : B (7) o_uErrId : UW (8) ■R60DAH4 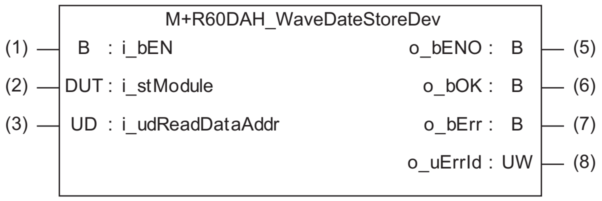 M+R60DAH_WaveDateStoreDev (1) B : i_bEN (2) DUT : i_stModule (3) UD : i_udReadDataAddr o_bENO : B (5) o_bOK : B (6) o_bErr : B (7) o_uErrId : UW (8)

Labels to use

■Input labels

No.	Variable name	Name	Data type	Scope	Description
(1)	i_bEN	Execution command	Bit	On or off	On: The FB is activated. Off: The FB is not activated.
(2)	i_stModule	Module label	Structure	The scope differs depending on the module label.	Specifies a module label of the digital-analog converter module.
(3)	i_udReadDataAddr	Reading start address	Double Word [unsigned]	Valid device range	Specifies the start address of the file register (ZR) in which the parameters and wave data of the wave output function are stored.
(4)	i_uUnitType	Module type	Word [unsigned]	0: R60DA4 1: R60DAV8 2: R60DAI8	Specifies a module type.

■Output labels

No.	Variable name	Name	Data type	Default value	Description
(5)	o_bENO	Execution status	Bit	Off	On: The execution command is on. Off: The execution command is off.
(6)	o_bOK	Normal completion	Bit	Off	The on state indicates that writing the parameters and wave data of the wave output function in the file register (ZR) to the buffer memory of the digital-analog converter module is completed.
(7)	o_bErr	Error completion	Bit	Off	The on state indicates that an error has occurred in the FB.
(8)	o_uErrId	Error code	Word [unsigned]	0	The error code of an error occurred in the FB is stored.

FB details

Item	Description	
Relevant devices	Relevant modules	R60DA4, R60DAV8, R60DAI8, R60DAH4
	Relevant CPU modules	MELSEC iQ-R series CPU modules
	Relevant engineering tool	GX Works3
Language to use	Ladder diagram	
Number of basic steps	■R60DA4, R60DAV8, R60DAI8 668 steps ■R60DAH4 369 steps The number of steps of the FB embedded in a program depends on the CPU module used, the input/output definitions, and the options setting of GX Works3. For the options setting of GX Works3, refer to the GX Works3 Operating Manual.	
Functional description	• As i_bEN (execution command) turns on, the FB reads the parameters and wave data of the wave output function from the file register in the serial number access method (ZR), and stores them in the buffer memory of the digital-analog converter module. For the wave output function, refer to the user's manual (Application) of the digital-analog converter module used. • For the parameters and data of the wave output function and the buffer memory address of storage destination, which are related to this FB, refer to Storage Source "Parameter/Data of Waveform Output Function" and Storage Destination Buffer Memory (☞ Page 76 Storage Source "Parameter/Data of Waveform Output Function" and Storage Destination Buffer Memory). • This FB reads the parameters of the wave output function from ZR (m+0) specified by i_udReadDataAddr (read start address), and stores them in the buffer memory. Next, the FB reads the wave data, the number of which is specified by the number of wave data points in ZR (m+98, 99), in the order starting from ZR (m+100), and stores the data in the order from the start address (Un\G10000) of the wave data registry area in the buffer memory. Note that the wave output data creation tool of GX Works3 makes it easy to create the data of the file register (ZR) of the wave output function. The character m is the read start address of the file register (ZR). Specifying the number of points to be used in [File Setting] allows the reservation of file registers for any desired number and the distribution of data at any desired address. ([Parameter] - Model of the CPU module - [CPU Parameter] - "File Register Setting" of [File Setting]) • For the file registers (ZR) to be used, reserve the number of points no less than the number of wave data points plus 100 points. Under the condition that the number of points of the file register (ZR) specified by i_udReadDataAddr (read start address) is less than the number of wave data points of ZR (m+98, 99) plus 100 points, an execution of the FB results in the file register (ZR) exceeding the allowable range, causing a CPU error (error code: 4101H). • Before processing of the FB is complete, turning off i_bEN (execution command) results in the processing being interrupted. In this case, the data that is already stored in the buffer memory is not cleared. Executing the FB once again allows read processing to start from the beginning.	
FB compilation method	Macro type	
FB operation	Pulse execution type (multiple scan execution type)	

Item	Description
Timing chart of I/O signals	■When the operation is completed successfully 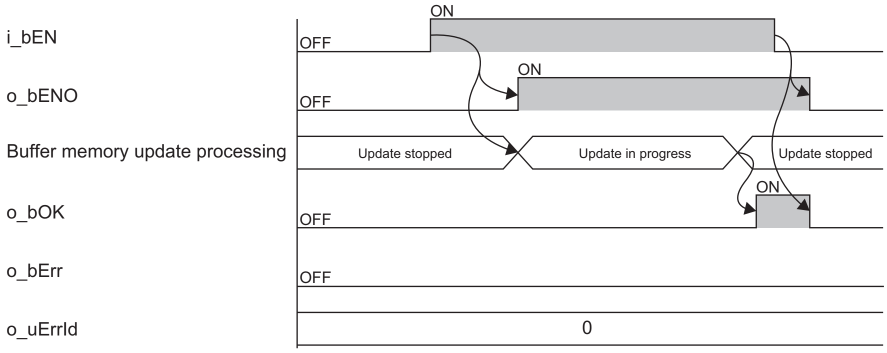 i_bEN o_bENO Buffer memory update processing o_bOK o_bErr o_uErrId ON OFF ON OFF Update stopped Update in progress Update stopped ON OFF OFF 0 ■When the operation is completed with an error 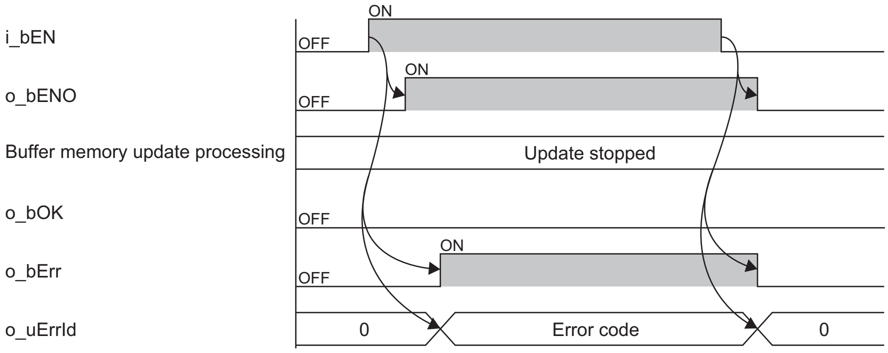 i_bEN o_bENO Buffer memory update processing o_bOK o_bErr o_uErrId ON OFF ON OFF Update stopped OFF ON OFF 0 Error code 0
Restrictions and precautions	• This FB takes some time to complete the processing because a large number of scans is necessary until the completion of the processing. • This FB does not include the error recovery processing. Prepare the error recovery processing separately to suit the user's system and the expected operation. • The FB cannot be used in an interrupt program. • Using the FB in a program that is to be executed only once, such as a subroutine program or a FOR-NEXT loop, has a problem that i_bEN (execution command) can no longer be turned off and normal operation is not possible; Always use the FB in a program that is capable of turning off the execution command. • If more than one of this FB is used, simultaneous execution is not possible. • The FB requires the configuration of the ladder for every input label. • Putting a digital-analog converter module into operation requires the output range to be set according to the connected devices and the system in use. Set up the module parameters of GX Works3 according to the application. For how to set up the module parameters, refer to the user's manual of the digital-analog converter module (Application).

Error code

Error code	Description	Action
102H	The module type is set out of the range. Set the module type to the following values. • R60DA4: 0 • R60DAV8: 1 • R60DAI8: 2	Review and correct the setting and then execute the FB again.

3.6 M+Model_WaveOutputReqSetting

Name

The module names of the FB are based on the module used and are as follows.

■R60DA4, R60DAV8, R60DAI8

M+R60DA_WaveOutputReqSetting

■R60DAH4

M+R60DAH_WaveOutputReqSetting

Overview

Item	Description
Functional overview	Specifies whether to start, stop, or pause the wave output of a specified channel or all channels.
Symbol	■R60DA4, R60DAV8, R60DAI8 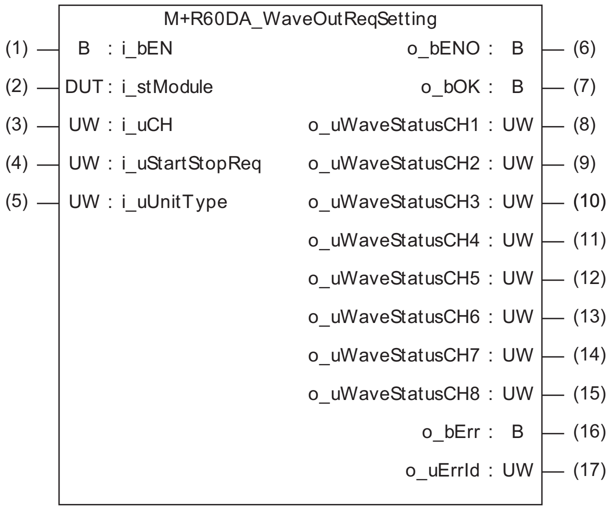 M+R60DA_WaveOutReqSetting (1) B : i_bEN (2) DUT : i_stModule (3) UW : i_uCH (4) UW : i_uStartStopReq (5) UW : i_uUnitType o_bENO : B (6) o_bOK : B (7) o_uWaveStatusCH1 : UW (8) o_uWaveStatusCH2 : UW (9) o_uWaveStatusCH3 : UW (10) o_uWaveStatusCH4 : UW (11) o_uWaveStatusCH5 : UW (12) o_uWaveStatusCH6 : UW (13) o_uWaveStatusCH7 : UW (14) o_uWaveStatusCH8 : UW (15) o_bErr : B (16) o_uErrId : UW (17) ■R60DAH4 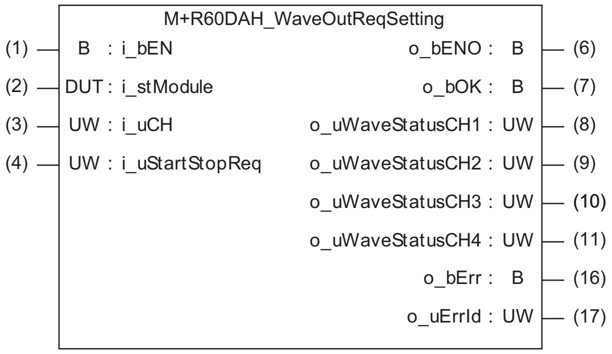 M+R60DAH_WaveOutReqSetting (1) B : i_bEN (2) DUT : i_stModule (3) UW : i_uCH (4) UW : i_uStartStopReq o_bENO : B (6) o_bOK : B (7) o_uWaveStatusCH1 : UW (8) o_uWaveStatusCH2 : UW (9) o_uWaveStatusCH3 : UW (10) o_uWaveStatusCH4 : UW (11) o_bErr : B (16) o_uErrId : UW (17)

Labels to use

■Input labels

No.	Variable name	Name	Data type	Scope	Description
(1)	i_bEN	Execution command	Bit	On or off	On: The FB is activated. Off: The FB is not activated.
(2)	i_stModule	Module label	Structure	The scope differs depending on the module label.	Specifies a module label of the digital-analog converter module.
(3)	i_uCH	Target channel	Word [unsigned]	■R60DA4, R60DAH4 1 to 4, 15 ■R60DAV8, R60DAI8 1 to 8, 15	■R60DA4, R60DAH4 • 1 to 4: The corresponding channel number is specified. • 15: All channels are specified. ■R60DAV8, R60DAI8 • 1 to 8: The corresponding channel number is specified. • 15: All channels are specified.
(4)	i_uStartStopReq	Waveform output start/stop request	Word [unsigned]	0: Waveform output stop request 1: Waveform output start request 2: Waveform output pause request	Specifies a start or stop request for the wave output.
(5)	i_uUnitType	Module type	Word [unsigned]	0: R60DA4 1: R60DAV8 2: R60DAI8	Specifies a module type.

■Output labels

No.	Variable name	Name	Data type	Default value	Description
(6)	o_bENO	Execution status	Bit	Off	On: The execution command is on. Off: The execution command is off.
(7)	o_bOK	Normal completion	Bit	Off	The on state indicates that the execution of the FB is normal.
(8)	o_uWaveStatusCH1	CH1 Wave pattern output state monitor	Word [unsigned]	0	Outputs the value of the wave output status (stopped, output, or paused). 0: Waveform output stopped 1: Waveform output 2: Waveform output paused 3: Waveform output step execution The FB is not capable of executing the wave output step action function. To execute the function, use the device/buffer memory batch monitor of GX Works3. For details, refer to the user's manual (Application) of the digital-analog converter module used.
(9)	o_uWaveStatusCH2	CH2 Wave pattern output state monitor	Word [unsigned]	0	
(10)	o_uWaveStatusCH3	CH3 Wave pattern output state monitor	Word [unsigned]	0	
(11)	o_uWaveStatusCH4	CH4 Wave pattern output state monitor	Word [unsigned]	0	
(12)	o_uWaveStatusCH5	CH5 Wave pattern output state monitor	Word [unsigned]	0	
(13)	o_uWaveStatusCH6	CH6 Wave pattern output state monitor	Word [unsigned]	0	
(14)	o_uWaveStatusCH7	CH7 Wave pattern output state monitor	Word [unsigned]	0	
(15)	o_uWaveStatusCH8	CH8 Wave pattern output state monitor	Word [unsigned]	0	
(16)	o_bErr	Error completion	Bit	Off	The on state indicates that an error has occurred in the FB.
(17)	o_uErrId	Error code	Word [unsigned]	0	The error code of an error occurred in the FB is stored.

FB details

Item	Description	
Relevant devices	Relevant modules	R60DA4, R60DAV8, R60DAI8, R60DAH4
	Relevant CPU modules	MELSEC iQ-R series CPU modules
	Relevant engineering tool	GX Works3
Language to use	Ladder diagram	
Number of basic steps	■R60DA4, R60DAV8, R60DAI8 587 steps ■R60DAH4 150 steps The number of steps of the FB embedded in a program depends on the CPU module used, the input/output definitions, and the options setting of GX Works3. For the options setting of GX Works3, refer to the GX Works3 Operating Manual.	
Functional description	• As i_bEN (execution command) turns on, a start or stop request for the wave output of a specified channel or all channels is written to the buffer memory. • As i_bEN (execution command) turns on, the FB outputs the values of 'CH☐ Waveform output status monitor' (Un\G401, Un\G601, Un\G801, Un\G1001, Un\G1201, Un\G1401, Un\G1601, Un\G1801). When an individual channel is specified in the input label, only this specified channel updates a wave output status monitor value and the other channels output 0. When all channels are specified in the input label, all the channels output wave output status monitor values. The number of channels with all channels specified depends on the module type. • As i_bEN (execution command) turns on, the FB always starts its execution. • To start wave output once again, after the wave output ends, change i_uStartStopReq (waveform output start/stop request) from 1 (waveform output start request) to 0 (waveform output stop request), and then set 1 (waveform output start request) again. • The wave output setting is enabled only when the output mode setting is set to the wave output mode. • If the set value of the target channel is out of the range, o_bErr (error completion) turns on and the processing of the FB is interrupted. In addition, the error code is stored in o_uErrId (error code). For the error code, refer to the list of error codes. (☞ Page 72 Error code)	
FB compilation method	Macro type	
FB operation	Arbitrary execution type	
Timing chart of I/O signals	■When the operation is completed successfully 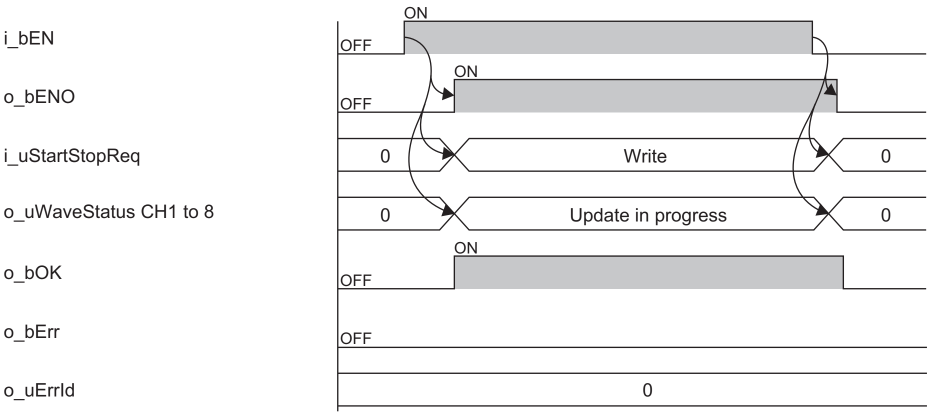 i_bEN o_bENO i_uStartStopReq o_uWaveStatus CH1 to 8 o_bOK o_bErr o_uErrId ON OFF 0 Write Update in progress ■When the operation is completed with an error 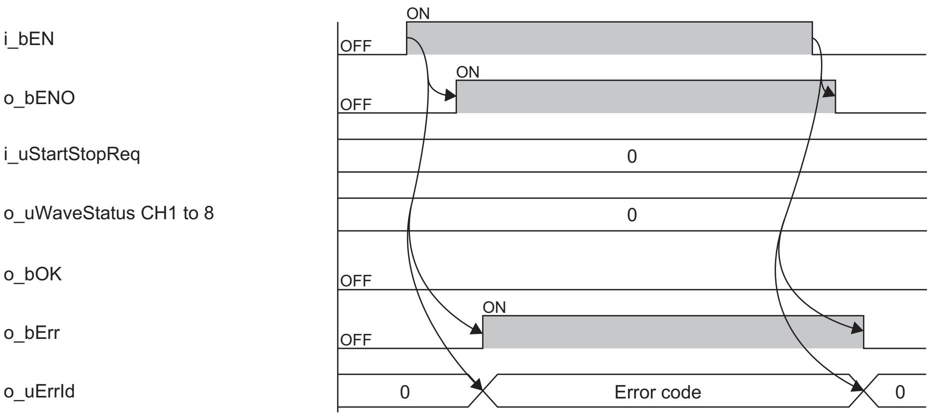 i_bEN o_bENO i_uStartStopReq o_uWaveStatus CH1 to 8 o_bOK o_bErr o_uErrId ON OFF 0 Error code	

Item	Description
Restrictions and precautions	• This FB does not include the error recovery processing. Prepare the error recovery processing separately to suit the user's system and the expected operation. • The FB cannot be used in an interrupt program. • Using the FB in a program that is to be executed only once, such as a subroutine program or a FOR-NEXT loop, has a problem that i_bEN (execution command) can no longer be turned off and normal operation is not possible; Always use the FB in a program that is capable of turning off the execution command. • To use more than one of this FB, care must be taken to avoid duplication of the target channel. • The FB requires the configuration of the ladder for every input label. • Putting a digital-analog converter module into operation requires the output range to be set according to the connected devices and the system in use. Set up the module parameters of GX Works3 according to the application. For how to set up the module parameters, refer to the user's manual of the digital-analog converter module (Application).

Error code

Error code	Description	Action
100H	■R60DA4, R60DAV8, R60DAI8 The target channel is set out of the range. Set the target channel within the following range. • R60DA4: 1 to 4, 15 • R60DAV8/R60DAI8: 1 to 8, 15	Review and correct the setting and then execute the FB again.
	■R60DAH4 The target channel is set out of the range. Set the target channel within the range of 1 to 4 or at 15.	
102H	The module type is set out of the range. Set the module type to the following values. • R60DA4: 0 • R60DAV8: 1 • R60DAI8: 2	Review and correct the setting and then execute the FB again.

APPENDICES

Appendix 1 CSV File Output Format of the FB for Saving Logging Data

The following table shows the format specifications of CSV files output by M+Model_SaveLogging (saving logging data).

Item	Description
Delimiter	Comma (,)
Line feed code	CRLF (0DH, 0AH)
Character code	ASCII
File size	■R60AD4, R60ADV8, R60ADI8 80130 bytes at maximum[*1]
	■R60AD8-G, R60AD16-G, R60AD6-DG 8130 bytes at maximum[*2]
	■R60ADH4 720130 bytes at maximum[*3]

[*1] When the number of logging data is 10000, and all the logging data are negative numbers with five digits, the file size reaches the maximum.

[*2] When the number of logging data is 1000, and all the logging data are negative numbers with five digits, the file size reaches the maximum.

[*3] When the number of logging data is 90000, and all the logging data are negative numbers with five digits, the file size reaches the maximum.

The following figure is an example of how output contents are arranged in the rows and columns after a write to a CSV file.

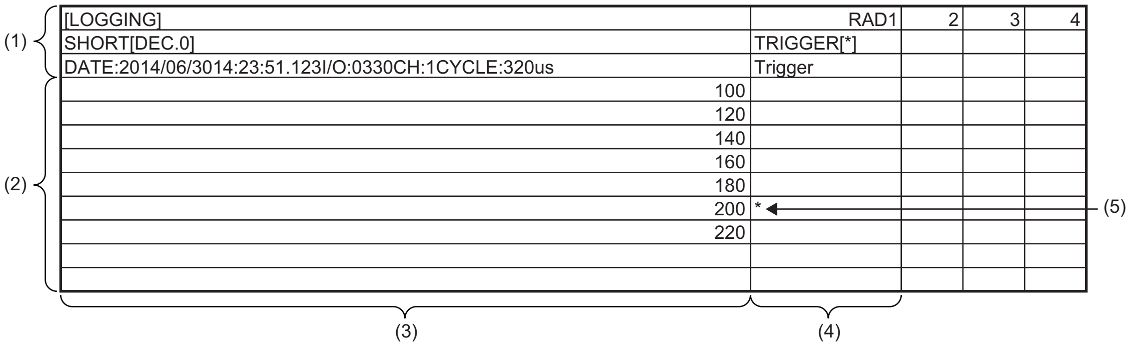

[LOGGING]	RAD1	2	3	4
SHORT[DEC.0]	TRIGGER[*]			
DATE:2014/06/3014:23:51.123I/O:0330CH:1CYCLE:320us	Trigger			
100				
120				
140				
160				
180				
200	*			
220				

(1) Header row
(2) Data row
(3) Data column
(4) Trigger generation information column
(5) Data at hold trigger generation

Header row

The header row contains necessary information used for display on GX LogViewer; do not make any changes.

The file size of the header row is as follows:

- For the R60AD4, R60ADV8, and R60ADI8: 128 bytes (fixed)
- For the R60AD8-G and R60AD16-G: 130 bytes (fixed)
- For the R60ADH4: 128 bytes (fixed)
- For the R60AD6-DG: 128 bytes (fixed)

■File information row

Information related to the CSV file is described in the order shown in the following table.

Column No.	Item	Output content	Size (byte)
Column 1	File type	[LOGGING]	9
Column 2	File version	RAD1 (number indicating the file version)	■R60AD4, R60ADV8, R60ADI8 4
			■R60AD8-G, R60AD16-G 10
			■R60ADH4 4
			■R60AD6-DG 4
Column 3	Data type information row number	2 (number indicating the row number of the data type information row)	1
Column 4	Data name row number	3 (number indicating the row number of the data name row)	1
Column 5	Data start row number	4 (number indicating the row number of the data row)	1[*1]

[*1] At the end of column 5, 4 bytes of NULL are added.

■Data type information row

The data type of each column is written in the order shown in the following table. The data type of each column is output in the format of "Data type""[Added information]".

Column No.	Item	Output content of "Data type"	Size (byte)	Output content of "[Added information]"	Size (byte)
Column 1	Data column	SHORT (signed 16-bit integer specification)	5	[DEC.0] (decimal format specification)	7
Column 2	Trigger generation information column	TRIGGER	7	[*] (specification of the use of "*" as a generated character)	3

■Data name row

The title of each column is written in the order shown in the following table. The data name of each column is output in the format of "Data name":"Added information". (The information written in the data column is shown as a title when the logging data appears on GX LogViewer.)

Column No.	Column name	Output content of "Data name"	Size (byte)	Output content of "[Added information]"	Size (byte)
Column 1	Data column	DATE: [*1]	5	Hold trigger generation time[*2*3]	23
		I/O: [*1]	4	XY address numbers of the module from which logging data is acquired[*4]	4
		CH: [*1]	3	Target channel[*4]	1
		CYCLE: [*1]	6	Logging cycle[*3]	3 to 17
Column 2	Trigger generation information column	Trigger	7	—	7
		—	—	— (NULL)[*5]	1 to 15

*1 A single-width space is inserted between each output item in the data column.

*2 The time is output in the format of YYYY/MM/DD hh:mm:ss.mmm.

*3 The hold trigger generation time and the logging cycle would have the values of CH□ Trigger generation time and CH□ Logging cycle monitor value of the target channel, respectively. A single-width space is inserted between s and ms, and ms and µs in the data of CH□ Logging cycle monitor, respectively. (For example, if either of the R60AD4, R60ADV8, or R60ADI8 has a logging cycle of 3599 seconds, with a target of 3 channel logging, the logging cycle is 3598 seconds 999ms 920µs, which is displayed as "3599s 999ms 920µs".)

*4 XY address numbers and the target channel are the values specified as arguments to the FB for saving logging data.

*5 To fix the size of the header row (128 bytes for the R60AD4, R60ADV8, R60ADI8, R60ADH4, and R60AD6-DG; 130 bytes for the R60AD8-G and R60AD16-G), 1 to 15 bytes of NULL are added at the end of the trigger generation information column.

Data row

Data is written in the order shown in the following table. (This data is the information displayed on GX LogViewer.)

Column name	Output content	Size (byte)
Data column	Logging data stored in the buffer memory of the analog-digital converter module	1 to 6[*1]
Trigger generation information column	*(output only to the row of the logging data to which the trigger pointer points)	0 to 1

*1 If the logging data of the data row to which the trigger pointer points has a size of less than 6 bytes, NULL is output at the end of the logging data to fix the size to 6 bytes.

Appendix 2 Storage Source "Parameter/Data of Waveform Output Function" and Storage Destination Buffer Memory

The following table shows the relationship between the storage source "Parameter/Data of Waveform Output Function" and the storage destination buffer memory handled by M+Model_WaveDataStoreCsv (reading wave data (CSV file)) and M+Model_WaveDataStoreDev (reading wave data (device)).

Save the parameter/data in the table to the file register (ZR) shown in the storage source in advance.

R60DA4, R60DAV8, R60DAI8

The number of channels to be used depends on the module type.

No.[1]	**Parameter/data of the waveform output function**	**Setting range (decimal)**	**CH**	**Storage source**			**Storage destination**
				CSV file in SD memory card		**File register in the serial number access method (ZR) (m: Read start address)**	**Buffer memory of digital-analog converter module (n: First two digits of the three digits representing the start I/O number of the module)**
				Row	**Column**		
1	Output selection during waveform output stop Select the output during wave output stop for each channel.	0: 0V/0mA 1: Offset value 2: Output setting value during waveform output stop	1	1	1	ZR (m+0)	Un\G524
			2	1	2	ZR (m+1)	Un\G724
			3	1	3	ZR (m+2)	Un\G924
			4	1	4	ZR (m+3)	Un\G1124
			5	1	5	ZR (m+4)	Un\G1324
			6	1	6	ZR (m+5)	Un\G1524
			7	1	7	ZR (m+6)	Un\G1724
			8	1	8	ZR (m+7)	Un\G1924
2	Output setting value during waveform output stop When "Output selection during waveform output stop" is set to "2: Output setting value during waveform output stop", set the value to be output for each channel.	• 0 to 32767 (practical range: 0 to 32000)[2] • -32768 to 32767 (practical range: -32000 to 32000)[3]	1	2	1	ZR (m+8)	Un\G525
			2	2	2	ZR (m+9)	Un\G725
			3	2	3	ZR (m+10)	Un\G925
			4	2	4	ZR (m+11)	Un\G1125
			5	2	5	ZR (m+12)	Un\G1325
			6	2	6	ZR (m+13)	Un\G1525
			7	2	7	ZR (m+14)	Un\G1725
			8	2	8	ZR (m+15)	Un\G1925
3	Waveform pattern start address setting Set the start address of the wave pattern to be output for each channel.	10000 to 89999	1	3	1, 2	ZR (m+16, 17)	Un\G526, Un\G527
			2	3	3, 4	ZR (m+18, 19)	Un\G726, Un\G727
			3	3	5, 6	ZR (m+20, 21)	Un\G926, Un\G927
			4	3	7, 8	ZR (m+22, 23)	Un\G1126, Un\G1127
			5	3	9, 10	ZR (m+24, 25)	Un\G1326, Un\G1327
			6	3	11, 12	ZR (m+26, 27)	Un\G1526, Un\G1527
			7	3	13, 14	ZR (m+28, 29)	Un\G1726, Un\G1727
			8	3	15, 16	ZR (m+30, 31)	Un\G1926, Un\G1927
4	Number of waveform pattern points setting Set the number of data points of the wave pattern to be output for each channel.	1 to 80000 (point)	1	4	1, 2	ZR (m+32, 33)	Un\G528, Un\G529
			2	4	3, 4	ZR (m+34, 35)	Un\G728, Un\G729
			3	4	5, 6	ZR (m+36, 37)	Un\G928, Un\G929
			4	4	7, 8	ZR (m+38, 39)	Un\G1128, Un\G1129
			5	4	9, 10	ZR (m+40, 41)	Un\G1328, Un\G1329
			6	4	11, 12	ZR (m+42, 43)	Un\G1528, Un\G1529
			7	4	13, 14	ZR (m+44, 45)	Un\G1728, Un\G1729
			8	4	15, 16	ZR (m+46, 47)	Un\G1928, Un\G1929

No.[1]	Parameter/data of the waveform output function	Setting range (decimal)	CH	Storage source			Storage destination
				CSV file in SD memory card		File register in the serial number access method (ZR) (m: Read start address)	Buffer memory of digital-analog converter module (n: First two digits of the three digits representing the start I/O number of the module)
				Row	Column		
5	Number of waveform outputs setting Set the number of output times of the wave pattern for each channel.	• -1: Infinite repetition output • 1 to 32767: Specified number of times output	1	5	1	ZR (m+48)	Un\G530
			2	5	2	ZR (m+49)	Un\G730
			3	5	3	ZR (m+50)	Un\G930
			4	5	4	ZR (m+51)	Un\G1130
			5	5	5	ZR (m+52)	Un\G1330
			6	5	6	ZR (m+53)	Un\G1530
			7	5	7	ZR (m+54)	Un\G1730
			8	5	8	ZR (m+55)	Un\G1930
6	Waveform output conversion cycle constant Set the constant used to determine the conversion cycle for each channel. (Specify a multiple of the conversion speed.)	1 to 5000	1	6	1	ZR (m+56)	Un\G531
			2	6	2	ZR (m+57)	Un\G731
			3	6	3	ZR (m+58)	Un\G931
			4	6	4	ZR (m+59)	Un\G1131
			5	6	5	ZR (m+60)	Un\G1331
			6	6	6	ZR (m+61)	Un\G1531
			7	6	7	ZR (m+62)	Un\G1731
			8	6	8	ZR (m+63)	Un\G1931
7	Number of wave data points Set the total number of the wave data points.	80000 (point)	—	100	1, 2	ZR (m+98, 99)	—
8	Wave data	-32768 to 32767 (practical range: -32000 to 32000)	—	101 to 80100	1	ZR (m+100) to ZR (m+80099)	Un\G10000 to Un\G89999

[1] No.1 to No.8 correspond to the No.1 to No.8 described in the following page. For details on each item, refer to the following:
☞ Page 79 Contents of rows and columns in a CSV file

[2] When a digital-analog converter module has an output range of 0 to 5V, 1 to 5V, 0 to 20mA, or 4 to 20mA.

[3] When a digital-analog converter module has an output range of -10 to 10V.

R60DAH4

No.[*1]	Parameter/data of the waveform output function	Setting range (decimal)	CH	Storage source			Storage destination
				CSV file in SD memory card		File register in the serial number access method (ZR) (m: Read start address)	Buffer memory of digital-analog converter module (n: First two digits of the three digits representing the start I/O number of the module)
				Row	Column		
1	Output selection during waveform output stop Select the output during wave output stop for each channel.	0: 0V/0mA 1: Offset value 2: Output setting value during waveform output stop	1	1	1	ZR (m+0)	Un\G524
			2	1	2	ZR (m+1)	Un\G724
			3	1	3	ZR (m+2)	Un\G924
			4	1	4	ZR (m+3)	Un\G1124
2	Output setting value during waveform output stop When "Output selection during waveform output stop" is set to "2: Output setting value during waveform output stop", set the value to be output for each channel.	• 0 to 32767 (practical range: 0 to 32000)[*2] • -32768 to 32767 (practical range: -32000 to 32000)[*3]	1	2	1	ZR (m+8)	Un\G525
			2	2	2	ZR (m+9)	Un\G725
			3	2	3	ZR (m+10)	Un\G925
			4	2	4	ZR (m+11)	Un\G1125
3	Waveform pattern start address setting Set the start address of the wave pattern to be output for each channel.	10000 to 99999	1	3	1, 2	ZR (m+16, 17)	Un\G526, Un\G527
			2	3	3, 4	ZR (m+18, 19)	Un\G726, Un\G727
			3	3	5, 6	ZR (m+20, 21)	Un\G926, Un\G927
			4	3	7, 8	ZR (m+22, 23)	Un\G1126, Un\G1127
4	Number of waveform pattern points setting Set the number of data points of the wave pattern to be output for each channel.	1 to 90000 (point)	1	4	1, 2	ZR (m+32, 33)	Un\G528, Un\G529
			2	4	3, 4	ZR (m+34, 35)	Un\G728, Un\G729
			3	4	5, 6	ZR (m+36, 37)	Un\G928, Un\G929
			4	4	7, 8	ZR (m+38, 39)	Un\G1128, Un\G1129
5	Number of waveform outputs setting Set the number of output times of the wave pattern for each channel.	• -1: Infinite repetition output • 1 to 32767: Specified number of times output	1	5	1	ZR (m+48)	Un\G530
			2	5	2	ZR (m+49)	Un\G730
			3	5	3	ZR (m+50)	Un\G930
			4	5	4	ZR (m+51)	Un\G1130
6	Waveform output conversion cycle constant Set the constant used to determine the conversion cycle for each channel. (Specify a multiple of the conversion speed.)	1 to 5000	1	6	1	ZR (m+56)	Un\G531
			2	6	2	ZR (m+57)	Un\G731
			3	6	3	ZR (m+58)	Un\G931
			4	6	4	ZR (m+59)	Un\G1131
7	Number of wave data points Set the total number of the wave data points.	90000 (point)	—	100	1, 2	ZR (m+98, 99)	—
8	Wave data	-32768 to 32767 (practical range: -32000 to 32000)	—	101 to 90100	1	ZR (m+100) to ZR (m+90099)	Un\G10000 to Un\G99999

[*1] No.1 to No.8 correspond to the No.1 to No.8 described in the following page. For details on each item, refer to the following:
☞ Page 79 Contents of rows and columns in a CSV file

[*2] When a digital-analog converter module has an output range of 0 to 5V, 1 to 5V, 0 to 20mA, or 4 to 20mA.

[*3] When a digital-analog converter module has an output range of -10 to 10V.

Appendix 3 CSV File Format of the FB for Reading Wave Data (CSV File)

The CSV file formats which M+Model_WaveDataStoreCsv (reading wave data (CSV file)) can handle are shown as follows.

Specifications of CSV format

Item	Description
Delimiter	Comma (,)
Line feed code	CRLF (0DH, 0AH)
Character code	ASCII or Shift JIS

CSV file name

The number of characters of the CSV file name must be 64 or less including the extension ".CSV".

Ex.

R60DA_1.csv, wd000001.csv, WAVEdata.csv

Contents of rows and columns in a CSV file

The following figure is an example of how a CSV file contains data in its rows and columns. Note that the following figure shows the case for the maximum number of wave data.

■R60DA4, R60DAV8, R60DAI8

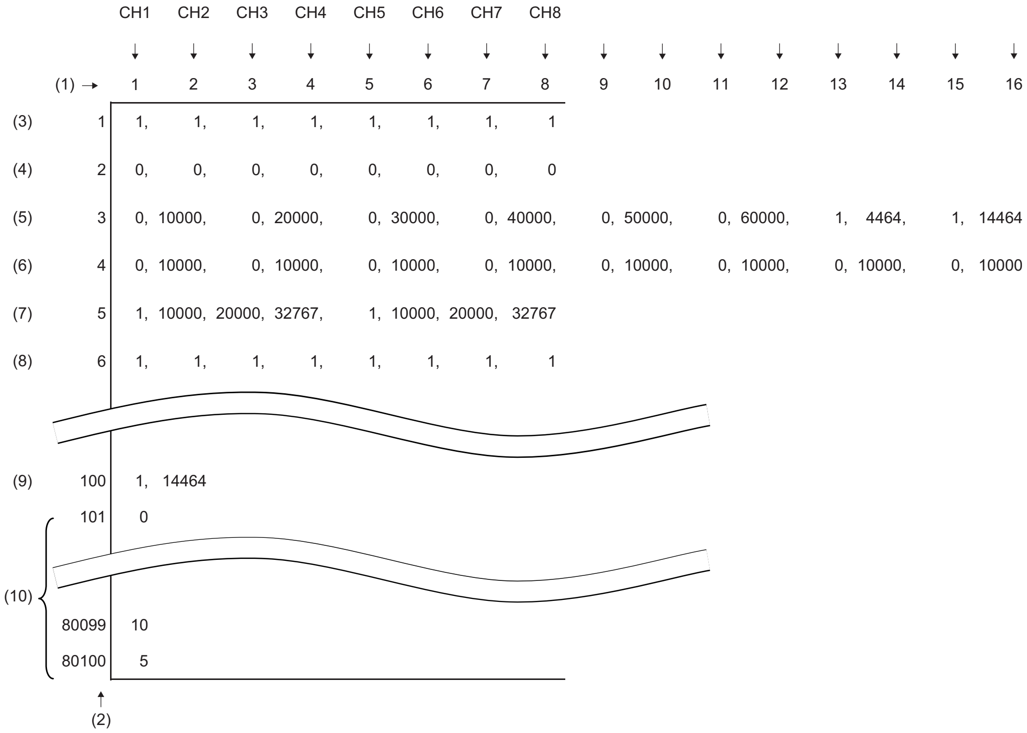

```
              CH1  CH2    CH3    CH4    CH5  CH6    CH7    CH8
               ↓    ↓      ↓      ↓      ↓    ↓      ↓      ↓      ↓    ↓      ↓    ↓      ↓    ↓      ↓    ↓
     (1) →     1    2      3      4      5    6      7      8      9    10     11   12     13   14     15   16
(3)        1 | 1,   1,     1,     1,     1,   1,     1,     1
(4)        2 | 0,   0,     0,     0,     0,   0,     0,     0
(5)        3 | 0,   10000, 0,     20000, 0,   30000, 0,     40000, 0,   50000, 0,   60000, 1,   4464,  1,   14464
(6)        4 | 0,   10000, 0,     10000, 0,   10000, 0,     10000, 0,   10000, 0,   10000, 0,   10000, 0,   10000
(7)        5 | 1,   10000, 20000, 32767, 1,   10000, 20000, 32767
(8)        6 | 1,   1,     1,     1,     1,   1,     1,     1

(9)      100 | 1,   14464
         101 | 0
(10)
       80099 | 10
       80100 | 5
           ↑
          (2)
```

(1) Column

(2) Row

(3) No.1 Output selection during waveform output stop[*1][*2]

(4) No.2 Output setting value during waveform output stop[*1][*2]

(5) No.3 Waveform pattern start address setting[*1][*2]

(6) No.4 Number of waveform pattern points setting[*1][*2]

(7) No.5 Number of waveform outputs setting[*1][*2]

(8) No.6 Waveform output conversion cycle constant[*1][*2]

(9) No.7 Number of wave data points[*1][*2]

(10)No.8 Waveform data[*1][*2]

*1 No.1 to No.8 correspond to the No.1 to No.8 described in the following page. For details on each item, refer to the following:
☞ Page 76 Storage Source "Parameter/Data of Waveform Output Function" and Storage Destination Buffer Memory

*2 Always make settings for eight channels regardless of the number of channels of the digital-analog converter module.

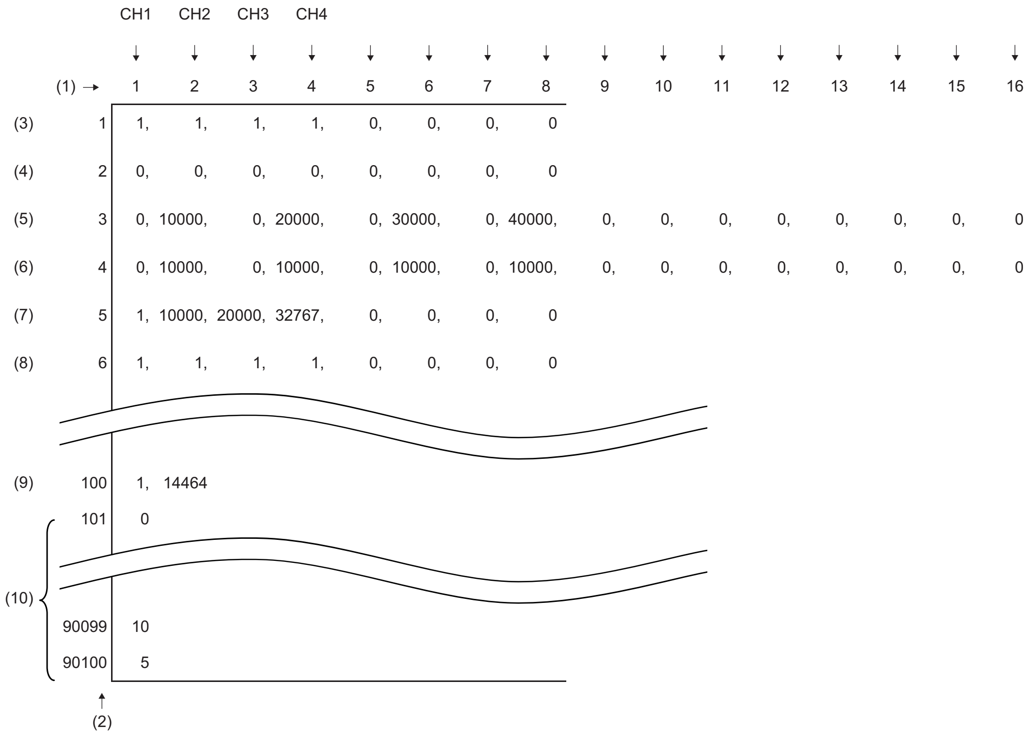

CH1
CH2
CH3
CH4
(1)
1
2
3
4
5
6
7
8
9
10
11
12
13
14
15
16
(3) 1 1, 1, 1, 1, 0, 0, 0, 0
(4) 2 0, 0, 0, 0, 0, 0, 0, 0
(5) 3 0, 10000, 0, 20000, 0, 30000, 0, 40000, 0, 0, 0, 0, 0, 0, 0, 0
(6) 4 0, 10000, 0, 10000, 0, 10000, 0, 10000, 0, 0, 0, 0, 0, 0, 0, 0
(7) 5 1, 10000, 20000, 32767, 0, 0, 0, 0
(8) 6 1, 1, 1, 1, 0, 0, 0, 0
(9) 100 1, 14464
101 0
(10)
90099 10
90100 5
(2)

(1) Column
(2) Row
(3) No.1 Output selection during waveform output stop[*1*2]
(4) No.2 Output setting value during waveform output stop[*1*2]
(5) No.3 Waveform pattern start address setting[*1*2]
(6) No.4 Number of waveform pattern points setting[*1*2]
(7) No.5 Number of waveform outputs setting[*1*2]
(8) No.6 Waveform output conversion cycle constant[*1*2]
(9) No.7 Number of wave data points[*1*2]
(10)No.8 Waveform data[*1*2]

[*1] No.1 to No.8 correspond to the No.1 to No.8 described in the following page. For details on each item, refer to the following:
☞ Page 76 Storage Source "Parameter/Data of Waveform Output Function" and Storage Destination Buffer Memory

[*2] Always make settings for eight channels.

INSTRUCTION INDEX

M

M+R60ADDG_OperateError 6
M+R60ADDG_RequestSetting 4
M+R60ADDG_SaveLogging 15
M+R60ADDG_SetLoggingParam 9
M+R60ADG_OperateError 6
M+R60ADG_RequestSetting 4
M+R60ADG_SaveLogging 15
M+R60ADG_SetLoggingParam 9
M+R60ADHART_HARTCommandRequest 49
M+R60ADHART_OperateError 6
M+R60ADHART_RefreshHARTDeviceInfo 46
M+R60ADHART_RequestSetting 4
M+R60ADH_ContinuousLoggingRequest 23
M+R60ADH_HighSpeedContinuousLoggingRequest
. . . . 32
M+R60ADH_OperateError 6
M+R60ADH_ReadContinuousLogging 26
M+R60ADH_ReadHighSpeedContinuousLogging 35
M+R60ADH_RequestSetting 4
M+R60ADH_SaveHighSpeedLogging 42
M+R60ADH_SaveLogging 15
M+R60ADH_SetContinuousLoggingParam 20
M+R60ADH_SetHighSpeedContinuousLoggingParam
. . . . 29
M+R60ADH_SetHighSpeedLoggingParam 39
M+R60ADH_SetLoggingParam 9
M+R60AD_OperateError 6
M+R60AD_RequestSetting 4
M+R60AD_SaveLogging 15
M+R60AD_SetLoggingParam 9
M+R60DAG16_OperateError 55
M+R60DAG16_RequestSetting 53
M+R60DAG_OperateError 55
M+R60DAG_RequestSetting 53
M+R60DAH_OperateError 55
M+R60DAH_RequestSetting 53
M+R60DAH_WaveDataStoreCsv 61
M+R60DAH_WaveDataStoreDev 66
M+R60DAH_WaveOutputReqSetting 69
M+R60DAH_WaveOutputSetting 57
M+R60DA_OperateError 55
M+R60DA_RequestSetting 53
M+R60DA_WaveDataStoreCsv 61
M+R60DA_WaveDataStoreDev 66
M+R60DA_WaveOutputReqSetting 69
M+R60DA_WaveOutputSetting 57

MEMO

REVISIONS

*The manual number is given on the bottom left of the back cover.

Revision date	*Manual number	Description
June 2014	BCN-P5999-0375-A	First edition
January 2015	BCN-P5999-0375-B	■Added models R60AD8-G, R60AD16-G, R60DA8-G, R60DA16-G ■Added or modified parts Chapter 1, Section 2.1, 2.2, 2.3, 2.4, 3.1, 3.2, 3.3, Appendix 1, 2
January 2016	BCN-P5999-0375-C	■Added model R60ADH4 ■Added or modified parts Chapter 1, Section 2.1 to 2.7, 3.1 to 3.6, Appendix 1, 3
January 2017	BCN-P5999-0375-D	■Added model R60DAH4 ■Added or modified parts Chapter 1, Section 2.1 to 2.7, 3.1 to 3.6, Appendix 2, 3
October 2017	BCN-P5999-0375-E	■Added or modified parts Chapter 1, Section 2.3, 2.8, 2.9, 2.10
April 2018	BCN-P5999-0375-F	■Added or modified parts Chapter 1, Section 2.11, 2.12
October 2018	BCN-P5999-0375-G	■Added or modified parts Chapter 1, Section 2.1, 2.2, 2.13, 2.14
May 2020	BCN-P5999-0375-H	■Added model R60AD6-DG ■Added or modified parts Chapter 1, Section 2.1 to 2.4, 2.9 to 2.14, Appendix 1

Japanese manual number: BCN-P5999-0365-H

This manual confers no industrial property rights of any other kind, nor does it confer any patent licenses. Mitsubishi Electric Corporation cannot be held responsible for any problems involving industrial property rights which may occur as a result of using the contents noted in this manual.

© 2014 MITSUBISHI ELECTRIC CORPORATION

TRADEMARKS

The company names, system names and product names mentioned in this manual are either registered trademarks or trademarks of their respective companies.
In some cases, trademark symbols such as '™' or '®' are not specified in this manual.

BCN-P5999-0375-H(2005)

MITSUBISHI ELECTRIC CORPORATION

HEAD OFFICE : TOKYO BUILDING, 2-7-3 MARUNOUCHI, CHIYODA-KU, TOKYO 100-8310, JAPAN
NAGOYA WORKS : 1-14 , YADA-MINAMI 5-CHOME , HIGASHI-KU, NAGOYA , JAPAN

When exported from Japan, this manual does not require application to the
Ministry of Economy, Trade and Industry for service transaction permission.

Specifications subject to change without notice.