MITSUBISHI ELECTRIC

MELSERVO-J4 series

Encoder converter

Specification Manual

MR-ENCOM

Art. no. 275742
24 06 2014
Version A

MITSUBISHI ELECTRIC INDUSTRIAL AUTOMATION

Version check

Contents

1 Introduction

1.1 Summary 1-1
1.2 Function block diagram 1-1
1.3 Product names 1-1

2 Standard specifications

2.1 Specification table 2-1
2.2 Recommended encoder 2-1
2.2.1 Hiperface DSL 2-1
2.2.2 Endat 2.2 2-1
2.3 Dimensions [mm] 2-2
2.4 Installation 2-3
2.4.1 Installation direction and clearances 2-3
2.4.2 Keep out foreign materials 2-3
2.4.3 Cable stress 2-3
2.5 Signals and wiring 2-4
2.5.1 LEDs 2-4
2.5.2 Connectors and pin assignment 2-4
2.5.3 Cables 2-5

3 Operation

3.1 Start-up 3-1
3.2 Troubleshooting 3-1

1 Introduction

1.1 Summary

MR-ENCOM is a converter from Endat2.2/Hiperface DSL to Mitsubishi Electric serial encoder communication, which is compatible to both Endat2.2 and Hiperface DSL, by changing an external wiring.

Although Mitsubishi Electric MELSERVO-J4 series have compatible rotary/linear servo motors also made by Mitsubishi Electric, by using MR-ENCOM, other suppliers' rotary/linear servo motors can be driven by MELSERVO-J4.

Mitsubishi Electric MELSERVO-J4 series that has industry leading function and performance such as response, tuning, filters, and maintenance can drive any other manufacturers servo motors with Endat 2.2 or Hiperface DSL (*).

* Please contact Mitsubishi Electric Europe to check if servo motor and encoder are supported..

1.2 Function block diagram

The below diagram shows the MR-ENCOM in combination with a servo amplifier and servo motor. For more details about amplifiers and motors please refer to the MR-J4 users manual.

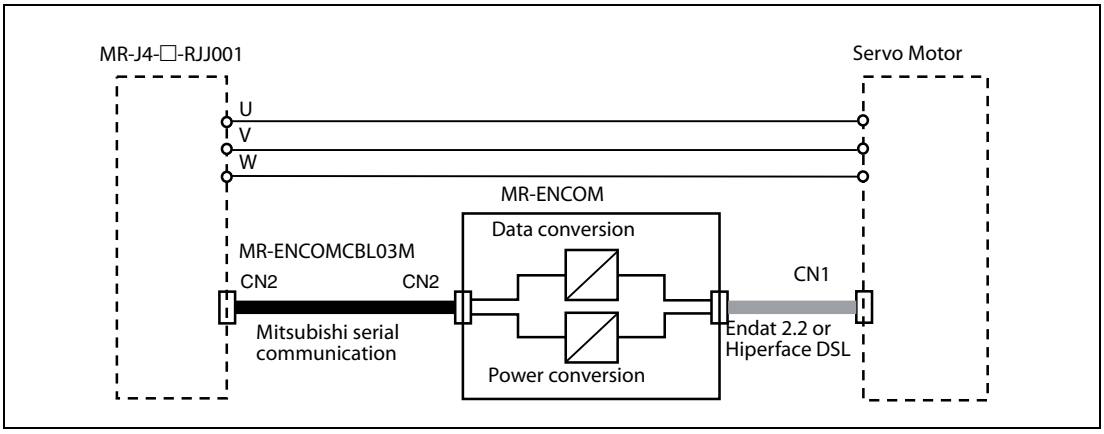

1.3 Product names

No.	Product name		Description
1	MR-ENCOMSET	MR-ENCOM	Endat2.2/Hiperface DSL Encoder converter
2		MR-ENCOMCBL03M	Cable between MR-ENCOM and MR-J4-□-RJJ001
3	*		Cable between MR-ENCOM and servo motor

* The cable should be prepared by the user.

2 Standard specifications

2.1 Specification table

Communication	Endat2.1 (without analog signals and sense signal), Endat 2.2 (without safety function), Hiperface DSL (without safety function)
Absolut /Incremental	Both
Rotary/Linear	Both
Resolution	10–40 bit
Rated output voltage	10 ±0,3 V (at CN1 connector)
Max. continuous output current	200 mA
IP ratings	IP30
Ambient temperature	0° – +55°C, non-freezing
Storage temperature	-20° – +70°C, non-freezing
Humidity	90 % rel. humidity, no condensation
Ambience	Indoors (no direct sunlight); no corrosive gas, inflammable gas, oil mist or dust
Altitude	3000 m or less above sea level
Mass	250 g

2.2 Recommended encoder

2.2.1 Hiperface DSL

- Only 2 wire connection (DSL+/-) type is possible to communicate to MR-ENCOM.
- Both single turn and multi turn encoders are compatible.
- Safety function is not compatible.

2.2.2 Endat 2.2

- Endat2.2 or Endat2.1
- 6 MHz clock frequency should be compatible.
- Incremental signal 1 Vpp of the Endat communication is not possible to connect to MR-ENCOM. Use encoder without incremental signal.
- Both single turn and multi turn encoders are compatible.
- Safety function is not compatible.
- 10 V DC power supply is compatible. In case of an encoder which has only 5 V DC, use "+5 V OUT" for the power supply instead of "+10 V OUT".

2.3 Dimensions [mm]

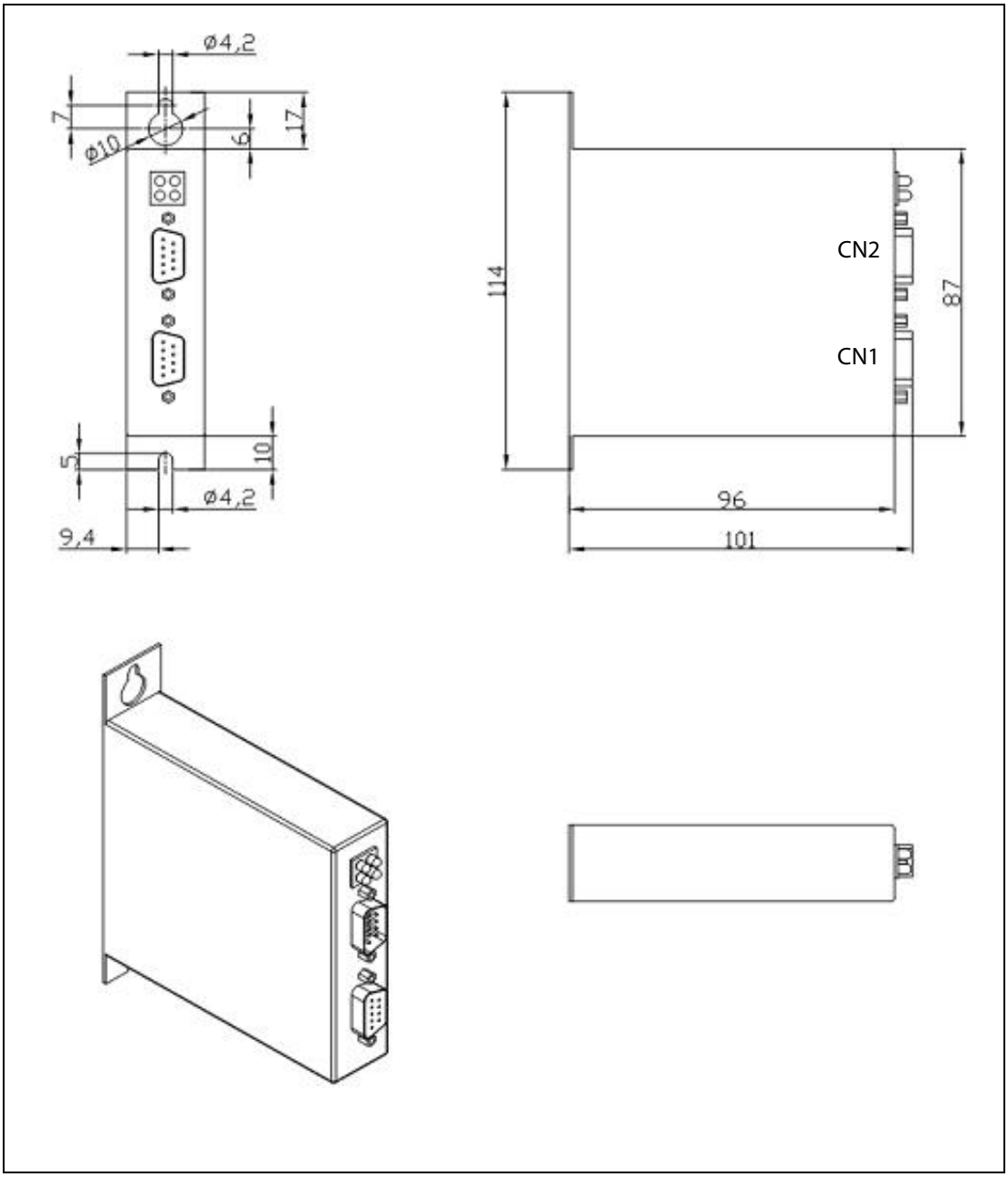

Fig. 2-1: *Dimensions of the MR-ENCOM*

2.4 Installation

2.4.1 Installation direction and clearances

NOTE Keep 10 mm distance from other components and cabinet.

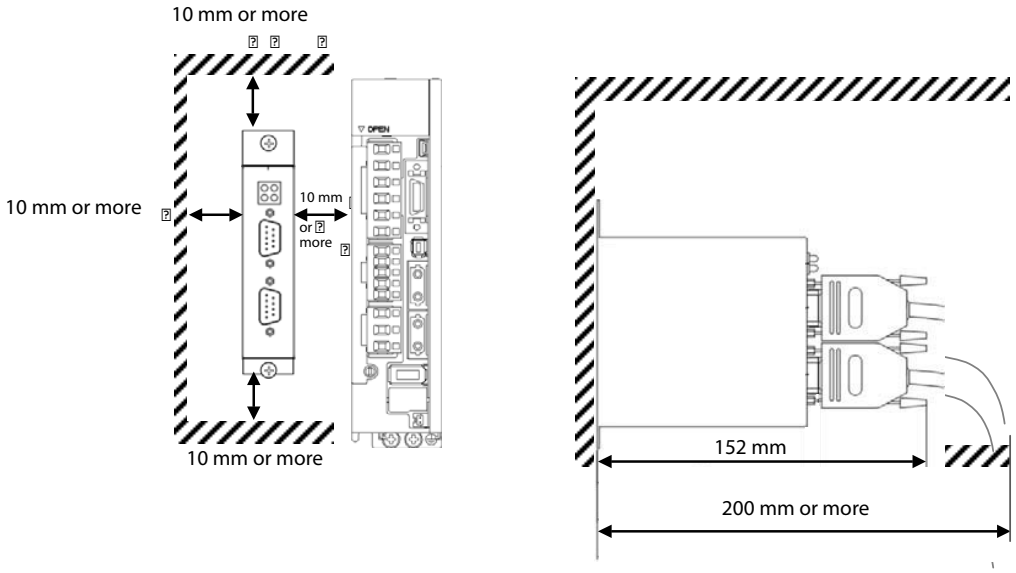

Fig. 2-2: *Installation of the MR-ENCOM*

2.4.2 Keep out foreign materials

- When drilling in the cabinet, prevent drill chips and wire fragments from entering the servo amplifier.
- Prevent oil, water, metallic dust, etc. from entering the servo amplifier through openings in the cabinet or a cooling fan installed on the ceiling.
- When installing the cabinet in a place where toxic gas, dirt and dust exist, conduct an air purge (force clean air into the cabinet from outside to make the internal pressure higher than the external pressure) to prevent such materials from entering the cabinet.

2.4.3 Cable stress

- The way of clamping the cable must be fully examined so that bending stress and cable's own weight stress are not applied to the cable connection.
- For use in any application where the servo motor moves, fix the cables (encoder, power supply, and brake) with having some slack from the connector connection part of the servo motor to avoid putting stress on the connector connection part. Use the optional encoder cable within the bending life range. Use the power supply and brake wiring cables within the bending life of the cables.
- Avoid any probability that the cable sheath might be cut by sharp chips, rubbed by a machine corner or stamped by workers or vehicles.
- For installation on a machine where the servo motor moves, the bending radius should be made as large as possible. Refer to section 10.4 for the bending life.

2.5 Signals and wiring

2.5.1 LEDs

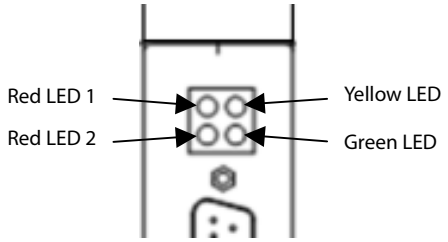

LED	ON status	Description
Red LED 1	CPU error	CPU malfunction
Red LED 2	Communication error	Communication is not well
Yellow LED	Hiperface setting	CN1 wiring is Hiperface setting
Green LED	Endat setting	CN1 wiring is Endat setting

2.5.2 Connectors and pin assignment

- CN1 (male: to encoder)

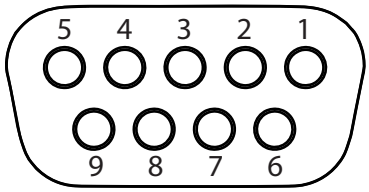

Direction looking at product

Pin No.	Signal	
	Hiperface DSL	Endat 2.2
1	—	+10 V OUT
2	DSL+	—
3	—	DATA+
4	—	CLOCK+
5	—	GND
6	—	SELECT_Endat
7	DSL-	—
8	—	DATA-
9	—	CLOCK-

* In case of Endat 2.2 connect the pin No. 6 “SELECT_Endat” to pin No. 5 “GND”. Otherwise MR-ENCOM recognize as Hiperface DSL communication. See cable wiring diagram for example.

- CN2 (female: to MELSERVO J4)

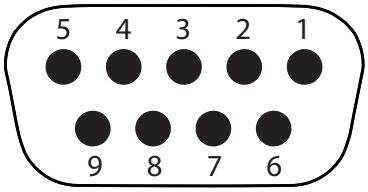

Direction looking at product

Pin No.	Signal
1	P5
2	P5
3	MR
4	—
5	—
6	LG
7	LG
8	MRR
9	—

2.5.3 Cables

- Between MR-ENCOM CN1 and Hiperface DSL encoder

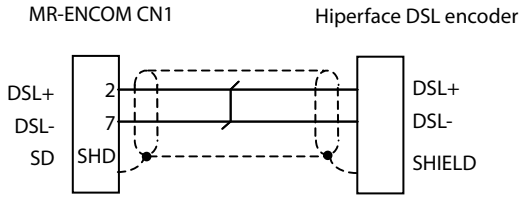

- Between MR-ENCOM CN1 and Endat 2.2/2.1 encoder

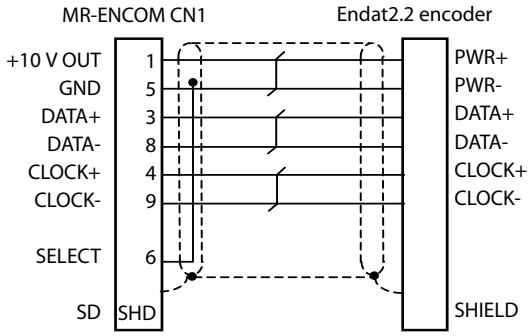

● Between MR-ENCOM CN2 and MELSERVO J4 (2 wire) (MR-ENCOMCBL□M)

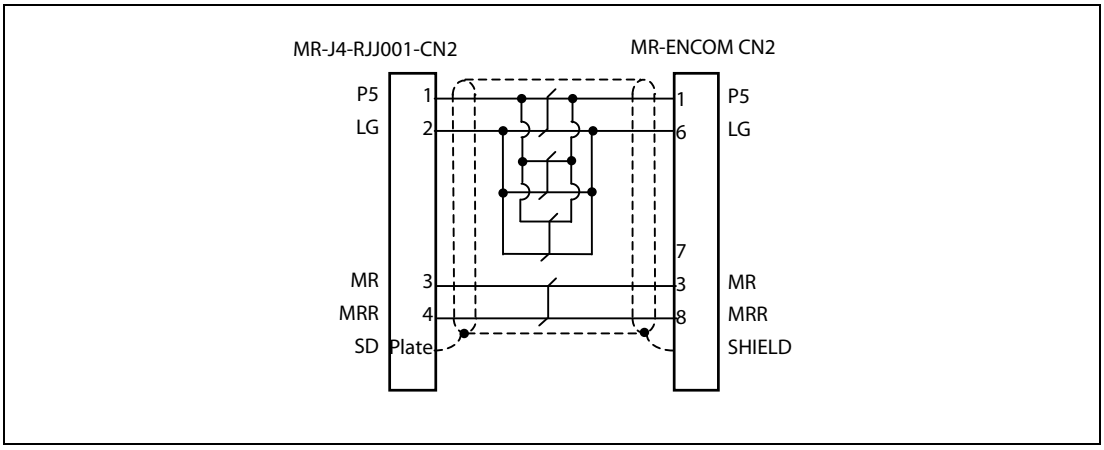

3 Operation

3.1 Start-up

- Amplifier parameter setting
  - Open the software tool provided by Mitsubishi Electric
  - Type in the particular motor constant in the software tool. The motor constant should be provided by the motor manufacturer.
  - Download the parameters to the servo amplifier from the tool. Don't forget to make a power reset of the amplifier to make the setting valid.
- Connect all cables
  - Power ON and check if everything is all right.
  - Check if either the Yellow (Hiperface) or the Green (Endat) LED is ON, corresponding to the encoder communication.
  - Move the motor by hand or JOG, to check if the encoder data is correct.

3.2 Troubleshooting

- When red LED 1 (CPU error) is on
  - MR-ENCOM malfunction
- When red LED 2 (Communication error) is on
  - Encoder malfunction
  - MR-ENCOM malfunction
  - Amplifier malfunction
  - Cable malfunction
- When Hiperface/Endat LED is NOT on, even user connect the encoder
  - Encoder malfunction
  - MR-ENCOM malfunction
  - Cable malfunction
- When servo amplifier alarm is there
  - The corresponding alarm or warning is displayed on the amplifer
  - Refer to "MELSERVO-J4 Servo Amplifier Instruction Manual (Troubleshooting)" for details of alarms and warnings
  - Start MR Configurator2 and connect to the ampifier via USB to get detailed alarm information
- When communication is OK, but servo motor doesn't run smoothly
  - Servo amplifier parameter setting (motor constant, gain)may be wrong
  - Noise

HEADQUARTERS

Mitsubishi Electric Europe B.V. **EUROPE**
Gothaer Straße 8
D-40880 Ratingen
Phone: +49 (0)2102 / 486-0
Fax: +49 (0)2102 / 486-1120

Mitsubishi Electric Europe B.V. **CZECH REP.**
Radlická 751/113e Avenir Business Park
CZ-158 00 Praha 5
Phone: +420 251 551 470
Fax: +420 251 551 471

Mitsubishi Electric Europe B.V. **FRANCE**
25, Boulevard des Bouvets
F-92741 Nanterre Cedex
Phone: +33 (0)1 / 55 68 55 68
Fax: +33 (0)1 / 55 68 57 57

Mitsubishi Electric Europe B.V. **IRELAND**
Westgate Business Park, Ballymount
IRL-Dublin 24
Phone: +353 (0)1 4198800
Fax: +353 (0)1 4198890

Mitsubishi Electric Europe B.V. **ITALY**
Viale Colleoni 7 Palazzo Sirio
I-20864 Agrate Brianza (MB)
Phone: +39 039 / 60 53 1
Fax: +39 039 / 60 53 312

Mitsubishi Electric Europe B.V. **NETHERLANDS**
Nijverheidsweg 23a
NL-3641RP Mijdrecht
Phone: +31 (0) 297250350

Mitsubishi Electric Europe B.V. **POLAND**
ul. Krakowska 50
PL-32-083 Balice
Phone: +48 (0) 12 630 47 00
Fax: +48 (0) 12 630 47 01

Mitsubishi Electric Europe B.V. **RUSSIA**
52, bld. 3 Kosmodamianskaya nab 8 floor
RU-115054 Moscow
Phone: +7 495 / 721 2070
Fax: +7 495 / 721 2071

Mitsubishi Electric Europe B.V. **SPAIN**
Carretera de Rubí 76-80 Apdo. 420
E-08190 Sant Cugat del Vallés (Barcelona)
Phone: +34 (0) 93 / 5653131
Fax: +34 (0) 93 / 5891579

Mitsubishi Electric Europe B.V. (Scandinavia) **SWEDEN**
Fjelievägen 8
SE-22736 Lund
Phone: +46 (0) 8 625 10 00
Fax: +46 (0) 46 39 70 18

Mitsubishi Electric Turkey Elektrik Ürünleri A.Ş. **TURKEY**
Fabrika Otomasyonu Merkezi
Şerifali Mahallesi Nutuk Sokak No.5
TR-34775 Ümraniye-İSTANBUL
Phone: +90 (0)216 / 526 39 90
Fax: +90 (0)216 / 526 39 95

Mitsubishi Electric Europe B.V. **UK**
Travellers Lane
UK-Hatfield, Herts. AL10 8XB
Phone: +44 (0)1707 / 28 87 80
Fax: +44 (0)1707 / 27 86 95

Mitsubishi Electric Europe B.V. **UAE**
Dubai Silicon Oasis
United Arab Emirates - Dubai
Phone: +971 4 3724716
Fax: +971 4 3724721

Mitsubishi Electric Corporation **JAPAN**
Tokyo Building 2-7-3
Marunouchi, Chiyoda-ku
Tokyo 100-8310
Phone: +81 (3) 3218-2111
Fax: +81 (3) 3218-2185

Mitsubishi Electric Automation, Inc. **USA**
500 Corporate Woods Parkway
Vernon Hills, IL 60061
Phone: +1 (847) 478-2100
Fax: +1 (847) 478-0328

EUROPEAN REPRESENTATIVES

GEVA **AUSTRIA**
Wiener Straße 89
A-2500 Baden
Phone: +43 (0)2252 / 85 55 20
Fax: +43 (0)2252 / 488 60

OOO TECHNIKON **BELARUS**
Prospect Nezavisimosti 177-9
BY-220125 Minsk
Phone: +375 (0)17 / 393 1177
Fax: +375 (0)17 / 393 0081

ESCO DRIVES **BELGIUM**
Culliganlaan 3
BE-1831 Diegem
Phone: +32 (0)2 / 717 64 60
Fax: +32 (0)2 / 717 64 61

KONING & HARTMAN B.V. **BELGIUM**
Woluwelaan 31
BE-1800 Vilvoorde
Phone: +32 (0)2 / 257 02 40
Fax: +32 (0)2 / 257 02 49

INEA RBT d.o.o. **BOSNIA AND HERZEGOVINA**
Stegne 11
SI-1000 Ljubljana
Phone: +386 (0)1/ 513 8116
Fax: +386 (0)1/ 513 8170

AKHNATON **BULGARIA**
4, Andrei Ljapchev Blvd., PO Box 21
BG-1756 Sofia
Phone: +359 (0)2 / 817 6000
Fax: +359 (0)2 / 97 44 06 1

INEA CR **CROATIA**
Losinjska 4 a
HR-10000 Zagreb
Phone: +385 (0)1 / 36 940 - 01/ -02/ -03
Fax: +385 (0)1 / 36 940 - 03

AutoCont C. S. S.R.O. **CZECH REPUBLIC**
Kafkova 1853/3
CZ-702 00 Ostrava 2
Phone: +420 595 691 150
Fax: +420 595 691 199

Beijer Electronics A/S **DENMARK**
Lykkegardsvej 17
DK-4000 Roskilde
Phone: +45 (0)46/ 75 76 66
Fax: +45 (0)46 / 75 56 26

HANS FØLSGAARD A/S **DENMARK**
Theilgaards Torv 1
DK-4600 Køge
Phone: +45 4320 8600
Fax: +45 4396 8855

Beijer Electronics Eesti OÜ **ESTONIA**
Pärnu mnt.160i
EE-11317 Tallinn
Phone: +372 (0)6 / 51 81 40
Fax: +372 (0)6 / 51 81 49

Beijer Electronics OY **FINLAND**
Vanha Nurmijärventie 62
FIN-01670 Vantaa
Phone: +358 (0)207 / 463 500
Fax: +358 (0)207 / 463 501

PROVENDOR OY **FINLAND**
Teljänkatu 8 A3
FIN-28130 Pori
Phone: +358 (0) 2 / 522 3300
Fax: +358 (0) 2 / 522 3322

UTECO A.B.E.E. **GREECE**
5, Mavrogenous Str.
GR-18542 Piraeus
Phone: +30 (0)211 / 1206-900
Fax: +30 (0)211 / 1206-999

MELTRADE Kft. **HUNGARY**
Fertő utca 14.
HU-1107 Budapest
Phone: +36 (0)1 / 431-9726
Fax: +36 (0)1 / 431-9727

EUROPEAN REPRESENTATIVES

Beijer Electronics SIA **LATVIA**
Ritausmas iela 23
LV-1058 Riga
Phone: +371 (0)6 / 784 2280
Fax: +371 (0)6 / 784 2281

Beijer Electronics UAB **LITHUANIA**
Goštautų g. 3
LT-48324 Kaunas
Phone: +370 37 262707
Fax: +370 37 455605

ALFATRADE Ltd. **MALTA**
99, Paola Hill
Malta-Paola PLA 1702
Phone: +356 (0)21 / 697 816
Fax: +356 (0)21 / 697 817

INTEHSIS SRL **MOLDOVA**
bld. Traian 23/1
MD-2060 Kishinev
Phone: +373 (0)22 / 66 4242
Fax: +373 (0)22 / 66 4280

HIFLEX AUTOM. B.V. **NETHERLANDS**
Wolweverstraat 22
NL-2984 CD Ridderkerk
Phone: +31 (0)180 / 46 60 04
Fax: +31 (0)180 / 44 23 55

KONING & HARTMAN B.V. **NETHERLANDS**
Haarlerbergweg 21-23
NL-1101 CH Amsterdam
Phone: +31 (0)20 / 587 76 00
Fax: +31 (0)20 / 587 76 05

Beijer Electronics AS **NORWAY**
Postboks 487
NO-3002 Drammen
Phone: +47 (0)32 / 24 30 00
Fax: +47 (0)32 / 84 85 77

Fonseca S.A. **PORTUGAL**
R. João Francisco do Casal 87/89
PT-3801-997 Aveiro, Esgueira
Phone: +351 (0)234 / 303 900
Fax: +351 (0)234 / 303 910

SIRIUS TRADING & SERVICES SRL **ROMANIA**
Aleea Lacul Morii Nr. 3
RO-060841 Bucuresti, Sector 6
Phone: +40 (0)21 / 430 40 06
Fax: +40 (0)21 / 430 40 02

INEA SR d.o.o. **SERBIA**
Ul. Karadjordjeva 12/217
SER-11300 Smederevo
Phone: +386 (026) 461 54 01

SIMAP SK (Západné Slovensko) **SLOVAKIA**
Jána Derku 1671
SK-911 01 Trenčín
Phone: +421 (0)32 743 04 72
Fax: +421 (0)32 743 75 20

INEA RBT d.o.o. **SLOVENIA**
Stegne 11
SI-1000 Ljubljana
Phone: +386 (0)1 / 513 8116
Fax: +386 (0)1 / 513 8170

Beijer Electronics Automation AB **SWEDEN**
Box 426
SE-20124 Malmö
Phone: +46 (0)40 / 35 86 00
Fax: +46 (0)40 / 93 23 01

OMNI RAY AG **SWITZERLAND**
Im Schörli 5
CH-8600 Dübendorf
Phone: +41 (0)44 / 802 28 80
Fax: +41 (0)44 / 802 28 28

OOO "CSC-AUTOMATION" **UKRAINE**
4-B, M. Raskovoyi St.
UA-02660 Kiev
Phone: +380 (0)44 / 494 33 44
Fax: +380 (0)44 / 494-33-66

EURASIAN REPRESENTATIVES

TOO Kazpromavtomatika **KAZAKHSTAN**
UL. ZHAMBYLA 28,
KAZ-100017 Karaganda
Phone: +7 7212 / 50 10 00
Fax: +7 7212 / 50 11 50

MIDDLE EAST REPRESENTATIVE

I.C. SYSTEMS Ltd. **EGYPT**
23 Al-Saad-Al-Alee St.
EG-Sarayat, Maadi, Cairo
Phone: +20 (0) 2 / 235 98 548
Fax: +20 (0) 2 / 235 96 625

SHERF Motion Techn. Ltd. **ISRAEL**
Rehov Hamerkava 19
IL-58851 Holon
Phone: +972 (0)3 / 559 54 62
Fax: +972 (0)3 / 556 01 82

CEG LIBAN **LEBANON**
Cebaco Center/Block A Autostrade DORA
Lebanon-Beirut
Phone: +961 (0)1 / 240 445
Fax: +961 (0)1 / 240 193

AFRICAN REPRESENTATIVE

ADROIT TECHNOLOGIES **SOUTH AFRICA**
20 Waterford Office Park 189 Witkoppen Road
ZA-Fourways
Phone: + 27 (0)11 / 658 8100
Fax: + 27 (0)11 / 658 8101