MITSUBISHI
ELECTRIC

Programmable Controller

MELSEC iQ-R series

MELSEC iQ-R Simple Motion Module User's Manual (Network)

-RD77GF4
-RD77GF8
-RD77GF16
-RD77GF32

SAFETY PRECAUTIONS

(Read these precautions before using this product.)

Before using this product, please read this manual and the relevant manuals carefully and pay full attention to safety to handle the product correctly.

The precautions given in this manual are concerned with this product only. Refer to the MELSEC iQ-R Module Configuration Manual for a description of the PLC system safety precautions.

In this manual, the safety precautions are classified into two levels: "⚠WARNING" and "⚠CAUTION".

⚠ WARNING	Indicates that incorrect handling may cause hazardous conditions, resulting in death or severe injury.
⚠ CAUTION	Indicates that incorrect handling may cause hazardous conditions, resulting in minor or moderate injury or property damage.

Under some circumstances, failure to observe the precautions given under "⚠CAUTION" may lead to serious consequences.

Observe the precautions of both levels because they are important for personal and system safety.

Make sure that the end users read this manual and then keep the manual in a safe place for future reference.

[Design Precautions]

⚠WARNING

- Configure safety circuits external to the programmable controller to ensure that the entire system operates safely even when a fault occurs in the external power supply or the programmable controller. Failure to do so may result in an accident due to an incorrect output or malfunction.
  (1) Emergency stop circuits, protection circuits, and protective interlock circuits for conflicting operations (such as forward/reverse rotations or upper/lower limit positioning) must be configured external to the programmable controller.
  (2) When the programmable controller detects an abnormal condition, it stops the operation and all outputs are:
    - Turned off if the overcurrent or overvoltage protection of the power supply module is activated.
    - Held or turned off according to the parameter setting if the self-diagnostic function of the CPU module detects an error such as a watchdog timer error.
  (3) All outputs may be turned on if an error occurs in a part, such as an I/O control part, where the CPU module cannot detect any error. To ensure safety operation in such a case, provide a safety mechanism or a fail-safe circuit external to the programmable controller. For a fail-safe circuit example, refer to "General Safety Requirements" in the MELSEC iQ-R Module Configuration Manual.
  (4) Outputs may remain on or off due to a failure of a component such as a relay and transistor in an output circuit. Configure an external circuit for monitoring output signals that could cause a serious accident.
- In an output circuit, when a load current exceeding the rated current or an overcurrent caused by a load short-circuit flows for a long time, it may cause smoke and fire. To prevent this, configure an external safety circuit, such as a fuse.
- Configure a circuit so that the programmable controller is turned on first and then the external power supply. If the external power supply is turned on first, an accident may occur due to an incorrect output or malfunction.

[Design Precautions]

⚠WARNING

- For the operating status of each station after a communication failure, refer to manuals relevant to the network. Incorrect output or malfunction due to a communication failure may result in an accident.
- When connecting an external device with a CPU module or intelligent function module to modify data of a running programmable controller, configure an interlock circuit in the program to ensure that the entire system will always operate safely. For other forms of control (such as program modification, parameter change, forced output, or operating status change) of a running programmable controller, read the relevant manuals carefully and ensure that the operation is safe before proceeding. Improper operation may damage machines or cause accidents.
- Especially, when a remote programmable controller is controlled by an external device, immediate action cannot be taken if a problem occurs in the programmable controller due to a communication failure. To prevent this, configure an interlock circuit in the program, and determine corrective actions to be taken between the external device and CPU module in case of a communication failure.
- Do not write any data to the "system area" and "write-protect area" of the buffer memory in the module. Also, do not use any "use prohibited" signals as an output signal from the CPU module to each module. Doing so may cause malfunction of the programmable controller system. For the "system area", "write-protect area", and the "use prohibited" signals, refer to the user's manual for the module used.
- If a communication cable is disconnected, the network may be unstable, resulting in a communication failure of multiple stations. Configure an interlock circuit in the program to ensure that the entire system will always operate safely even if communications fail. Failure to do so may result in an accident due to an incorrect output or malfunction.
- Configure safety circuits external to the programmable controller to ensure that the entire system operates safely even when a fault occurs in the external power supply or the programmable controller. Failure to do so may result in an accident due to an incorrect output or malfunction.
  (1) Machine home position return is controlled by two kinds of data: a home position return direction and a home position return speed. Deceleration starts when the proximity dog signal turns on. If an incorrect home position return direction is set, motion control may continue without deceleration. To prevent machine damage caused by this, configure an interlock circuit external to the programmable controller.
  (2) When the module detects an error, the motion slows down and stops or the motion rapidly stops, depending on the stop group setting in parameter. Set the parameter to meet the specifications of a positioning control system. In addition, set the home position return parameter and positioning data within the specified setting range.
  (3) Outputs may remain on or off, or become undefined due to a failure of a component such as an insulation element and transistor in an output circuit, where the module cannot detect any error. In a system that the incorrect output could cause a serious accident, configure an external circuit for monitoring output signals.
- If safety standards (ex., robot safety rules, etc.,) apply to the system using the module, servo amplifier and servomotor, make sure that the safety standards are satisfied.
- Construct a safety circuit externally of the module or servo amplifier if the abnormal operation of the module or servo amplifier differs from the safety directive operation in the system.

[Design Precautions]

⚠CAUTION

- Do not install the control lines or communication cables together with the main circuit lines or power cables. Keep a distance of 100 mm or more between them. Failure to do so may result in malfunction due to noise.
- During control of an inductive load such as a lamp, heater, or solenoid valve, a large current (approximately ten times greater than normal) may flow when the output is turned from off to on. Therefore, use a module that has a sufficient current rating.
- After the CPU module is powered on or is reset, the time taken to enter the RUN status varies depending on the system configuration, parameter settings, and/or program size. Design circuits so that the entire system will always operate safely, regardless of the time.
- Do not power off the programmable controller or reset the CPU module while the settings are being written. Doing so will make the data in the flash ROM and SD memory card undefined. The values need to be set in the buffer memory and written to the flash ROM and SD memory card again. Doing so also may cause malfunction or failure of the module.
- When changing the operating status of the CPU module from external devices (such as the remote RUN/STOP functions), select "Do Not Open by Program" for "Opening Method" of "Module Parameter". If "Open by Program" is selected, an execution of the remote STOP function causes the communication line to close. Consequently, the CPU module cannot reopen the line, and external devices cannot execute the remote RUN function.

[Security Precautions]

⚠WARNING

- To maintain the security (confidentiality, integrity, and availability) of the programmable controller and the system against unauthorized access, denial-of-service (DoS) attacks, computer viruses, and other cyberattacks from external devices via the network, take appropriate measures such as firewalls, virtual private networks (VPNs), and antivirus solutions.

[Installation Precautions]

⚠WARNING

- Shut off the external power supply (all phases) used in the system before mounting or removing the module. Failure to do so may result in electric shock or cause the module to fail or malfunction.

[Installation Precautions]

⚠CAUTION

- Use the programmable controller in an environment that meets the general specifications in the Safety Guidelines included with the base unit. Failure to do so may result in electric shock, fire, malfunction, or damage to or deterioration of the product.
- To mount a module, place the concave part(s) located at the bottom onto the guide(s) of the base unit, and push in the module until the hook(s) located at the top snaps into place. Incorrect interconnection may cause malfunction, failure, or drop of the module.
- To mount a module with no module fixing hook, place the concave part(s) located at the bottom onto the guide(s) of the base unit, push in the module, and fix it with screw(s). Incorrect interconnection may cause malfunction, failure, or drop of the module.
- When using the programmable controller in an environment of frequent vibrations, fix the module with a screw.
- Tighten the screws within the specified torque range. Undertightening can cause drop of the screw, short circuit, or malfunction. Overtightening can damage the screw and/or module, resulting in drop, short circuit, or malfunction.
- When using an extension cable, connect it to the extension cable connector of the base unit securely. Check the connection for looseness. Poor contact may cause malfunction.
- When using an SD memory card, fully insert it into the SD memory card slot. Check that it is inserted completely. Poor contact may cause malfunction.
- Securely insert an extended SRAM cassette into the cassette connector of the CPU module. After insertion, close the cassette cover and check that the cassette is inserted completely. Poor contact may cause malfunction.
- Do not directly touch any conductive parts and electronic components of the module, SD memory card, extended SRAM cassette, or connector. Doing so can cause malfunction or failure of the module.

[Wiring Precautions]

⚠WARNING

- Shut off the external power supply (all phases) used in the system before installation and wiring. Failure to do so may result in electric shock or cause the module to fail or malfunction.
- After installation and wiring, attach a blank cover module (RG60) to each empty slot and an included extension connector protective cover to the unused extension cable connector before powering on the system for operation. Failure to do so may result in electric shock.

[Wiring Precautions]

⚠CAUTION

- Individually ground the FG and LG terminals of the programmable controller with a ground resistance of 100 ohms or less. Failure to do so may result in electric shock or malfunction.
- Use a solderless terminal with an insulation sleeve for terminal block wiring. Note that up to two solderless terminals can be connected per terminal block.
- Use applicable solderless terminals and tighten them within the specified torque range. If any spade solderless terminal is used, it may be disconnected when the terminal screw comes loose, resulting in failure.
- Check the rated voltage and signal layout before wiring to the module, and connect the cables correctly. Connecting a power supply with a different voltage rating or incorrect wiring may cause fire or failure.
- Connectors for external devices must be crimped or pressed with the tool specified by the manufacturer, or must be correctly soldered. Incomplete connections may cause short circuit, fire, or malfunction.
- Securely connect the connector to the module. Poor contact may cause malfunction.
- Do not install the control lines or communication cables together with the main circuit lines or power cables. Keep a distance of 100 mm or more between them. Failure to do so may result in malfunction due to noise.
- When an overcurrent caused by an error of an external device or a failure of a module flows for a long time, it may cause smoke and fire. To prevent this, configure an external safety circuit, such as a fuse.
- Place the cables in a duct or clamp them. If not, dangling cable may swing or inadvertently be pulled, resulting in damage to the module or cables or malfunction due to poor contact. Do not clamp the extension cables with the jacket stripped. Doing so may change the characteristics of the cables, resulting in malfunction.
- When disconnecting the communication cable or power cable from the module, do not pull the cable by the cable part. For the cable connected to the terminal block, loosen the terminal screws. Pulling the cable connected to the module may result in malfunction or damage to the module or cable.
- Check the interface type and correctly connect the cable. Incorrect wiring (connecting the cable to an incorrect interface) may cause failure of the module and external device.
- Tighten the terminal screws or connector screws within the specified torque range. Undertightening can cause drop of the screw, short circuit, fire, or malfunction. Overtightening can damage the screw and/or module, resulting in drop, short circuit, fire, or malfunction.
- Tighten the terminal block mounting screws, terminal screws, and module fixing screws within each specified torque range. Undertightening of the terminal block mounting screws and terminal screws can cause short circuit, fire, or malfunction. Overtightening of them can damage the screw and/or module, resulting in drop, short circuit, or malfunction. Undertightening of the module fixing screws can cause drop of the screw. Overtightening of them can damage the screw and/or module, resulting in drop.
- When disconnecting the cable from the module, do not pull the cable by the cable part. For the cable with connector, hold the connector part of the cable. For the cable connected to the terminal block, loosen the terminal screw. Pulling the cable connected to the module may result in malfunction or damage to the module or cable.

[Wiring Precautions]

⚠CAUTION

- Prevent foreign matter such as dust or wire chips from entering the module. Such foreign matter can cause a fire, failure, or malfunction.
- A protective film is attached to the top of the module to prevent foreign matter, such as wire chips, from entering the module during wiring. Do not remove the film during wiring. Remove it for heat dissipation before system operation.
- Programmable controllers must be installed in control panels. Connect the main power supply to the power supply module in the control panel through a relay terminal block. Wiring and replacement of a power supply module must be performed by qualified maintenance personnel with knowledge of protection against electric shock. For wiring, refer to the MELSEC iQ-R Module Configuration Manual.
- For Ethernet cables to be used in the system, select the ones that meet the specifications in the user's manual for the module used. If not, normal data transmission is not guaranteed.

[Startup and Maintenance Precautions]

⚠WARNING

- Do not touch any terminal while power is on. Doing so will cause electric shock or malfunction.
- Correctly connect the battery connector. Do not charge, disassemble, heat, short-circuit, solder, or throw the battery into the fire. Also, do not expose it to liquid or strong shock. Doing so will cause the battery to produce heat, explode, ignite, or leak, resulting in injury and fire.
- Shut off the external power supply (all phases) used in the system before cleaning the module or retightening the terminal screws, connector screws, or module fixing screws. Failure to do so may result in electric shock.

[Startup and Maintenance Precautions]

⚠CAUTION

- When connecting an external device with a CPU module or intelligent function module to modify data of a running programmable controller, configure an interlock circuit in the program to ensure that the entire system will always operate safely. For other forms of control (such as program modification, parameter change, forced output, or operating status change) of a running programmable controller, read the relevant manuals carefully and ensure that the operation is safe before proceeding. Improper operation may damage machines or cause accidents.
- Especially, when a remote programmable controller is controlled by an external device, immediate action cannot be taken if a problem occurs in the programmable controller due to a communication failure. To prevent this, configure an interlock circuit in the program, and determine corrective actions to be taken between the external device and CPU module in case of a communication failure.
- Do not disassemble or modify the modules. Doing so may cause failure, malfunction, injury, or a fire.
- Use any radio communication device such as a cellular phone or PHS (Personal Handy-phone System) more than 25 cm away in all directions from the programmable controller. Failure to do so may cause malfunction.
- Shut off the external power supply (all phases) used in the system before mounting or removing the module. Failure to do so may cause the module to fail or malfunction.
- Tighten the screws within the specified torque range. Undertightening can cause drop of the component or wire, short circuit, or malfunction. Overtightening can damage the screw and/or module, resulting in drop, short circuit, or malfunction.
- After the first use of the product, do not mount/remove the module to/from the base unit, and the terminal block to/from the module, and do not insert/remove the extended SRAM cassette to/from the CPU module more than 50 times (IEC 61131-2 compliant) respectively. Exceeding the limit may cause malfunction.
- After the first use of the product, do not insert/remove the SD memory card to/from the CPU module more than 500 times. Exceeding the limit may cause malfunction.
- Do not touch the metal terminals on the back side of the SD memory card. Doing so may cause malfunction or failure of the module.
- Do not touch the integrated circuits on the circuit board of an extended SRAM cassette. Doing so may cause malfunction or failure of the module.
- Do not drop or apply shock to the battery to be installed in the module. Doing so may damage the battery, causing the battery fluid to leak inside the battery. If the battery is dropped or any shock is applied to it, dispose of it without using.
- Startup and maintenance of a control panel must be performed by qualified maintenance personnel with knowledge of protection against electric shock. Lock the control panel so that only qualified maintenance personnel can operate it.
- Before handling the module, touch a conducting object such as a grounded metal to discharge the static electricity from the human body. Failure to do so may cause the module to fail or malfunction.
- Before testing the operation, set a low speed value for the speed limit parameter so that the operation can be stopped immediately upon occurrence of a hazardous condition.
- Confirm and adjust the program and each parameter before operation. Unpredictable movements may occur depending on the machine.
- When using the absolute position system function, on starting up, and when the module or absolute position motor has been replaced, always perform a home position return.

[Startup and Maintenance Precautions]

⚠CAUTION

- Before starting the operation, confirm the brake function.
- Do not perform a megger test (insulation resistance measurement) during inspection.
- After maintenance and inspections are completed, confirm that the position detection of the absolute position detection function is correct.
- Lock the control panel and prevent access to those who are not certified to handle or install electric equipment.

[Operating Precautions]

⚠CAUTION

- When changing data and operating status, and modifying program of the running programmable controller from an external device such as a personal computer connected to an intelligent function module, read relevant manuals carefully and ensure the safety before operation. Incorrect change or modification may cause system malfunction, damage to the machines, or accidents.
- Do not power off the programmable controller or reset the CPU module while the setting values in the buffer memory are being written to the flash ROM in the module. Doing so will make the data in the flash ROM and SD memory card undefined. The values need to be set in the buffer memory and written to the flash ROM and SD memory card again. Doing so also may cause malfunction or failure of the module.
- Note that when the reference axis speed is specified for interpolation operation, the speed of the partner axis (2nd, 3rd, or 4th axis) may exceed the speed limit value.
- Do not go near the machine during test operations or during operations such as teaching. Doing so may lead to injuries.

[Disposal Precautions]

⚠CAUTION

- When disposing of this product, treat it as industrial waste.
- When disposing of batteries, separate them from other wastes according to the local regulations. For details on battery regulations in EU member states, refer to the MELSEC iQ-R Module Configuration Manual.

[Transportation Precautions]

⚠CAUTION

- When transporting lithium batteries, follow the transportation regulations. For details on the regulated models, refer to the MELSEC iQ-R Module Configuration Manual.
- The halogens (such as fluorine, chlorine, bromine, and iodine), which are contained in a fumigant used for disinfection and pest control of wood packaging materials, may cause failure of the product. Prevent the entry of fumigant residues into the product or consider other methods (such as heat treatment) instead of fumigation. The disinfection and pest control measures must be applied to unprocessed raw wood.

INTRODUCTION

Thank you for purchasing the Mitsubishi Electric MELSEC iQ-R series programmable controllers.

This manual describes the functions, programming, and troubleshooting of the relevant products listed below. Before using this product, please read this manual and the relevant manuals carefully and develop familiarity with the functions and performance of the MELSEC iQ-R series programmable controller to handle the product correctly.

When applying the program examples provided in this manual to an actual system, ensure the applicability and confirm that it will not cause system control problems.

Please make sure that the end users read this manual.

Relevant products

RD77GF4, RD77GF8, RD77GF16, RD77GF32

COMPLIANCE WITH EMC AND LOW VOLTAGE DIRECTIVES

Method of ensuring compliance

To ensure that Mitsubishi programmable controllers maintain EMC and Low Voltage Directives when incorporated into other machinery or equipment, certain measures may be necessary. Please refer to one of the following manuals.

📖MELSEC iQ-R Module Configuration Manual

📖Safety Guidelines (This manual is included with the base unit.)

The CE mark on the side of the programmable controller indicates compliance with EMC and Low Voltage Directives.

Additional measures

To ensure that this product maintains EMC and Low Voltage Directives, please refer to one of the following manuals.

📖MELSEC iQ-R Module Configuration Manual

📖Safety Guidelines (This manual is included with the base unit.)

CONTENTS

SAFETY PRECAUTIONS 1
INTRODUCTION 9
COMPLIANCE WITH EMC AND LOW VOLTAGE DIRECTIVES 9
RELEVANT MANUALS 12
TERMS 13

CHAPTER 1 FUNCTIONS 16

1.1 Fixed Cycle Communication 16
1.2 CC-Link IE Field Network Synchronous Communication Function 16
1.3 Cyclic Transmission 17
Data flow and link device assignment 17
Link refresh 20
Direct access to link devices 22
Cyclic data integrity assurance 25
Interlink transmission 31
Input and output status settings when failure occurs 32
Output status setting for CPU STOP 33
Cyclic transmission stop and restart 34
1.4 Transient Transmission 35
Communications within the same network 35
Communications with different networks 36
1.5 IP Packet Transfer Function 39
System configuration 40
Setting 41
IP communication test 46
Access range 48
Relay using CC-Link IE Controller Network 49
Precautions 50
Example of communications using the IP packet transfer function 52
1.6 Safety Communication Function 59
Communications with safety stations 59
Safety station interlock function 62

CHAPTER 2 PARAMETER SETTINGS 63

2.1 Setting Parameters 63
2.2 Required Settings 63
Station Type 64
Network No. 64
Station No. 64
Parameter Setting Method 64
2.3 Basic Settings 65
Network Configuration Settings 66
Refresh Settings 69
Network Topology 72
2.4 Application Settings 73
Supplementary Cyclic Settings 74
IP Address 74
Communication Mode 75

Parameter Name . . . 75
Dynamic Routing . . . 75
Event Reception from Other Stations . . . 75
Module Operation Mode . . . 76
Interlink Transmission Settings . . . 76
Safety Communication Setting . . . 80

CHAPTER 3 PROGRAMMING 83

3.1 Precautions for Programming . . . 83
3.2 Communication Example of Safety Communication Function . . . 86
System configuration example . . . 86
Setting in the master station and remote device station . . . 87
Setting in the local station . . . 94
Checking the network status . . . 96
Program examples . . . 97

CHAPTER 4 TROUBLESHOOTING 99

4.1 Checking with LED . . . 99
4.2 Checking the Module Status . . . 102
4.3 Checking the Network Status . . . 104
4.4 Troubleshooting by Symptom . . . 124
4.5 List of Parameter Nos. . . . 129
4.6 Event List . . . 130

APPENDICES 132

Appendix 1 Module Label . . . 132
Appendix 2 Buffer Memory . . . 133
List of buffer memory addresses . . . 133
Details of buffer memory addresses . . . 136
Appendix 3 List of Link Special Relay (SB) . . . 142
Appendix 4 List of Link Special Register (SW) . . . 151
Appendix 5 Dedicated Instruction . . . 165
Precautions for dedicated instructions. . . . 166
Appendix 6 Processing Time . . . 167
Link scan time . . . 168
Cyclic transmission delay time . . . 169
Interlink transmission time . . . 172
Transmission delay time of safety communications . . . 173
Appendix 7 Differences in Cyclic Transmission Modes . . . 176

INDEX 178

REVISIONS . . . 180
WARRANTY . . . 181
TRADEMARKS . . . 182

RELEVANT MANUALS

Manual name [manual number]	Description	Available form
MELSEC iQ-R Simple Motion Module User's Manual (Network) [IB-0300307ENG] (This manual)	Functions, parameter settings, troubleshooting, and buffer memory of CC-Link IE Field Network	Print book
		e-Manual PDF
MELSEC iQ-R Simple Motion Module User's Manual (Startup) [IB-0300245ENG]	Specifications, procedures before operation, system configuration, wiring, and operation examples of the Simple Motion module	Print book
		e-Manual PDF
MELSEC iQ-R Simple Motion Module User's Manual (Application) [IB-0300247ENG]	Functions, input/output signals, buffer memory, parameter settings, programming, and troubleshooting of the Simple Motion module	Print book
		e-Manual PDF
MELSEC iQ-R Simple Motion Module User's Manual (Advanced Synchronous Control) [IB-0300249ENG]	Functions and programming for the synchronous control of the Simple Motion module	Print book
		e-Manual PDF

This manual does not include information on the module function blocks.

For details, refer to the Function Block Reference for the module used.

Point

e-Manual refers to the Mitsubishi Electric FA electronic book manuals that can be browsed using a dedicated tool.

e-Manual has the following features:

- Required information can be cross-searched in multiple manuals.
- Other manuals can be accessed from the links in the manual.
- The hardware specifications of each part can be found from the product figures.
- Pages that users often browse can be bookmarked.
- Sample programs can be copied to an engineering tool.

TERMS

Unless otherwise specified, this manual uses the following terms.

Term	Description
Baton pass	A token to send data over a network
Buffer memory	A memory in an intelligent function module, where data (such as setting values and monitoring values) are stored. When using the CPU module, the memory is indicated for storing data (such as setting values and monitored values) of the Ethernet function and data used for data communication of the multiple CPU function.
CC-Link IE Controller Network-equipped module	A generic term for the RJ71GP21-SX CC-Link IE Controller Network module and the following modules when the CC-Link IE Controller Network function is used: • RJ71EN71 • RnENCPU
CC-Link IE Field Network	A high-speed and large-capacity open field network that is based on Ethernet (1000BASE-T)
Control CPU	A CPU module that controls connected I/O modules and intelligent function modules. In a multiple CPU system, there are multiple CPU modules and each connected module can be controlled by a different CPU module.
CPU module	The abbreviation for the MELSEC iQ-R series CPU module
CPU module (built-in Ethernet port part)	A built-in Ethernet port part of the CPU module (CPU part for the RnENCPU) (📖MELSEC iQ-R Ethernet/CC-Link IE User's Manual (Startup))
Cyclic transmission	A function by which data are periodically exchanged among stations on the network using link devices
Data link	A generic term for cyclic transmission and transient transmission
Dedicated instruction	An instruction for using functions of the module
Device	A device (X, Y, M, D, or others) in a CPU module
Disconnection	A process of stopping data link if a data link error occurs
Engineering tool	A generic term for GX Works3 and MR Configurator2
Ethernet adapter module	The abbreviation for the NZ2GF-ETB CC-Link IE Field Network Ethernet adapter module
Ethernet device	A generic term for the devices supporting IP communication (such as personal computers)
Ethernet-equipped module	A generic term for the following modules when the Ethernet function is used • RJ71EN71 • CPU module
Global label	A label that is enabled for all program data when creating multiple program data in the project. There are two types of global labels: module label that is automatically generated by GX Works3 and label that can be created for the any of the specified devices.
Head module	The abbreviation for the LJ72GF15-T2 CC-Link IE Field Network head module
Intelligent device station	A station that exchanges I/O signals (bit data) and I/O data (word data) with another station by cyclic transmission. This station responds to a transient transmission request from another station and also issues a transient transmission request to another station.
Intelligent function module	A MELSEC iQ-R series module that has functions other than input and output, such as an A/D converter module and D/A converter module
Label	A label that represents a device in a given character string
Link device	A device (RX, RY, RWr, or RWw) in a module on CC-Link IE Field Network
Link refresh	Automatic data transfer between a link device of the Simple Motion module and a device in a CPU module
Link scan (link scan time)	Time required for all the stations on the network to transmit data. The link scan time depends on data volume and the number of transient transmission requests.
Link special register (SW)	Word data that indicates the operating status and data link status of a module on CC-Link IE Field Network
Link special relay (SB)	Bit data that indicates the operating status and data link status of a module on CC-Link IE Field Network
Local station	A station that performs cyclic transmission and transient transmission with the master station and other local stations
Master operating station	A station that controls the entire network in the network where a master station and submaster station are connected. Only one master station can be used in a network.
Master station	A station that controls the entire network. This station can perform cyclic transmission and transient transmission with all stations. Only one master station can be used in a network.
Master/local module	A generic term for the RJ71GF11-T2 CC-Link IE Field Network master/local module and the following modules when the CC-Link IE Field Network function is used: • RJ71EN71 • RnENCPU
Module label	A label that represents one of memory areas (I/O signals and buffer memory areas) specific to each module in a given character string. GX Works3 automatically generates this label, which can be used as a global label.

Term	Description
Network module	A generic term for the following modules: • Ethernet interface module • CC-Link IE Controller Network module • Module on CC-Link IE Field Network • MELSECNET/H network module • MELSECNET/10 network module • RnENCPU (network part)
RAS	The abbreviation for Reliability, Availability, and Serviceability. This term refers to usability of automated equipment.
READ	A generic term for the JP.READ and GP.READ
RECV	A generic term for the JP.RECV and GP.RECV
RECVS	A generic term for the G.RECVS and Z.RECVS
Relay station	A station that includes two or more network modules. Data are passed through this station to stations on other networks
REMFR	A generic term for the JP.REMFR and ZP.REMFR
Remote device station	A station that exchanges I/O signals (bit data) and I/O data (word data) with another station by cyclic transmission. This station responds to a transient transmission request from another station.
Remote head module	The abbreviation for the RJ72GF15-T2 CC-Link IE Field Network remote head module
Remote I/O station	A station that exchanges I/O signals (bit data) with the master station by cyclic transmission
Remote input (RX)	Bit data input from a slave station to the master station (For some areas in a local station, data are input in the opposite direction.)
Remote output (RY)	Bit data output from the master station to a slave station (For some areas in a local station, data are output in the opposite direction.)
Remote register (RWr)	Word data input from a slave station to the master station (For some areas in a local station, data are input in the opposite direction.)
Remote register (RWw)	Word data output from the master station to a slave station (For some areas in a local station, data are output in the opposite direction.)
REMTO	A generic term for the JP.REMTO and ZP.REMTO
REQ	A generic term for the J.REQ, JP.REQ, G.REQ, and GP.REQ
Reserved station	A station reserved for future use. This station is not actually connected, but counted as a connected station.
Return	A process of restarting data link when a station recovers from an error
RIRD	A generic term for the J.RIRD, JP.RIRD, G.RIRD, and GP.RIRD
RIWT	A generic term for the J.RIWT, JP.RIWT, G.RIWT, and GP.RIWT
RnENCPU	A generic term for the R04ENCPU, R08ENCPU, R16ENCPU, R32ENCPU, and R120ENCPU
RnENCPU (CPU part)	The left side (CPU part) of the RnENCPU (📖MELSEC iQ-R Ethernet/CC-Link IE User's Manual (Startup))
RnENCPU (network part)	The right side (network part) of the RnENCPU (📖MELSEC iQ-R Ethernet/CC-Link IE User's Manual (Startup))
Routing	A process of selecting paths for communication with other networks. There are two types of routing: dynamic routing that auto-selects the communication routes, and static routing where communication routes are arbitrarily set.
Safety communications	A function to exchange safety data between safety stations on the same network
Safety connection	A connection established for safety communications
Safety CPU	A generic term for the R08SFCPU, R16SFCPU, R32SFCPU, and R120SFCPU
Safety data	Data exchanged through safety communications
Safety device	A device that can be used in safety programs
Safety function module	Another term for the R6SFM
Safety station	A generic term for a station that performs safety communications and standard communications
Seamless communication	Communication that allows users to access a different kind of networks without having to consider the differences as if data were exchanged within one single network
SEND	A generic term for the JP.SEND and GP.SEND
Servo amplifier	A generic term for a drive unit Unless specified in particular, indicates the motor driver unit of the sequential command method which is controlled by the Simple Motion module (belonging to own station).
Simple Motion module	The abbreviation for the MELSEC iQ-R series Simple Motion module (compatible with CC-Link IE Field Network) • RD77GF
Slave station	A generic term for a local station, remote I/O station, remote device station, and intelligent device station
SREAD	A generic term for the JP.SREAD and GP.SREAD
Submaster operating station	A station that monitors the status of a master operating station in the network where a master station and submaster station are connected. Only one master station can be used in a network.

Term	Description
Submaster station	A station that serves as a master station to control the entire network if the master station is disconnected. Only one master station can be used in a network.
SWRITE	A generic term for the JP.SWRITE and GP.SWRITE
System switching	A function which switches the systems between the control system and the standby system to continue operation of the redundant system when a failure or an error occurs in the control system
Transient transmission	A function of communication with another station, which is used when requested by a dedicated instruction or the engineering tool
WRITE	A generic term for the JP.WRITE and GP.WRITE

1 FUNCTIONS

1.1 Fixed Cycle Communication

The communication cycle of the Simple Motion module is fixed cycle. The communication is performed with slave modules in a cycle set in the inter-module synchronization cycle setting.

Refer to the following for details.

📖MELSEC iQ-R Inter-Module Synchronization Function Reference Manual

1.2 CC-Link IE Field Network Synchronous Communication Function

A slave module which supports the CC-Link IE Field Network synchronous communication function operates synchronously with the inter-module synchronization cycle of the Simple Motion module (the communication cycle of CC-Link IE Field Network). Therefore, the operation timing between the Simple Motion module and each slave module can be synchronized.

A slave module which does not support the CC-Link IE Field Network synchronous communication function is also connectable. However, the operation is not synchronized with the inter-module synchronization cycle of the Simple Motion module. Therefore, the operation timing of the slave module is not synchronized with the Simple Motion module.

Refer to the following for details.

📖MELSEC iQ-R Inter-Module Synchronization Function Reference Manual

1.3 Cyclic Transmission

This function allows data to be periodically exchanged among stations on the same network using link devices.

Data flow and link device assignment

Master station and slave stations (except for local stations)

One-to-one communication is possible between the master and slave stations. The status data of the link devices (RY, RWw) of the master station is output to the external device of the slave station, and the input status information from the external device of the slave station is stored in the link devices (RX, RWr) of the master station.

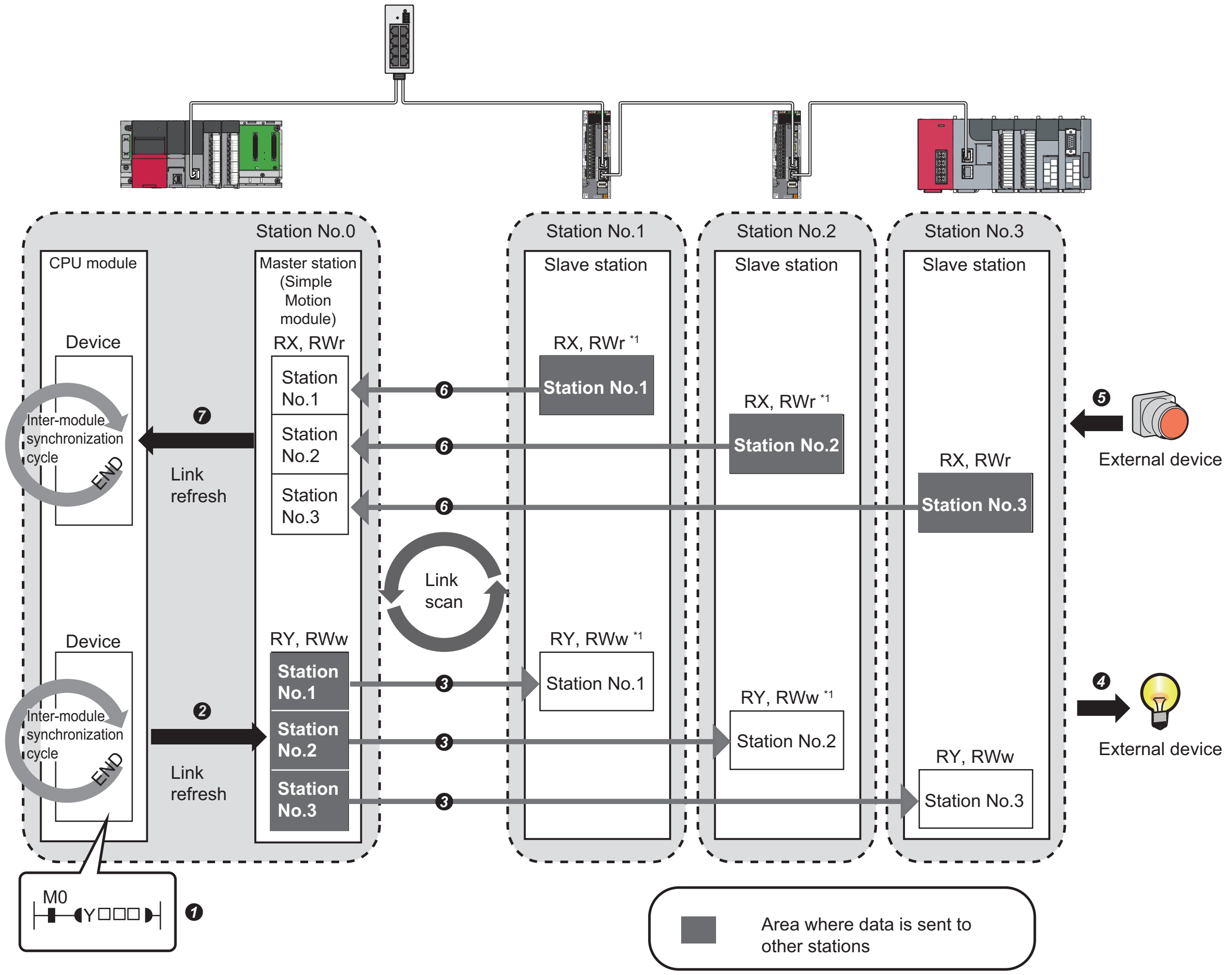
Station No.0
CPU module
Master station (Simple Motion module)
Device
Inter-module synchronization cycle
END
RX, RWr
Station No.1
Station No.2
Station No.3
❼
Link refresh
❻
Link scan
RY, RWw
❷
❸
M0
Y□□□
❶
Station No.1
Slave station
RX, RWr *1
Station No.1
RY, RWw *1
Station No.2
Slave station
RX, RWr *1
Station No.2
RY, RWw *1
Station No.3
Slave station
RX, RWr
Station No.3
RY, RWw
❺
External device
❹
External device
Area where data is sent to other stations

*1 There is no RX or RY depending on the slave module.

- Output from the master station

❶ The device of the CPU module turns on.
❷ The status data of the device of the CPU module are stored in the link devices (RY, RWw) of the master station by link refresh.
❸ The status data of the link devices (RY, RWw) of the master station are stored in the link devices (RY, RWw) of each slave station by link scan.
❹ The status data of the link devices (RY, RWw) of the slave station are output to the external device.

- Input from the slave station

❺ The status data of the external device are stored in the link devices (RX, RWr) of the slave station.
❻ The status data of the link devices (RX, RWr) of the slave station are stored in the link devices (RX, RWr) of the master station by link scan.
❼ The status data of the link devices (RX, RWr) of the master station are stored in the devices of the CPU module by link refresh.

Master station and local stations

Data can be written into the send range of the link devices (RY, RWw) of each station and can be sent to any station on the same network. The status data of the link devices (RY, RWw) of the master station are stored in the link devices (RX, RWr) of each local station. The status data of the link devices (RY, RWw) of local stations are stored in the link devices (RX, RWr) of the master station and the link devices (RY, RWw) of other local stations.

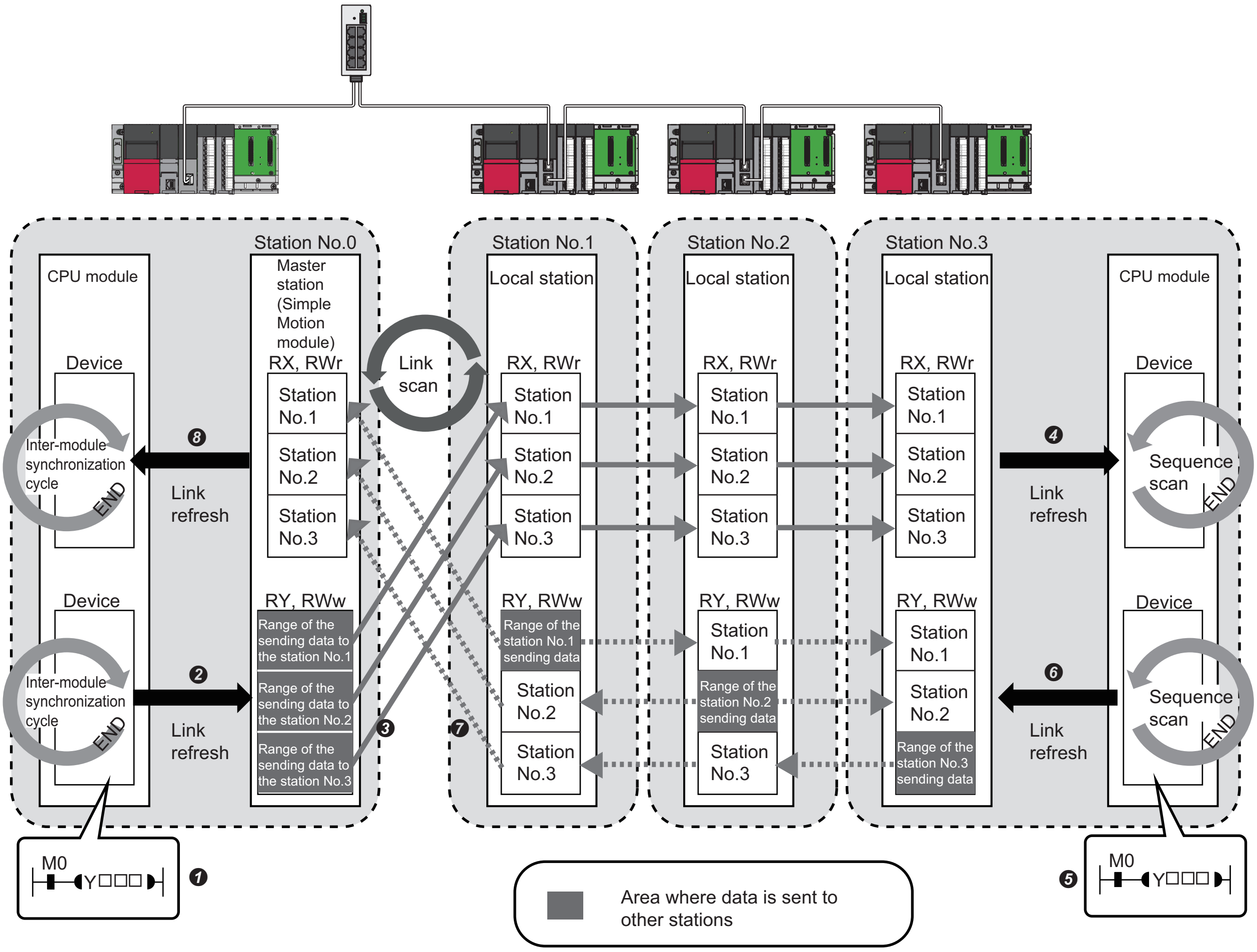

Station No.0
CPU module
Master station (Simple Motion module)
Device
RX, RWr
Station No.1
Station No.2
Station No.3
Inter-module synchronization cycle
END
❽
Link refresh
Device
RY, RWw
Range of the sending data to the station No.1
Range of the sending data to the station No.2
Range of the sending data to the station No.3
❷
❸
❼
Link scan
Station No.1
Local station
Range of the station No.1 sending data
Station No.2
Range of the station No.2 sending data
Station No.3
Range of the station No.3 sending data
CPU module
Sequence scan
❹
❻
M0
Y□□□
❶
❺
Area where data is sent to other stations

- Output from the master station

❶ The device of the CPU module turns on.
❷ The status data of the device of the CPU module are stored in the link devices (RY, RWw) of the master station by link refresh.
❸ The status data of the link devices (RY, RWw) of the master station are stored in the link devices (RX, RWr) of the local station by link scan.
❹ The status data of the link devices (RX, RWr) of the local station are stored in the devices of the CPU module.

- Input from the local station

❺ The device of the CPU module turns on.
❻ The device status data of the CPU module are stored in the own station send range of the link devices (RY, RWw).
❼ The status data of the link devices (RY, RWw) of the local station are stored in the link devices (RX, RWr) of the master station by link scan.
❽ The status data of the link devices (RX, RWr) of the master station are stored in the devices of the CPU module by link refresh.

Coexistence of local stations and the other slave stations (other than local stations)

The data of all slave stations are also stored in the local stations in the same way as the master station.

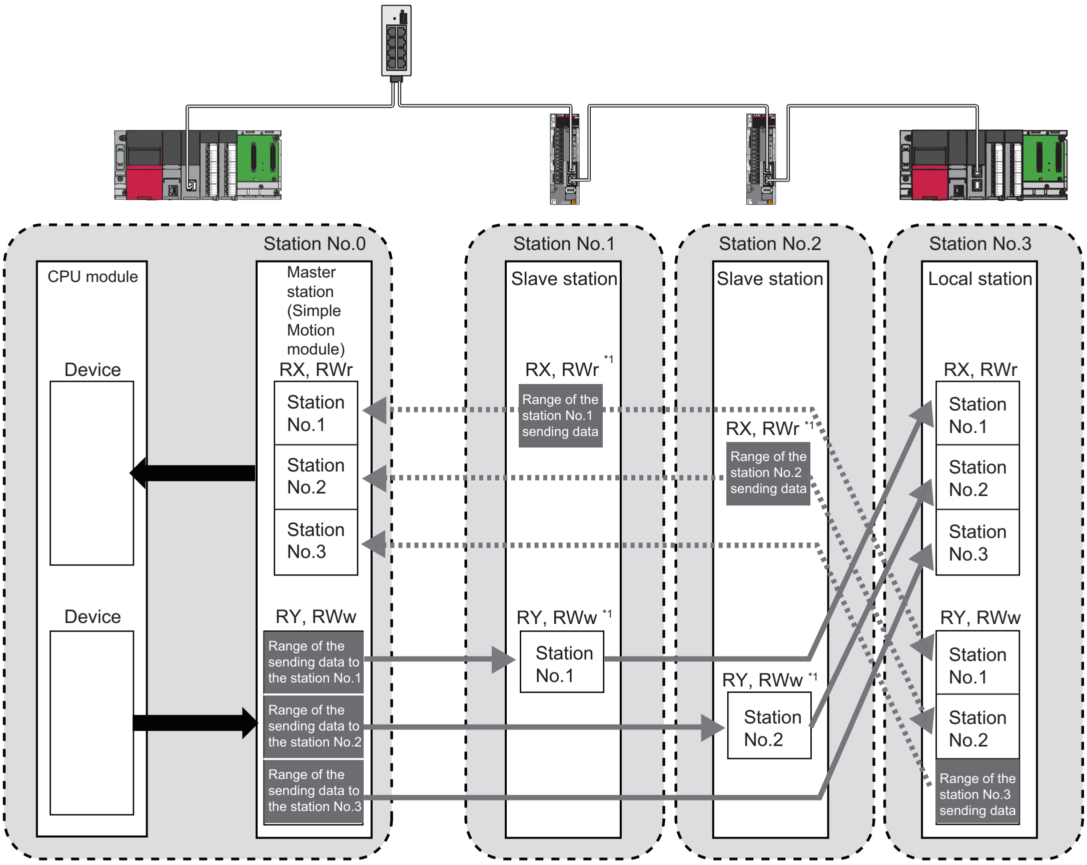
Station No.0
CPU module
Device
Device
Master station (Simple Motion module)
RX, RWr
Station No.1
Station No.2
Station No.3
RY, RWw
Range of the sending data to the station No.1
Range of the sending data to the station No.2
Range of the sending data to the station No.3
Station No.1
Slave station
RX, RWr *1
Range of the station No.1 sending data
RY, RWw *1
Station No.1
Station No.2
Slave station
RX, RWr *1
Range of the station No.2 sending data
RY, RWw *1
Station No.2
Station No.3
Local station
RX, RWr
Station No.1
Station No.2
Station No.3
RY, RWw
Station No.1
Station No.2
Range of the station No.3 sending data

■	Area where data is sent to other stations

*1 There is no RX or RY depending on the slave module.

Setting method

The link devices can be assigned in "Network Configuration Settings" under "Basic Settings". (☞ Page 66 Network Configuration Settings)

The link refresh is assigned in "Refresh Settings" under "Basic Settings". (☞ Page 69 Refresh Settings)

Link refresh

This function automatically transfers data between the link devices of the Simple Motion module and the devices of the CPU module.

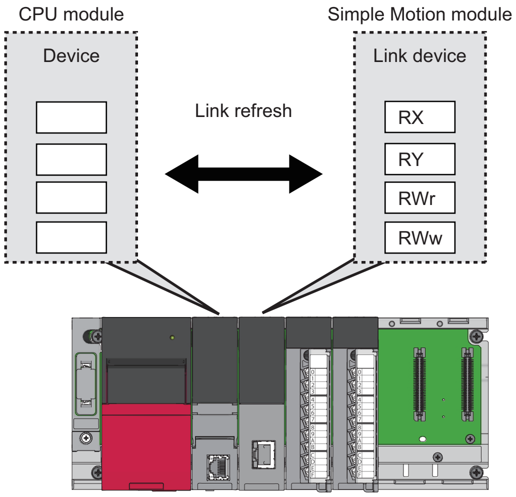
CPU module
Device
Link refresh
Simple Motion module
Link device
RX
RY
RWr
RWw

Concept of the link refresh range (number of points)

The link refresh is performed to the area set in "Refresh Settings" under "Basic Settings" and also specified in "Network Configuration Settings" under "Basic Settings".

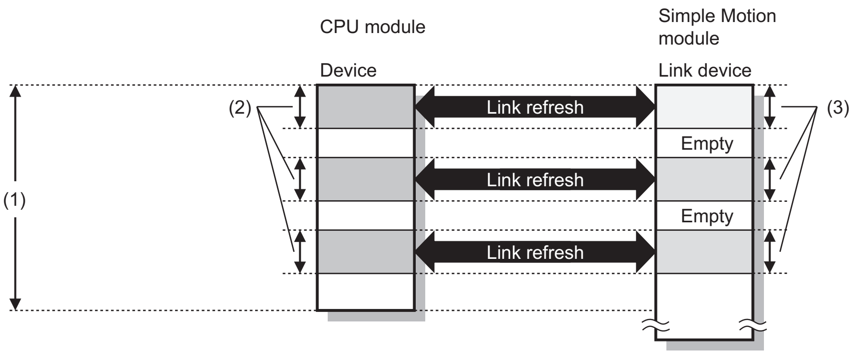
CPU module
Device
Simple Motion module
Link device
Link refresh
Link refresh
Link refresh
Empty
Empty
(1)
(2)
(3)

(1) Range set in "Refresh Settings" under "Basic Settings"
(2) Actual link refresh range
(3) Range set in "Network Configuration Settings" under "Basic Settings"

Shortening the link refresh time and transmission delay time

The link refresh time and transmission delay time can be shortened by reducing the number of link refresh points to the CPU module. The following methods can be used to reduce the number of the link refresh points.

- In "Refresh Settings" under "Basic Settings", set only the link devices used in the CPU module as the link refresh range. (☞ Page 69 Refresh Settings)
- Directly access infrequently used link devices from the program, and remove the corresponding settings from the link refresh range. (☞ Page 22 Direct access to link devices)

Setting method

The link refresh is assigned in "Refresh Settings" under "Basic Settings". (☞ Page 69 Refresh Settings)

Precautions

■Latched devices of the CPU module

If data in latched devices of the CPU module are cleared to zero on a program when the CPU module is powered off and on or reset, the data may be output without being cleared to zero, depending on the timing of the link scan and link refresh. Take the following actions not to output the data in the latched devices of the CPU module.

CPU module device	How to disable the device data
Latch relay (L), file register (R, ZR)	Use the initial device value of the CPU module to clear the device to zero.[*1]
CPU module device within the latch range	Delete all the latch range settings specified in "Latch Interval Operation Setting" under "Device Latch Interval Setting" in "Memory/Device Setting" of "CPU Parameter".

[*1] For the initial device value setting of the CPU module, refer to the following.
📖GX Works3 Operating Manual

Restriction

When the inter-module synchronization setting is set to "Not Use", the link device (RX/RY/RWr/RWw) of the station whose network synchronous communication is set to "Synchronous" is not refreshed.

Direct access to link devices

This function directly accesses the link devices (RX, RY, RWr, RWw, SB, or SW) of the Simple Motion module from the program. Specify a link device as the link direct device (J__) for direct access.

Specification method

Specify the network No. and the link device of the Simple Motion module for reading or writing.

J _ \ _
(1) (2)

(1) Network No.: 1 to 239
(2) Remote input (RX): X0 to X3FFF
Remote output (RY): Y0 to Y3FFF
Remote register (RWw): W0 to W1FFF
Remote register (RWr): W2000 to W3FFF
Link special relay (SB): SB0 to SB1FF
Link special register (SW): SW0 to SW1FF

Ex.

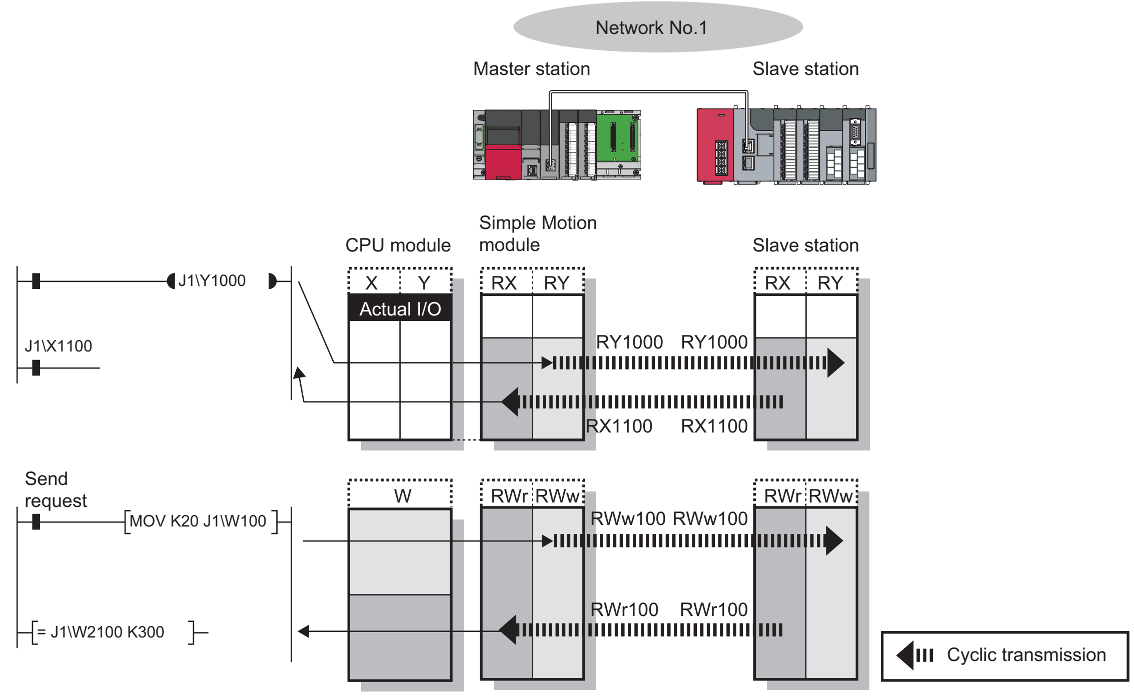
Network No.1
Master station
Slave station
CPU module
Simple Motion module
Slave station
J1\Y1000
J1\X1100
X
Y
Actual I/O
RX
RY
RX
RY
RY1000
RY1000
RX1100
RX1100
Send request
MOV K20 J1\W100
= J1\W2100 K300
W
RWr
RWw
RWr
RWw
RWw100
RWw100
RWr100
RWr100
Cyclic transmission

Readable and writable range

Data can be read or written between the Simple Motion module and CPU module mounted on the same base unit.

■Read

All link devices of the Simple Motion module can be specified. (☞ Page 22 Specification method)

■Write

The range that satisfies all of the following conditions can be specified.

- Area where data is sent to other stations and outside the link refresh range (☞ Page 17 Data flow and link device assignment)
- Within the link device range of the Simple Motion module (☞ Page 22 Specification method)

Ex.

The following shows the example.

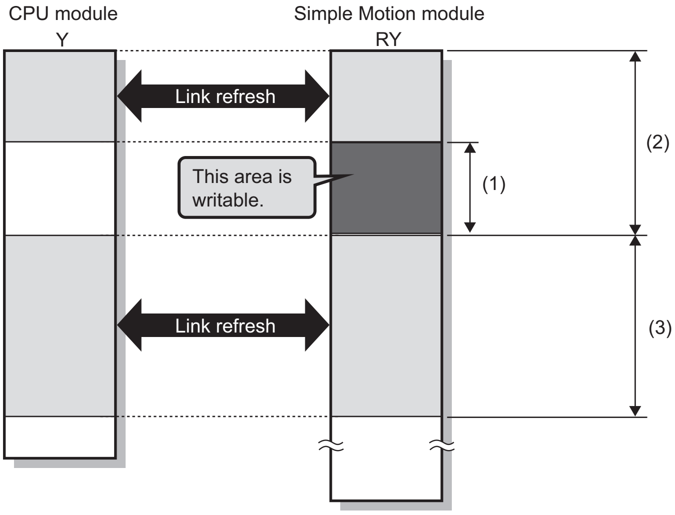
CPU module
Y
Simple Motion module
RY
Link refresh
This area is writable.
(1)
(2)
Link refresh
(3)

(1) Out of the link refresh range
(2) Area where data is sent to other stations
(3) Area for receiving the data from other stations

Point

When writing data to the area in the link refresh range, directly access the link device and write the same data in the device of the CPU module.

- Bad example (Only direct access to the link refresh target)

Link refresh overwrites the value.

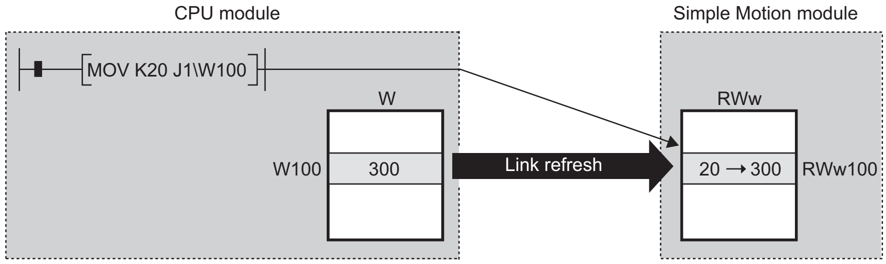
CPU module
Simple Motion module
MOV K20 J1\W100
W
RWw
W100
300
Link refresh
20 → 300
RWw100

- Good example (In addition to direct access, writing the same data to the CPU module device)

The value written by direct access is reflected.

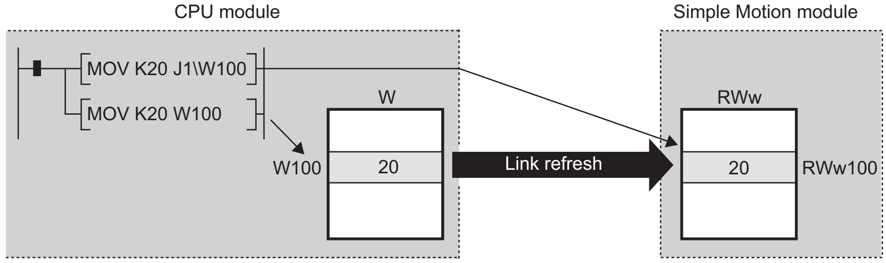
CPU module
Simple Motion module
MOV K20 J1\W100
MOV K20 W100
W
RWw
W100
20
Link refresh
20
RWw100

Differences from link refresh

Item	Access method	
	Link refresh	**Direct access**
Number of steps	1 step	2 steps
Processing speed[*1]	High speed	Low speed
Cyclic data integrity assurance	Available	Not available

*1 For actual values, refer to the following.
📖MELSEC iQ-R Programming Manual (CPU Module Instructions, Standard Functions/Function Blocks)

Shortening the link refresh time and transmission delay time

■Shortening the link refresh time

Remove infrequently used link devices from the link refresh range, and directly read or write the corresponding data using link direct devices. This reduces the number of the link refresh points to the CPU module, resulting in a shorter link refresh time. (☞ Page 20 Link refresh)

■Shortening the transmission delay time

Because the link direct device allows direct reading or writing of data to the link devices of the Simple Motion module at the time of the instruction execution, the transmission delay time can be shortened.

Point

Link refresh is executed in END processing of the sequence scan of the CPU module.

Precautions

■Cyclic data integrity assurance

Direct access to link devices does not provide station-based block data assurance. Use 32-bit data assurance, or if cyclic data of more than 32 bits needs to be assured, use interlock programs. (☞ Page 25 Cyclic data integrity assurance)

■Mounting multiple modules of the same network No.

When multiple Simple Motion modules of the same network No. are mounted, the target of direct access is the module which has the smallest slot No. in the base unit.

■Link direct device in a multiple CPU system

In a multiple CPU system, link direct devices cannot be used for the CC-Link IE Controller Network-equipped module controlled by another CPU module.

Cyclic data integrity assurance

This function assures the cyclic data integrity in units of 32 bits or station-based units.

○: Assured, ×: Not assured

Method	Description	Availability		
		Link refresh	Direct access to link devices	Access to buffer memory
32-bit data assurance	Assures data in 32-bit units. Data is automatically assured by satisfying assignment conditions of link devices.	○	○	○
Station-based block data assurance[1]	Assures data in station-based units. Data is assured by enabling the station-based block data assurance in the parameter setting.	○	×	×
Interlock program	Assures data of more than 32 bits. Data is assured by configuring interlocks on programs.	○	○	○

[1] When the software version of the Simple Motion module is "Ver.01":
The set parameter is ignored in the Simple Motion module and operate as "Disable". Assure data using interlock programs as required.
When the software version of the Simple Motion module is "Ver.02" or later:
To enable data assurance in an asynchronous station, read/write data by direct access in the inter-module synchronous interrupt program (I44) without using a link refresh.

Point

When there is a remote device station in the network, use station-based block data assurance. If it is disabled, the functions of the remote device station cannot be assured.

32-bit data assurance

The RWr and RWw data can be assured in 32-bit units.

■Data assurance at the time of direct access to link devices

When link refresh target devices are accessed, the integrity of 32-bit data can be assured by satisfying the following conditions.

- The start device No. of RWr, RWw is multiples of 2.
- The number of points assigned to RWr, RWw is multiples of 2.

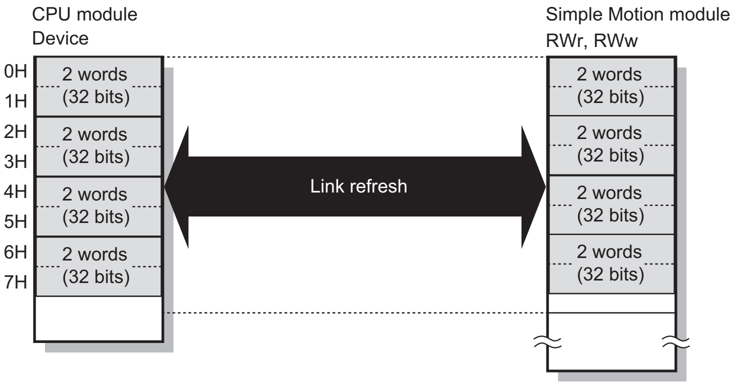
CPU module
Device
0H
1H
2H
3H
4H
5H
6H
7H
2 words (32 bits)
2 words (32 bits)
2 words (32 bits)
2 words (32 bits)
Link refresh
Simple Motion module
RWr, RWw
2 words (32 bits)
2 words (32 bits)
2 words (32 bits)
2 words (32 bits)

■Data integrity assurance at the time of access to buffer memory

The integrity of 32-bit data can be assured by satisfying the following conditions.

- Access using the DMOV instruction
- The start address of the buffer memory is multiples of 2.

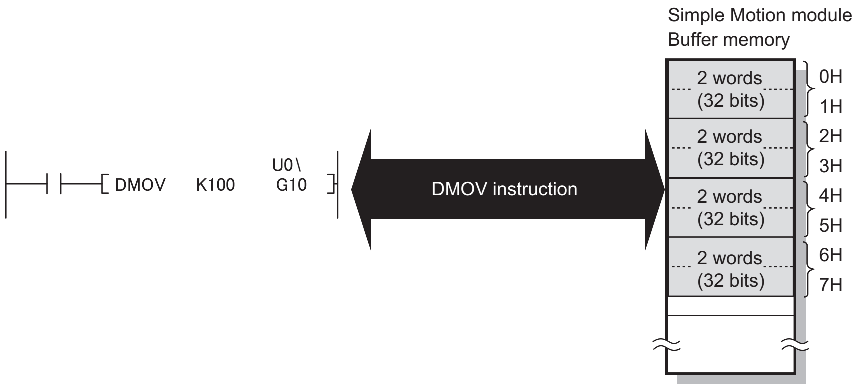

Point

For data assurance of more than 32 bits, use station-based block data assurance or interlock programs.

Station-based block data assurance

Integrity of the cyclic data is assured for each station by handshake between the CPU module and Simple Motion module for a link refresh.

Precautions

- When the software version of the Simple Motion module is "Ver.01":
  The set parameter is ignored in the Simple Motion module and operate as "Disable". Assure data using interlock programs as required.
- When the software version of the Simple Motion module is "Ver.02" or later:
  To enable data assurance in an asynchronous station, read/write data by direct access in the inter-module synchronous interrupt program (I44) without using a link refresh. There are restrictions on the operation by the inter-module synchronization setting, operation mode, and network synchronous communication.

<Inter-module synchronization valid>

Operation mode	Network communication setting	
	Synchronous	Asynchronous
High-speed	Enable	Disable
Normal	Enable	Enable

<Inter-module synchronization invalid>

Operation mode	Network communication setting	
	Synchronous	Asynchronous
High-speed	Disable	Disable
Normal	Disable	Enable

■Setting

Set station-based block data assurance under "Supplementary Cyclic Settings" in "Application Settings" of the master station. (☞ Page 73 Application Settings)

Once this setting is enabled on the master station, integrity of the data for all stations is assured for each station.

■Access to link devices

During a link refresh, data are assured for each station as shown below.

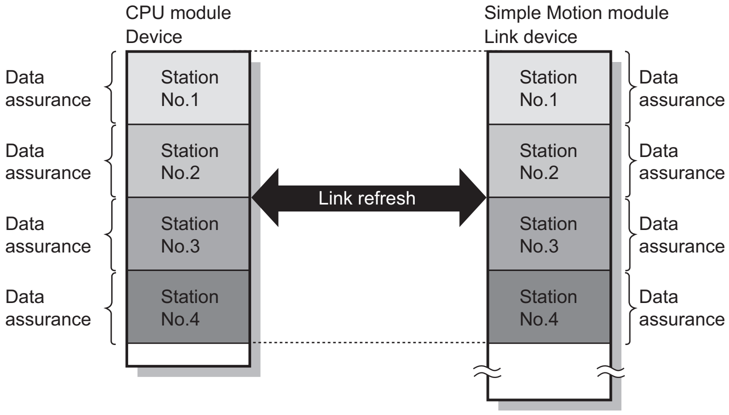
CPU module
Device
Simple Motion module
Link device
Data assurance
Station No.1
Station No.2
Station No.3
Station No.4
Link refresh

Interlock program

Data of more than 32 bits can be assured with the station-based block data assurance setting disabled. Use either of the following methods.

- Interlock using X and Y
- Interlock using devices other than X and Y (when X, Y cannot be used as an interlock device)

■Example of interlock using X and Y

An example of sending data in W0 to W3 of the master station (station No.0) to W1000 to W1003 of the local station (station No.1) is shown below. (X1000 and Y1000 are used for a handshake to the CPU module.)

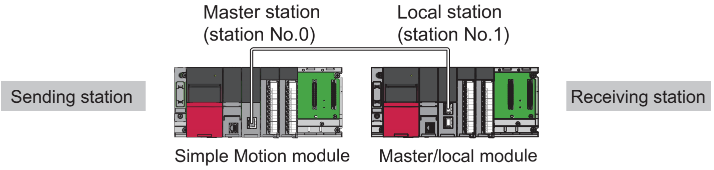
Master station
(station No.0)
Local station
(station No.1)
Sending station
Receiving station
Simple Motion module
Master/local module

- Data flow

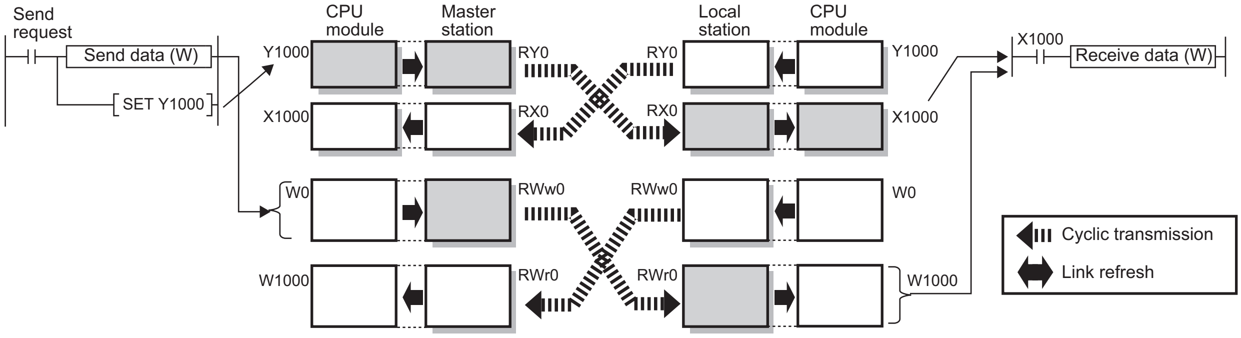
Send request
Send data (W)
SET Y1000
CPU module
Master station
Local station
CPU module
Y1000
X1000
W0
W1000
RY0
RX0
RWw0
RWr0
Receive data (W)
Cyclic transmission
Link refresh

- Program

Program example

Sending station: Master station (station No.0)

Classification	Description
Label to be defined	Define global labels as shown below: 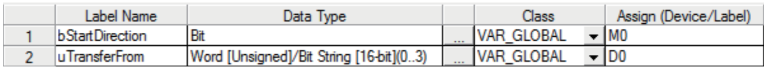

	Label Name	Data Type		Class	Assign (Device/Label)
1	bStartDirection	Bit	...	VAR_GLOBAL	M0
2	uTransferFrom	Word [Unsigned]/Bit String [16-bit](0..3)	...	VAR_GLOBAL	D0

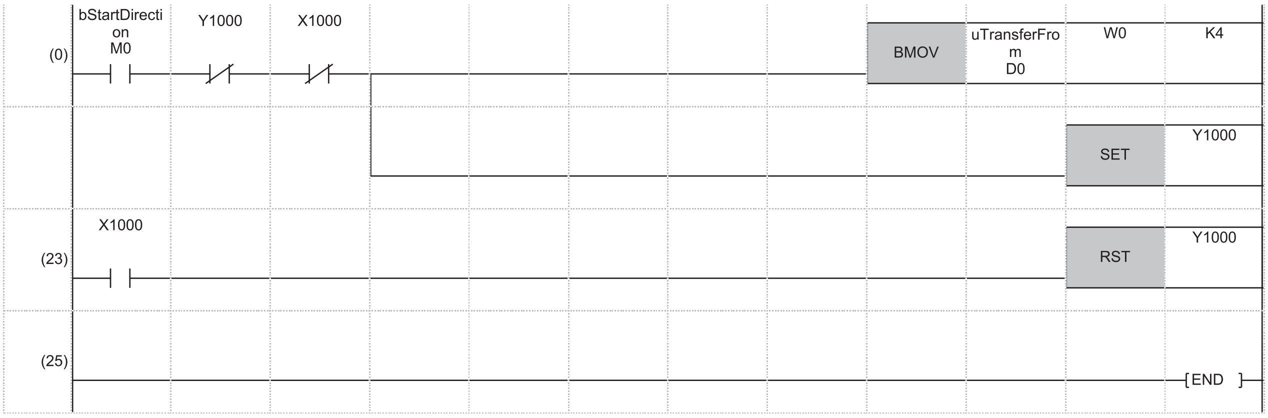
(0)
bStartDirection
M0
Y1000
X1000
BMOV
uTransferFrom
D0
W0
K4
SET
Y1000
(23)
X1000
RST
Y1000
(25)
END

Receiving station: Local station (station No.1)

Classification	Description
Label to be defined	Define global labels as shown below: 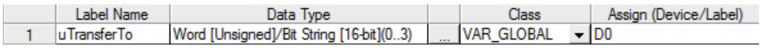

	Label Name	Data Type		Class	Assign (Device/Label)
1	uTransferTo	Word [Unsigned]/Bit String [16-bit](0..3)	...	VAR_GLOBAL	D0

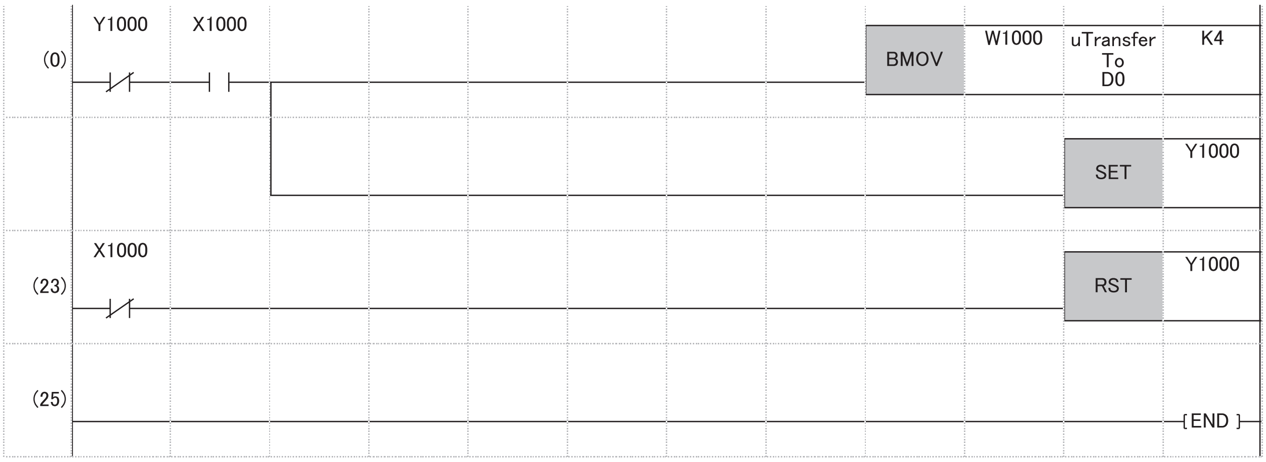
(0)
Y1000
X1000
BMOV
W1000
uTransferTo
D0
K4
SET
Y1000
(23)
X1000
RST
Y1000
(25)
END

- Program flow

❶ Sending station (0) "bStartDirection" (M0) is turned on.
❷ Sending station (0) The contents of "uTransferFrom" (D0 to D3) are stored in W0 to W3.
❸ Sending station (0) Upon completion of storage in W0 to W3, turn on Y1000 of the sending station for a handshake.
❹ Receiving station (0) Cyclic transmission sends RWw followed by RY, and X1000 of the receiving station turns on.
❺ Receiving station (0) The contents of W1000 to W1003 are stored in "uTransferTo" (D0 to D3).
❻ Receiving station (0) Upon completion of storage in "uTransferTo" (D0 to D3), turn on Y1000 of the receiving station for a handshake.
❼ Sending station (23) When X1000 of the sending station turns on, turn off Y1000 of the sending station.
❽ Receiving station (23) When X1000 of the receiving station turns off, turn off Y1000 of the receiving station.

■Example of interlock using devices other than X and Y

An example of sending data in W0 to W3 of the master station (station No.0) to W1000 to W1003 of the local station (station No.1) is shown below. This is a method used when X and Y cannot be used as interlock devices. (B0 and B1000 are used for a handshake to the CPU module.)

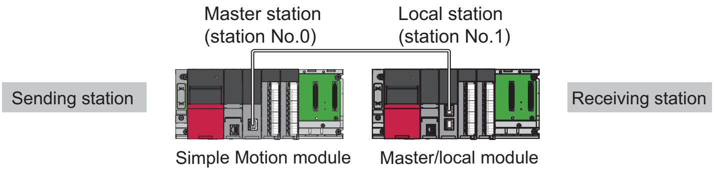
Master station
(station No.0)
Local station
(station No.1)
Sending station
Receiving station
Simple Motion module
Master/local module

- Data flow

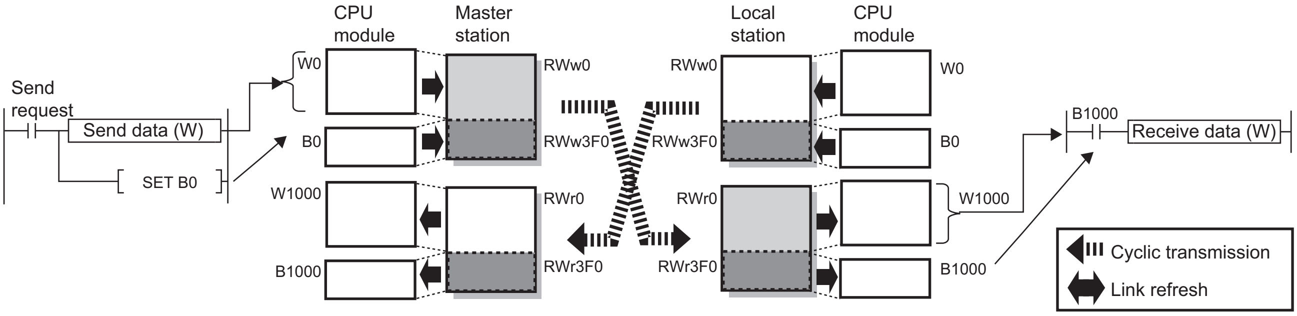
CPU module
Master station
Local station
CPU module
Send request
Send data (W)
SET B0
W0
B0
W1000
B1000
RWw0
RWw3F0
RWr0
RWr3F0
RWw0
RWw3F0
RWr0
RWr3F0
W0
B0
W1000
B1000
B1000
Receive data (W)
Cyclic transmission
Link refresh

- Program

Program example

Sending station: Master station (station No.0)

<table>
<tr><th>Classification</th><th>Description</th></tr>
<tr><td>Label to be defined</td><td>Define global labels as shown below:
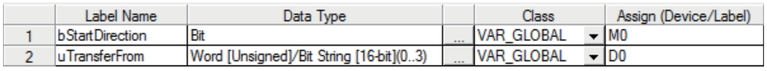<table><tr><th></th><th>Label Name</th><th>Data Type</th><th></th><th>Class</th><th>Assign (Device/Label)</th></tr><tr><td>1</td><td>bStartDirection</td><td>Bit</td><td>...</td><td>VAR_GLOBAL</td><td>M0</td></tr><tr><td>2</td><td>uTransferFrom</td><td>Word [Unsigned]/Bit String [16-bit](0..3)</td><td>...</td><td>VAR_GLOBAL</td><td>D0</td></tr></table></td></tr>
</table>

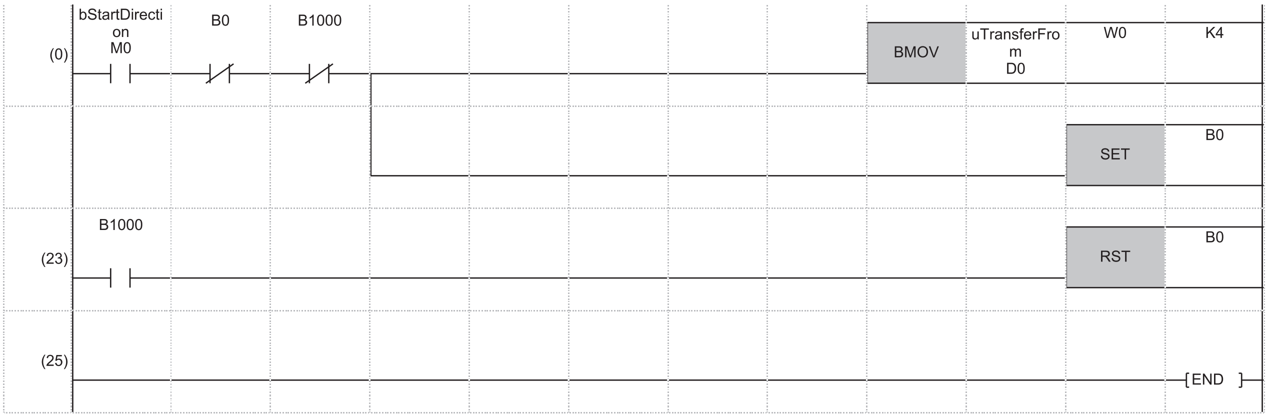
(0)
bStartDirection
M0
B0
B1000
BMOV
uTransferFrom
D0
W0
K4
SET
B0
(23)
B1000
RST
B0
(25)
END

Receiving station: Local station (station No.1)

Classification	Description
Label to be defined	Define global labels as shown below: 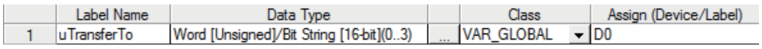

	Label Name	Data Type		Class	Assign (Device/Label)
1	uTransferTo	Word [Unsigned]/Bit String [16-bit](0..3)	...	VAR_GLOBAL	D0

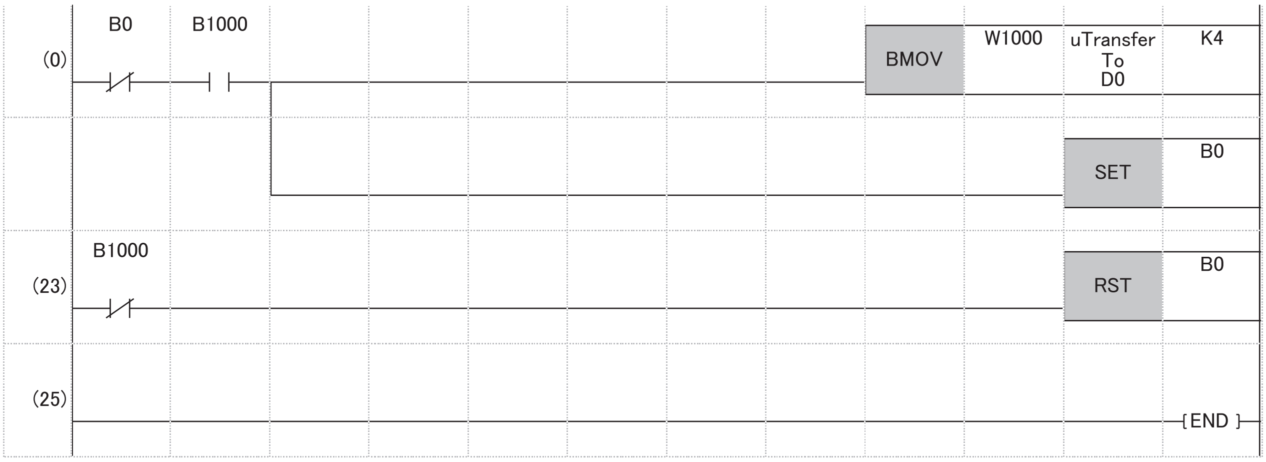

- Program flow

❶ Sending station (0) "bStartDirection" (M0) is turned on.

❷ Sending station (0) The contents of "uTransferFrom" (D0 to D3) are stored in W0 to W3.

❸ Sending station (0) Upon completion of storage in W0 to W3, turn on B0 of the sending station for a handshake.

❹ Receiving station (0) Cyclic transmission sends signals from RWw0 to RWw3EF followed by RWw3F0 and stores them in RWr0 to RWr3EF and RWr3F0 in this order at the receiving station. B1000 of the receiving station turns on.

❺ Receiving station (0) The contents of W1000 to W1003 are stored in "uTransferTo" (D0 to D3).

❻ Receiving station (0) Upon completion of storage in "uTransferTo" (D0 to D3), turn on B0 of the receiving station for a handshake.

❼ Sending station (23) When B1000 of the sending station turns on, turn off B0 of the sending station.

❽ Receiving station (23) When B1000 of the receiving station turns off, turn off B0 of the receiving station.

Interlink transmission

This function transfers data in the link devices of the master station to another network module on a relay station.

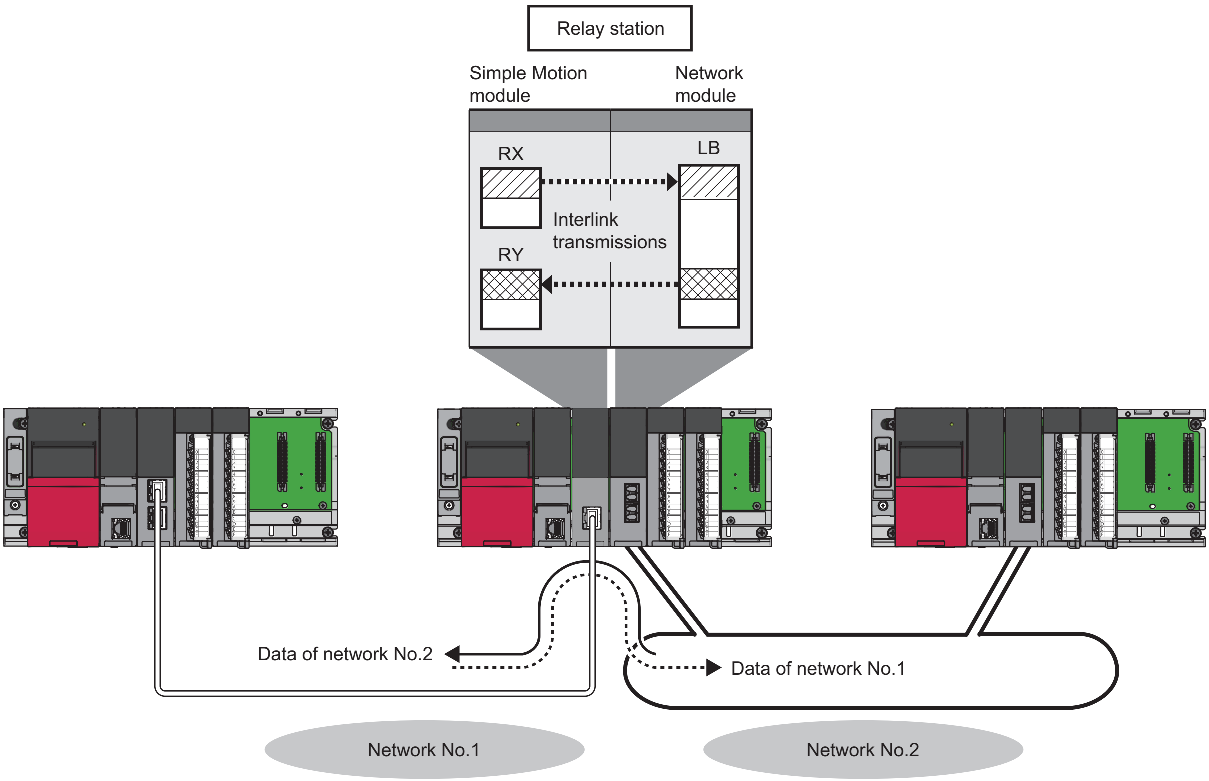
Relay station
Simple Motion module
Network module
RX
LB
Interlink transmissions
RY
Data of network No.2
Data of network No.1
Network No.1
Network No.2

Setting method

Set interlink transmission in "Interlink Transmission Settings" in "Application Settings". (☞ Page 76 Interlink Transmission Settings)

Precautions

For the precautions, refer to the following.

☞ Page 76 Interlink Transmission Settings

Input and output status settings when failure occurs

For the Simple Motion module, status of input from a data link faulty station and output status of cyclic data if a stop error occurs in the CPU module can be set.

Status	Range where the settings are enabled
Input status of data link faulty station	Whether to clear or hold the following RX input data can be selected. • Master station RX Even if "Clear" is set, input data will be held for two seconds after communication failure such as Ethernet cable disconnection. The RWr input data is held regardless of the setting. • Master station RWr
Cyclic data output when a stop error occurs in the CPU module	Whether to clear or hold the RY data (only the output data from the own station) of the master station can be selected.

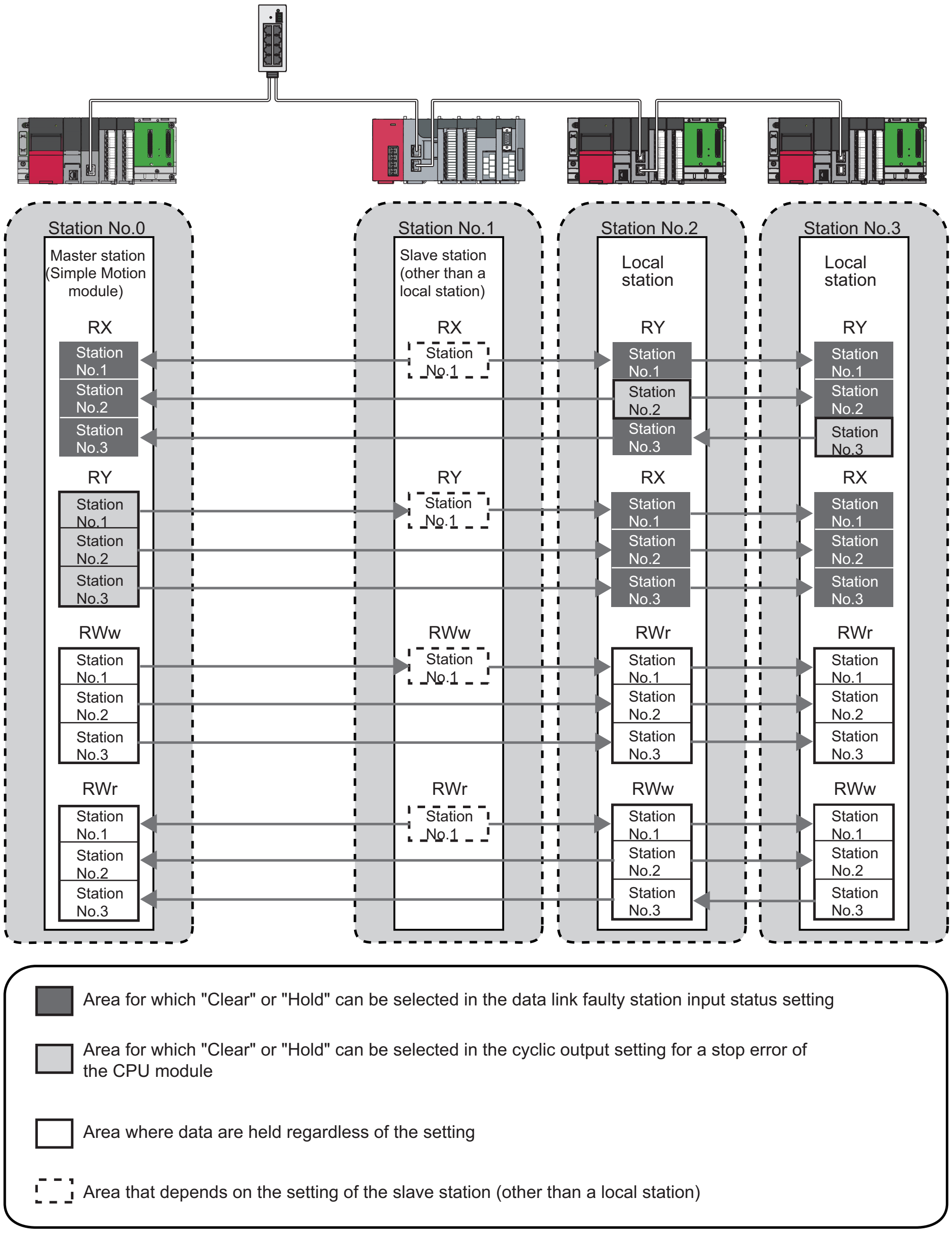
Station No.0
Master station (Simple Motion module)
Station No.1
Slave station (other than a local station)
Station No.2
Local station
Station No.3
Local station
RX
RY
RWw
RWr
Station No.1
Station No.2
Station No.3
▆ Area for which "Clear" or "Hold" can be selected in the data link faulty station input status setting
▨ Area for which "Clear" or "Hold" can be selected in the cyclic output setting for a stop error of the CPU module
☐ Area where data are held regardless of the setting
⬚ Area that depends on the setting of the slave station (other than a local station)

Setting method

■Input status of data link faulty station

Set the input status of data link faulty stations under "Supplementary Cyclic Settings" in "Application Settings". (☞ Page 73 Application Settings)

■Cyclic data output when a stop error occurs in the CPU module

Under "Supplementary Cyclic Settings" in "Application Settings", set the cyclic data output status for when a stop error occurs in the CPU module. (☞ Page 73 Application Settings)

Precautions

■When data link is stopped by users

When cyclic transmission is stopped using one of the following methods, the input status of the own station is held even if "Data Link Error Station Setting" under "I/O Maintenance Settings" is set to "Clear" under "Supplementary Cyclic Settings" in "Application Settings".

- CC-Link IE Field Network diagnostics (☞ Page 104 Checking the Network Status)
- Link special relay (SB), link special register (SW) (☞ Page 142 List of Link Special Relay (SB), Page 151 List of Link Special Register (SW))

■When a stop error of the CPU module occurs on a station with a data link error

When "Hold" is set to the following settings, the input status of the own station is held eve if "Data Link Error Station Setting" under "I/O Maintenance Settings" is set to "Clear" under "Supplementary Cyclic Settings" in "Application Settings".

- "Output Hold/Clear Setting during CPU STOP" under "I/O Maintenance Settings" under "Supplementary Cyclic Settings" in "Application Settings"
- "Output Mode upon CPU Error" under "I/O Maintenance Settings" of "Supplementary Cyclic Settings" in "Application Settings"

Output status setting for CPU STOP

When the CPU module mounted with the Simple Motion module is set to STOP, whether cyclic data output is held or cleared can be selected.

Setting method

Under "Supplementary Cyclic Settings" in "Application Settings", set the output status for the case where the CPU module switch is set to STOP. (☞ Page 73 Application Settings)

Precautions

■When the setting is disabled

When the link refresh source of RY is set to Y, the cyclic data output is cleared even if the output status setting for CPU STOP is set to be held. For RWw, the cyclic data output is held regardless of the device of the link refresh source, even if the output status setting for CPU STOP is set to be cleared.

■When the output status setting for CPU STOP is set to clear

When the CPU module is in the STOP state, the forced output to slave stations cannot be executed using the engineering tool.

■When data is refreshed by a link direct device

The output status for CPU STOP depends on the parameter specified in "Output Hold/Clear Setting during CPU STOP" under "I/O Maintenance Settings" under "Supplementary Cyclic Settings" in "Application Settings".

■When the Safety CPU is used

When the Safety CPU is in the safety mode, output of safety communications will be cleared even if "Hold" is set in "Output Hold/Clear Setting during CPU STOP" of "I/O Maintenance Settings" under "Supplementary Cyclic Settings" in "Application Settings".

Cyclic transmission stop and restart

This function stops the cyclic transmission during debugging and other operations. (Data reception from a slave station and data sending from the own station are stopped.) Also, the stopped cyclic transmission can be restarted. Transient transmission does not stop.

Cyclic transmission is stopped and restarted using the link start/stop of the CC-Link IE Field Network diagnostics. (☞ Page 116 Link Start/Stop)

1.4 Transient Transmission

This function allows communications with other stations when a request is made by a method such as a dedicated instruction and engineering tool. Communications with different networks is also possible.

Communications within the same network

This function performs the transient transmission to other stations using dedicated instructions and the engineering tool. For details on the dedicated instructions that can be used, refer to the following.

☞ Page 165 Dedicated Instruction

Ex.

Accessing a programmable controller of another station using the dedicated instruction (READ instruction)

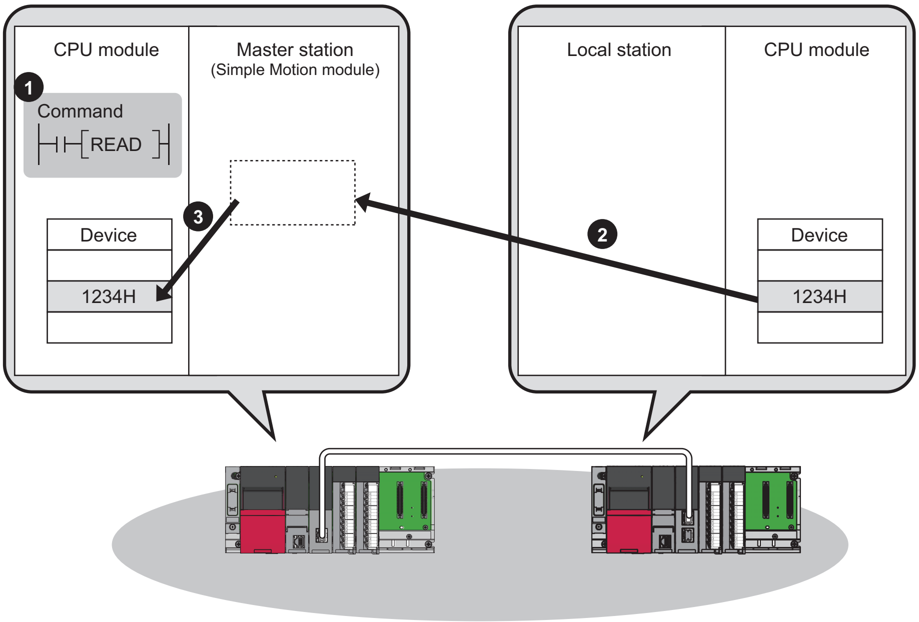
CPU module
Master station
(Simple Motion module)
①
Command
READ
Device
1234H
③
②
Local station
CPU module
Device
1234H

Communications with different networks

This function performs the transient transmission seamlessly to stations on different networks using dedicated instructions and the engineering tool.

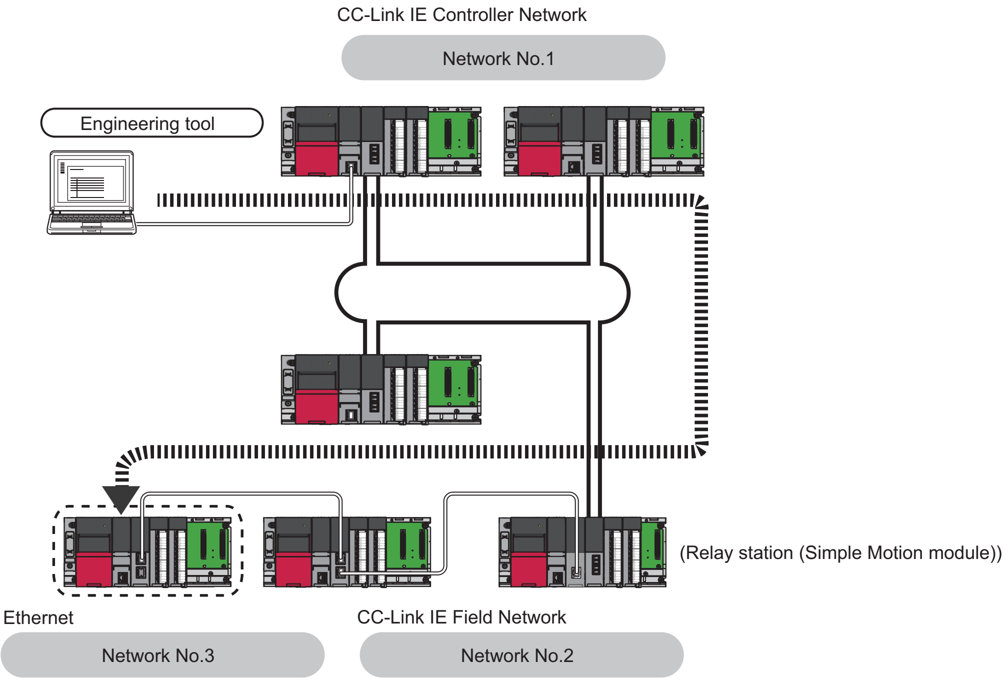
CC-Link IE Controller Network
Network No.1
Engineering tool
(Relay station (Simple Motion module))
Ethernet
Network No.3
CC-Link IE Field Network
Network No.2

Point

Communications can be made with stations up to eight networks apart (number of relay stations: 7).
(☞ Page 165 Dedicated Instruction)

When the networks consist of only MELSEC iQ-R series

Communication paths are automatically set for communication with the following networks of MELSEC iQ-R series.

- Ethernet
- CC-Link IE Controller Network
- CC-Link IE Field Network

■Setting method

Check that "Dynamic Routing" in "Application Settings" is set to "Enable".

Point

- Communication paths are automatically set, but they can also be manually set. (☞ Page 37 When the networks consist of MELSEC iQ-R series and other series)
- Communication paths cannot be automatically set to Ethernet-equipped modules connected via a router. Set communication paths manually for such modules. (☞ Page 37 When the networks consist of MELSEC iQ-R series and other series)

When the networks consist of MELSEC iQ-R series and other series

Setting communication paths allows communication with the following networks configured with modules other than MELSEC iQ-R series.

- Ethernet
- CC-Link IE Controller Network
- CC-Link IE Field Network
- MELSECNET/H
- MELSECNET/10

■Setting method

Set communication paths in "Routing Setting" of "CPU Parameter". (📖MELSEC iQ-R CPU Module User's Manual (Application))

Communication test

Communication test checks if transient transmission data can be properly routed from the own station to the communication target.

Take the following system configuration as an example of communication test procedure.

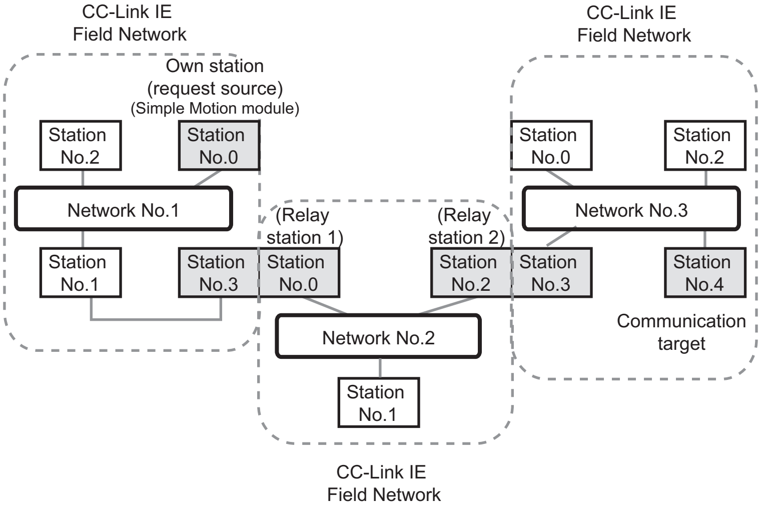
CC-Link IE
Field Network
Own station
(request source)
(Simple Motion module)
Station No.2
Station No.0
Network No.1
Station No.1
Station No.3
CC-Link IE
Field Network
Station No.0
Station No.2
Network No.3
(Relay station 1)
Station No.0
(Relay station 2)
Station No.2
Station No.3
Station No.4
Communication target
Network No.2
Station No.1
CC-Link IE
Field Network

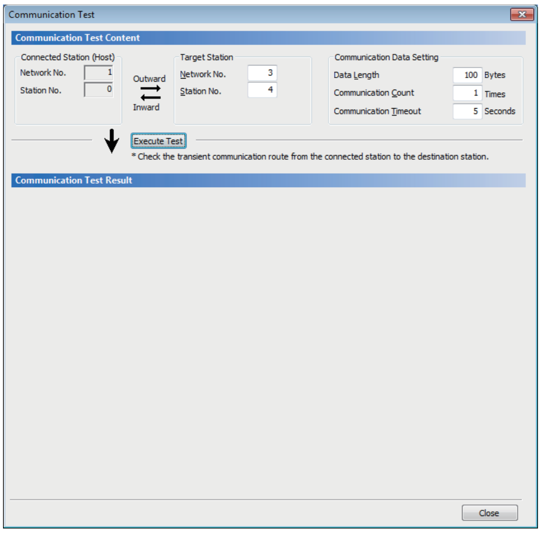
Communication Test

Communication Test Content

Connected Station (Host)
Network No. 1
Station No. 0

Outward ⇄ Inward

Target Station
Network No. 3
Station No. 4

Communication Data Setting
Data Length 100 Bytes
Communication Count 1 Times
Communication Timeout 5 Seconds

Execute Test

* Check the transient communication route from the connected station to the destination station.

Communication Test Result

1. Open the "Communication Test" window and enter values for "Target Station" and "Communication Data Setting".

   [Diagnostics] ⇨ [CC-Link IE Field Diagnostics] ⇨ [Communication Test] button

2. Click the [Execute Test] button to execute the communication test. If an error occurs, take corrective actions according to the error message.

Precautions

- When a relay sending station is set to "Target Station", only an error code appears without an error message. Set a relay receiving station to "Target Station".

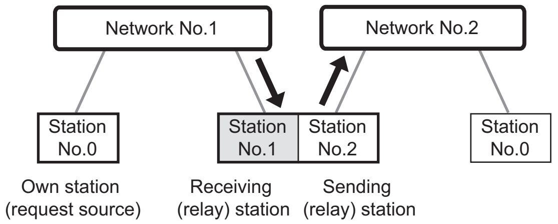
Network No.1
Network No.2
Station No.0
Station No.1
Station No.2
Station No.0
Own station (request source)
Receiving (relay) station
Sending (relay) station

- When a station mounted on top of the same base unit (main base unit and extension base unit) is set to "Target Station", only an error code appears without an error message. Set a station mounted on the different base unit to "Target Station".

1.5 IP Packet Transfer Function

This function enables communications using the specified IP address over CC-Link IE Field Network.
For example, a personal computer can communicate with the FTP server.
With this function, two networks of CC-Link IE Field Network and Ethernet are not required, resulting in reduced wiring cost.

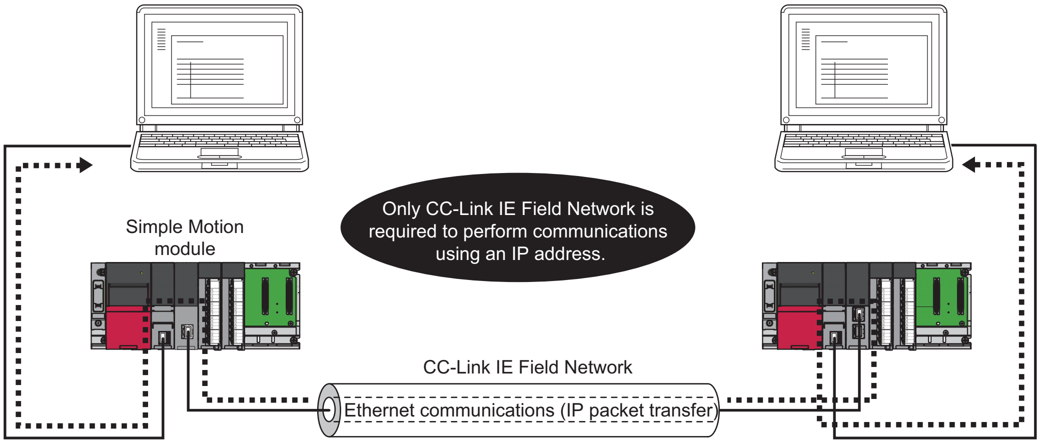
Simple Motion module
Only CC-Link IE Field Network is required to perform communications using an IP address.
CC-Link IE Field Network
Ethernet communications (IP packet transfer)

Point

The data that are communicated using the IP packet transfer function are communicated separately by the link scan of the CC-Link IE Controller Network.
Because of this, the speed of communications using the IP packet transfer function is slower than the speed of communications with the Ethernet line.

System configuration

The IP packet transfer function allows communications to be performed by connecting an Ethernet device to one of the following devices.

Connecting Ethernet devices

■Connecting an Ethernet device to an Ethernet-equipped module

Connect an Ethernet device to an Ethernet-equipped module.

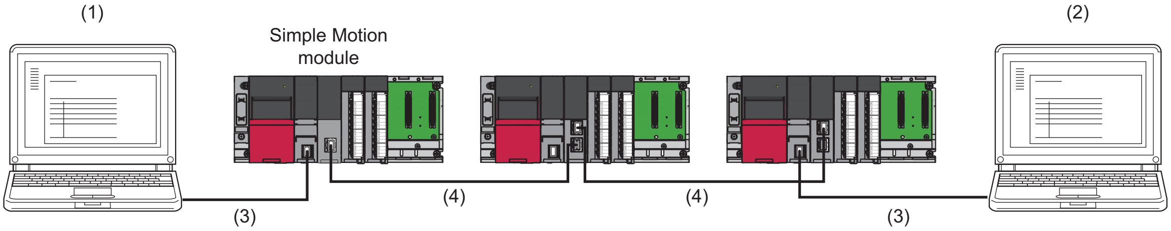
(1)
(2)
Simple Motion module
(3)
(4)
(4)
(3)

(1) Ethernet device (request source device)
(2) Ethernet device (request destination device)
(3) Ethernet
(4) CC-Link IE Field Network

Point

The IP packet transfer function can be used on the remote head module. An Ethernet device can also be connected by mounting the RJ71EN71 on the remote head module.

■Connecting an Ethernet device to a module compatible with the CC-Link IE Field Network gateway setting

Connect an Ethernet device to a module compatible with the CC-Link IE Field Network gateway setting (such as an Ethernet adapter module).

Doing so allows communications to be performed with an Ethernet device having a different network address.

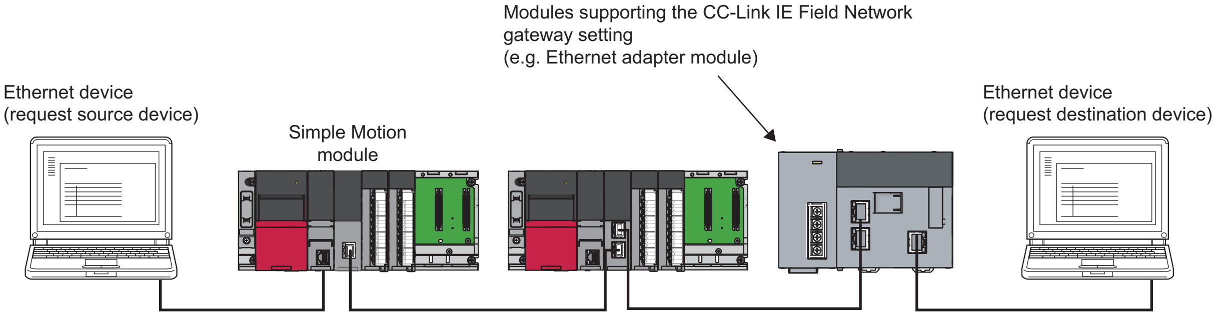
Modules supporting the CC-Link IE Field Network gateway setting
(e.g. Ethernet adapter module)
Ethernet device
(request source device)
Simple Motion module
Ethernet device
(request destination device)

Setting

To use the IP packet transfer function, the following items need to be set.

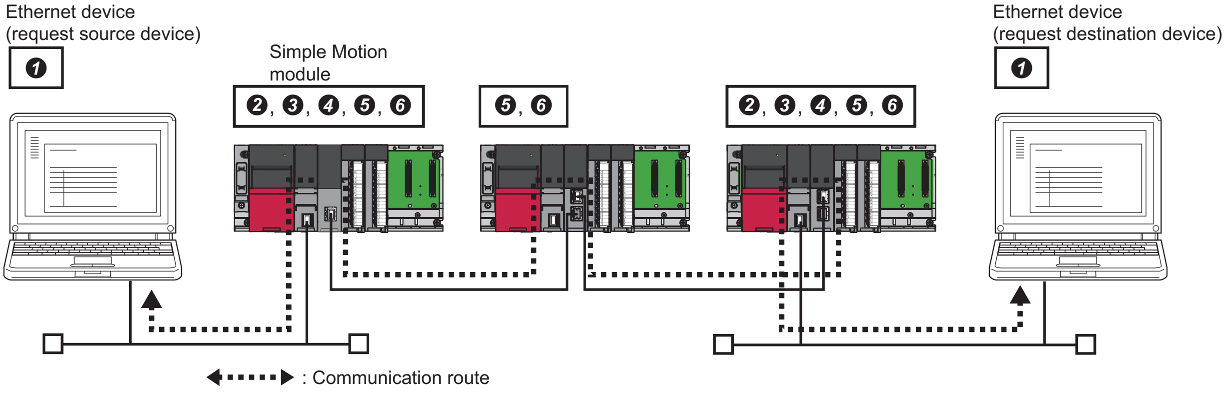

❶ Ethernet device gateway address setting
Set the IP address of the Ethernet-equipped module connected to an Ethernet device in the gateway address of the Ethernet device used.

❷ IP address setting of the Ethernet-equipped module (☞ Page 44 Setting in the Ethernet-equipped module)

❸ Setting of the network No. and station No. of the RJ71EN71 or the RnENCPU (network part) connected to the Ethernet device
When the RJ71EN71 or the RnENCPU (network part) is set for the Ethernet-equipped module connected to the Ethernet device, set "Communications by Network No./Station No." in the module parameter of the Ethernet to "Enable".

❹ IP packet transfer setting (☞ Page 44 Setting in the Ethernet-equipped module)
This setting is required for the IP packet to be passed between an Ethernet-equipped module and a relay station.

❺ IP address setting of a Simple Motion module (☞ Page 44 Setting in the master station)

❻ Routing parameter setting
Set routing parameters in the following cases. (☞ Page 45 Routing parameter setting)
·When modules other than MELSEC iQ-R series exist in the communication path
·When an Ethernet device needs to be connected to a module that does not support routing parameters

Point

- When the Ethernet device is a personal computer (only Ethernet devices having the route command, such as Microsoft® Windows®), it is recommended to set the gateway address using the route command. If the gateway address is set in the default gateway, packets not related to the IP packet transfer are also transmitted through the CPU module. Consequently, the service processing of the CPU module drops under heavy load, causing other service processings to be slow or other problems. For the gateway address setting of when an Ethernet device is connected to a module other than an Ethernet-equipped module, refer to the manual for the module connected to the Ethernet device.
- After the setting is completed, execute the IP communication test to check for an error in the communication path. (☞ Page 46 IP communication test)

Rules for the IP address setting

IP addresses specified for the IP packet transfer function need to satisfy the following rules.

Device to be set	Setting range of the IP address		
	First and second octets	**Third octet**	**Fourth octet**
Ethernet device	❶ 0.0 to 223.255[*1] (Same Nos. for the request source device, request destination device, and modules between them)	❷, ❸, ❹ 1 to 239[*1] (Same No. for the Ethernet device and the Ethernet-equipped module)	❷ 1 to 120[*1]
Ethernet-equipped module connected to the Ethernet device			
Simple Motion module		❷, ❹ Automatically set (network No. of the own station) 1 to 239	❷ Automatically set (station No. of the own station) • 1 to 120 • 125 (125 is always set in the master station.)
Remote head module	❺ Automatically set (Same value as the master station) 0.0 to 223.255		
Simple Motion module on the communication path (not connected to an Ethernet device)	IP address setting not required		

*1 Set the Nos. according to the range applicable to the Ethernet device used. The range may not apply depending on the Ethernet device. Check the specifications of the Ethernet device used.

❶ Use the same Nos. for the first and second octets of the IP addresses of the request source device, request destination device, and modules between them.

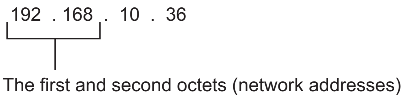
192 . 168 . 10 . 36
The first and second octets (network addresses)

❷ For the IP addresses of the Ethernet-equipped modules, set a No. between 1 and 239 for the third octet and a No. between 1 and 120 for the fourth octet. The network No. of the own station is automatically assigned to the third octet of the IP address of the Simple Motion module and remote head modules each. The station No. of the own station is automatically assigned to the fourth octet of the IP address of the Simple Motion module or remote head modules each. (The fourth octet of the IP address of the master station is always 125.)

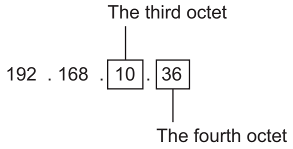
The third octet
192 . 168 . 10 . 36
The fourth octet

❸ Use the same No. for the third octet (network No.) of the IP addresses of an Ethernet device and a Ethernet-equipped module connected to the Ethernet device.

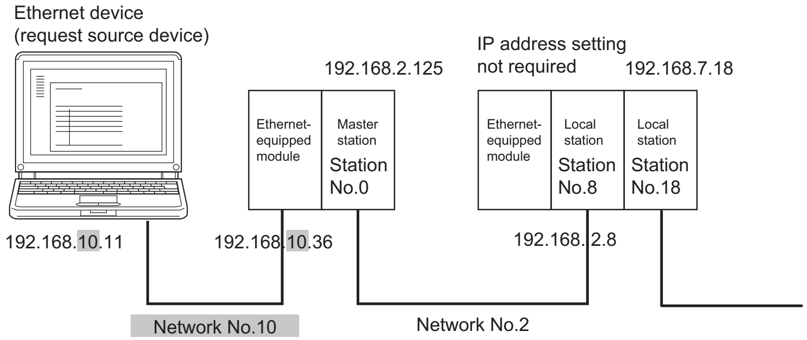
Ethernet device
(request source device)
192.168.2.125
IP address setting
not required
192.168.7.18
Ethernet-equipped module
Master station
Station No.0
Ethernet-equipped module
Local station
Station No.8
Local station
Station No.18
192.168.10.11
192.168.10.36
192.168.2.8
Network No.10
Network No.2

❹ Do not use the third octet (network No.) of the IP address same as that of other network modules and other CPU modules using the IP packet transfer function.

▨ Do not use the same network Nos. for those highlighted.

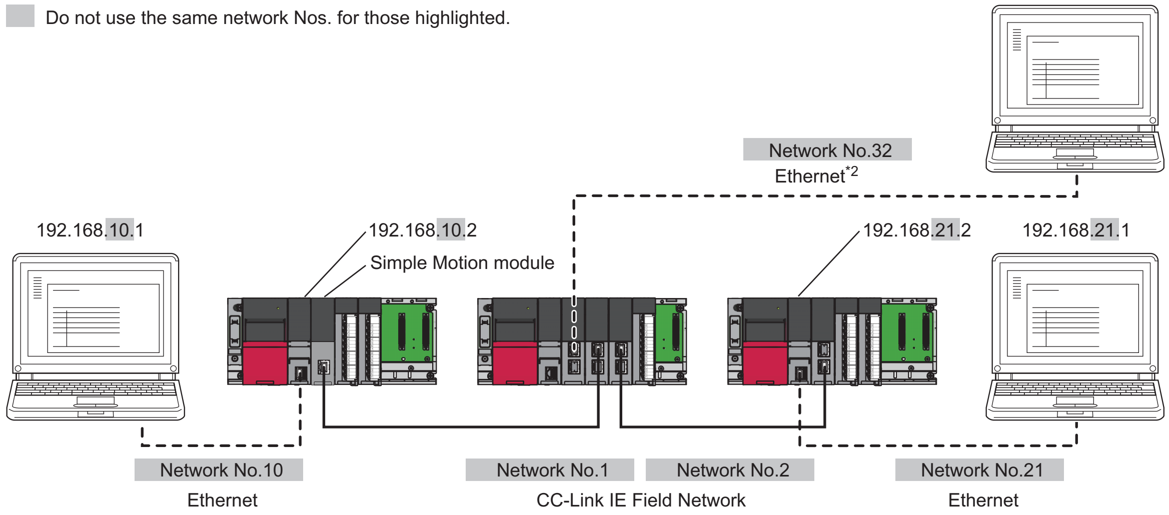
Network No.32
Ethernet*2
192.168.10.1
192.168.10.2
Simple Motion module
192.168.21.2
192.168.21.1
Network No.10
Ethernet
Network No.1
Network No.2
CC-Link IE Field Network
Network No.21
Ethernet

*2 Do not use the same network Nos. for those of network modules other than the Simple Motion module.

❺ The values in the first and second octets of the remote head module IP address are obtained from the master station IP address so that the same values as those of the master station can be set.

■CC-Link IE Field Network gateway setting

Through a module, such as an Ethernet adapter module, where the CC-Link IE Field Network gateway can be set, any IP address can be used for the Ethernet device side. (☞ Page 48 Access range, Page 54 When an Ethernet device with a different network address is accessed)

Note, however, that the network addresses on the CC-Link IE Field Network side must be the same.

For the IP address setting range, refer to the following table.

Device to be set	Setting range of the IP address		
	First and second octets	Third octet	Fourth octet
Ethernet device	Within the range applicable to the Ethernet device		
Module compatible with the CC-Link IE Field Network gateway setting	Within the range applicable to the module compatible with the CC-Link IE Field Network gateway setting (📖Manual for the module compatible with the CC-Link IE Field Network gateway setting)		
Simple Motion module	0.0 to 255.255	Automatically set (network No. of the own station) 1 to 239	Automatically set (station No. of the own station) • 1 to 120 • 125 (125 is always set in the master station.)
Remote head module	Automatically set (Same value as the master station) 0.0 to 223.255		
Ethernet-equipped module on the communication path (not connected to an Ethernet device)	IP address setting not required		

Point

When setting the IP address in each device, do not use the IP addresses already used for other devices.

Setting method

For a communication example, refer to the following.

☞ Page 52 Example of communications using the IP packet transfer function

■Setting in the Ethernet-equipped module

1. Set the IP address of the Ethernet-equipped module as follows.

🖱 Navigation window ⇨ "Parameter" ⇨ Target module ⇨ "Module Parameter" ⇨ "Basic Settings" ⇨ "Own Node Settings" ⇨ "IP Address"

Follow the rules to set the IP address. (☞ Page 42 Rules for the IP address setting)

2. Change the following setting to "Use".

🖱 Navigation window ⇨ "Parameter" ⇨ Target module ⇨ "Module Parameter" ⇨ "Application Settings" ⇨ "IP Packet Transfer Setting"

■Setting in the master station

1. Set the IP address of the master station as follows.

🖱 Navigation window ⇨ "Parameter" ⇨ "Module Information" ⇨ Target module ⇨ "Module Parameter (Network)" ⇨ "Application Settings" ⇨ "IP Address"

Follow the rules to set the IP address. (☞ Page 42 Rules for the IP address setting)

■Setting in the local stations

The IP address setting is not required for the local stations. The same network address as the master station is automatically assigned to the first and second octets. The network No. of the own station is assigned to the third octet, and the station No. of the own station is assigned to the fourth octet.

Routing parameter setting

Set routing parameters in the following cases.

- When modules other than MELSEC iQ-R series exist in the communication path
- When an Ethernet device needs to be connected to a module that does not support routing parameters

■When modules other than MELSEC iQ-R series exist in the communication path

To set routing parameters, refer to the following.

📖MELSEC iQ-R CPU Module User's Manual (Application)

■When an Ethernet device needs to be connected to a module that does not support routing parameters

When an Ethernet device needs to be connected to a module, such as an Ethernet adapter module, that does not support routing parameters, set the routing parameters so that communications are transmitted through the master station. Communications from a module that does not have the routing parameters are automatically transmitted through the master station. The communication paths must be the same for data sending and receiving; therefore, set the routing parameters so that communications are transmitted through the master station.

Ex.

Proper setting

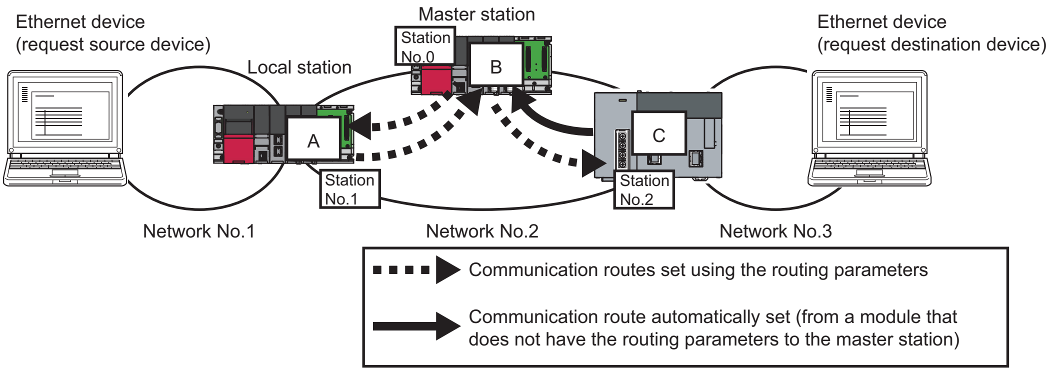
Ethernet device
(request source device)
Master station
Station No.0
B
Local station
A
Station No.1
C
Station No.2
Ethernet device
(request destination device)
Network No.1
Network No.2
Network No.3
Communication routes set using the routing parameters
Communication route automatically set (from a module that does not have the routing parameters to the master station)

Setting for A

Relay station		→	Target station
Network No.	Station		Network No.
2	0		3

Set this column to pass communications through the master station.

Setting for B

Relay station		→	Target station
Network No.	Station		Network No.
2	1		1
2	2		3

Setting for C

The setting is not required because the module does not have the routing parameters.

Ex.

Improper setting

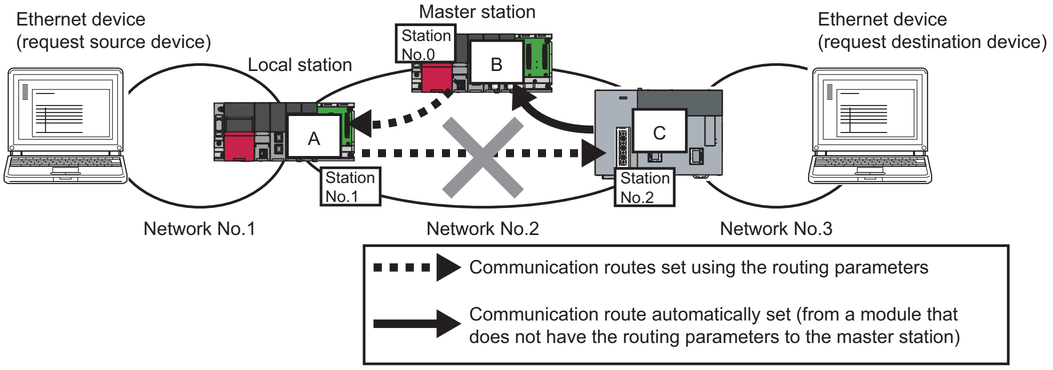
Ethernet device
(request source device)
Master station
Station No.0
B
Local station
A
Station No.1
C
Station No.2
Ethernet device
(request destination device)
Network No.1
Network No.2
Network No.3
Communication routes set using the routing parameters
Communication route automatically set (from a module that does not have the routing parameters to the master station)

Setting for A

Relay station			Target station
Network No.	Station	→	Network No.
2	2		3

Because the communication route for data sending is different from that for data receiving, an error occurs.[*1]

Setting for B

Relay station			Target station
Network No.	Station	→	Network No.
2	1		1

Setting for C

The setting is not required because the module does not have the routing parameters.

*1 The error of CPU module "IP communication test error" (error code: 4A28H) occurs in the IP communication test. (📖MELSEC iQ-R CPU Module User's Manual (Application))

IP communication test

This function checks whether no error occurs in the communication path within CC-Link IE Field Network when the IP packet transfer function is used. The following can be checked using the IP communication test:

- Cables are properly connected on the communication path.
- Parameters related to the IP packet transfer function, such as an IP address and routing parameters, are correctly set on the communication path.
- All the CPU modules and master/local modules on the communication path support the IP packet transfer function.

The following system configuration is used to explain the procedure of the IP communication test.

The IP communication test allows the communication paths in the dotted line above to be checked.

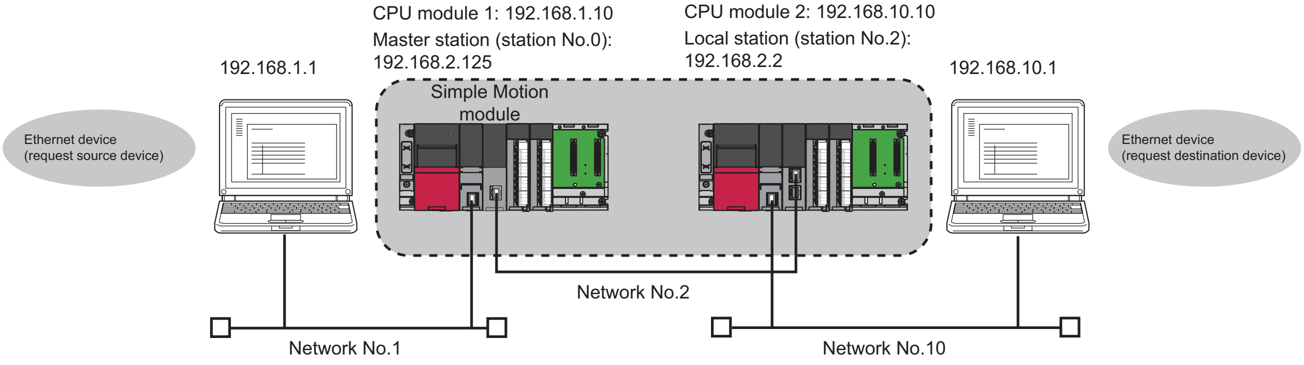
CPU module 1: 192.168.1.10
Master station (station No.0):
192.168.2.125
CPU module 2: 192.168.10.10
Local station (station No.2):
192.168.2.2
192.168.1.1
192.168.10.1
Simple Motion module
Ethernet device
(request source device)
Ethernet device
(request destination device)
Network No.2
Network No.1
Network No.10

1. Open the "IP Communication Test" window. Enter the IP address of the CPU module 2 or the local station (station No.2) connected to the request destination device in "Communication Target". When the module that is connected to the request destination device is an Ethernet adapter module, enter the IP address of the request destination device in "Communication Target".

[Diagnostics] ⇨ [CC-Link IE Field Diagnostics] ⇨ [IP Communication Test] button

2. Click on the [Execute Test] button to execute the test. When the test is completed, the route to the device set in "Communication Target" is displayed on the underside of the window. If the test fails, click the [Details] button in the "Error Information" area to check the error information.

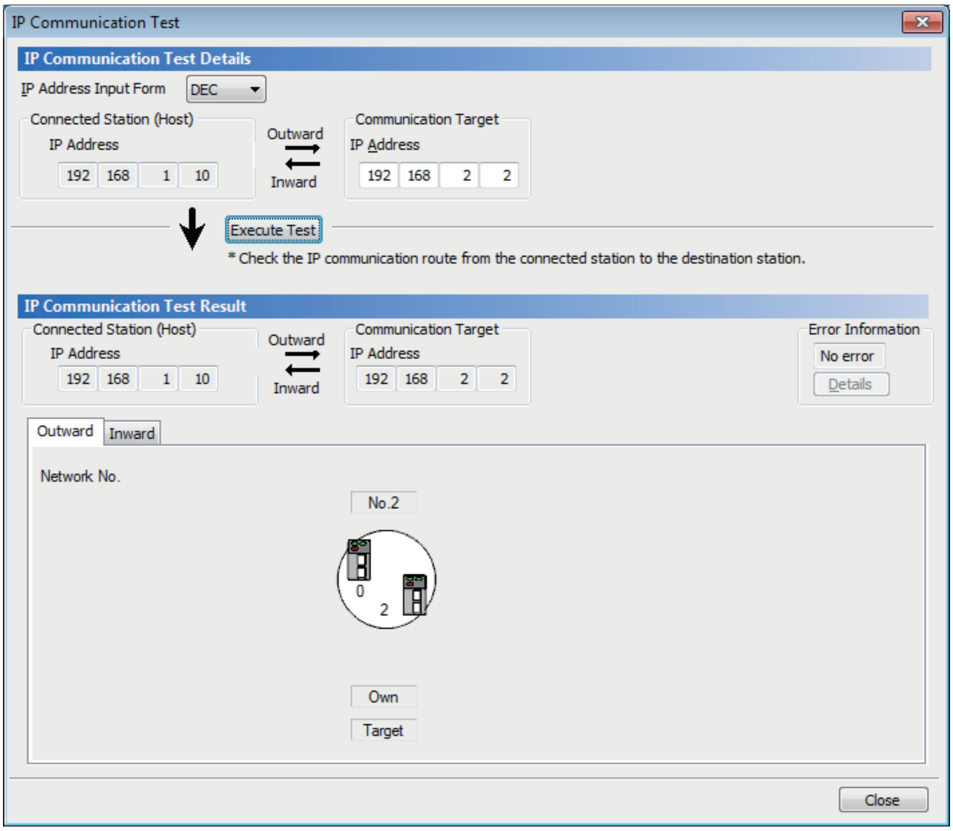

IP Communication Test

IP Communication Test Details

IP Address Input Form: DEC

Connected Station (Host) IP Address: 192 168 1 10

Communication Target IP Address: 192 168 2 2

* Check the IP communication route from the connected station to the destination station.

IP Communication Test Result

Connected Station (Host) IP Address: 192 168 1 10

Communication Target IP Address: 192 168 2 2

Error Information: No error

Point

- If the cause cannot be identified from the error information after the IP communication test is executed, or communications cannot be performed even though the IP communication test is normally completed, follow the troubleshooting instructions and take corrective actions. (☞ Page 126 When IP communications cannot be performed using the IP packet transfer function)
- Up to 127 levels of modules can be connected when the IP communication test is executed.
- When an Ethernet device (request destination device) is connected to an Ethernet-equipped module, the communication path to a master/local module, remote head module, or the Ethernet-equipped module connected to the Ethernet device (request destination device) can be checked using the IP communication test. Setting the IP address of the Ethernet device in "Communication Target" on the "IP Communication Test" window causes the error of the CPU module "IP communication test error" (error code: 4A2AH). (📖MELSEC iQ-R CPU Module User's Manual (Application))
- When an Ethernet device (request destination device) is connected to an Ethernet adapter module, the communication path to the Ethernet device (request destination device) can be checked using the IP communication test. For the IP communication test performed from an Ethernet adapter module, refer to the manual for the Ethernet adapter module.

Precautions

Communications cannot be performed via modules that do not support the IP packet transfer function such as MELSECNET/H. Only an error code appears without any information displayed in "Error Information".

Access range

The access range differs depending on whether the IP address setting conditions are met or not. (☞ Page 42 Rules for the IP address setting)

- When one of the Ethernet devices does not have an IP address that does not meet the IP address setting rules, both of the request source device and request destination device need to be connected to a module compatible with the CC-Link IE Field Network gateway setting, such as an Ethernet adapter module. Setting the CC-Link IE Field Network gateway allows communications to be performed. (📖Manual for the module compatible with the CC-Link IE Field Network gateway setting used)
- To perform communications between Ethernet devices with an IP address following the setting rules, a module compatible with the CC-Link IE Field Network gateway setting is not required to be connected.

IP address that does not follow the IP address setting rules

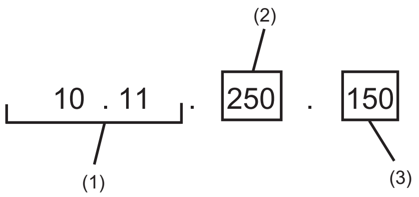
(2)
10 . 11 . 250 . 150
(1)
(3)

(1) Different network addresses
(2) Value other than 1 to 239
(3) Value other than 1 to 120

Ex.

Range of communications of when ❸ and ❹ are Ethernet devices with an IP address that does not meet the IP address setting rules

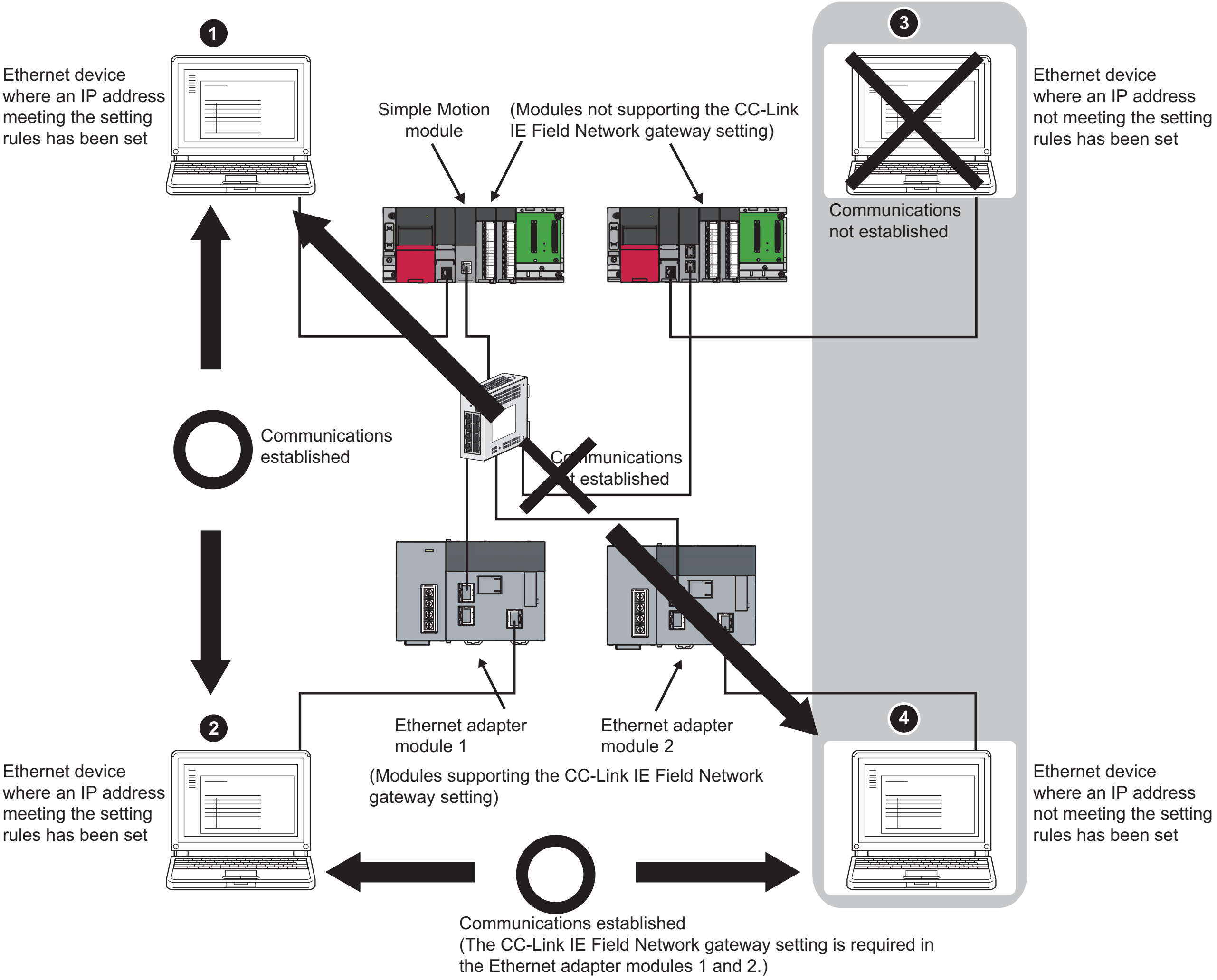
1
Ethernet device where an IP address meeting the setting rules has been set
Simple Motion module
(Modules not supporting the CC-Link IE Field Network gateway setting)
3
Ethernet device where an IP address not meeting the setting rules has been set
Communications not established
Communications established
Communications not established
2
Ethernet device where an IP address meeting the setting rules has been set
Ethernet adapter module 1
Ethernet adapter module 2
(Modules supporting the CC-Link IE Field Network gateway setting)
4
Ethernet device where an IP address not meeting the setting rules has been set

Communications established
(The CC-Link IE Field Network gateway setting is required in the Ethernet adapter modules 1 and 2.)

Relay using CC-Link IE Controller Network

The IP packet transfer function can be used through a relay from CC-Link IE Field Network to CC-Link IE Controller Network.

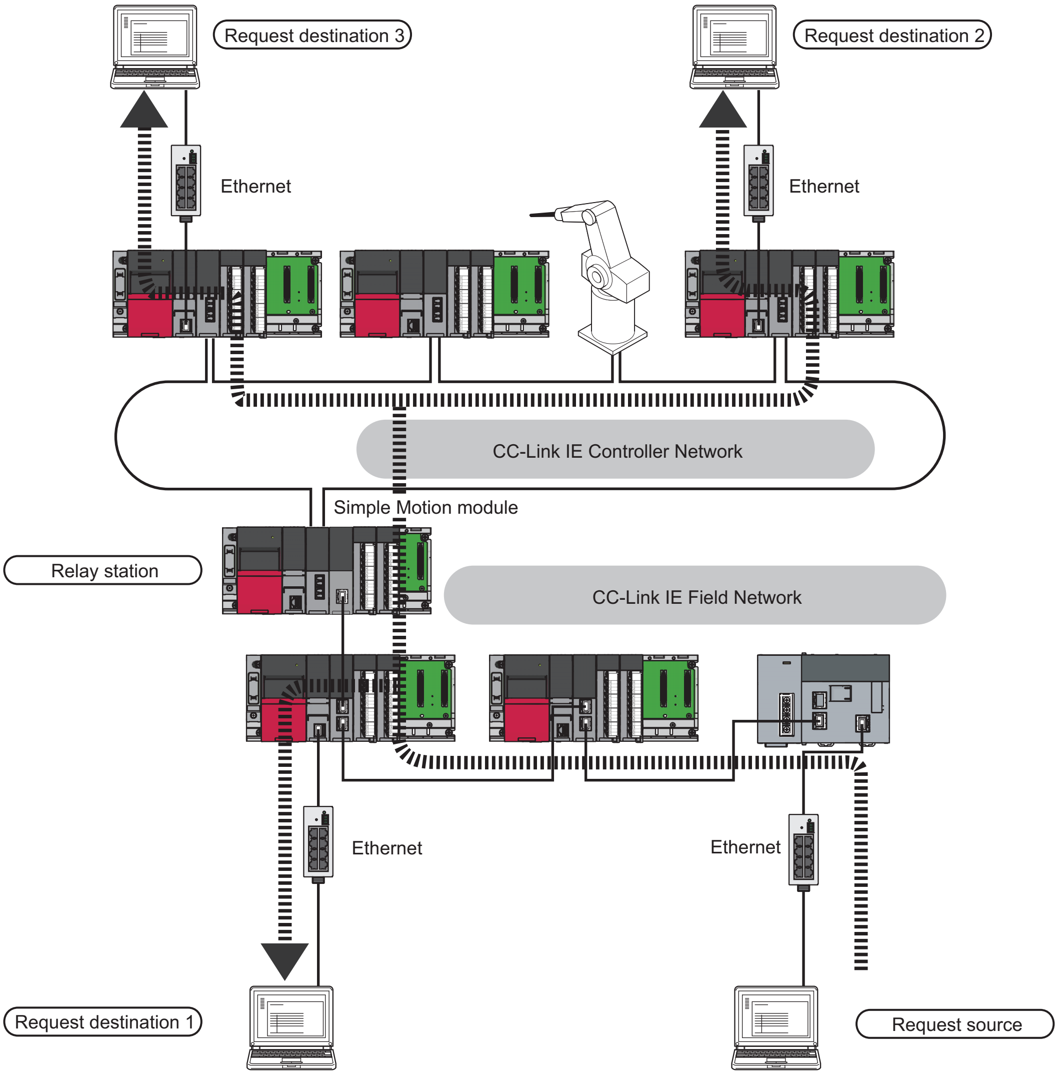
Request destination 3
Request destination 2
Ethernet
Ethernet
CC-Link IE Controller Network
Simple Motion module
Relay station
CC-Link IE Field Network
Ethernet
Ethernet
Request destination 1
Request source

Point

When using the IP packet transfer function on CC-Link IE Controller Network, refer to the following.

📖User's manual for the CC-Link IE Controller Network used

Precautions

Support for the IP packet transfer function

MELSEC iQ-R series modules support the IP packet transfer function from the first release.

To check whether other modules support the IP packet transfer function, refer to the following.

📖User's manual for the module used

Using different networks

Communications cannot be performed via modules that do not support the IP packet transfer function such as MELSECNET/H.

Communications before a baton pass is established (D LINK LED off)

The IP packet transfer function can be used after a baton pass was established. If communications are performed before that, a timeout error occurs in an Ethernet device (request source device). Whether the baton pass is established in the own station can be checked on the D LINK LED.

Precautions when using the UDP communication

Using UDP may reduce the reliability of data communications compared to TCP, causing a problem, such as data missing and changed order of data receiving. If any problem occurs, change the protocol to TCP.

Communications of Broadcast and Multicast

Communications of Broadcast and Multicast cannot be transferred using the IP packet transfer function. Use Unicast (identifying a single request destination) instead.

Precautions when configuring a multiple CPU system

❶ Set a CPU module connected to an Ethernet device as a control CPU of the Simple Motion module performing the IP packet transfer.

❷ Any CPU module in a relay station on CC-Link IE Field Network can be served as a control CPU of the Simple Motion module transferring the IP packet.

❸ When multiple Simple Motion modules or master/local modules with the same network No. are connected to one system, the Simple Motion module or the master/local module with the smallest slot No. transfers the IP packet. To transfer the IP packet, connect the Ethernet device to a control CPU of the Simple Motion module or the master/local module with the same network No. and smallest slot No.

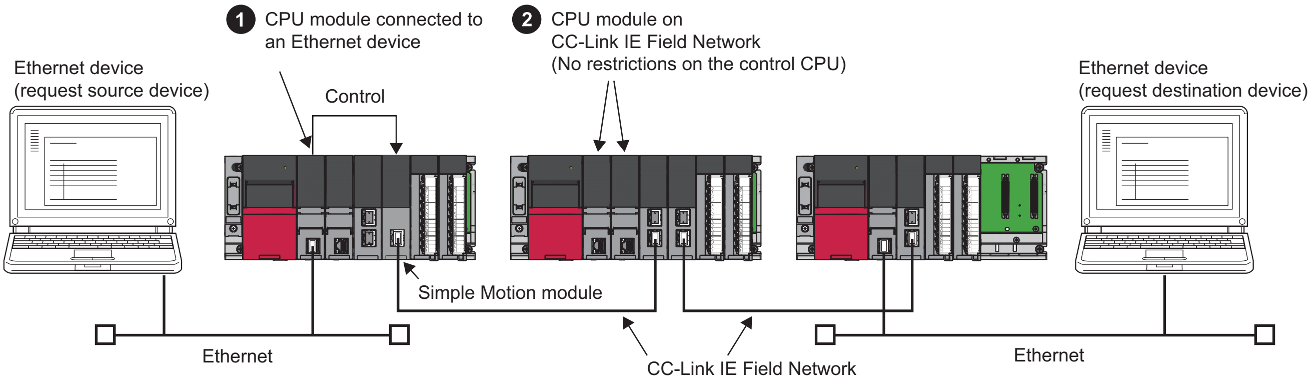
❶ CPU module connected to an Ethernet device
❷ CPU module on CC-Link IE Field Network (No restrictions on the control CPU)
Ethernet device (request source device)
Ethernet device (request destination device)
Control
Simple Motion module
Ethernet
CC-Link IE Field Network
Ethernet

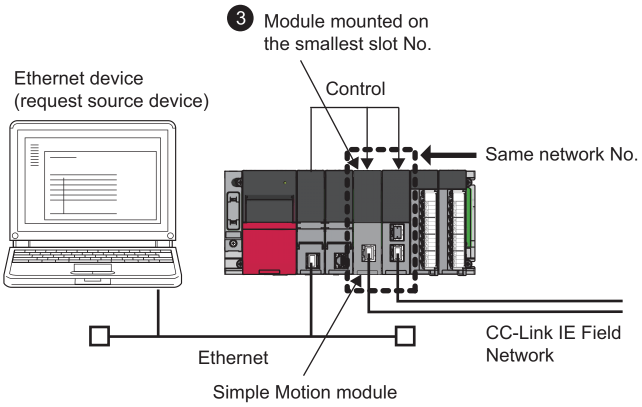
❸ Module mounted on the smallest slot No.
Ethernet device (request source device)
Control
Same network No.
CC-Link IE Field Network
Ethernet
Simple Motion module

Example of communications using the IP packet transfer function

When the request source and destination devices have the same network address

The following system configuration is used to explain an example of communications.

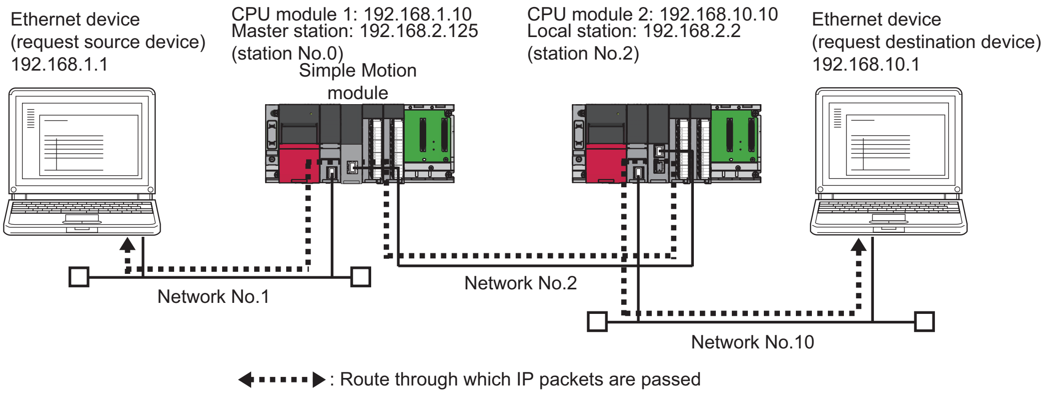
Ethernet device
(request source device)
192.168.1.1
CPU module 1: 192.168.1.10
Master station: 192.168.2.125
(station No.0)
Simple Motion module
CPU module 2: 192.168.10.10
Local station: 192.168.2.2
(station No.2)
Ethernet device
(request destination device)
192.168.10.1
Network No.1
Network No.2
Network No.10
: Route through which IP packets are passed

■Setting in the CPU module 1 and master station (station No.0)

1. Set the IP address of the CPU module 1 as follows.

Navigation window ⇨ "Parameter" ⇨ Target module ⇨ "Module Parameter" ⇨ "Basic Settings" ⇨ "Own Node Settings" ⇨ "IP Address"

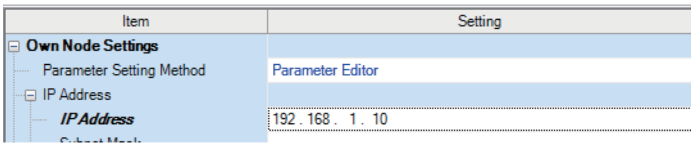

Item	Setting
Own Node Settings	
Parameter Setting Method	Parameter Editor
IP Address	
IP Address	192 . 168 . 1 . 10

2. Change the following setting to "Use" in the CPU module 1.

Navigation window ⇨ "Parameter" ⇨ Target module ⇨ "Module Parameter" ⇨ "Application Settings" ⇨ "IP Packet Transfer Setting"

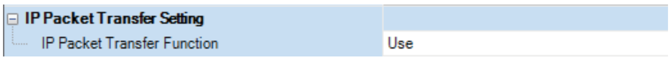

IP Packet Transfer Setting	
IP Packet Transfer Function	Use

3. Set the IP address of the master station (station No.0) as follows.

Navigation window ⇨ "Parameter" ⇨ "Module Information" ⇨ Target module ⇨ "Module Parameter (Network)" ⇨ "Application Settings" ⇨ "IP Address"

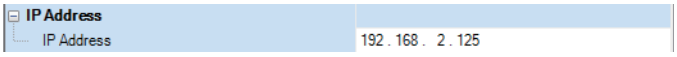

IP Address	
IP Address	192 . 168 . 2 . 125

4. Write the set parameters to the CPU module 1. Then reset the CPU module 1 or power off and on the system.

■Setting in the CPU module 2 and local station (station No.2)

1. Set the IP address of the CPU module 2 as follows.

Navigation window ⇨ "Parameter" ⇨ Target module ⇨ "Module Parameter" ⇨ "Basic Settings" ⇨ "Own Node Settings" ⇨ "IP Address"

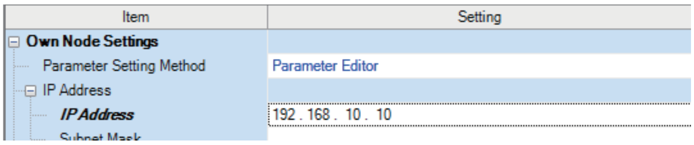

Item	Setting
Own Node Settings	
Parameter Setting Method	Parameter Editor
IP Address	
IP Address	192 . 168 . 10 . 10
Subnet Mask	

2. Change the following setting to "Use" in the CPU module 2.

Navigation window ⇨ "Parameter" ⇨ Target module ⇨ "Module Parameter" ⇨ "Application Settings" ⇨ "IP Packet Transfer Setting"

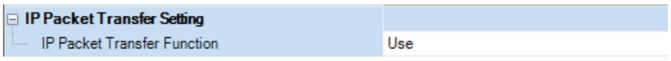

IP Packet Transfer Setting	
IP Packet Transfer Function	Use

3. The local station (station No.2) does not require an IP address.

The network address set in the master station (station No.0) is automatically assigned.

4. Write the set parameters to the CPU module 2. Then reset the CPU module 2 or power off and on the system.

■Checking the status of communications

After the setting is completed in each module, execute the IP communication test to check for an error in the communication path on CC-Link IE Field Network. (☞ Page 46 IP communication test)

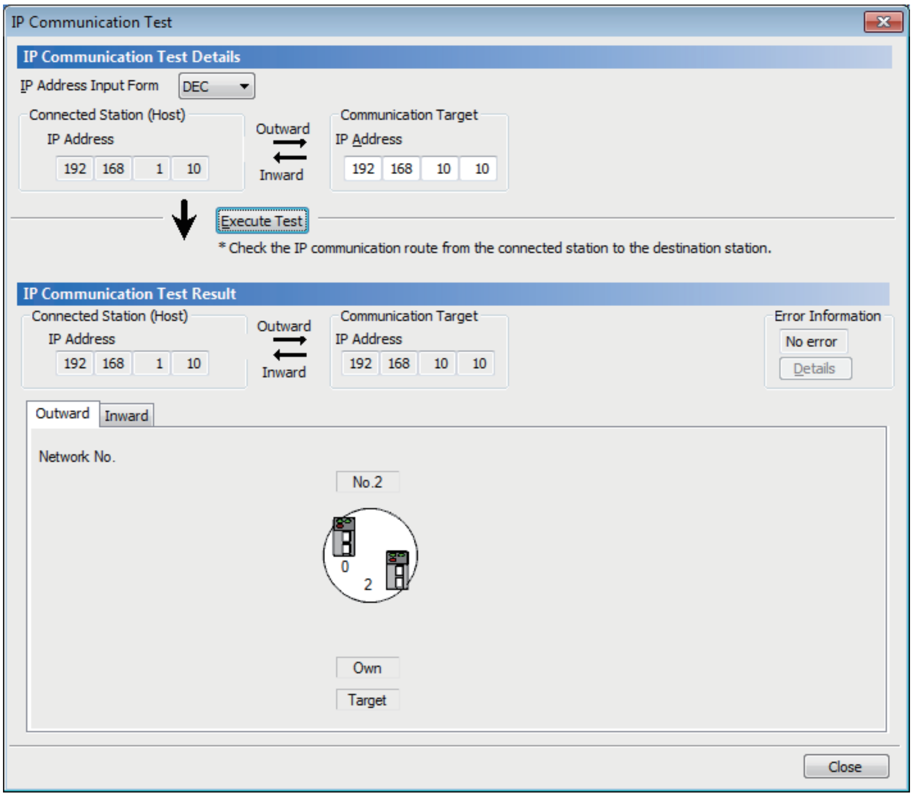

IP Communication Test

IP Communication Test Details

IP Address Input Form: DEC

Connected Station (Host) IP Address: 192 168 1 10

Communication Target IP Address: 192 168 10 10

* Check the IP communication route from the connected station to the destination station.

IP Communication Test Result

Connected Station (Host) IP Address: 192 168 1 10

Communication Target IP Address: 192 168 10 10

Error Information: No error

When an Ethernet device with a different network address is accessed

The following system configuration is used to explain an example of communications.

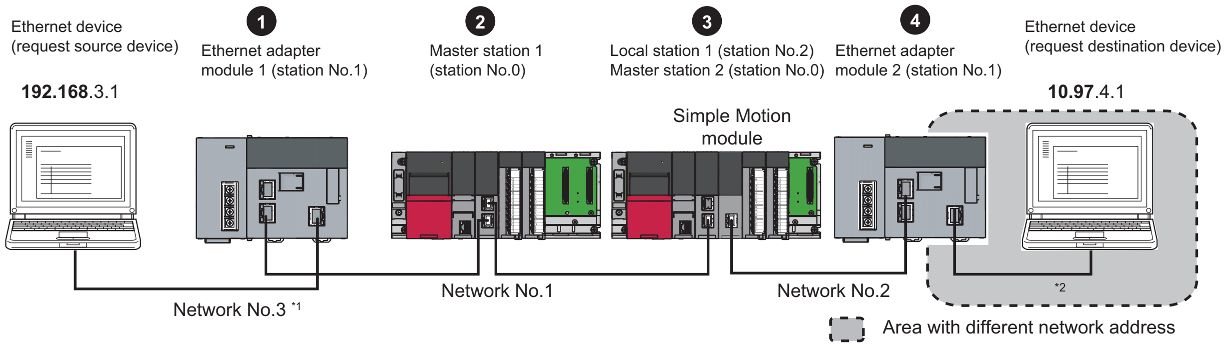
Ethernet device
(request source device)
192.168.3.1
1
Ethernet adapter
module 1 (station No.1)
2
Master station 1
(station No.0)
3
Local station 1 (station No.2)
Master station 2 (station No.0)
4
Ethernet adapter
module 2 (station No.1)
Ethernet device
(request destination device)
10.97.4.1
Simple Motion
module
Network No.3 *1
Network No.1
Network No.2
*2
Area with different network address

No.	Module transferring the IP packet		IP address
❶	Ethernet adapter module 1 (station No.1)	Ethernet part	192.168.3.30
		CC-Link IE Field Network part	192.168.1.1
❷	Master station 1 (station No.0)		192.168.1.125
❸	Local station 1 (station No.2)		192.168.1.2
	Master station 2 (station No.0)		192.168.2.125
❹	Ethernet adapter module 2 (station No.1)	Ethernet part	10.97.4.2
		CC-Link IE Field Network part	192.168.2.1

*1 When the network address of the Ethernet device and Ethernet adapter module (Ethernet part) is the same as that of the master station, the third octet of the IP address of the Ethernet device side is used as a network No. In the routing parameters of the CPU module, set the communication path to the network No.3.

*2 Because the network address of the Ethernet device (request destination device) is different from that of the master station, the Ethernet part does not have a network No. In the routing parameters, set the communication path to the network No.2.

■Setting in the Ethernet adapter module 1 (station No.1)

Use the configuration tool to set the IP address.

1. Set the IP address in the Ethernet adapter module 1 (Ethernet part) as follows.

Setting item tree ⇨ NZ2GF-ETB ⇨ [Parameter] ⇨ "Ethernet"

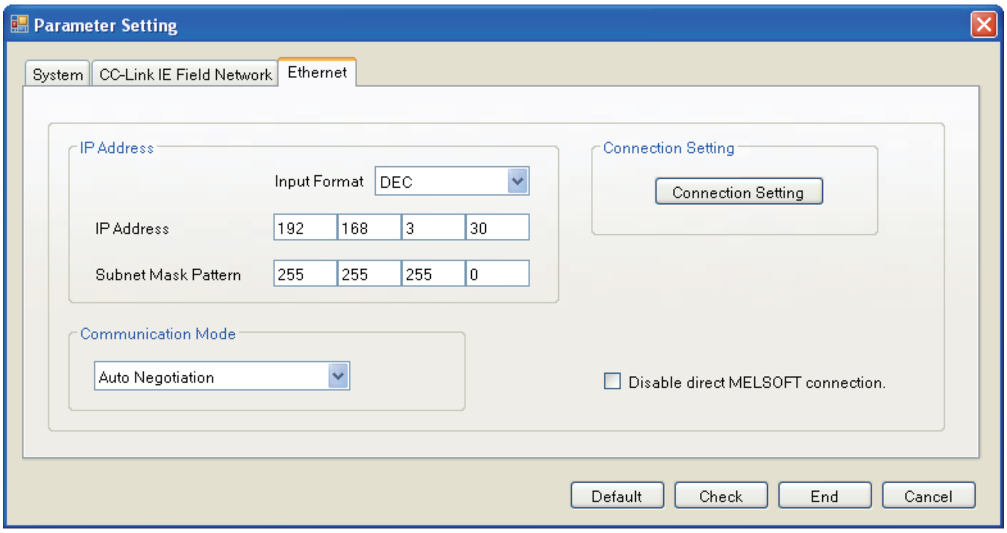
Parameter Setting
System
CC-Link IE Field Network
Ethernet
Connection Setting
Connection Setting
Default
Check
End
Cancel

IP Address
Input Format: DEC
IP Address: 192 168 3 30
Subnet Mask Pattern: 255 255 255 0

Communication Mode: Auto Negotiation

☐ Disable direct MELSOFT connection.

2. The IP address setting is not required for the Ethernet adapter module 1 (CC-Link IE Field Network part).

The network address set in the master station 1 (station No.0) is automatically assigned.

3. Set the CC-Link IE Field Network gateway in the Ethernet adapter module 1 as follows.

Setting item tree ⇨ NZ2GF-ETB ⇨ [Parameter] ⇨ "CC-Link IE Field Network" ⇨ [CC-Link IE Field Network Gateway Setting]

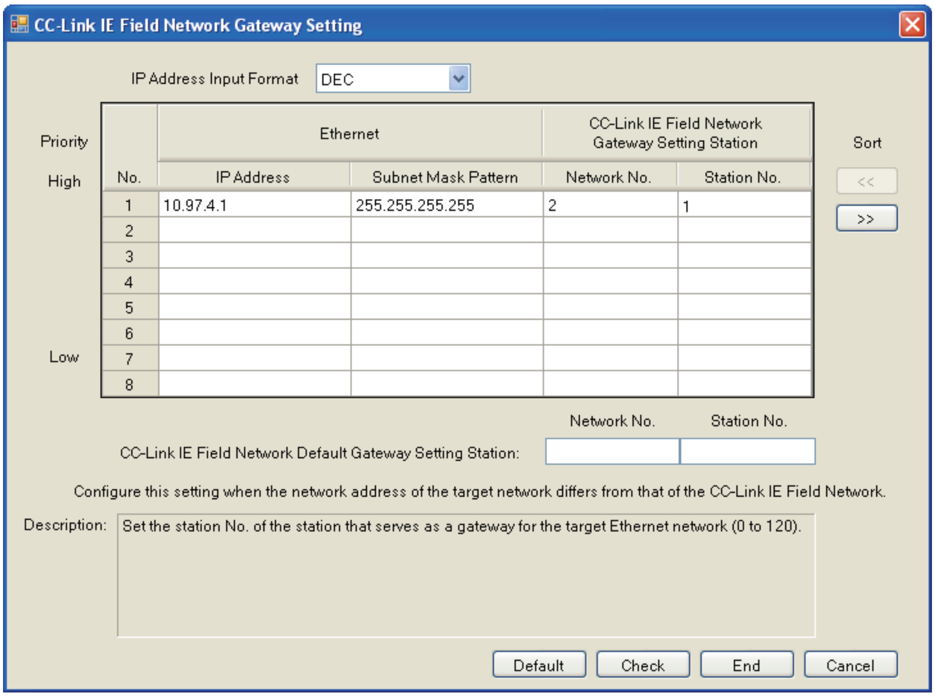

CC-Link IE Field Network Gateway Setting

IP Address Input Format: DEC

Priority	No.	Ethernet		CC-Link IE Field Network Gateway Setting Station	
		IP Address	Subnet Mask Pattern	Network No.	Station No.
High	1	10.97.4.1	255.255.255.255	2	1
	2				
	3				
	4				
	5				
	6				
Low	7				
	8				

CC-Link IE Field Network Default Gateway Setting Station: Network No. ____ Station No. ____

Configure this setting when the network address of the target network differs from that of the CC-Link IE Field Network.

Description: Set the station No. of the station that serves as a gateway for the target Ethernet network (0 to 120).

Sort
<<
>>
Default
Check
End
Cancel

Point

Set the gateway as follows.

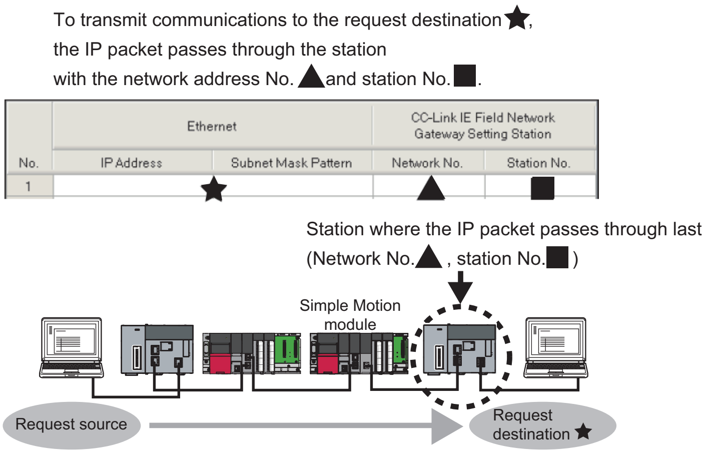

To transmit communications to the request destination ★,
the IP packet passes through the station
with the network address No. ▲ and station No. ■.
No.
Ethernet
IP Address
Subnet Mask Pattern
CC-Link IE Field Network Gateway Setting Station
Network No.
Station No.
1
★
▲
■
Station where the IP packet passes through last
(Network No. ▲ , station No. ■)
Simple Motion module
Request source
Request destination ★

4. Write the set parameters to the Ethernet adapter module 1.

■Setting in the CPU module 1 and master station 1 (station No.0)

1. Set the routing parameters to the CPU module 1 as follows.

Navigation window ⇨ "Parameter" ⇨ Target module ⇨ "CPU parameter" ⇨ "Routing Setting"

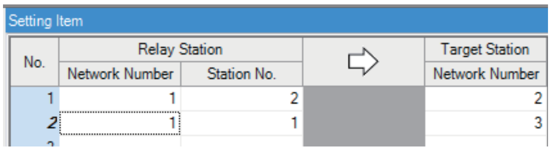

Setting Item

No.	Relay Station		⇨	Target Station
	Network Number	Station No.		Network Number
1	1	2		2
2	1	1		3

Because the network address is different from that of the request destination device, the Ethernet adapter module 2 (Ethernet part) does not have a network No. Set the communication path to the network No.2.

2. Set the IP address in the master station 1 (station No.0) as follows.

Navigation window ⇨ "Parameter" ⇨ "Module Information" ⇨ Target module ⇨ "Module Parameter (Network)" ⇨ "Application Settings" ⇨ "IP Address"

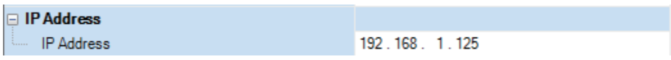

IP Address
IP Address: 192 . 168 . 1 . 125

3. Write the set parameters to the CPU module 1. Then reset the CPU module 1 or power off and on the system.

■Setting in the CPU module 2, local station 1 (station No.2), and master station 2 (station No.0)

1. Set the routing parameters to the CPU module 2 as follows.

Navigation window ⇨ "Parameter" ⇨ Target module ⇨ "CPU parameter" ⇨ "Routing Setting"

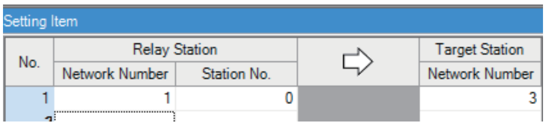

Setting Item

No.	Relay Station		⇨	Target Station
	Network Number	Station No.		Network Number
1	1	0		3

2. Set the IP address in the master station 2 (station No.0) as follows.

Navigation window ⇨ "Parameter" ⇨ "Module Information" ⇨ Target module ⇨ "Module Parameter (Network)" ⇨ "Application Settings" ⇨ "IP Address"

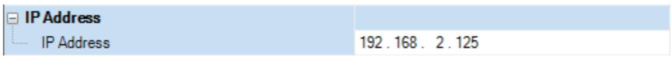

IP Address
IP Address: 192 . 168 . 2 . 125

3. The IP address setting is not required for the local station 1 (station No.2).
The network address set in the master station 1 (station No.0) is automatically assigned.

4. Write the set parameters to the CPU module 2. Then reset the CPU module 2 or power off and on the system.

■Setting in the Ethernet adapter module 2 (station No.1)

Use the configuration tool to set the IP address.

1. Set the IP address in the Ethernet adapter module 2 (Ethernet part) as follows.

Setting item tree ⇨ NZ2GF-ETB ⇨ [Parameter] ⇨ "Ethernet"

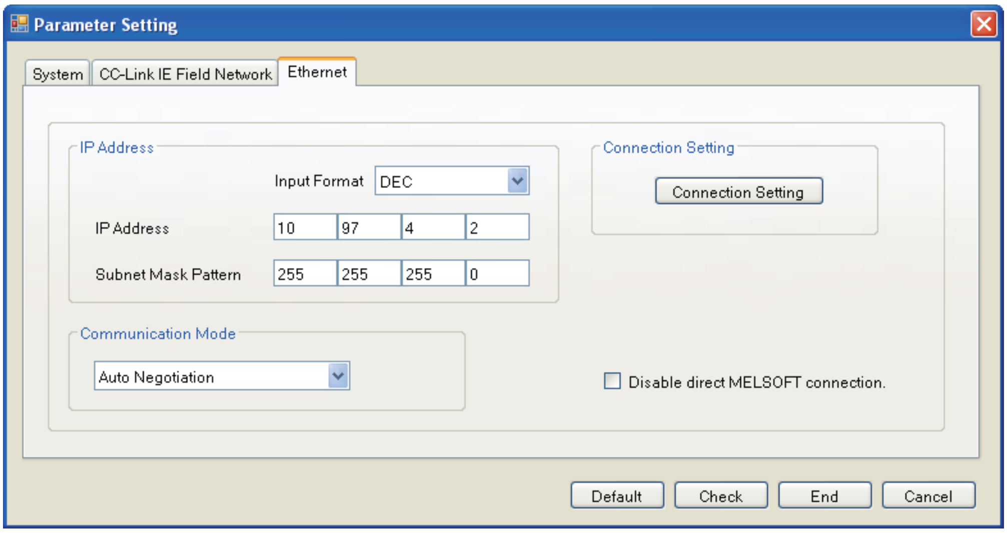

Parameter Setting

IP Address
Input Format: DEC
IP Address: 10 . 97 . 4 . 2
Subnet Mask Pattern: 255 . 255 . 255 . 0

Communication Mode: Auto Negotiation

☐ Disable direct MELSOFT connection.

2. The IP address setting is not required for the Ethernet adapter module 2 (CC-Link IE Field Network part).
The network address set in the master station 2 (station No.0) is automatically assigned.

3. The CC-Link IE Field Network gateway setting is not required for the Ethernet adapter module 2.
Because the network address of the request destination (Ethernet adapter module 1) is the same as that of the master station, setting only the communication path in the routing parameters allows communications to be performed with the request destination.

4. Write the set parameters to the Ethernet adapter module 2.

■Checking the status of communications

After the setting is completed in each module, execute the IP communication test using the configuration tool of the Ethernet adapter module. Then check for an error in the communication path between the Ethernet device (request source device) and Ethernet device (request destination device).

For the IP communication test using the configuration tool, refer to the following.

📖CC-Link IE Field Network Ethernet Adapter Module User's Manual

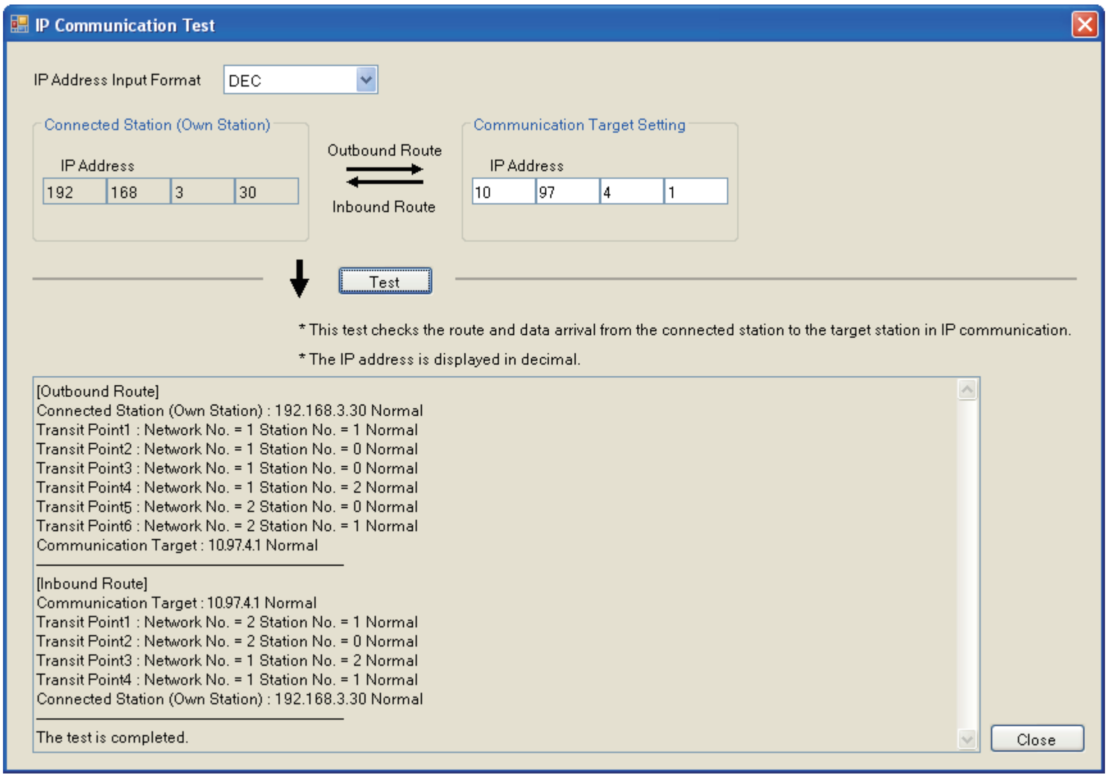

IP Address Input Format: DEC

Connected Station (Own Station) IP Address: 192 . 168 . 3 . 30

Communication Target Setting IP Address: 10 . 97 . 4 . 1

* This test checks the route and data arrival from the connected station to the target station in IP communication.

* The IP address is displayed in decimal.

```
[Outbound Route]
Connected Station (Own Station) : 192.168.3.30 Normal
Transit Point1 : Network No. = 1 Station No. = 1 Normal
Transit Point2 : Network No. = 1 Station No. = 0 Normal
Transit Point3 : Network No. = 1 Station No. = 0 Normal
Transit Point4 : Network No. = 1 Station No. = 2 Normal
Transit Point5 : Network No. = 2 Station No. = 0 Normal
Transit Point6 : Network No. = 2 Station No. = 1 Normal
Communication Target : 10.97.4.1 Normal
______________________________

[Inbound Route]
Communication Target : 10.97.4.1 Normal
Transit Point1 : Network No. = 2 Station No. = 1 Normal
Transit Point2 : Network No. = 2 Station No. = 0 Normal
Transit Point3 : Network No. = 1 Station No. = 2 Normal
Transit Point4 : Network No. = 1 Station No. = 1 Normal
Connected Station (Own Station) : 192.168.3.30 Normal
______________________________

The test is completed.
```

1.6 Safety Communication Function

This section describes the safety communication function.

Restriction

Following modules are required to use the safety communication function.

- Safety CPU
- Safety function module

The safety communication function cannot be used in a system containing a submaster station.

Communications with safety stations

This function establishes a safety connection and enables one-on-one safety communications periodically between safety stations in the same network.

The safety device of the Safety CPU is used for data communication.

Whether a safety connection is established or not can be checked in "Safety refresh communication status of each safety connection (1st module)" (SA\SD1008 to SA\SD1015) of the Safety CPU.[1]

[1] Safety special registers for the first Simple Motion module. For the safety special register for the second or later Simple Motion module, refer to the following.
MELSEC iQ-R CPU Module User's Manual (Application)

Stations supporting safety communications

Safety communications can be performed between the following stations (safety stations).

- Master station (safety station) (1) ↔ local station (safety station) (2)
- Master station (safety station) (1) ↔ remote device station (safety station) (3)

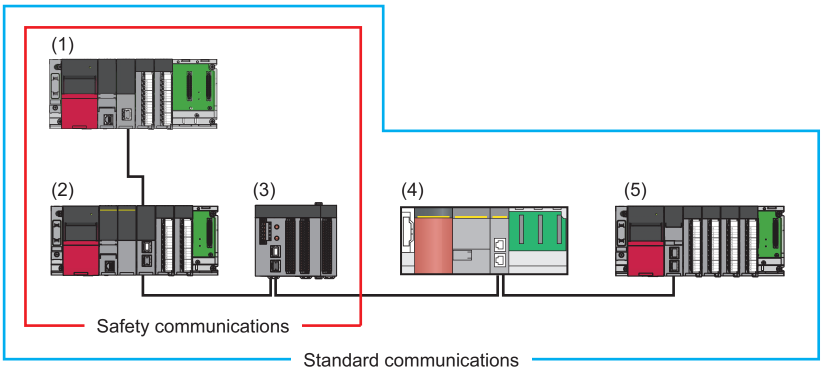

Point

Safety station and standard station (5) can be mixed in one network. However, safety communications cannot be performed with standard stations (5).

Restriction

Safety communications with safety stations of the MELSEC-QS series (4) cannot be performed.

Safety communications flow

■Master station (safety station) and local station (safety station)

The safety device status of the sending station is stored in a safety device of the receiving station.

Safety communications between local stations (safety stations) is also the same.

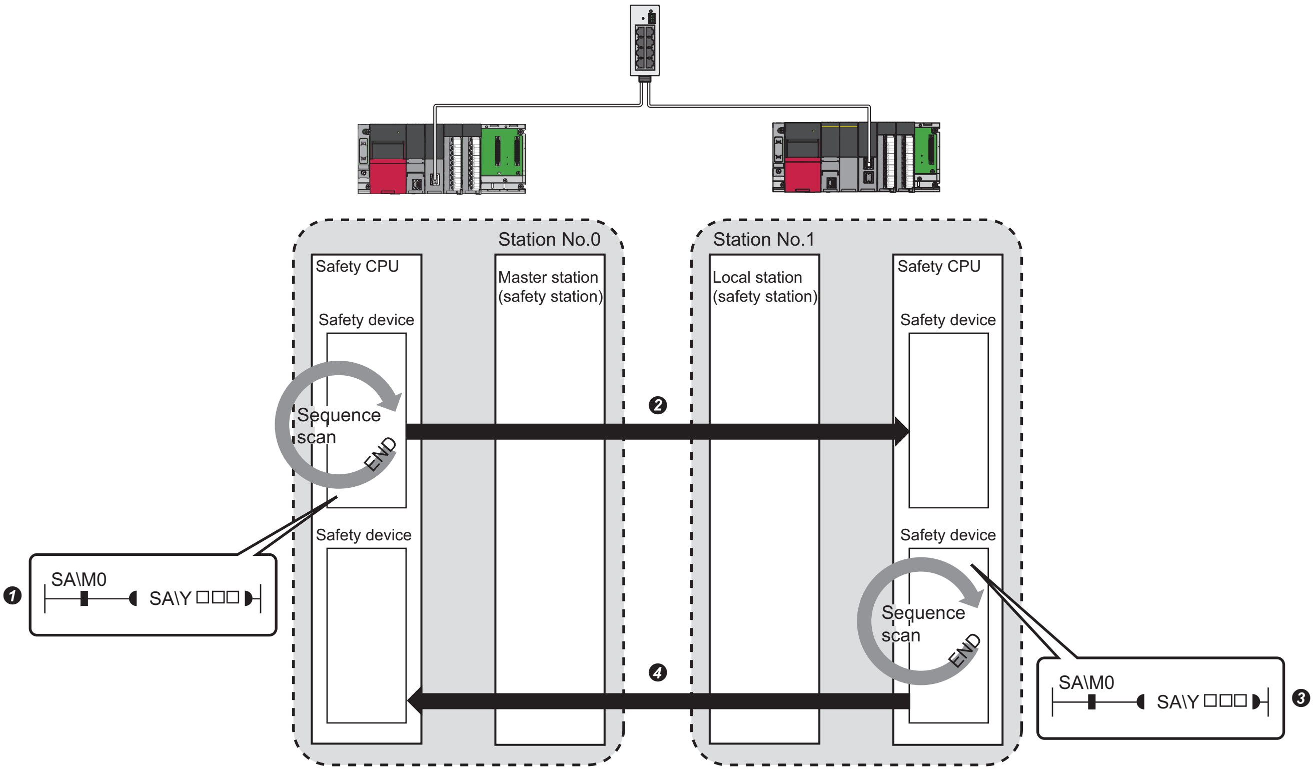
Station No.0
Safety CPU
Master station (safety station)
Safety device
Sequence scan
END
Safety device
SA\M0
SA\Y□□□
❶
❷
Station No.1
Local station (safety station)
Safety CPU
Safety device
Safety device
Sequence scan
END
SA\M0
SA\Y□□□
❸
❹

- Output from the master station (safety station)

❶ The safety device of the Safety CPU on the master station (safety station) turns on.

❷ The safety device status of the Safety CPU on the master station (safety station) is stored in the Safety CPU on the local station (safety station) by safety data transfer.

- Output from the local station (safety station)

❸ The safety device of the Safety CPU on the local station (safety station) turns on.

❹ The safety device status of the Safety CPU on the local station (safety station) is stored in the Safety CPU on the master station (safety station) by safety data transfer.

■Master station (safety station) and remote device station (safety station)

- The safety device status of the Safety CPU on the master station (safety station) is reflected to the safety output of the remote device station (safety station).
- The safety input status of the remote device station (safety station) is stored in the Safety CPU on the master station (safety station).

For communications with the remote device station (safety station), 16 points of RWw and 16 points of RWr are used by the system. Set "RWw/RWr Setting" to 16 points in "Network Configuration Settings" of "Basic Settings". (☞ Page 66 Network Configuration Settings)

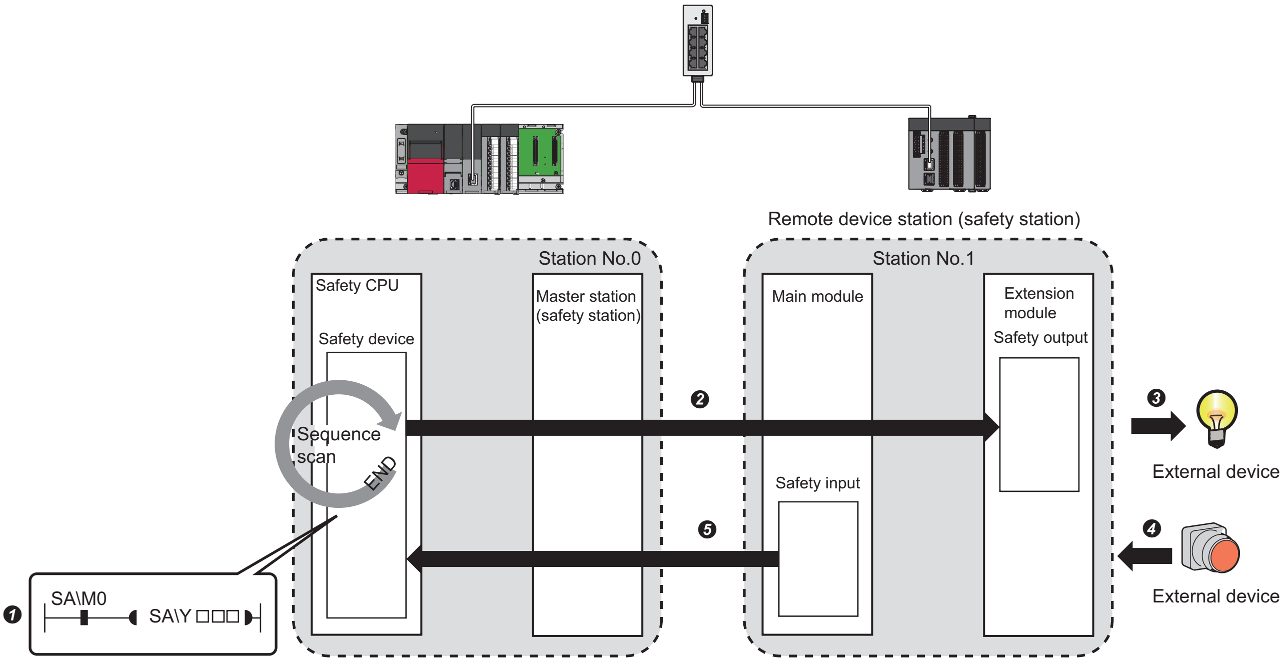

- Output from the master station (safety station)

❶ The safety device of the Safety CPU on the master station (safety station) turns on.
❷ The safety device status of the Safety CPU on the master station (safety station) is stored in the Safety CPU on the remote device station (safety station) by safety data transfer.
❸ The safety output status of the remote device station (safety station) is output to an external device.

- Input form the remote device station (safety station)

❹ The status of the external device is stored in the safety input of the remote device station (safety station).
❺ The safety device status of the Safety CPU on the remote device station (safety station) is stored in the Safety CPU on the master station (safety station) by safety data transfer.

Restriction

Do not write any data to the area (RWw and RWr) used by the system.
Doing so may cause malfunction of the programmable controller system.

■Setting method

Set safety communications in "Safety Communication Setting" under "Application Settings". (☞ Page 80 Safety Communication Setting)

How to count the number of safety connections

The maximum number of safety connections per network is 1814. If exceeding this limit, safety communications are not guaranteed. The number of safety connections can be calculated using the following formulas:

Number of safety connections = M + (L ÷ 2)

M: Number of all the safety connections set in the master station (safety station)

L: Number of all the safety connections set in the local station (safety station) that perform safety communications with local stations (safety stations)

Precautions

- This function may detect an error and stop safety communications if the data link is reconfigured during safety communications.
- If an error occurs in safety communications, safety data from the station with an error is cleared.
- A safety connection between the master station (safety station) and local station (safety station) or between local stations (safety stations) can be established only while baton bass is performed after configuring "Safety Communication Setting" under "Application Settings" of both stations (sending side and receiving side). The baton pass status can be checked in "Baton pass status of own station" (SB0047).
- A safety connection with the remote device station (safety station) can be established only while data link is performed after configuring the "Safety Communication Setting" under "Application Settings" of the master station. The data link status can be checked in "Data link status of each station" (SW00B0 to SW00B7).
- Note that stations not set in "Network Configuration Settings" under "Basic Settings" of the master station (safety station) and reserved stations cannot establish a safety connection.
- Safety communications cannot be performed among the Simple Motion modules set in the same control CPU.
- This function may detect an error and stop safety communications if a parameter is written to the control CPU of the Simple Motion module during safety communications.

Safety station interlock function

When a communication error has occurred between safety stations, communication is automatically cut to prevent incorrect input or output from the faulty station. Safety communications between the stations becomes safety station interlock state, and it does not resume until the safety interlock is released.

Create a program which releases the interlock by using Interlock release request for each safety connection to release the safety station interlock state.

Note that standard communication automatically resumes even in the safety station interlock state if the communication error cause is eliminated.

The safety station interlock function prevents equipment stopped by a communication error from suddenly resuming its operation after it recovers from the error.

Checking method

Check the status with the safety special register "Interlock status of each safety connection (1st module)" (SA\SD1232 to SA\SD1239).

For the safety special register for the second or later modules and its operation details, refer to the following.

📖MELSEC iQ-R CPU Module User's Manual (Application)

Release method

Release the interlock using the safety special register "Interlock release request for each safety connection (1st module)" (SA\SD1240 to SA\SD1247).

For the safety special register for the second or later modules and its operation details, refer to the following.

📖MELSEC iQ-R CPU Module User's Manual (Application)

2 PARAMETER SETTINGS

This chapter describes the parameter settings required for communications between the Simple Motion module and other stations.

2.1 Setting Parameters

1. Add the Simple Motion module in the engineering tool.

Navigation window ⇨ "Parameter" ⇨ "Module Information" ⇨ Right-click ⇨ [Add New Module]

2. The required settings, basic settings, and application settings are included in the parameter settings. Select one of the settings from the tree on the window shown below.

Navigation window ⇨ "Parameter" ⇨ "Module Information" ⇨ Target module ⇨ "Module Parameter (Network)"

3. After setting parameters, click the [Apply] button

4. Write the settings to the CPU module using the engineering tool.

[Online] ⇨ [Write to PLC]

5. The settings are reflected by resetting the CPU module or powering off and on the system.

2.2 Required Settings

Set the station type, network No., or other parameters for the Simple Motion module.

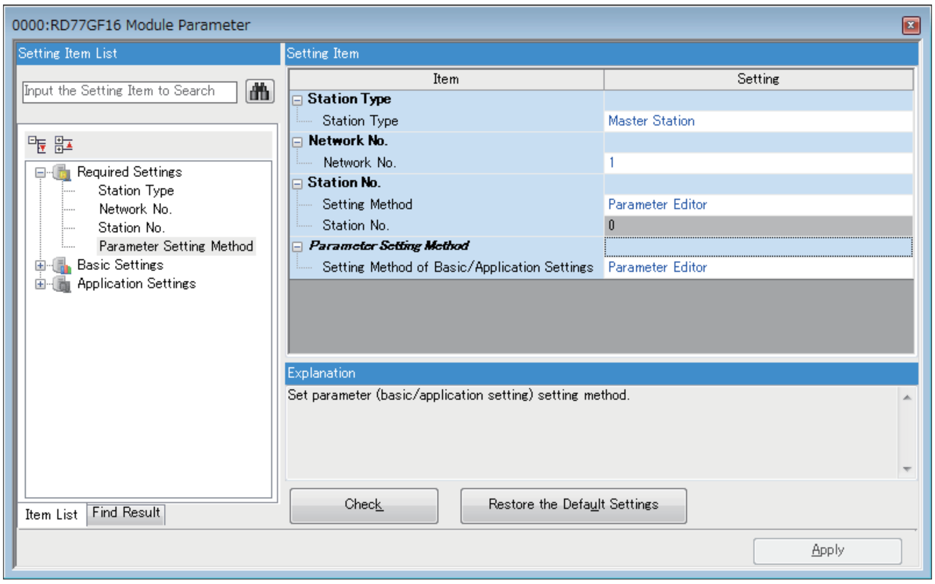
0000:RD77GF16 Module Parameter
Setting Item List
Input the Setting Item to Search
Required Settings
Station Type
Network No.
Station No.
Parameter Setting Method
Basic Settings
Application Settings
Item List
Find Result
Setting Item
Explanation
Check
Restore the Default Settings
Apply

Item	Setting
Station Type	
Station Type	Master Station
Network No.	
Network No.	1
Station No.	
Setting Method	Parameter Editor
Station No.	0
Parameter Setting Method	
Setting Method of Basic/Application Settings	Parameter Editor

Set parameter (basic/application setting) setting method.

Item	Description	Reference
Station Type	Set the station type of the Simple Motion module.	☞ Page 64 Station Type
Network No.	Set the network No. of the Simple Motion module.	☞ Page 64 Network No.
Station No.	Set the station No. of the Simple Motion module.	☞ Page 64 Station No.
Parameter Setting Method	Set "Basic Settings" and "Application Settings" items of the Simple Motion module in parameter editor.	☞ Page 64 Parameter Setting Method

Point

When the parameters of required settings are not set, the module operates as a master station of network No.1.

However, baton pass and data link are not performed.

Station Type

Set the station type of the Simple Motion module.

Item	Description	Setting range
Station Type	Use the Simple Motion module as a master station. One master station can be set in a network.	—

Network No.

Set the network No. of the Simple Motion module.

Item	Description	Setting range
Network No.	Set the network No. of the Simple Motion module.	1 to 239 (Default: 1)

Station No.

Set the station No. of the Simple Motion module.

Item	Description	Setting range
Setting Method	Set the station No. in parameter editor.	—
Station No.	The station No. of the master station is fixed to "0".	—

Parameter Setting Method

Set "Basic Settings" and "Application Settings" items of the Simple Motion module in parameter editor.

Item	Description	Setting range
Setting Method of Basic/ Application Settings	Set the parameter using the engineering tool. The following are advantages. • Parameters can be easily set in the window without creating a program for setting. • The data will be automatically transferred between the devices of the CPU module and the link special relay (SB), link special register (SW), and link devices of the Simple Motion module, or between the module label of the CPU module and the link special relay (SB) and link special register (SW) of the Simple Motion module.	—

2.3 Basic Settings

Set the network configurations, refresh settings, or other parameters for the Simple Motion module.

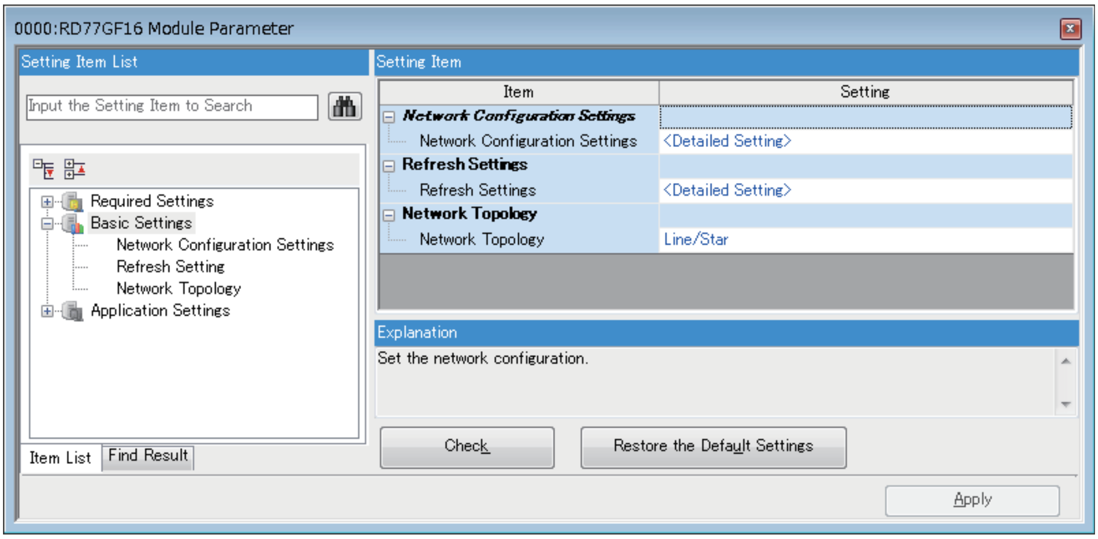

0000:RD77GF16 Module Parameter
Setting Item List
Input the Setting Item to Search
Setting Item
Explanation
Check
Restore the Default Settings
Apply
Item List
Find Result

- Required Settings
- Basic Settings
  - Network Configuration Settings
  - Refresh Setting
  - Network Topology
- Application Settings

Item	Setting
Network Configuration Settings	
Network Configuration Settings	<Detailed Setting>
Refresh Settings	
Refresh Settings	<Detailed Setting>
Network Topology	
Network Topology	Line/Star

Set the network configuration.

Item	Description	Reference
Network Configuration Settings	Set parameters of slave stations (the number of points and assignment of link devices) in the master station.	☞ Page 66 Network Configuration Settings
Refresh Settings	Set link refresh ranges between the devices of the CPU module and the link special relay (SB), link special register (SW), and link devices of the Simple Motion module, or between the module label of the CPU module and the link special relay (SB) and link special register (SW) of the Simple Motion module.	☞ Page 69 Refresh Settings
Network Topology	Select the topology type according to the actual network configuration.	☞ Page 72 Network Topology

Network Configuration Settings

Set parameters of slave stations (the number of points and assignment of link devices) in the master station.

Setting procedure

The procedure for the network configuration settings is shown below.

1. Select the module in "Module List" and drag it to the list of stations or the network map.

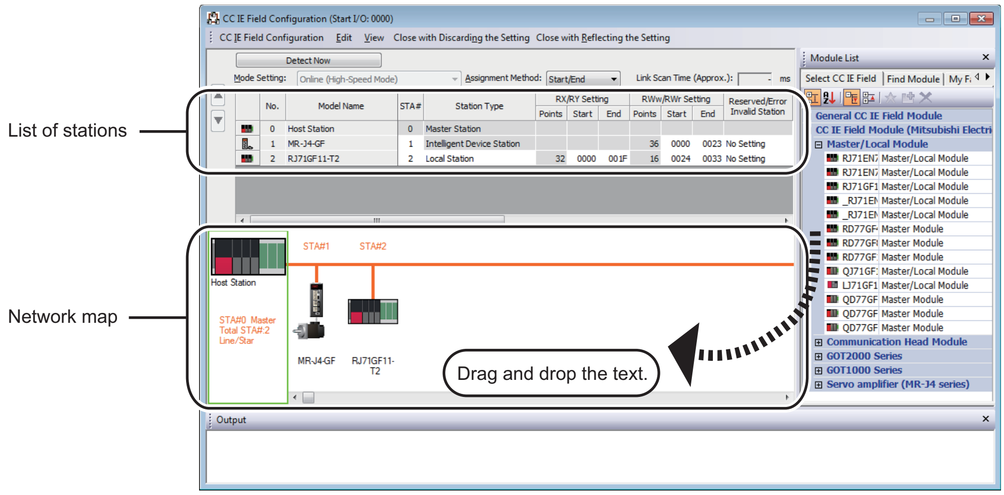

CC IE Field Configuration (Start I/O: 0000)

Mode Setting: Online (High-Speed Mode)

Assignment Method: Start/End

Link Scan Time (Approx.): - ms

No.	Model Name	STA#	Station Type	RX/RY Setting Points	RX/RY Setting Start	RX/RY Setting End	RWw/RWr Setting Points	RWw/RWr Setting Start	RWw/RWr Setting End	Reserved/Error Invalid Station
0	Host Station	0	Master Station							
1	MR-J4-GF	1	Intelligent Device Station				36	0000	0023	No Setting
2	RJ71GF11-T2	2	Local Station	32	0000	001F	16	0024	0033	No Setting

List of stations
Network map
CC IE Field Configuration
Edit
View
Close with Discarding the Setting
Close with Reflecting the Setting
Detect Now
Module List
Select CC IE Field
Find Module
My F
General CC IE Field Module
CC IE Field Module (Mitsubishi Electri
Master/Local Module
RJ71EN7 Master/Local Module
RJ71EN7 Master/Local Module
RJ71GF1 Master/Local Module
_RJ71EN Master/Local Module
_RJ71EN Master/Local Module
RD77GF Master Module
RD77GF Master Module
RD77GF Master Module
QJ71GF Master/Local Module
LJ71GF1 Master/Local Module
QD77GF Master Module
QD77GF Master Module
QD77GF Master Module
Communication Head Module
GOT2000 Series
GOT1000 Series
Servo amplifier (MR-J4 series)
Host Station
STA#0 Master
Total STA#:2
Line/Star
STA#1
STA#2
MR-J4-GF
RJ71GF11-T2
Drag and drop the text.
Output

2. Set the required items.

3. Select [Close with Reflecting the Setting] to finish the network configuration settings.

Point

When changing the network configuration settings after setting "Safety Communication Setting" under "Application Settings", correct the safety communication setting.

Setting items

Item	Description	Setting range
[Detect Now] button	Automatically reads the information of slave stations. For details, refer to the following. iQ Sensor Solution Reference Manual	—
Mode Setting	The mode of the master station is displayed.	—
Assignment Method	Select a link device assignment method. • Point/Start: Enter the points and start Nos. of link devices. • Start/End: Enter the start and end Nos. of link devices.	• Point/Start • Start/End (Default: Start/End)
Link Scan Time (Approx.)	The approximate link scan time is displayed.	—
No.	The total number of slave stations set in "Network Configuration Settings" is displayed.	—
Model Name	The module model name is displayed. To set a module where the profile is not registered, select it from the "General CC IE Field Module" list or register the profile before setting the model name. For how to register a profile, refer to the following. GX Works3 Operating Manual	—
STA#	Enter the station No. of each slave station connected to the network. Station Nos. do not need to be set consecutively, but must be unique. The station No. of the master station is fixed at "0".	1 to 120 (Default: Blank)
Station Type	Select the station type (excluding the master station). Select the station type same as that of the modules connected to the network.	• Remote I/O Station • Remote Device Station • Intelligent Device Station • Local Station (Default: Varies depending on the set module)

Item	Description	Setting range
RX/RY Setting	Assign RX/RY points. (☞ Page 17 Data flow and link device assignment) Points can be assigned in increments of 16 (Start: _ _ _0H, End: _ _ _FH). To equally assign points or the same points, go to [Equal Assignment] or [Identical Point Assignment] on the [CC IE Field Configuration] menu.	Points • Master Station, Local Station, Intelligent Device Station: 16 to 2048 • Remote Device Station: 16 to 128 • Remote I/O Station: 16 to 64 Device No. • 0H to 3FFFH (Default: Varies depending on the set module)
RWw/RWr Setting	Assign RWw/RWr points in increments of 4. (☞ Page 17 Data flow and link device assignment) To equally assign points or the same points, go to [Equal Assignment] or [Identical Point Assignment] on the [CC IE Field Configuration] menu.	Points • Master Station, Local Station, Intelligent Device Station: 4 to 1024 • Remote Device Station: 4 to 64 • Remote I/O Station: Cannot be set. Device No. • 0H to 1FFFH (Default: Varies depending on the set module)
Reserved/Error Invalid Station/System Switching Monitoring Target Station	Set this item to set the slave station as a reserved station, error invalid station, or system switching monitoring target station. • No Setting: The slave station is connected to the network. • Reserved Station: The slave station is reserved for future expansion. By reserving a slave station, link device assignment will not change even if the slave station is added or the reservation is canceled. Therefore, the program needs not to be modified. Physical connection of the slave station is not required. • Error Invalid Station: Even if a slave station is disconnected during data link, the master station will not detect the slave station as a faulty station. • System Switching Monitoring Target Station: This item cannot be set in the Simple Motion module.	• No Setting • Reserved Station • Error Invalid Station (Default: No Setting)
Pairing	This item cannot be set in the Simple Motion module.	—
Network Synchronous Communication	Select whether to synchronize the slave station using the CC-Link IE Field Network synchronous communication function.	• Asynchronous • Synchronous (Default: Asynchronous)
Alias	This item cannot be set in the Simple Motion module.	All settings are invalid.
Comment		
Station-specific mode setting	Set the station-specific mode of the slave station. This setting is available only when the slave station supports the station-specific mode.	The setting varies depending on the set module.
Module List	The slave stations are listed. Drag the modules from "Module List" to the list of stations or the network map to set the information of the slave stations into the master station.	—

■Parameter processing of a slave station

🖱 Select the module in the list of stations. ⇨ [CC IE Field Configuration] ⇨ [Online] ⇨ [Parameter Processing of Slave Station]

The parameters of a slave station can be set or read. This setting can be executed only when the slave station supports the parameter processing. The setting range varies depending on the target module. For details, refer to the manual for the slave station used.

■Command execution of a slave station

🖱 Select the module in the list of stations. ⇨ [CC IE Field Configuration] ⇨ [Online] ⇨ [Command Execution of Slave Station]

The command of a slave station is executed. This setting can be executed only when the slave station supports the command execution. The setting range varies depending on the target module. For details, refer to the manual for the slave station used.

■Equal assignment and identical point assignment of link points

Equal assignment and identical point assignment can be set as follows.

[CC IE Field Configuration] ⇨ [Equal Assignment] or [Identical Point Assignment]

Item	Description	Setting range
Equal Assignment	Specify the start station and end station, and equally assign link devices to stations. 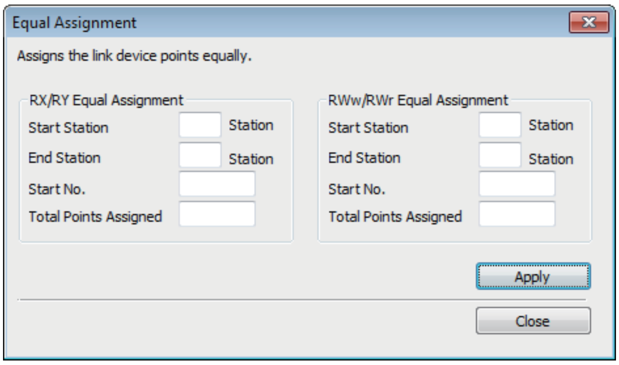 Assigns the link device points equally. Equal Assignment RX/RY Equal Assignment Start Station Station End Station Station Start No. Total Points Assigned RWw/RWr Equal Assignment Start Station Station End Station Station Start No. Total Points Assigned Apply Close • Start Station: Enter the start station No. of stations for which link devices are equally assigned. • End Station: Enter the end station No. of stations for which link devices are equally assigned. • Start No.: Enter the start No. of link devices to be equally assigned. • Total Points Assigned: Enter the total points of link devices to be equally assigned.	• Start Station: 0 to the end station No. • End Station: No. set to "Start Station" to the end station No. • Start No.: Same values set in "RX/RY Setting" and "RWw/RWr Setting" • Total Points Assigned: Same values set in "RX/RY Setting" and "RWw/RWr Setting" (Default: Blank)
Identical Point Assignment	Assign the same link device points to all stations. 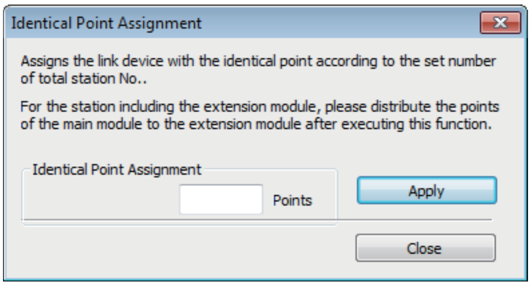 Assigns the link device with the identical point according to the set number of total station No.. For the station including the extension module, please distribute the points of the main module to the extension module after executing this function. Identical Point Assignment Identical Point Assignment Points Apply Close • Points entered in this field will be reflected to the "Points" of "RX/RY Setting". • Half of the points entered in this field will be reflected to the "Points" of "RWw/RWr Setting".	—

Refresh Settings

Set link refresh ranges between the devices of the CPU module and the link special relay (SB), link special register (SW), and link devices of the Simple Motion module, or between the module label of the CPU module and the link special relay (SB) and link special register (SW) of the Simple Motion module.

Setting procedure

The procedure for the refresh settings is shown below.

1. Set the required items.

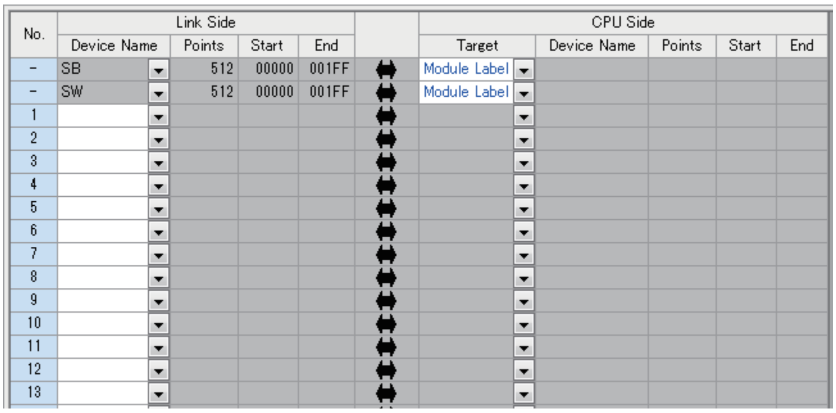

No.	Link Side					CPU Side				
	Device Name	Points	Start	End		Target	Device Name	Points	Start	End
-	SB	512	00000	001FF	⇔	Module Label				
-	SW	512	00000	001FF	⇔	Module Label				
1					⇔					
2					⇔					
3					⇔					
4					⇔					
5					⇔					
6					⇔					
7					⇔					
8					⇔					
9					⇔					
10					⇔					
11					⇔					
12					⇔					
13					⇔					

2. Click the [Apply] button to finish the refresh settings.

Setting items

Item		Description	Setting range
Device Assignment Method		Right-click in the setting window and select a link device assignment method from the "Device Assignment Method" menu. • Start/End: Enter the start and end Nos. of link devices. • Points/Start: Enter the points and start Nos. of link devices.	• Start/End • Points/Start (Default: Start/End)
—	Link Side	Set the link refresh ranges of SB and SW. One range can be set for each SB and SW. (☞ Page 20 Link refresh) **Ex.** 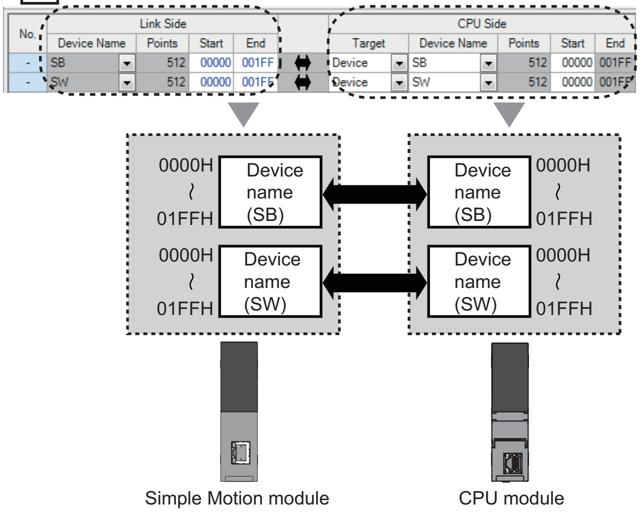 No. | Link Side: Device Name, Points, Start, End | CPU Side: Target, Device Name, Points, Start, End - | SB, 512, 00000, 001FF ⇔ Device, SB, 512, 00000, 001FF - | SW, 512, 00000, 001FF ⇔ Device, SW, 512, 00000, 001FF 0000H ~ 01FFH Device name (SB) 0000H ~ 01FFH Device name (SW) Device name (SB) 0000H ~ 01FFH Device name (SW) 0000H ~ 01FFH Simple Motion module CPU module	Device Name • SB (fixed) • SW (fixed) Points • SB (fixed): 16 to 512 • SW (fixed): 1 to 512 (Default: 512) Start • SB (fixed): 0H to 1F0H (set in increments of 16 points) • SW (fixed): 0H to 1FFH (set in increments of 1 point) (Default: 0H) End • SB (fixed): FH to 1FFH (set in increments of 16 points) • SW (fixed): 0H to 1FFH (set in increments of 1 point) (Default: 1FFH)
	CPU Side		Target • Module Label • Specify Device (Default: Module Label) Device Name • Module label: — • Specify Device (when link side is SB): SB, M, L, B, D, R, ZR, RD • Specify Device (when link side is SW): SW, M, L, B, D, R, ZR, RD (Default: Blank) Points, Start, End • Range of the device in the CPU module • Set bit devices in increments of 16 points and word devices in increments of 4 points. (Default: Blank)

<table>
<tr><th colspan="2">Item</th><th>Description</th><th>Setting range</th></tr>
<tr><td rowspan="2">1 to 256</td><td>Link Side</td><td rowspan="2">Set the link refresh ranges of RX, RY, RWr, and RWw. Up to 256 ranges can be set. (☞ Page 20 Link refresh)
Ex.
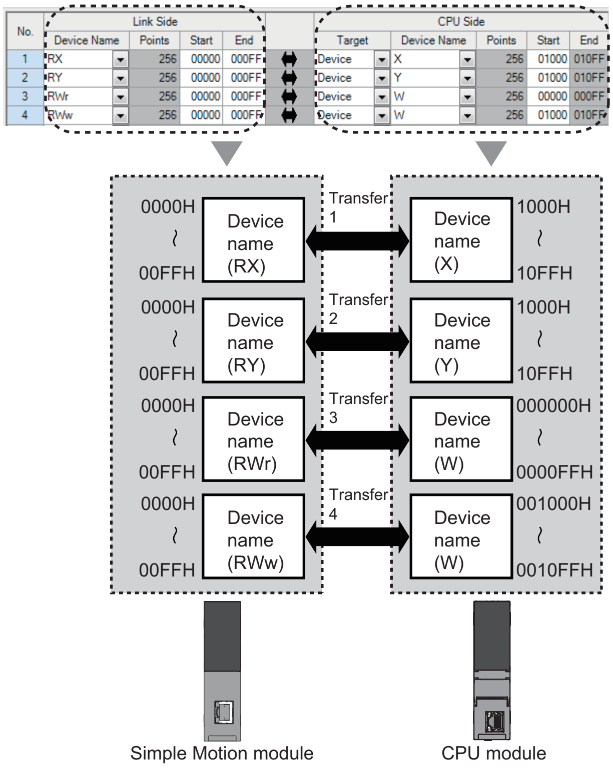
<table><tr><th rowspan="2">No.</th><th colspan="4">Link Side</th><th rowspan="2"></th><th colspan="5">CPU Side</th></tr><tr><th>Device Name</th><th>Points</th><th>Start</th><th>End</th><th>Target</th><th>Device Name</th><th>Points</th><th>Start</th><th>End</th></tr><tr><td>1</td><td>RX</td><td>256</td><td>00000</td><td>000FF</td><td>⇔</td><td>Device</td><td>X</td><td>256</td><td>01000</td><td>010FF</td></tr><tr><td>2</td><td>RY</td><td>256</td><td>00000</td><td>000FF</td><td>⇔</td><td>Device</td><td>Y</td><td>256</td><td>01000</td><td>010FF</td></tr><tr><td>3</td><td>RWr</td><td>256</td><td>00000</td><td>000FF</td><td>⇔</td><td>Device</td><td>W</td><td>256</td><td>00000</td><td>000FF</td></tr><tr><td>4</td><td>RWw</td><td>256</td><td>00000</td><td>000FF</td><td>⇔</td><td>Device</td><td>W</td><td>256</td><td>01000</td><td>010FF</td></tr></table>

0000H
00FFH
Device name (RX)
Transfer 1
Device name (X)
1000H
10FFH
0000H
00FFH
Device name (RY)
Transfer 2
Device name (Y)
1000H
10FFH
0000H
00FFH
Device name (RWr)
Transfer 3
Device name (W)
000000H
0000FFH
0000H
00FFH
Device name (RWw)
Transfer 4
Device name (W)
001000H
0010FFH
Simple Motion module
CPU module

</td><td>Device Name
• RX, RY, RWr, RWw
(Default: Blank)
Points
• RX, RY: 16 to 16384
• RWr, RWw: 4 to 8192
(Default: Blank)
Start
• RX, RY: 0H to 3FF0H (set in increments of 16 points)
• RWr, RWw: 0 to 1FFCH (set in increments of 4 points)
(Default: Blank)
End
• RX, RY: 0H to 3FFFH (set in increments of 16 points)
• RWr, RWw: 0 to 1FFFH (set in increments of 4 points)
(Default: Blank)</td></tr>
<tr><td>CPU Side</td><td>Target
• Specify Device
(Default: Blank)
Device Name
• Specify Device (when link side is RX): X, M, L, B, D, W, R, ZR, RD
• Specify Device (when link side is RY): Y, M, L, B, D, W, R, ZR, RD
• Specify Device (when link side is RWr): M, L, B, D, W, R, ZR, RD
• Specify Device (when link side is RWw): M, L, B, D, W, R, ZR, RD
(Default: Blank)
Points, Start, End
• Range of the device in the CPU module
• Set bit devices in increments of 16 points and word devices in increments of 4 points.
(Default: Blank)</td></tr>
</table>

Point

The link devices of the Simple Motion module can be accessed from a program. (☞ Page 22 Direct access to link devices)

Precautions

■Device set to "CPU Side"

Set a device range not to overlap the one used for the following:

- "Refresh Settings" in "Basic Settings" of other network modules
- "Link Refresh Settings" in "Basic Settings" of a CC-Link master/local module
- I/O Nos. used for I/O modules and intelligent function modules
- "Refresh settings" of intelligent function modules
- "Refresh Setting between Multiple CPUs" of "CPU Parameter" for a multiple CPU system

■Link refresh range

- Set only link devices used in the CPU module for link refresh range. Doing so will reduce link refresh points, resulting in a shorter link refresh time.
- Do not include RWw of the servo amplifier (motion mode) in the link refresh range. The error "Network refresh setting error" (error code: 3065H) occurs and the READY signal [X0] is not turned ON.
- When the inter-module synchronization setting is set to "Not Use", the link device (RX/RY/RWr/RWw) of the station whose network synchronous communication is set to "Synchronous" is not refreshed.

Restriction

When the software version of the Simple Motion module is "Ver.05":
When the control CPU is a safety CPU, the refresh setting of RWw of the servo amplifier (motion mode) is not checked.
Do not include RWw of the servo amplifier (motion mode) in the refresh range. If it is included, the operation will be failure such as that the servo ON is not executed.

■Changing link device assignment in "Network Configuration Settings" of "Basic Settings"

Correct the set range in "Refresh Settings" of "Basic Settings".

Network Topology

Select the topology type according to the actual network configuration.

Item	Description	Setting range
Network Topology	The topology type is fixed to "Line/Star".	—

2.4 Application Settings

Set the supplementary cyclic settings, IP address, or other parameters for the Simple Motion module.

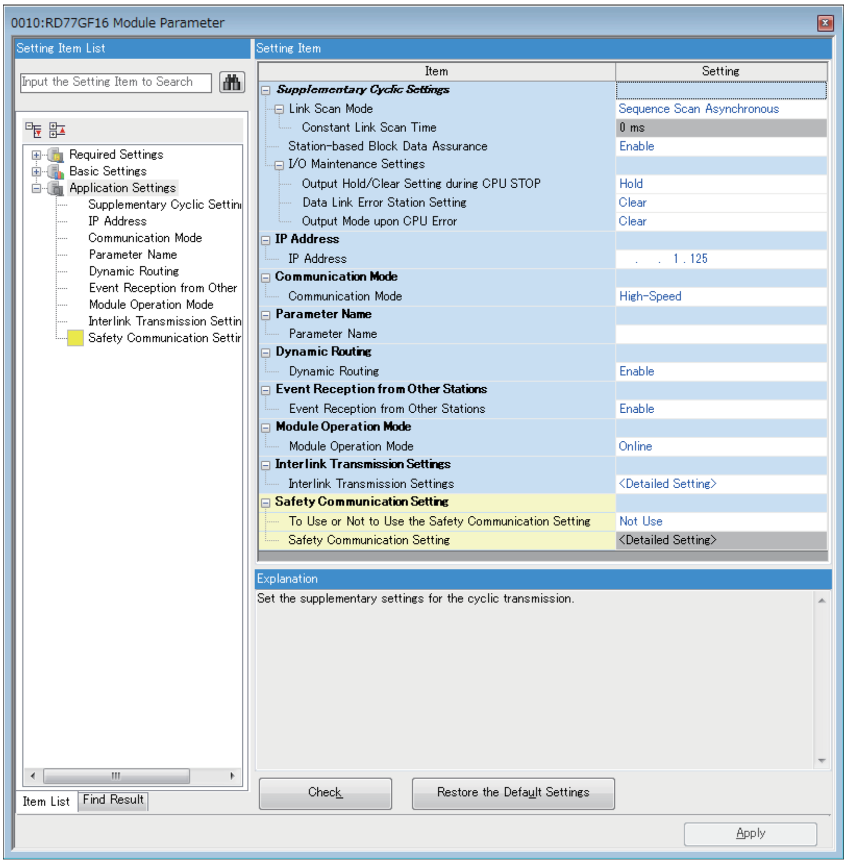

0010:RD77GF16 Module Parameter
Setting Item List
Input the Setting Item to Search
Required Settings
Basic Settings
Application Settings
Supplementary Cyclic Settin
IP Address
Communication Mode
Parameter Name
Dynamic Routing
Event Reception from Other
Module Operation Mode
Interlink Transmission Settin
Safety Communication Settir
Item List
Find Result
Setting Item
Explanation
Check
Restore the Default Settings
Apply

Item	Setting
Supplementary Cyclic Settings	
Link Scan Mode	Sequence Scan Asynchronous
Constant Link Scan Time	0 ms
Station-based Block Data Assurance	Enable
I/O Maintenance Settings	
Output Hold/Clear Setting during CPU STOP	Hold
Data Link Error Station Setting	Clear
Output Mode upon CPU Error	Clear
IP Address	
IP Address	. . 1 . 125
Communication Mode	
Communication Mode	High-Speed
Parameter Name	
Parameter Name	
Dynamic Routing	
Dynamic Routing	Enable
Event Reception from Other Stations	
Event Reception from Other Stations	Enable
Module Operation Mode	
Module Operation Mode	Online
Interlink Transmission Settings	
Interlink Transmission Settings	<Detailed Setting>
Safety Communication Setting	
To Use or Not to Use the Safety Communication Setting	Not Use
Safety Communication Setting	<Detailed Setting>

Set the supplementary settings for the cyclic transmission.

Item	Description	Reference
Supplementary Cyclic Settings	Set the link scan mode, station-based block data assurance, and I/O maintenance setting.	☞ Page 74 Supplementary Cyclic Settings
IP Address	Set the IP address of the master station to communicate with Ethernet device over CC-Link IE Field Network.	☞ Page 74 IP Address
Communication Mode	Set the communication mode of the own station.	☞ Page 75 Communication Mode
Parameter Name	Set a name for the module parameter if desired.	☞ Page 75 Parameter Name
Dynamic Routing	Select whether to enable the dynamic routing function.	☞ Page 75 Dynamic Routing
Event Reception from Other Stations	Select whether to obtain the events occurring in the other stations.	☞ Page 75 Event Reception from Other Stations
Module Operation Mode	Set the mode of the Simple Motion module.	☞ Page 76 Module Operation Mode
Interlink Transmission Settings	Set link device ranges when cyclic data are transferred from a station in the own network to a station in another network.	☞ Page 76 Interlink Transmission Settings
Safety Communication Setting	Set whether to use the safety communication function or not and set the safety connections and transfer ranges of safety devices. This item can be set only in a project of the Safety CPU.	☞ Page 80 Safety Communication Setting

Supplementary Cyclic Settings

Set the link scan mode, station-based block data assurance, and I/O maintenance setting.

Item		Description	Setting range
Link Scan Mode		The link scan mode is shown below. ■Sequence Scan Asynchronous Link scan is performed asynchronously with the sequence scan of the CPU module. Set this item to shorten input transmission delay time when sequence scan takes much more time than link scan. Note that output transmission delay time will become longer.	—
Station-based Block Data Assurance*1		Select whether to ensure a data integrity of the data blocks being refreshed between the Simple Motion module and the CPU module. (☞ Page 25 Cyclic data integrity assurance) When the inter-module synchronization setting is set to "Not Use", this setting is ignored by the station whose network synchronous communication setting is set to "Synchronous" and the station operates as "Disable". Assure data using interlock programs as required.	• Enable • Disable (Default: Enable)
I/O Maintenance Settings	Output Hold/Clear Setting during CPU STOP	Select whether cyclic data output is held or cleared when the CPU module mounted with the Simple Motion module is set to STOP state. (☞ Page 33 Output status setting for CPU STOP)	• Hold • Clear (Default: Hold)
	Data Link Error Station Setting*2	Select whether to hold or clear data input from the slave station where a data link error has occurred. (☞ Page 32 Input and output status settings when failure occurs)	• Clear • Hold (Default: Clear)
	Output Mode upon CPU Error*3	Select whether to hold or clear data output from the Simple Motion module when the CPU module is in stop error. (☞ Page 32 Input and output status settings when failure occurs)	• Clear • Hold (Default: Clear)

*1 When the software version of the Simple Motion module is "Ver.01":
The set parameter is ignored in the Simple Motion module and operate as "Disable". Assure data using interlock programs as required.
When the software version of the Simple Motion module is "Ver.02" or later:
To enable data assurance in an asynchronous station, read/write data by direct access in the inter-module synchronous interrupt program (I44) without using a link refresh.

*2 When the software version of the Simple Motion module is "Ver.01":
The set parameter is ignored in the Simple Motion module and operate as "Hold". Add "Data link status of each station" (SW00B0 to SW00B7) to an interlock of the program as required.

*3 Set "Clear" in the Simple Motion module. If "Hold" is set, the error "Hold error" (error code: 1930H) occurs at power-on and the operation is not performed.

IP Address

Set the IP address of the master station to communicate with Ethernet device over CC-Link IE Field Network. (☞ Page 42 Rules for the IP address setting)

Item	Description	Setting range
IP Address	Only the network address part (first and second octets) of the IP address needs to be set. The network No. part (third octet) and the station No. part (fourth octet) are automatically set. • Set an IP address for the master station only. • Use the same network address for the request source device, request destination device, and modules among them. • Since automatically assigned, an IP address needs not to be set for local stations. (The network address same as that of the master station is automatically set.)	First octet: 0 to 223 Second octet: 0 to 255

Communication Mode

Set the communication mode of the own station. Select the communication mode from "Normal" or "High-Speed".

Item	Description	Setting range
Communication Mode	Normal • Cyclic and transient transmission are performed without losing their inherent speed performance. This mode is suitable for a system that transmits large amount of data for management, monitoring, and diagnostics by transient transmission along with I/O control or analog control. (☞ Page 176 Differences in Cyclic Transmission Modes) High-Speed • Cyclic transmission has a priority over transient transmission. This mode is suitable for applications requiring lower cycle times such as I/O control, analog control, and digital I/O. (☞ Page 176 Differences in Cyclic Transmission Modes)	• Normal • High-Speed (Default: High-Speed)

Restriction

- In "High-Speed" mode, the maximum number of points assigned to RWw/RWr is 256 points per local station.
- In "High-Speed" mode, the priority of transient transmission is lower and its processing speed is slower than in "Normal" mode.

Parameter Name

Set a name for the module parameter if desired.

Item	Description	Setting range
Parameter Name	Set a name for the module parameter if desired.	Up to 8 one-byte or two-byte characters (Default: Blank)

Dynamic Routing

Select whether to enable the dynamic routing function.

Item	Description	Setting range
Dynamic Routing	When communicating with different networks, select whether to enable the dynamic routing function.	• Enable • Disable (Default: Enable)

For details, refer to the following.

☞ Page 36 Communications with different networks

Event Reception from Other Stations

Select whether to obtain the events occurring in the other stations.

Item	Description	Setting range
Event Reception from Other Stations	Select whether to obtain the events occurring in the other stations.	• Enable • Disable (Default: Enable)

Module Operation Mode

Set the mode of the Simple Motion module.

Item	Description	Setting range
Module Operation Mode	Online • Select this mode to connect the Simple Motion module to the network for performing data link with other stations. Offline • Select this mode to disconnect the Simple Motion module from the network for stopping data link with other stations.	• Online • Offline (Default: Online)

Restriction

The following functions are disabled when "Module Operation Mode" is set to "Offline". (☞ Page 16 FUNCTIONS)

- Cyclic transmission
- Transient transmission
- RAS (slave station disconnection, automatic return)
- CC-Link IE Field Network synchronous communication function
- IP packet transfer function
- Safety communication function

Interlink Transmission Settings

Set link device ranges when cyclic data are transferred from a station in the own network to a station in another network.

Setting procedure

The procedure for the interlink transmission settings is shown below.

1. Select combination of modules in the "Transfer Source Module" and "Transfer Destination Module" boxes and enter setting values.

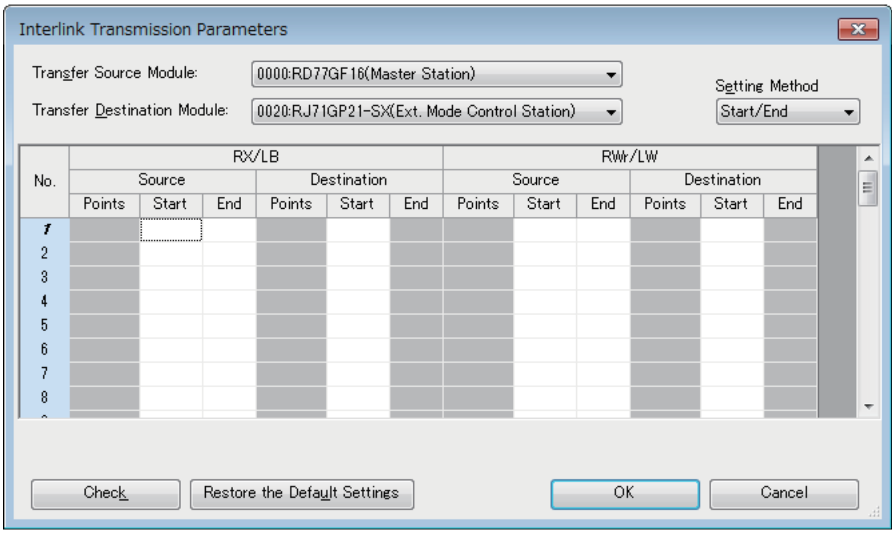

Interlink Transmission Parameters

Transfer Source Module: 0000:RD77GF16(Master Station)

Transfer Destination Module: 0020:RJ71GP21-SX(Ext. Mode Control Station)

Setting Method: Start/End

No.	RX/LB						RWr/LW					
	Source			Destination			Source			Destination		
	Points	Start	End	Points	Start	End	Points	Start	End	Points	Start	End
1												
2												
3												
4												
5												
6												
7												
8												

2. Click the [OK] button to finish the interlink transmission settings.

Item		Description	Setting range
Setting Method		Right-click in the "Interlink Transmission Parameters" window and select a link device setting method from the "Setting Method" menu. • Start/End: Enter the start and end Nos. of link devices. • Points/Start: Enter the points and start Nos. of link devices.	• Start/End • Points/Start (Default: Start/End)
Transfer Source Module		Select the combination of transfer source and target modules.	The setting varies depending on the set module.
Transfer Destination Module			
RX/LB LB/RY	Source	Enter the link device range of the transfer source and destination modules. Up to 64 ranges can be set. RX and RY points can be assigned in increments of 16 (Start: _ _ _0H, End: _ _ _FH). When the transfer source is a Simple Motion module 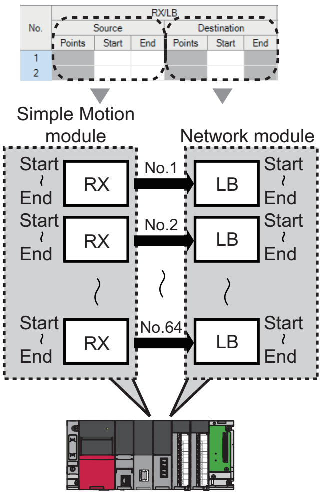 RX/LB No. Source Destination Points Start End 1 2 Simple Motion module Network module Start End RX LB No.1 No.2 No.64 When the transfer target is a Simple Motion module 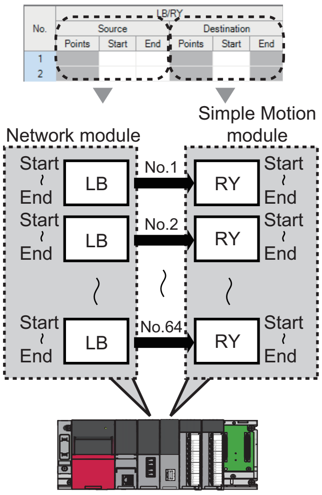 LB/RY No. Source Destination Points Start End 1 2 Network module Simple Motion module Start End LB RY No.1 No.2 No.64	RX: 0H to 3FFFH RY: 0H to 3FFFH (Default: Blank)
	Destination		
RWr/LW LW/RWw	Source	Enter the link device range of the transfer source and destination modules. Up to 64 ranges can be set. RWr and RWw points can be assigned in increments of 4. When the transfer source is a Simple Motion module 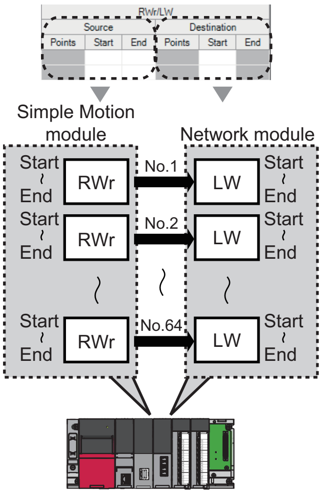 RWr/LW Source Destination Points Start End Simple Motion module Network module Start End RWr LW No.1 No.2 No.64 When the transfer target is a Simple Motion module 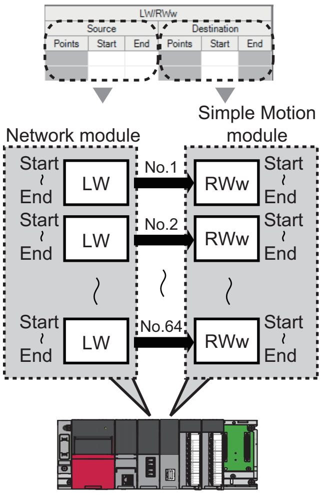 LW/RWw Source Destination Points Start End Network module Simple Motion module Start End LW RWw No.1 No.2 No.64	RWr: 0H to 1FFFH RWw: 0H to 1FFFH (Default: Blank)
	Destination		

Point

Link devices set for "Source" can be overlapped. Doing so will allow transfer of the same link devices to multiple network modules.

Precautions

■Stations supporting interlink transmission

Interlink transmission parameters can be set for the master station.

■Modules supporting interlink transmission

The master station can perform interlink transmission with the following modules.

- CC-Link IE Controller Network-equipped module (control station, normal station)

■Transfer destination link device setting

- Do not use link devices set for link refresh range as a transfer target. If doing so, transfer target link devices will be overwritten by link refresh. To use transfer target link device data in the CPU module, set the transfer source link device as the link refresh range.

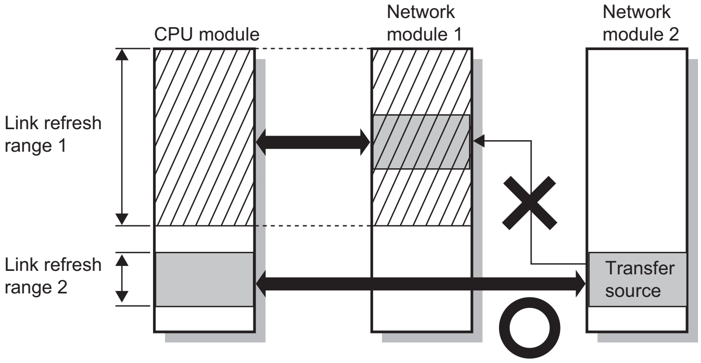
CPU module
Network module 1
Network module 2
Link refresh range 1
Link refresh range 2
Transfer source
✕
○

- Do not include RWw of the servo amplifier (motion mode) controlled by the Simple Motion module in the transfer destination. The error "Network refresh setting error" (error code: 3065H) occurs at power-on and the READY signal [X0] is not turned ON.

Restriction

When the software version of the Simple Motion module is "Ver.05":

When the control CPU is a safety CPU, the refresh setting of RWw of the servo amplifier (motion mode) is not checked.

Do not include RWw of the servo amplifier (motion mode) in the refresh range. If it is included, the operation will be failure such as that the servo ON is not executed.

■Setting 65 or more interlink transmission ranges

Use link direct devices in a program to perform interlink transmission.

Ex.

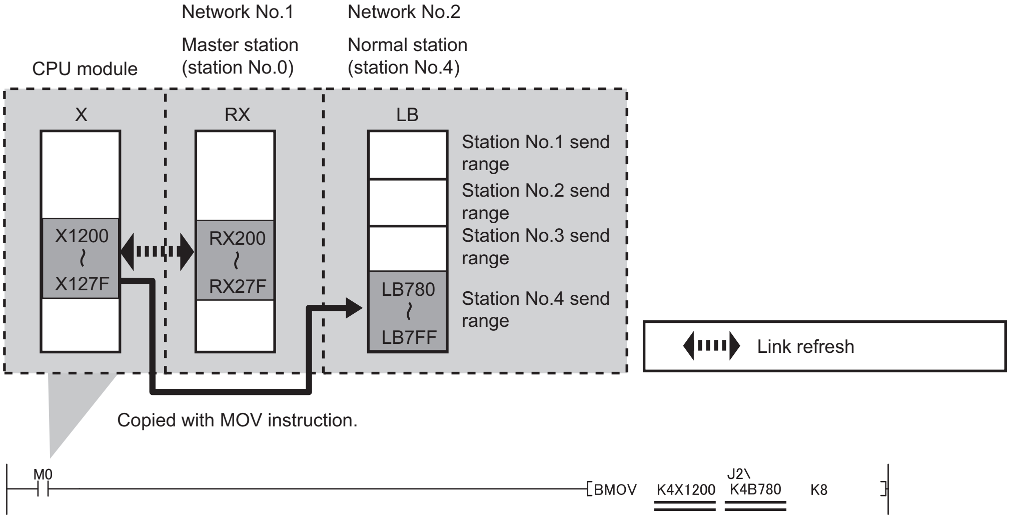
Network No.1
Network No.2
CPU module
Master station (station No.0)
Normal station (station No.4)
X
RX
LB
X1200 ≀ X127F
RX200 ≀ RX27F
LB780 ≀ LB7FF
Station No.1 send range
Station No.2 send range
Station No.3 send range
Station No.4 send range
Link refresh
Copied with MOV instruction.
M0
BMOV K4X1200 J2\K4B780 K8

Link direct device cannot be specified for both the first and second arguments. Specify CPU device by link refresh for either one.

■Performing interlink transmission in a multiple CPU system

When different control CPUs are set for the network modules, interlink transmission cannot be performed using interlink transmission parameters or a program. Perform interlink transmission using data communication by the CPU buffer memory. (📖MELSEC iQ-R CPU Module User's Manual (Application))

Setting example

The following is a setting example to perform interlink transmission from the master station on CC-Link IE Field Network to stations on CC-Link IE Controller Network. In this example, 128-point data input from the slave station (station No.1) is transferred.

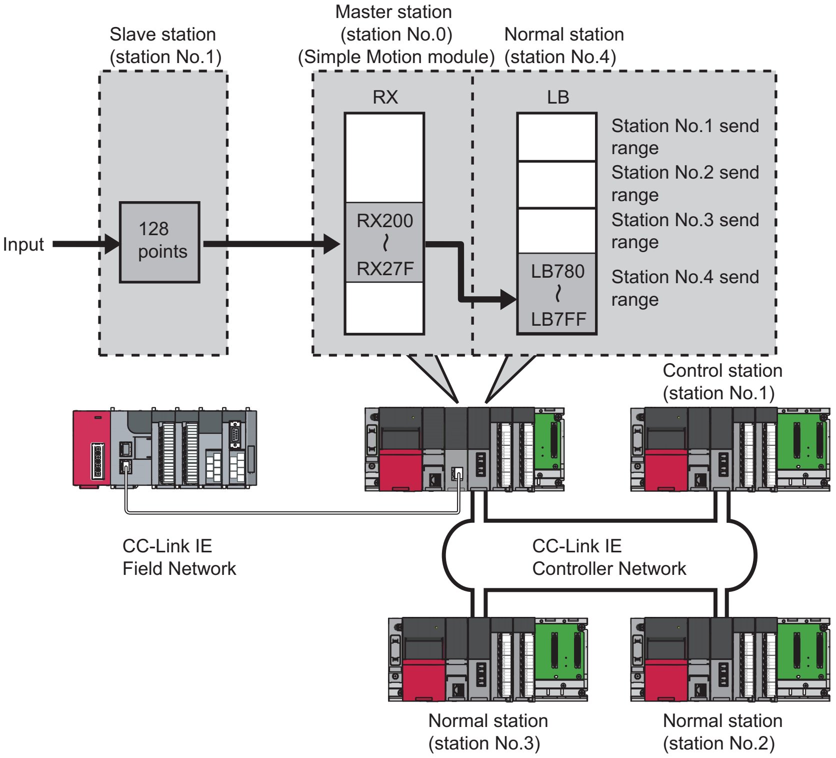
Slave station
(station No.1)
Master station
(station No.0)
(Simple Motion module)
Normal station
(station No.4)
RX
LB
Station No.1 send range
Station No.2 send range
Station No.3 send range
Station No.4 send range
Input
128 points
RX200 ≀ RX27F
LB780 ≀ LB7FF
Control station
(station No.1)
CC-Link IE
Field Network
CC-Link IE
Controller Network
Normal station
(station No.3)
Normal station
(station No.2)

1. Select "0000: RD77GF16 (Master Station)" for "Transfer Source Module" and "0020: RJ71GP21-SX (Normal Station)" for "Transfer Destination Module", and enter the transfer ranges of link devices.

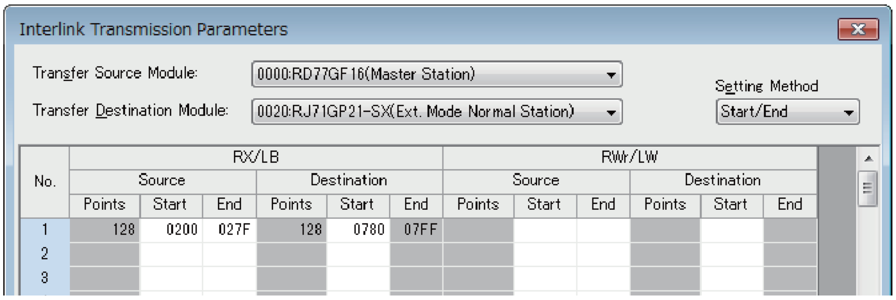

Interlink Transmission Parameters

Transfer Source Module: 0000:RD77GF16(Master Station)

Transfer Destination Module: 0020:RJ71GP21-SX(Ext. Mode Normal Station)

Setting Method: Start/End

No.	RX/LB						RWr/LW					
	Source			Destination			Source			Destination		
	Points	Start	End	Points	Start	End	Points	Start	End	Points	Start	End
1	128	0200	027F	128	0780	07FF						
2												
3												

2. Click the [OK] button.

Point

If the transfer target network module is on a network other than CC-Link IE Field Network, set the transfer target link devices within the own station send range of the network module. If the link devices are set within the send range of another station, the transferred data are overwritten with the send data of another station.

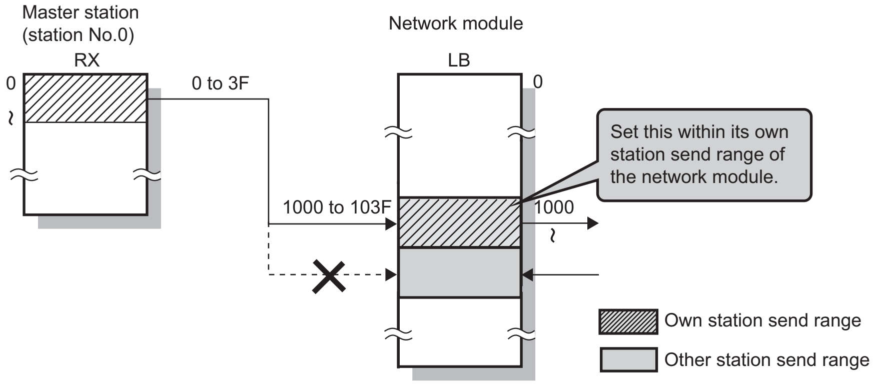
Master station
(station No.0)
RX
0
0 to 3F
Network module
LB
0
1000 to 103F
1000
Set this within its own station send range of the network module.
Own station send range
Other station send range

Safety Communication Setting

Set whether to use the safety communication function or not and set safety connections.

Item	Description	Setting range
To Use or Not to Use the Safety Communication Setting	Set whether to use the safety communication function or not.	• Use • Not Use (Default: Not Use)
Safety Communication Setting	Set the safety connections and transfer ranges of safety devices required for safety communications.	☞ Page 81 Setting items

Restriction

Set the following items before configuring the safety communication setting.

- "Network Configuration Settings" in "Basic Settings" (☞ Page 66 Network Configuration Settings)
- "Parameter Processing of Slave Station" in "Network Configuration Settings" under "Basic Settings" (📖 User's manual for the slave station used)

If the above items are not set, the slave station is not displayed as the target module in "Select the target module for the Safety Communication Setting" window and safety communications cannot be set.

Setting procedure

The procedure for the safety communication setting is shown below.

1. Set "Communication Destination" to "Local Network".

2. For the master station, select the target module of safety communications in "Select the target module for the Safety Communication Setting" window and click the [Add] button.

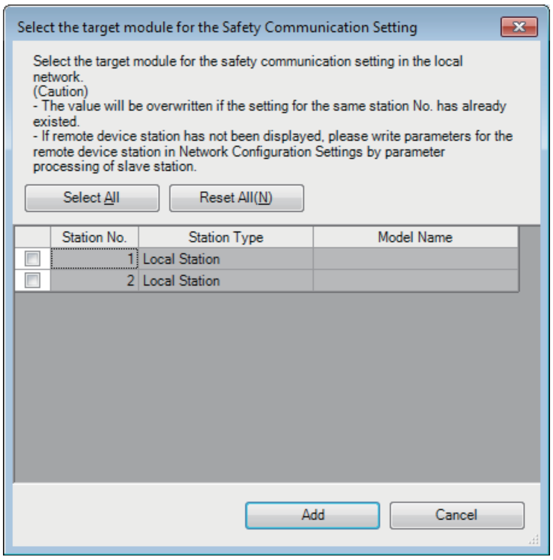

Select the target module for the Safety Communication Setting

Select the target module for the safety communication setting in the local network.
(Caution)
- The value will be overwritten if the setting for the same station No. has already existed.
- If remote device station has not been displayed, please write parameters for the remote device station in Network Configuration Settings by parameter processing of slave station.

	Station No.	Station Type	Model Name
☐	1	Local Station	
☐	2	Local Station	

3. Set the required items.

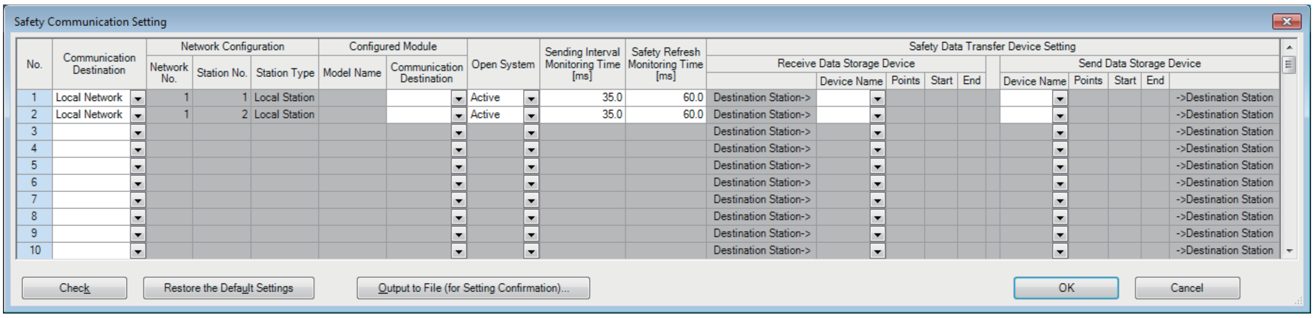

Safety Communication Setting

No.	Communication Destination	Network Configuration			Configured Module		Open System	Sending Interval Monitoring Time [ms]	Safety Refresh Monitoring Time [ms]	Safety Data Transfer Device Setting										
										Receive Data Storage Device						Send Data Storage Device				
		Network No.	Station No.	Station Type	Model Name	Communication Destination					Device Name	Points	Start	End		Device Name	Points	Start	End	
1	Local Network	1	1	Local Station			Active	35.0	60.0	Destination Station->										->Destination Station
2	Local Network	1	2	Local Station			Active	35.0	60.0	Destination Station->										->Destination Station
3										Destination Station->										->Destination Station
4										Destination Station->										->Destination Station
5										Destination Station->										->Destination Station
6										Destination Station->										->Destination Station
7										Destination Station->										->Destination Station
8										Destination Station->										->Destination Station
9										Destination Station->										->Destination Station
10										Destination Station->										->Destination Station

Check
Restore the Default Settings
Output to File (for Setting Confirmation)...
OK
Cancel

4. Click the [OK] button to finish the safety communication setting.

Setting items

Item		Description	Setting range
Setting Method		Right-click in the "Safety Communication Setting" window and select an assignment method in "Safety Data Transfer Device Setting". • Start/End: Enter the start and end Nos. of safety devices. • Points/Start: Enter the points and start Nos. of safety devices.	• Start/End • Points/Start (Default: Start/End)
No.		Safety connection No. for distinguishing settings for each safety connection.	1 to 120[*1]
Communication Destination		Set a network of the communication destination.	Local Network (Default: Blank)
Network Configuration	Network No.	Displays the local network No.	—
	Station No.	When the own station is the master station: The station No. of communication destination selected in "Select the target module for the Safety Communication Setting" window is displayed.	—
	Station Type	When the own station is the master station, the station type of the communication destination selected in "Select the target module for the Safety Communication Setting" window is displayed.	—

Item		Description	Setting range
Configured Module	Model Name	When the own station is the master station, the module model name of the communication destination selected in "Select the target module for the Safety Communication Setting" window is displayed. (Only slave station other than the local station)	—
	Communication Destination	In the following cases, set the Safety CPU model name of the communication destination. • When the own station is a master station: When the communication destination is a local station and the open system of the own station is Active	• R08SFCPU • R16SFCPU • R32SFCPU • R120SFCPU (Default: Blank)
Open System		Set the open system of the own station. • Active: Safety connections are established from the own station. • Passive: Safety connections are established from the communication destination.	• Active • Passive (Default: Blank)
Sending Interval Monitoring Time [ms]		In each safety connection, set sending interval monitoring time for a receiving station to detect safety communication errors.	3.0 to 1000.0 (Default: Blank)
Safety Refresh Monitoring Time [ms]		In each safety connection, set safety refresh monitoring time for a receiving station to detect safety communication errors. Set this item for the Active side of the safety stations that perform safety communications.	4.0 to 2000.0 (Default: Blank)
Safety Data Transfer Device Setting	Receive Data Storage Device	Set a safety device of the Safety CPU where safety data are stored.	Device Name • SA\X • SA\M • SA\B • SA\D • SA\W (Default: Blank) Points • Bit device: 16 to 128 (set in increments of 16 points) • Word device: 1 to 8 (set in increments of 1 point) (Default: Blank) Start/End Range of a safety device in the Safety CPU (Default: Blank)
	Send Data Storage Device	Set a safety device of the Safety CPU where safety data are sent.	Device Name • SA\Y • SA\M • SA\B • SA\D • SA\W (Default: Blank) Points • Bit device: 16 to 128 (set in increments of 16 points) • Word device: 1 to 8 (set in increments of 1 point) (Default: Blank) Start/End Range of a safety device in the Safety CPU (Default: Blank)
[Output to File (for Setting Confirmation)] button		Outputs the contents of the safety communication setting to a CSV file. The file is used to check whether there is no discrepancy between the safety communication setting written to the Safety CPU and that of the project. (📖GX Works3 Operating Manual)	—

[1] Set the safety connection No. starting with 1.
Even if the safety connection is set in a random line, the unset line is deleted and the No. is set starting with 1 when the [OK] button is clicked.

3 PROGRAMMING

This chapter describes programming and startup examples of CC-Link IE Field Network.

3.1 Precautions for Programming

This section describes precautions to create CC-Link IE Field Network programs.

Cyclic transmission program

For a cyclic transmission program, configure an interlock with the following module labels.

- "Data link error status of own station" (SB0049)
- "Data link status of each station" (SW00B0 to SW00B7)

Point

- For a program using safety communication function, configure an interlock with the safety special register. (☞ Page 85 Program using safety communication function)

Program example

Interlock example

Classification	Label name	Description	Device
Module label	RD77GF_1.stGF11.bSts_DataLinkError	Data link error status of own station	SB0049
	RD77GF_1.stGF11.bnSts_DataLinkError_Station[1]	Data link status of each station (station No.1)	SW00B0.0
	RD77GF_1.stGF11.bnSts_DataLinkError_Station[2]	Data link status of each station (station No.2)	SW00B0.1

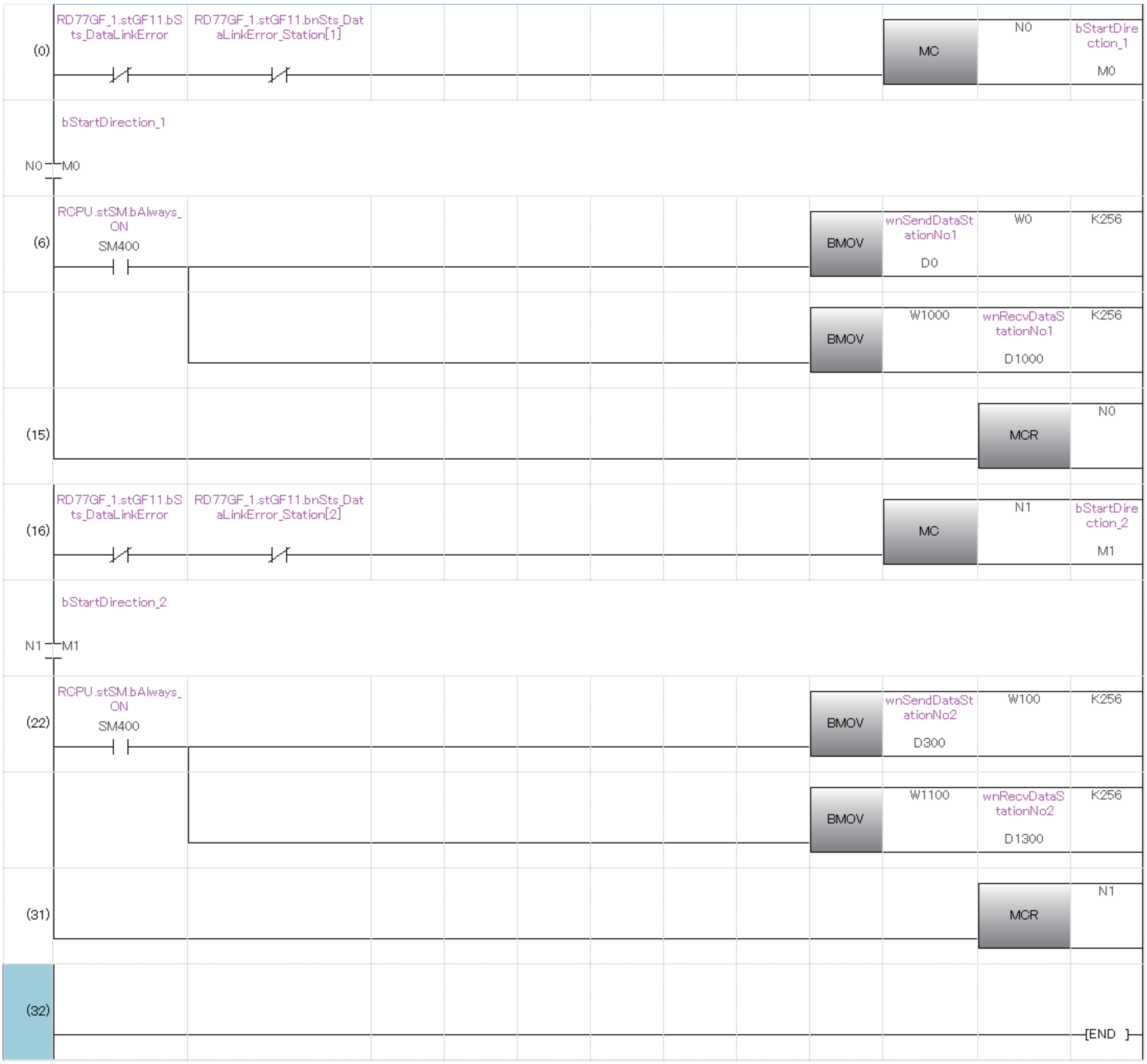
(0)
RD77GF_1.stGF11.bSts_DataLinkError
RD77GF_1.stGF11.bnSts_DataLinkError_Station[1]
MC
N0
bStartDirection_1
M0
N0
bStartDirection_1
M0
(6)
RCPU.stSM.bAlways_ON
SM400
BMOV
wnSendDataStationNo1
D0
W0
K256
BMOV
W1000
wnRecvDataStationNo1
D1000
K256
(15)
MCR
N0
(16)
RD77GF_1.stGF11.bSts_DataLinkError
RD77GF_1.stGF11.bnSts_DataLinkError_Station[2]
MC
N1
bStartDirection_2
M1
N1
bStartDirection_2
M1
(22)
RCPU.stSM.bAlways_ON
SM400
BMOV
wnSendDataStationNo2
D300
W100
K256
BMOV
W1100
wnRecvDataStationNo2
D1300
K256
(31)
MCR
N1
(32)
[END]

(6) Communication program with station No.1

(22) Communication program with station No.2

Transient transmission program

For a transient transmission program, configure an interlock with the following module labels.

- "Baton pass status of own station" (SB0047)
- "Baton pass status of each station" (SW00A0 to SW00A7)

Program example

Interlock example

Classification	Label name	Description	Device
Module label	RD77GF_1.stGF11.bSts_BatonPassError	Baton pass status of own station	SB0047
	RD77GF_1.stGF11.bnSts_BatonPassError_Station[1]	Baton pass status of each station (station No.1)	SW00A0.0

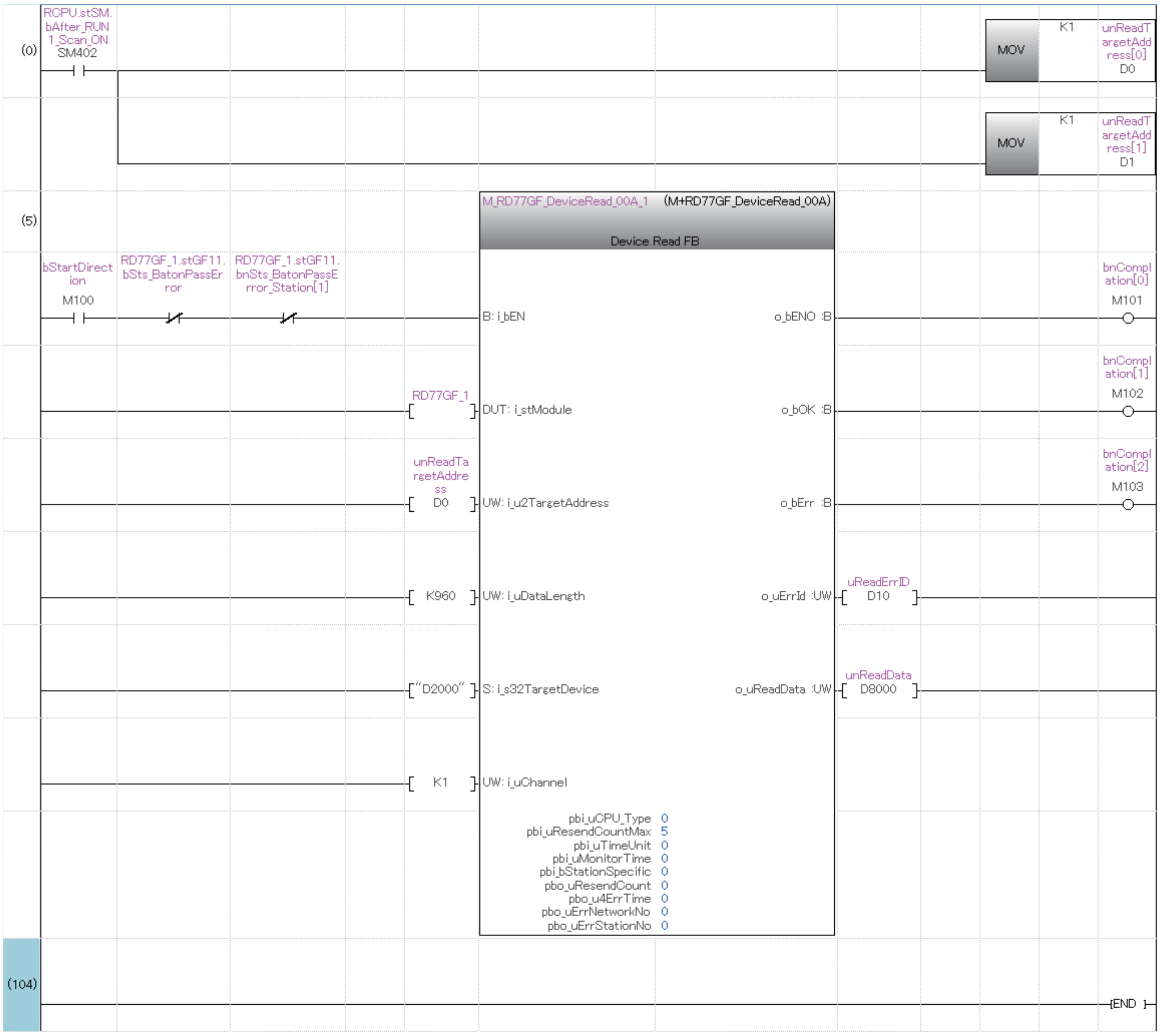

(0)
RCPU.stSM.bAfter_RUN1_Scan_ON
SM402
MOV
K1
unReadTargetAddress[0]
D0
MOV
K1
unReadTargetAddress[1]
D1
(5)
M_RD77GF_DeviceRead_00A_1
(M+RD77GF_DeviceRead_00A)
Device Read FB
bStartDirection
M100
RD77GF_1.stGF11.bSts_BatonPassError
RD77GF_1.stGF11.bnSts_BatonPassError_Station[1]
B: i_bEN
o_bENO :B
bnComplation[0]
M101
RD77GF_1
DUT: i_stModule
o_bOK :B
bnComplation[1]
M102
unReadTargetAddress
D0
UW: i_u2TargetAddress
o_bErr :B
bnComplation[2]
M103
K960
UW: i_uDataLength
o_uErrId :UW
uReadErrID
D10
"D2000"
S: i_s32TargetDevice
o_uReadData :UW
unReadData
D8000
K1
UW: i_uChannel
pbi_uCPU_Type 0
pbi_uResendCountMax 5
pbi_uTimeUnit 0
pbi_uMonitorTime 0
pbi_bStationSpecific 0
pbo_uResendCount 0
pbo_u4ErrTime 0
pbo_uErrNetworkNo 0
pbo_uErrStationNo 0
(104)
END

(5) Module FB for the station No.1

Program using safety communication function

For a program using safety communication function, configure an interlock with the safety special register described below. (For the 1st master/local module)

- "Safety refresh communication status of each safety connection (1st module)" (SA\SD1008 to SA\SD1015)

For a communication example using the safety communication function, refer to the following.

(☞ Page 86 Communication Example of Safety Communication Function)

3.2 Communication Example of Safety Communication Function

This section describes the communication example of the system using the Safety CPU.

System configuration example

The following system configuration is used to explain communications using the Safety CPU.

System configuration

- Power supply module: R61P
- Safety CPU: R08SFCPU
- Safety function module: R6SFM
- Simple Motion module: RD77GF16
- Input module: RX10
- Output module: RY10R2
- Remote I/O module with safety functions (main module): NZ2GFSS2-32D
- Remote I/O module with safety functions (extension module): NZ2EXSS2-8TE

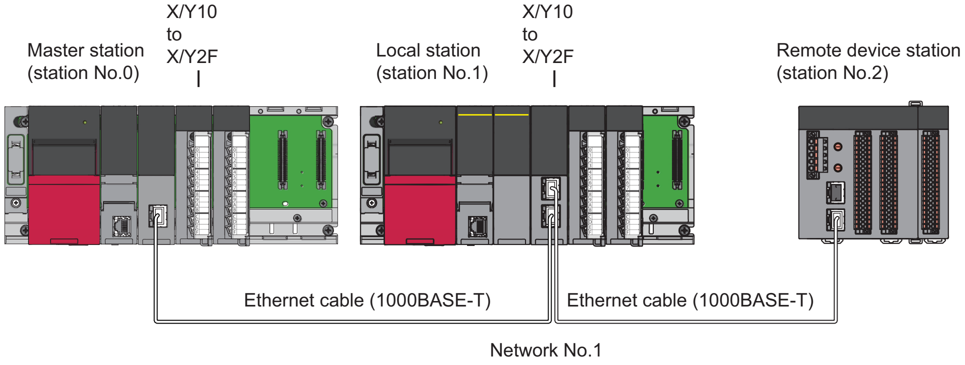
Master station
(station No.0)
X/Y10
to
X/Y2F
Local station
(station No.1)
X/Y10
to
X/Y2F
Remote device station
(station No.2)
Ethernet cable (1000BASE-T)
Ethernet cable (1000BASE-T)
Network No.1

In this program example, I/O devices are connected to X0, X1 (double input) and Y0, Y1 (double output) of the remote device station.

Safety device assignment

The following figure shows safety device assignment to be set in "Safety Communication Setting" under "Application Settings".

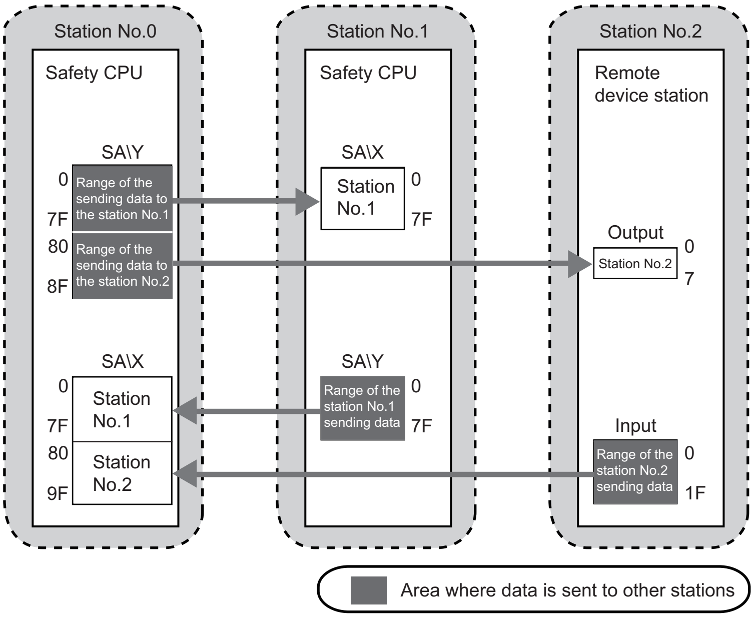
Station No.0
Safety CPU
SA\Y
0
Range of the sending data to the station No.1
7F
80
Range of the sending data to the station No.2
8F
SA\X
0
Station No.1
7F
80
Station No.2
9F
Station No.1
Safety CPU
SA\X
Station No.1
0
7F
SA\Y
Range of the station No.1 sending data
0
7F
Station No.2
Remote device station
Output
Station No.2
0
7
Input
Range of the station No.2 sending data
0
1F
Area where data is sent to other stations

Setting in the master station and remote device station

Connect the engineering tool to the Safety CPU of the master station and set parameters.

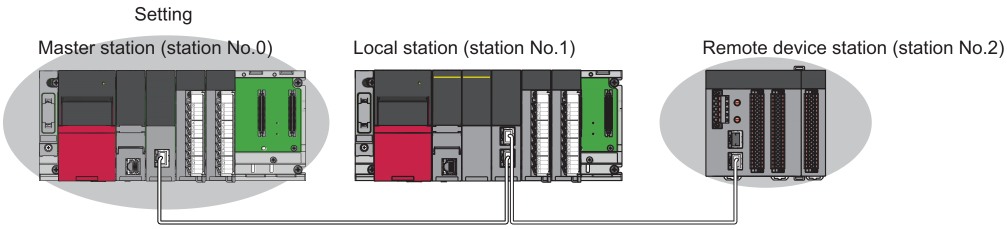
Setting
Master station (station No.0)
Local station (station No.1)
Remote device station (station No.2)

1. Set the Safety CPU as follows.

[Project] ⇨ [New]

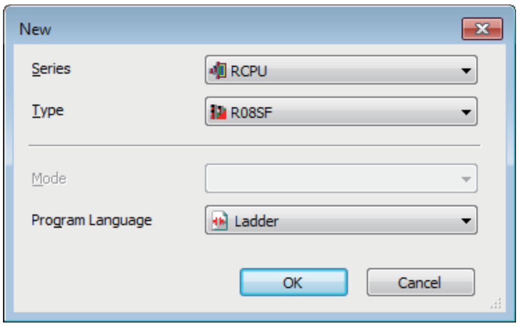
New
OK
Cancel

Series: RCPU

Type: R08SF

Mode:

Program Language: Ladder

2. In the following window, enter a password and re-enter password, and click the [OK] button.

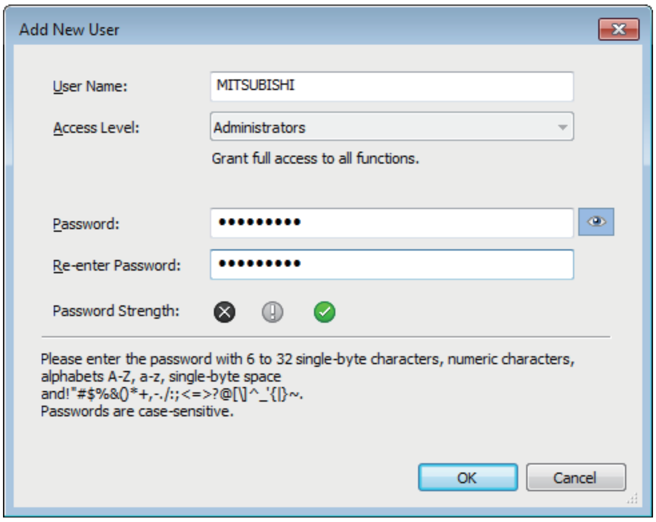
Add New User
OK
Cancel

User Name: MITSUBISHI

Access Level: Administrators

Grant full access to all functions.

Password: •••••••••

Re-enter Password: •••••••••

Password Strength: ⊗ ⓘ ✓

Please enter the password with 6 to 32 single-byte characters, numeric characters, alphabets A-Z, a-z, single-byte space and!"#$%&()*+,-./:;<=>?@[\]^_`{|}~.
Passwords are case-sensitive.

3. In the following window, enter a file name, and click the [Save] button.

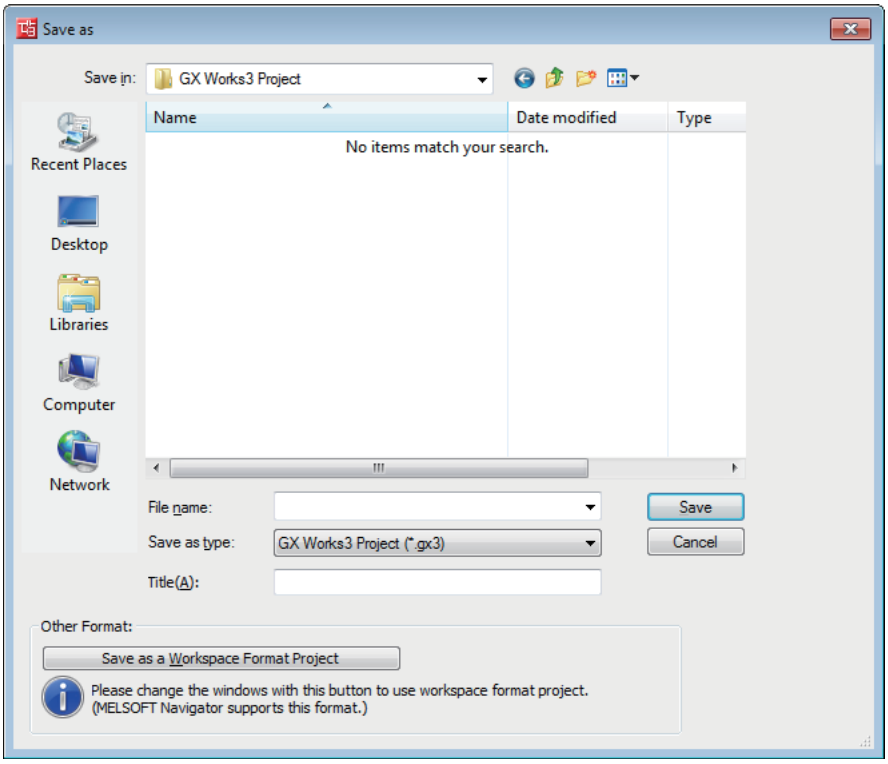
Save as
Recent Places
Desktop
Libraries
Computer
Network
Name
Date modified
Type
File name:
Title(A):
Other Format:
Save as a Workspace Format Project
Save
Cancel

Save in: GX Works3 Project

No items match your search.

Save as type: GX Works3 Project (*.gx3)

Please change the windows with this button to use workspace format project.
(MELSOFT Navigator supports this format.)

4. Click the [OK] button to add a module label of the Safety CPU.

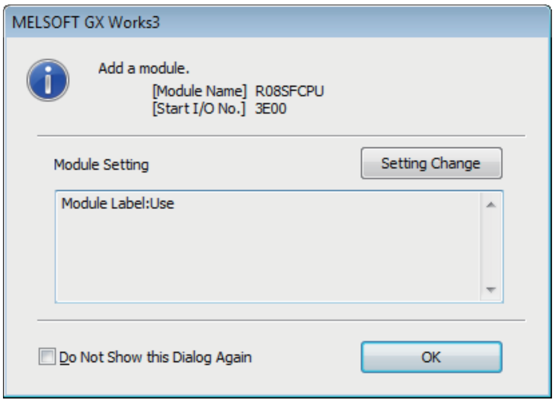
MELSOFT GX Works3
Module Setting
Setting Change
☐ Do Not Show this Dialog Again
OK

Add a module.
[Module Name] R08SFCPU
[Start I/O No.] 3E00

Module Label:Use

5. Add the safety program in the following item.

Navigation window ⇨ "Program" ⇨ "Fixed Scan" ⇨ Right-click ⇨ [Add New Data]

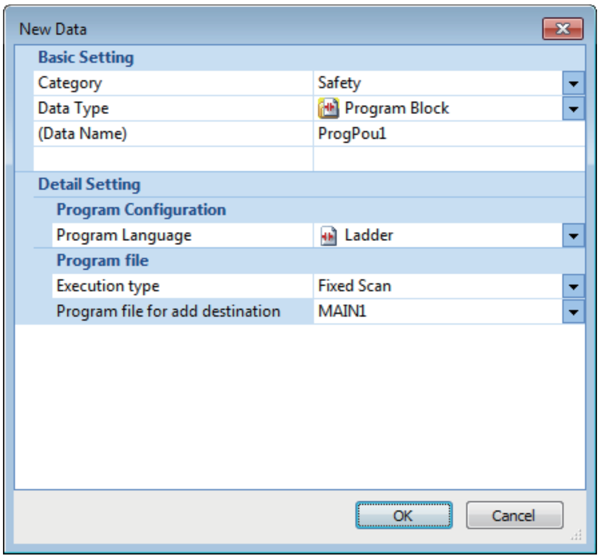
New Data
OK
Cancel

Basic Setting	
Category	Safety
Data Type	Program Block
(Data Name)	ProgPou1
Detail Setting	
Program Configuration	
Program Language	Ladder
Program file	
Execution type	Fixed Scan
Program file for add destination	MAIN1

6. Add the safety global label in the following item.

Navigation window ⇨ "Label" ⇨ "Global Label" ⇨ Right-click ⇨ [Add New Data]

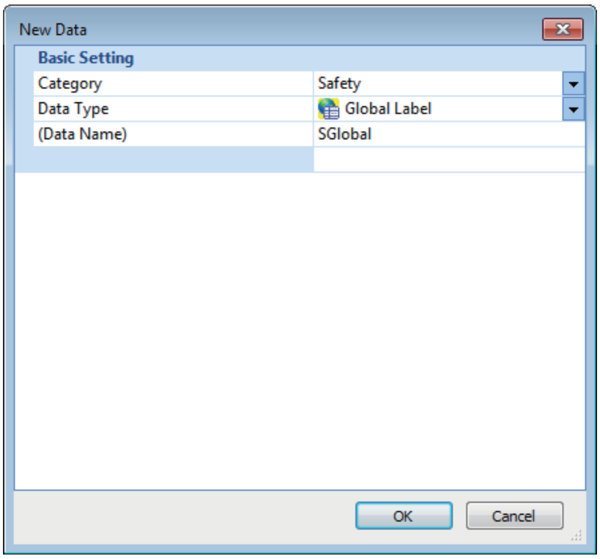

Basic Setting	
Category	Safety
Data Type	Global Label
(Data Name)	SGlobal

7. In the I/O assignment setting, set the safety function module for slot No.0.

Navigation window ⇨ "Parameter" ⇨ "System Parameter" ⇨ [I/O Assignment] tab ⇨ "I/O Assignment Setting"

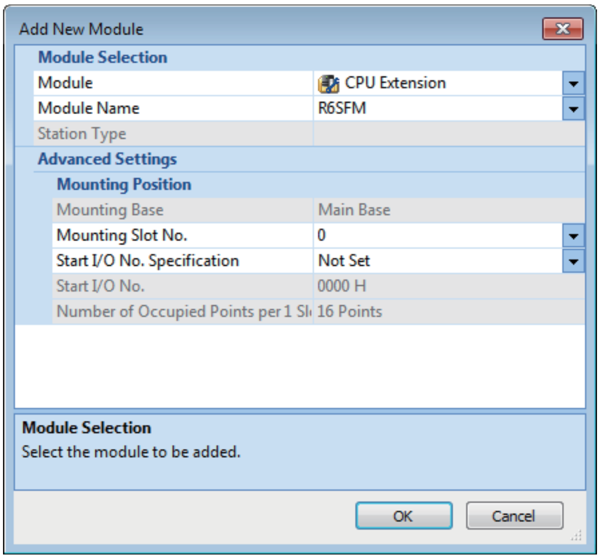

Module Selection	
Module	CPU Extension
Module Name	R6SFM
Station Type	
Advanced Settings	
Mounting Position	
Mounting Base	Main Base
Mounting Slot No.	0
Start I/O No. Specification	Not Set
Start I/O No.	0000 H
Number of Occupied Points per 1 Sl	16 Points

Module Selection
Select the module to be added.

8. Set the Simple Motion module for slot No.1.

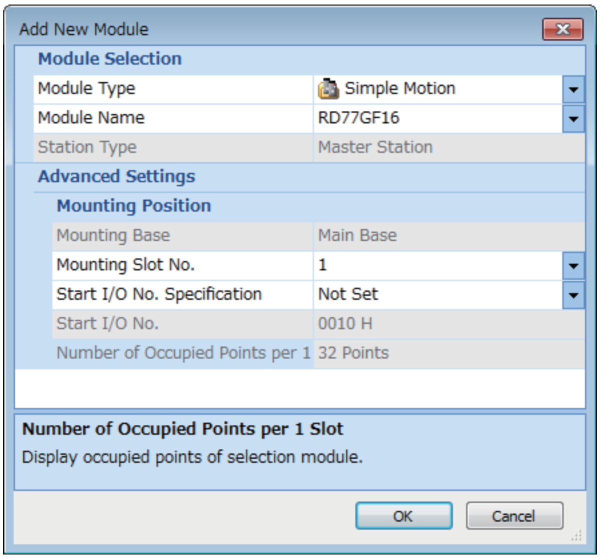

Module Selection	
Module Type	Simple Motion
Module Name	RD77GF16
Station Type	Master Station
Advanced Settings	
Mounting Position	
Mounting Base	Main Base
Mounting Slot No.	1
Start I/O No. Specification	Not Set
Start I/O No.	0010 H
Number of Occupied Points per 1	32 Points

Number of Occupied Points per 1 Slot
Display occupied points of selection module.

9. Click the [OK] button to add the module labels of the safety function module.

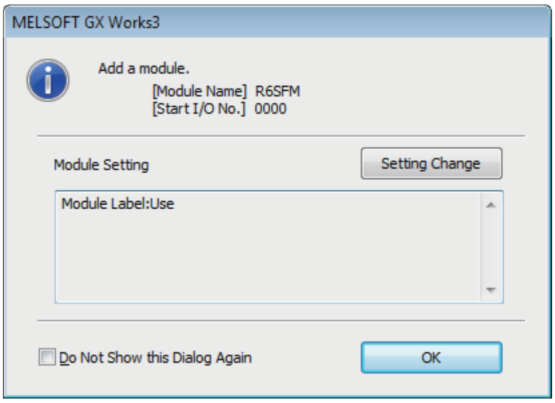
MELSOFT GX Works3

Add a module.
[Module Name] R6SFM
[Start I/O No.] 0000

Module Setting

Module Label:Use

☐ Do Not Show this Dialog Again

10. Click the [OK] button to add the module labels of the Simple Motion module.

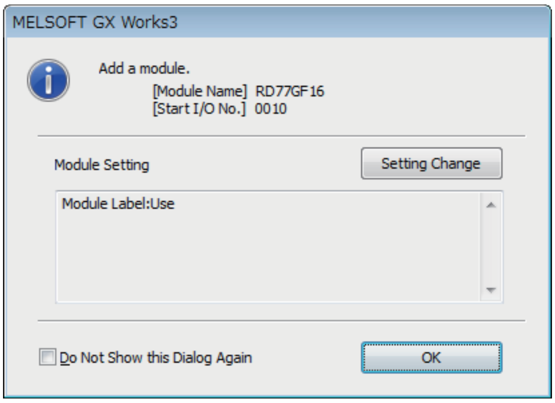
MELSOFT GX Works3

Add a module.
[Module Name] RD77GF16
[Start I/O No.] 0010

Module Setting

Module Label:Use

☐ Do Not Show this Dialog Again

11. Set the items in "Required Settings" as follows.

Navigation window ⇨ "Parameter" ⇨ "Module Information" ⇨ "RD77GF16" ⇨ "Module Parameter (Network)" ⇨ "Required Settings"

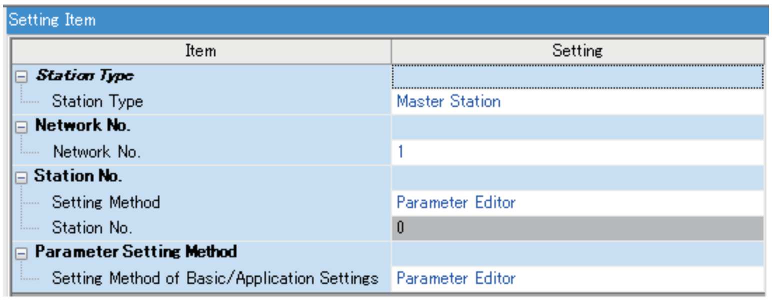
Setting Item

Item	Setting
Station Type	
Station Type	Master Station
Network No.	
Network No.	1
Station No.	
Setting Method	Parameter Editor
Station No.	0
Parameter Setting Method	
Setting Method of Basic/Application Settings	Parameter Editor

12. Set the network configuration as follows.

Navigation window ⇨ "Parameter" ⇨ "Module Information" ⇨ "RD77GF16" ⇨ "Module Parameter (Network)" ⇨ "Basic Settings" ⇨ "Network Configuration Settings"

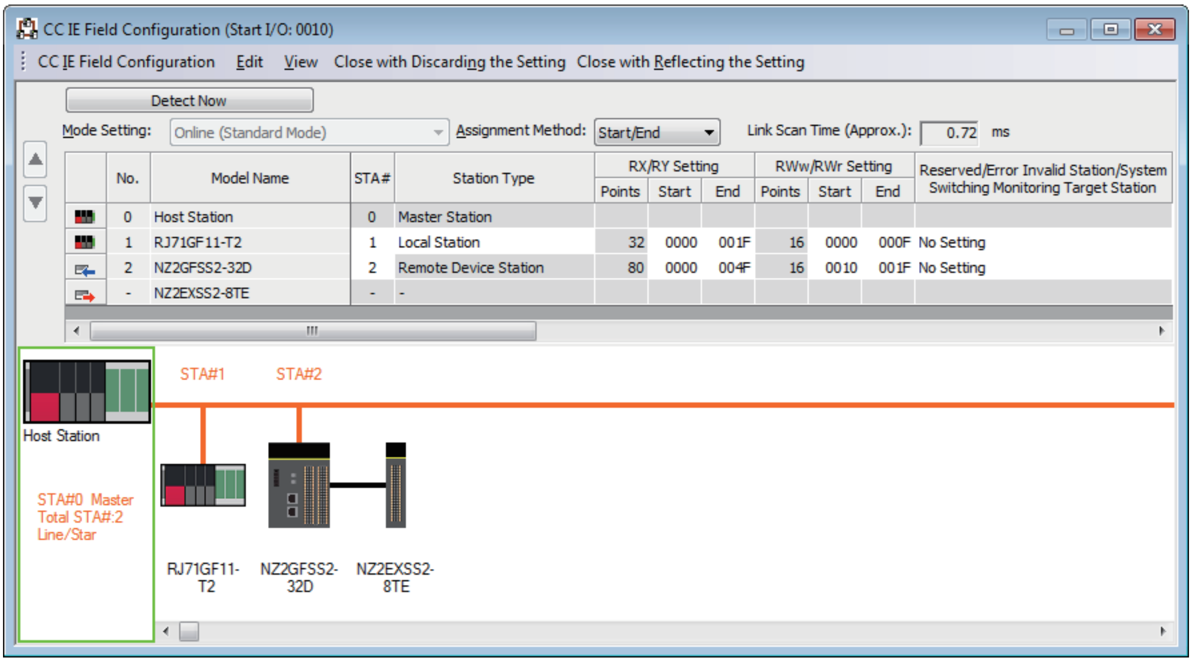
CC IE Field Configuration (Start I/O: 0010)
CC IE Field Configuration
Edit
View
Close with Discarding the Setting
Close with Reflecting the Setting
Detect Now
STA#1
STA#2
Host Station
STA#0 Master
Total STA#:2
Line/Star
RJ71GF11-T2
NZ2GFSS2-32D
NZ2EXSS2-8TE

Mode Setting: Online (Standard Mode)

Assignment Method: Start/End

Link Scan Time (Approx.): 0.72 ms

	No.	Model Name	STA#	Station Type	RX/RY Setting			RWw/RWr Setting			Reserved/Error Invalid Station/System Switching Monitoring Target Station
					Points	Start	End	Points	Start	End	
	0	Host Station	0	Master Station							
	1	RJ71GF11-T2	1	Local Station	32	0000	001F	16	0000	000F	No Setting
	2	NZ2GFSS2-32D	2	Remote Device Station	80	0000	004F	16	0010	001F	No Setting
	-	NZ2EXSS2-8TE	-	-							

- RX/RY and RWw/RWr setting of the local station is for standard communications.
- RX/RY setting of the remote device station is used as a remote control and monitor input signal in standard communications.
- RWw/RWr setting of the remote device station is used in the system of safety communications. Always set 16 points.

13. Set the refresh settings as follows.

Navigation window ⇨ "Parameter" ⇨ "Module Information" ⇨ "RD77GF16" ⇨ "Module Parameter (Network)" ⇨ "Basic Settings" ⇨ "Refresh Settings"

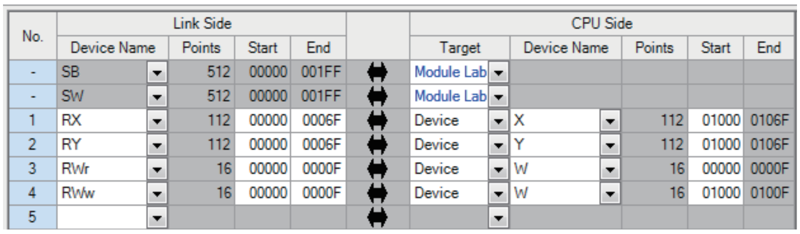

No.	Link Side					CPU Side				
	Device Name	Points	Start	End		Target	Device Name	Points	Start	End
-	SB	512	00000	001FF	⇔	Module Label				
-	SW	512	00000	001FF	⇔	Module Label				
1	RX	112	00000	0006F	⇔	Device	X	112	01000	0106F
2	RY	112	00000	0006F	⇔	Device	Y	112	01000	0106F
3	RWr	16	00000	0000F	⇔	Device	W	16	00000	0000F
4	RWw	16	00000	0000F	⇔	Device	W	16	01000	0100F
5					⇔					

- The refresh settings are for standard communications.

14. Log on to the programmable controller.

[Online] ⇨ [User Authentication] ⇨ [Log on to PLC]

- If logon cannot be performed, writing user information or initializing all information of the programmable controller is required. (📖GX Works3 Operating Manual)

15. Write the set parameters to the Safety CPU on the master station.

[Online] ⇨ [Write to PLC]

16. Set the parameters of the remote device station in the "CC IE Field Configuration" window as shown below and write the parameters.

Navigation window ⇨ "Parameter" ⇨ "Module Information" ⇨ "RD77GF16" ⇨ "Module Parameter (Network)" ⇨ "Basic Settings" ⇨ "Network Configuration Settings" ⇨ Select the NZ2GFSS2-32D in the list of stations. ⇨ [CC IE Field Configuration] ⇨ [Online] ⇨ [Parameter Processing of Slave Station]

Name	Write value
Wiring selection of input X0	1: Double wiring (NC/NC)
Wiring selection of input X1	1: Double wiring (NC/NC)
Ext. module 1_Wiring selection of output Y0	1: Double wiring (Source/Source)
Ext. module 1_Wiring selection of output Y1	1: Double wiring (Source/Source)

- For items other than above, write the initial value.
- Select [Close with Reflecting the Setting] and close the "CC IE Field Configuration" window after writing parameters of the remote device station.

17. Visually check if the parameter of the remote device station is correctly written after writing parameters. For how to check the parameters, refer to the following.

📖GX Works3 Operating Manual

18. Set "To Use or Not To Use the Safety Communication Setting" to "Use".

Navigation window ⇨ "Parameter" ⇨ "Module Information" ⇨ "RD77GF16" ⇨ "Module Parameter (Network)" ⇨ "Application Settings" ⇨ "Safety Communication Setting" ⇨ "To Use or Not To Use the Safety Communication Setting"

19. Select "Local Network" from "Communication Destination" in "Safety Communication Setting" window and set the destination module in "Select the target module for the Safety Communication Setting" window.

Navigation window ⇨ "Parameter" ⇨ "Module Information" ⇨ "RD77GF16" ⇨ "Module Parameter (Network)" ⇨ "Application Settings" ⇨ "Safety Communication Setting" ⇨ "Safety Communication Setting"

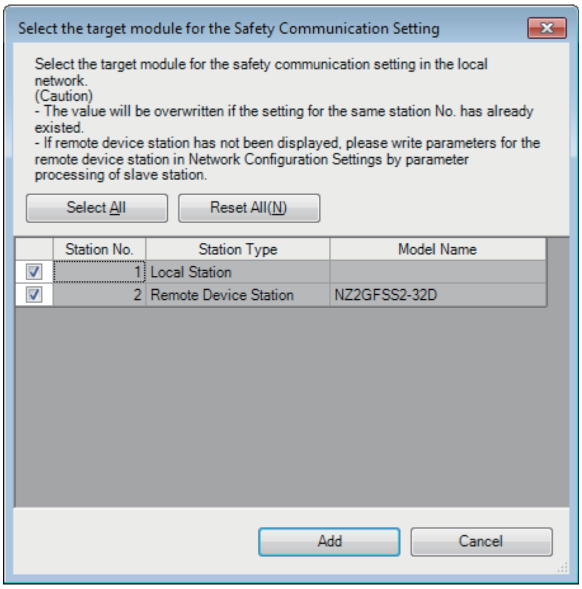
Select the target module for the Safety Communication Setting
Select All
Reset All(N)
Add
Cancel

Select the target module for the safety communication setting in the local network.
(Caution)
- The value will be overwritten if the setting for the same station No. has already existed.
- If remote device station has not been displayed, please write parameters for the remote device station in Network Configuration Settings by parameter processing of slave station.

	Station No.	Station Type	Model Name
☑	1	Local Station	
☑	2	Remote Device Station	NZ2GFSS2-32D

20. Set the safety communication setting as follows.

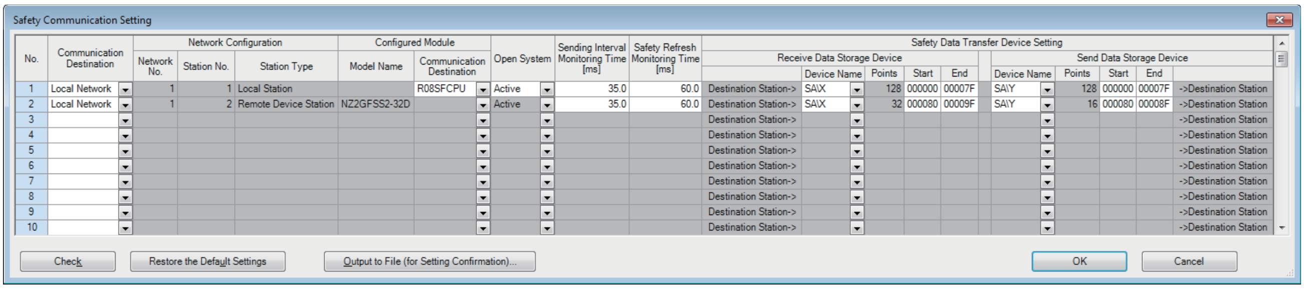
Safety Communication Setting
Check
Restore the Default Settings
Output to File (for Setting Confirmation)...
OK
Cancel

No.	Communication Destination	Network Configuration			Configured Module		Open System	Sending Interval Monitoring Time [ms]	Safety Refresh Monitoring Time [ms]	Safety Data Transfer Device Setting									
		Network No.	Station No.	Station Type	Model Name	Communication Destination				Receive Data Storage Device					Send Data Storage Device				
											Device Name	Points	Start	End	Device Name	Points	Start	End	
1	Local Network	1	1	Local Station		R08SFCPU	Active	35.0	60.0	Destination Station->	SA\X	128	000000	00007F	SA\Y	128	000000	00007F	->Destination Station
2	Local Network	1	2	Remote Device Station	NZ2GFSS2-32D		Active	35.0	60.0	Destination Station->	SA\X	32	000080	00009F	SA\Y	16	000080	00008F	->Destination Station
3										Destination Station->									->Destination Station
4										Destination Station->									->Destination Station
5										Destination Station->									->Destination Station
6										Destination Station->									->Destination Station
7										Destination Station->									->Destination Station
8										Destination Station->									->Destination Station
9										Destination Station->									->Destination Station
10										Destination Station->									->Destination Station

21. Write the set parameters to the Safety CPU on the master station.

[Online] ⇨ [Write to PLC]

22. Visually check if the safety communication setting is correctly written after writing parameters. For how to check the parameters, refer to the following.

GX Works3 Operating Manual

23. Open the "Command Execution of Slave Station" window in the "CC IE Field Configuration" window.

Navigation window ⇨ "Parameter" ⇨ "Module Information" ⇨ "RD77GF16" ⇨ "Module Parameter (Network)" ⇨ "Basic Settings" ⇨ "Network Configuration Settings" ⇨ Select the NZ2GFSS2-32D in the list of stations. ⇨ [CC IE Field Configuration] ⇨[Online] ⇨ [Command Execution of Slave Station]

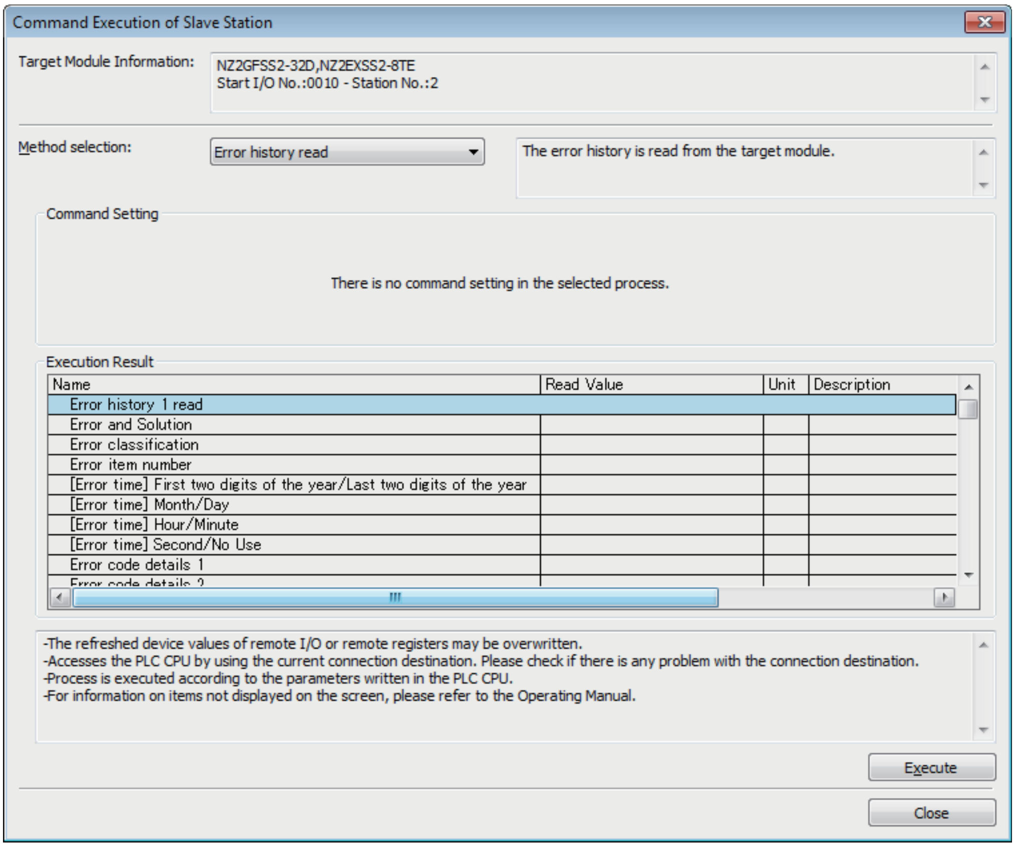

Command Execution of Slave Station

Target Module Information: NZ2GFSS2-32D,NZ2EXSS2-8TE
Start I/O No.:0010 - Station No.:2

Method selection: Error history read

The error history is read from the target module.

Command Setting

There is no command setting in the selected process.

Execution Result

Name	Read Value	Unit	Description
Error history 1 read			
Error and Solution			
Error classification			
Error item number			
[Error time] First two digits of the year/Last two digits of the year			
[Error time] Month/Day			
[Error time] Hour/Minute			
[Error time] Second/No Use			
Error code details 1			
Error code details 2			

-The refreshed device values of remote I/O or remote registers may be overwritten.
-Accesses the PLC CPU by using the current connection destination. Please check if there is any problem with the connection destination.
-Process is executed according to the parameters written in the PLC CPU.
-For information on items not displayed on the screen, please refer to the Operating Manual.

24. Select "Start of checking the module position" in "Method selection" and click the [Execute] button.

25. The SAFETY LED of the NZ2GFSS2-32D flashes. Check if the NZ2GFSS2-32D on which the SAFETY LED flashes has been installed on the desired position.

26. After checking the position of the module, select "Stop of checking the module position" in "Method selection" in the "Command Execution of Slave Station" window and click the [Execute] button.

27. The flashing of the SAFETY LED of the NZ2GFSS2-32D stops.

28. Select "Safety module validation" in "Method selection" and click the [Execute] button.

Point

- In this example, default values were used for parameters that are not shown above. For the parameter setting, refer to the chapter explaining the parameters in this manual. (☞ Page 63 PARAMETER SETTINGS)
- Depending on the time after logon to the Safety CPU, user authentication may be required again.

Setting in the local station

Connect the engineering tool to the Safety CPU of the local station and set parameters.

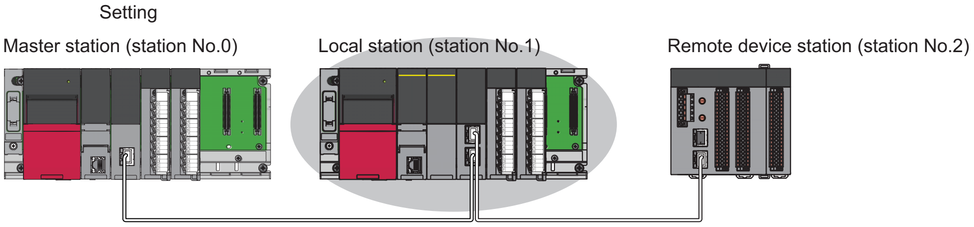
Setting
Master station (station No.0)
Local station (station No.1)
Remote device station (station No.2)

1. Set the Safety CPU and add the module label. Also, add the safety program and safety global label. The setting method is the same as that of the master station. (☞ Page 87 Setting in the master station and remote device station)
2. Set the safety function module. Follow the same procedure as that for the master station. (☞ Page 87 Setting in the master station and remote device station)
3. In the I/O assignment setting, set the master/local module for slot No.1.

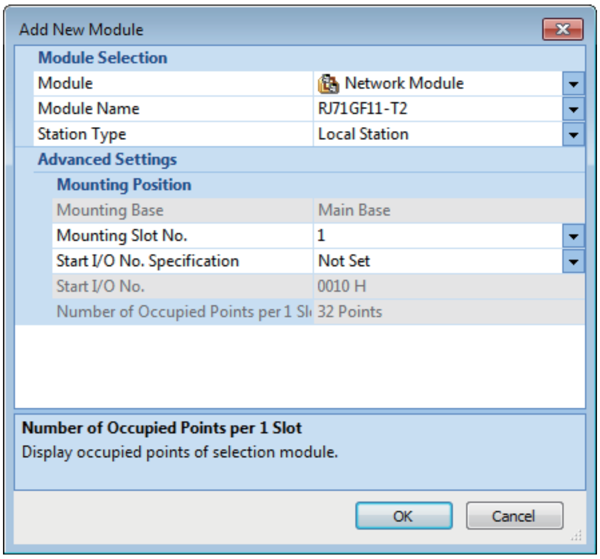

Item	Setting
Module Selection	
Module	Network Module
Module Name	RJ71GF11-T2
Station Type	Local Station
Advanced Settings	
Mounting Position	
Mounting Base	Main Base
Mounting Slot No.	1
Start I/O No. Specification	Not Set
Start I/O No.	0010 H
Number of Occupied Points per 1 Sl	32 Points

Number of Occupied Points per 1 Slot
Display occupied points of selection module.

4. Add the module labels of the safety function module and master/local module. The addition method of the module label is the same as that of the master station. (☞ Page 87 Setting in the master station and remote device station)
5. Set the items in "Required Settings" as follows.

Navigation window ⇨ "Parameter" ⇨ "Module Information" ⇨ "RJ71GF11-T2" ⇨ "Required Settings"

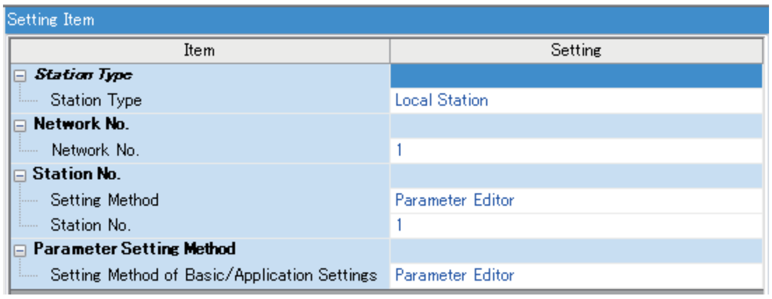

Item	Setting
Station Type	
Station Type	Local Station
Network No.	
Network No.	1
Station No.	
Setting Method	Parameter Editor
Station No.	1
Parameter Setting Method	
Setting Method of Basic/Application Settings	Parameter Editor

6. Set the refresh parameters. Set the same refresh parameters as those set for the master station. (☞ Page 87 Setting in the master station and remote device station)
7. Set "To Use or Not To Use the Safety Communication Setting" to "Use".

Navigation window ⇨ "Parameter" ⇨ "Module Information" ⇨ "RJ71GF11-T2" ⇨ "Application Settings" ⇨ "Safety Communication Setting" ⇨ "To Use or Not To Use the Safety Communication Setting"

8. Set the safety communication setting as follows.

Navigation window ⇨ "Parameter" ⇨ "Module Information" ⇨ "RJ71GF11-T2" ⇨ "Application Settings" ⇨ "Safety Communication Setting" ⇨ "Safety Communication Setting"

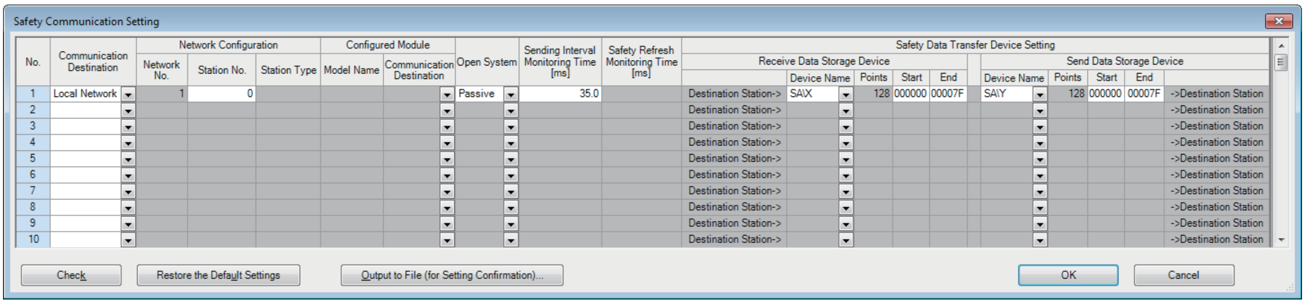

Safety Communication Setting

No.	Communication Destination	Network Configuration			Configured Module		Open System	Sending Interval Monitoring Time [ms]	Safety Refresh Monitoring Time [ms]	Safety Data Transfer Device Setting										
		Network No.	Station No.	Station Type	Model Name	Communication Destination				Receive Data Storage Device						Send Data Storage Device				
											Device Name	Points	Start	End		Device Name	Points	Start	End	
1	Local Network	1	0				Passive	35.0		Destination Station->	SA\X	128	000000	00007F		SA\Y	128	000000	00007F	->Destination Station
2										Destination Station->										->Destination Station
3										Destination Station->										->Destination Station
4										Destination Station->										->Destination Station
5										Destination Station->										->Destination Station
6										Destination Station->										->Destination Station
7										Destination Station->										->Destination Station
8										Destination Station->										->Destination Station
9										Destination Station->										->Destination Station
10										Destination Station->										->Destination Station

Check
Restore the Default Settings
Output to File (for Setting Confirmation)...
OK
Cancel

9. Log on to the programmable controller.

[Online] ⇨ [User Authentication] ⇨ [Log on to PLC]

- If logon cannot be performed, writing user information or initializing all information of the programmable controller is required. (GX Works3 Operating Manual)

10. Write the set parameters to the Safety CPU on the local station.

[Online] ⇨ [Write to PLC]

11. Visually check if the safety communication setting is correctly written after writing parameters. For how to check the parameters, refer to the following.

GX Works3 Operating Manual

Point

In this example, default values were used for parameters that are not shown above. For the parameter setting, refer to the chapter explaining the parameters in this manual. (Page 63 PARAMETER SETTINGS)

Checking the network status

After starting up the system, check whether data link can be normally performed using the CC-Link IE Field Network diagnostics in the engineering tool.

1. Connect the engineering tool to the Safety CPU on the master station.

2. Start the CC-Link IE Field Network diagnostics.

[Diagnostics] ⇨ [CC-Link IE Field Diagnostics]

If the following display appears, data link is normal.

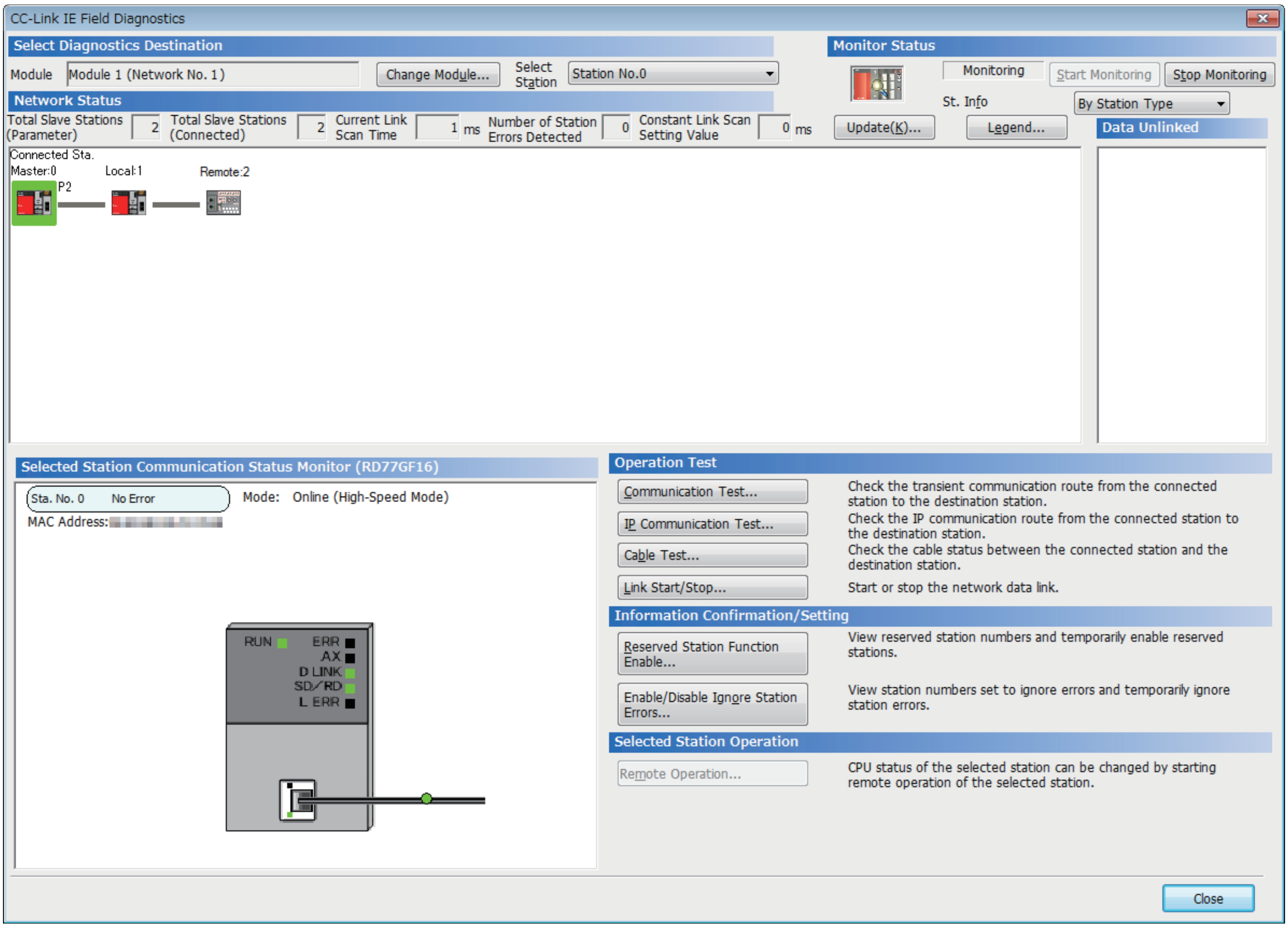

CC-Link IE Field Diagnostics

Module: Module 1 (Network No. 1)

Select Station: Station No.0

Total Slave Stations (Parameter): 2

Total Slave Stations (Connected): 2

Current Link Scan Time: 1 ms

Number of Station Errors Detected: 0

Constant Link Scan Setting Value: 0 ms

Selected Station Communication Status Monitor (RD77GF16)

Sta. No. 0 No Error

Mode: Online (High-Speed Mode)

MAC Address:

Communication Test...: Check the transient communication route from the connected station to the destination station.

IP Communication Test...: Check the IP communication route from the connected station to the destination station.

Cable Test...: Check the cable status between the connected station and the destination station.

Link Start/Stop...: Start or stop the network data link.

Reserved Station Function Enable...: View reserved station numbers and temporarily enable reserved stations.

Enable/Disable Ignore Station Errors...: View station numbers set to ignore errors and temporarily ignore station errors.

Remote Operation...: CPU status of the selected station can be changed by starting remote operation of the selected station.

Select Diagnostics Destination
Change Module...
Monitor Status
Monitoring
Start Monitoring
Stop Monitoring
St. Info
By Station Type
Network Status
Update(K)...
Legend...
Data Unlinked
Connected Sta.
Master:0
Local:1
Remote:2
P2
RUN
ERR
AX
D LINK
SD/RD
L ERR
Operation Test
Information Confirmation/Setting
Selected Station Operation
Close

If an error icon appears in "Network Status" area on the "CC-Link IE Field Diagnostics" window, use the CC-Link IE Field Network diagnostics to identify the cause of the error and take corrective actions. (☞ Page 104 Checking the Network Status)

Program examples

The following shows a program example of each station when the safety program and safety global device are used.

Program example

- Master station (station No.0)

Classification	Device	Description
Safety special register	SA\SD1008.0	Safety refresh communication status of each safety connection (1st module) (safety connection No.1)
	SA\SD1008.1	Safety refresh communication status of each safety connection (1st module) (safety connection No.2)
	SA\SD1232.0	Interlock status of each safety connection (1st module) (safety connection No.1)
	SA\SD1232.1	Interlock status of each safety connection (1st module) (safety connection No.2)
	SA\SD1240.0	Interlock release request for each safety connection (1st module) (safety connection No.1)
	SA\SD1240.1	Interlock release request for each safety connection (1st module) (safety connection No.2)
Label to be defined	Define safety global labels as shown below: 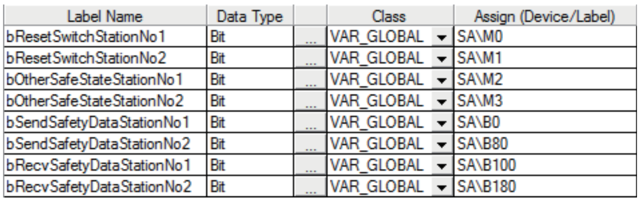	

Label Name	Data Type		Class	Assign (Device/Label)
bResetSwitchStationNo1	Bit	...	VAR_GLOBAL	SA\M0
bResetSwitchStationNo2	Bit	...	VAR_GLOBAL	SA\M1
bOtherSafeStateStationNo1	Bit	...	VAR_GLOBAL	SA\M2
bOtherSafeStateStationNo2	Bit	...	VAR_GLOBAL	SA\M3
bSendSafetyDataStationNo1	Bit	...	VAR_GLOBAL	SA\B0
bSendSafetyDataStationNo2	Bit	...	VAR_GLOBAL	SA\B80
bRecvSafetyDataStationNo1	Bit	...	VAR_GLOBAL	SA\B100
bRecvSafetyDataStationNo2	Bit	...	VAR_GLOBAL	SA\B180

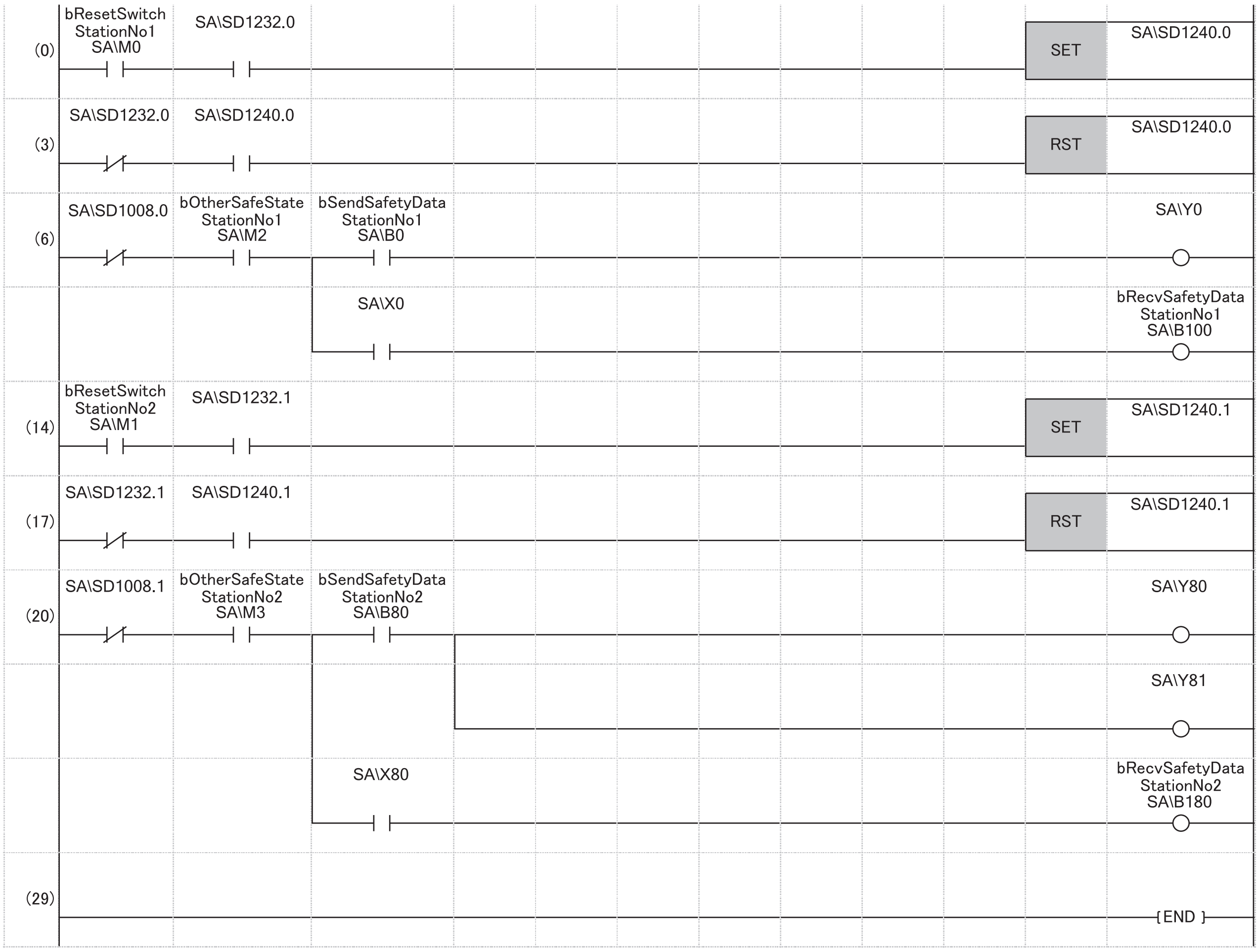
(0)
bResetSwitch StationNo1 SA\M0
SA\SD1232.0
SET
SA\SD1240.0
(3)
SA\SD1232.0
SA\SD1240.0
RST
SA\SD1240.0
(6)
SA\SD1008.0
bOtherSafeState StationNo1 SA\M2
bSendSafetyData StationNo1 SA\B0
SA\Y0
SA\X0
bRecvSafetyData StationNo1 SA\B100
(14)
bResetSwitch StationNo2 SA\M1
SA\SD1232.1
SET
SA\SD1240.1
(17)
SA\SD1232.1
SA\SD1240.1
RST
SA\SD1240.1
(20)
SA\SD1008.1
bOtherSafeState StationNo2 SA\M3
bSendSafetyData StationNo2 SA\B80
SA\Y80
SA\Y81
SA\X80
bRecvSafetyData StationNo2 SA\B180
(29)
END

(0) Processing to release the safety station interlock status in safety communications with station No.1
(6) Communication program with station No.1
(14) Processing to release the safety station interlock status in safety communications with station No.2
(20) Communication program with station No.2

- Local station (station No.1)

Classification	Device	Description
Safety special register	SA\SD1008.0	Safety refresh communication status of each safety connection (1st module) (safety connection No.1)
	SA\SD1232.0	Interlock status of each safety connection (1st module) (safety connection No.1)
	SA\SD1240.0	Interlock release request for each safety connection (1st module) (safety connection No.1)
Label to be defined	Define safety global labels as shown below: 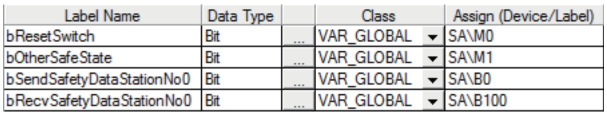	

Label Name	Data Type		Class	Assign (Device/Label)
bResetSwitch	Bit	...	VAR_GLOBAL ▾	SA\M0
bOtherSafeState	Bit	...	VAR_GLOBAL ▾	SA\M1
bSendSafetyDataStationNo0	Bit	...	VAR_GLOBAL ▾	SA\B0
bRecvSafetyDataStationNo0	Bit	...	VAR_GLOBAL ▾	SA\B100

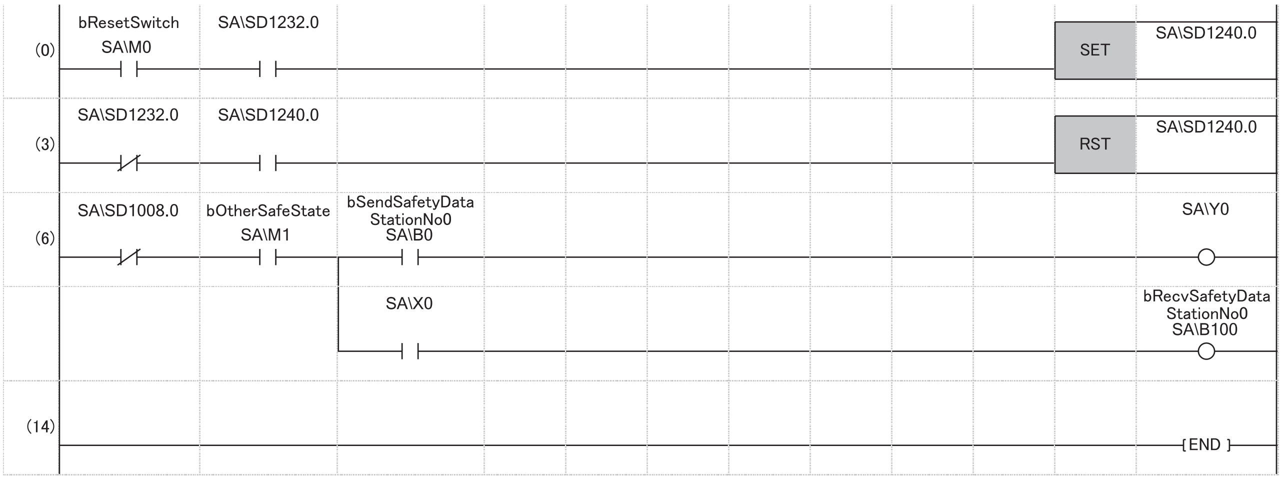
(0)
bResetSwitch
SA\M0
SA\SD1232.0
SET
SA\SD1240.0
(3)
SA\SD1232.0
SA\SD1240.0
RST
SA\SD1240.0
(6)
SA\SD1008.0
bOtherSafeState
SA\M1
bSendSafetyData
StationNo0
SA\B0
SA\Y0
SA\X0
bRecvSafetyData
StationNo0
SA\B100
(14)
END

(0) Processing to release the safety station interlock status in safety communications with station No.0 (master station)

(6) Communication program with station No.0 (master station)

4 TROUBLESHOOTING

This chapter describes troubleshooting of CC-Link IE Field Network.

4.1 Checking with LED

This section describes troubleshooting using LED.

Error status can be determined by status of the RUN LED and the ERR LED.

RUN LED	ERR LED	Error status[1]	Description
Off	On, flashing	Major error	An error such as hardware failure or memory failure. The module stops operating.
On	Flashing	Moderate error	An error, such as parameter error, which affect module operation. The module stops operating.
On	On	Minor error	An error such as communication failure. The module continues operating.

[1] When multiple errors occur, the error status is displayed in the order of major, moderate, and minor.

When the RUN LED turns off

When the RUN LED turns off after powering on the Simple Motion module, check the following.

Check item	Action
Is the Simple Motion module mounted correctly?	Securely mount the Simple Motion module on the base unit.

When the ERR LED turns on or is flashing

When the ERR LED turns on or is flashing, check the following.

Check item	Action
Does any error occur in the module diagnostics?	Take the actions displayed on the window.
Is the disconnected station displayed in the CC-Link IE Field Network diagnostics?	• Correct "Network Configuration Settings" in "Basic Settings" of the master station in accordance with the slave station actually connected. • Perform troubleshooting for when the D LINK LED turns off or is flashing. (☞ Page 100 When the D LINK LED turns off or is flashing)

If the above actions do not solve the problem, perform the following tests to check for an error.

- Cable test (☞ Page 115 Cable Test)

When the D LINK LED turns off or is flashing

When the D LINK LED turns off or is flashing, check the following.

Check item	Action
Is the master station operating normally?	• If an error has occurred in the CPU module on the master station, eliminate the cause of the CPU module error. (📖MELSEC iQ-R CPU Module User's Manual (Application)) • Check if the master station is performing data link using CC-Link IE Field Network diagnostics. (☞ Page 104 Checking the Network Status)
Is the master station connected to the network?	Check if the master station is performing data link using CC-Link IE Field Network diagnostics. (☞ Page 104 Checking the Network Status)
Do the used Ethernet cables conform to the Ethernet standard?	Replace the cables with the Ethernet cable which conforms the standard. (📖MELSEC iQ-R Simple Motion Module User's Manual (Startup))
Does the station-to-station distance meet the specifications?	Set the station-to-station distance within range. (📖MELSEC iQ-R Simple Motion Module User's Manual (Startup))
Does the cabling condition (bending radius) meet the specifications?	Refer to the manual for the Ethernet cable, and correct the bending radius.
Is any Ethernet cable disconnected?	Replace the Ethernet cable.
Are 121 or more slave stations connected?	Change the connection of the slave stations to 120 stations or less.
Are other stations connected to the Simple Motion module operating normally?	• Check if the modules on the other stations are performing data link using CC-Link IE Field Network diagnostics. (☞ Page 104 Checking the Network Status) • Check the operation status of modules on other stations. (📖User's manual for the module used)
Is the switching hub used operating normally?	• Check if the switching hub which conforms the standard is used. (📖MELSEC iQ-R Simple Motion Module User's Manual (Startup)) • Power off and on the switching hub.
Are station Nos. unique?	Change the duplicated station No.
The devices having different network types (such as CC-Link IE Controller Network and CC-Link IE Controller Network) are connected to the same network line.	Divide it into CC-Link IE Controller Network (Ethernet cable) and the network. After taking the above actions, power off and on or reset all stations where the error was detected.

If the above actions do not solve the problem, perform the following tests to check for an error.

- Cable test (☞ Page 115 Cable Test)

When the L ERR LED turns on

When the L ERR LED turns on, check the following.

Check item	Action
Are the Ethernet cables used normally?	• Check if the Ethernet cable which conforms the standard is used. (📖MELSEC iQ-R Simple Motion Module User's Manual (Startup)) • Check if the station-to-station distance is set within range. (📖MELSEC iQ-R Simple Motion Module User's Manual (Startup)) • Check if the Ethernet cables are not disconnected.
Is the switching hub used operating normally?	• Check if the switching hub which conforms the standard is used. (📖MELSEC iQ-R Simple Motion Module User's Manual (Startup)) • Power off and on the switching hub.
Are other stations connected to the Simple Motion module operating normally?	• Check if the modules on the other stations are performing data link using CC-Link IE Field Network diagnostics. (☞ Page 104 Checking the Network Status) • Check the operation status of modules on other stations. (📖User's manual for the module used)
Is "Module Operation Mode" under "Application Settings" of the master station set to "Online"?	Set "Module Operation Mode" under "Application Settings" of the master station to "Online".
Is there any source of noise near the module or cables?	Change the location of the module or cables.

If the above actions do not solve the problem, perform troubleshooting for when communication is unstable. (☞ Page 125 When communication is unstable)

When the L ER LED turns on

When the L ER LED turns on, check the following.

Check item	Action
Are the Ethernet cables used normally?	• Check if the Ethernet cable which conforms the standard is used. (📖MELSEC iQ-R Simple Motion Module User's Manual (Startup)) • Check if the station-to-station distance is set within range. (📖MELSEC iQ-R Simple Motion Module User's Manual (Startup)) • Check if the Ethernet cables are not disconnected.
Is the switching hub used operating normally?	• Check if the switching hub which conforms the standard is used. (📖MELSEC iQ-R Simple Motion Module User's Manual (Startup)) • Power off and on the switching hub.
Is there any source of noise near the module or cables?	Change the location of the module or cables.

If the above actions do not solve the problem, perform the following tests to check for an error.

- Troubleshooting for when communication is unstable (☞ Page 125 When communication is unstable)

When the LINK LED turns off

When the LINK LED turns off, check the following.

Check item	Action
Do the used Ethernet cables conform to the Ethernet standard?	Replace the cables with the Ethernet cable which conforms the standard. (📖MELSEC iQ-R Simple Motion Module User's Manual (Startup))
Does the station-to-station distance meet the specifications?	Set the station-to-station distance within range. (📖MELSEC iQ-R Simple Motion Module User's Manual (Startup))
Does the cabling condition (bending radius) meet the specifications?	Refer to the manual for the Ethernet cable, and correct the bending radius.
Is any Ethernet cable disconnected?	Replace the Ethernet cable.
Is the switching hub used operating normally?	• Check if the switching hub which conforms the standard is used. (📖MELSEC iQ-R Simple Motion Module User's Manual (Startup)) • Power off and on the switching hub.
Are other stations connected to the Simple Motion module operating normally?	• Check if the modules on the other stations are performing data link using CC-Link IE Field Network diagnostics. (☞ Page 104 Checking the Network Status) • Check the operation status of modules on other stations. (📖User's manual for the module used)

If the above actions do not solve the problem, perform the following tests to check for an error.

- Cable test (☞ Page 115 Cable Test)

4.2 Checking the Module Status

The following items can be checked in the "Module Diagnostics" window for the Simple Motion module.

Item		Description
Error Information		Displays the details of the errors currently occurring. Click the [Event History] button to check the history of errors that have occurred on the network, errors detected for each module, and operations that have been executed.
Module Information List		Displays various status information of the Simple Motion module.
Supplementary Function	CCIEF diagnostics	Enables checking the cause to resolve the problem when an error occurs in CC-Link IE Field Network. (☞ Page 104 Checking the Network Status)

Error Information

Check the details of the error currently occurring and action to remove the error.

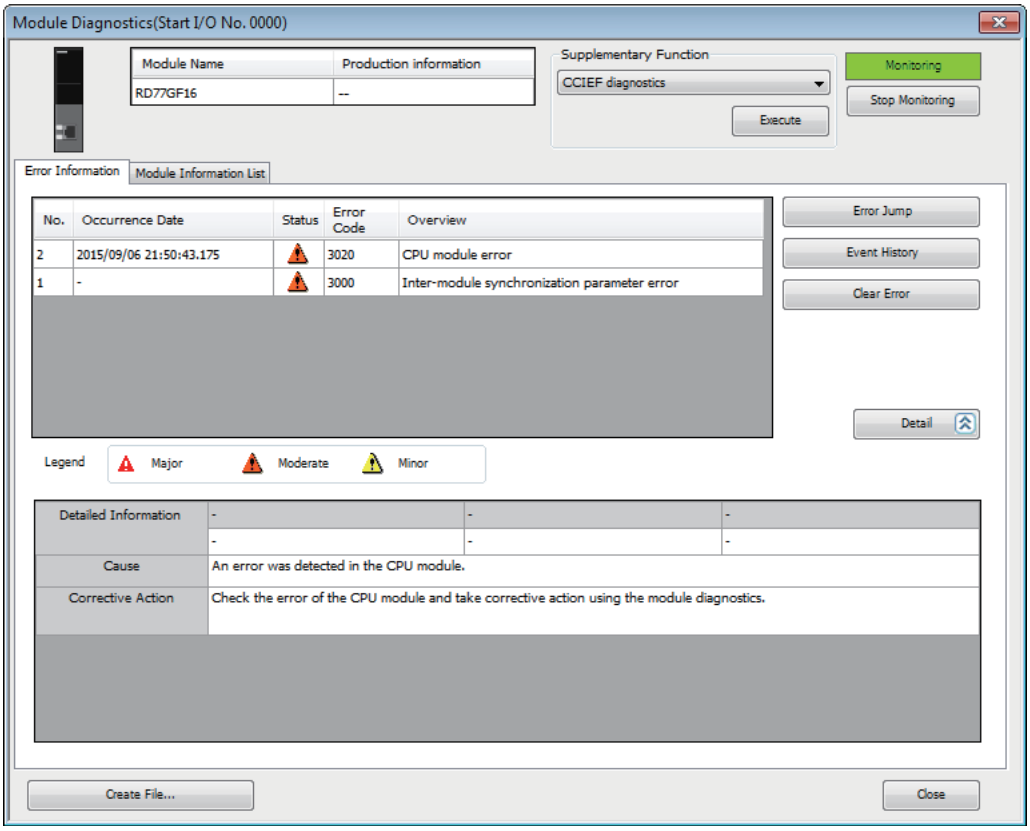
Supplementary Function
CCIEF diagnostics
Execute
Monitoring
Stop Monitoring
Error Information
Module Information List
Error Jump
Event History
Clear Error
Detail
Legend
Major
Moderate
Minor
Create File...
Close

Module Diagnostics(Start I/O No. 0000)

Module Name	Production information
RD77GF16	--

No.	Occurrence Date	Status	Error Code	Overview
2	2015/09/06 21:50:43.175	⚠	3020	CPU module error
1	-	⚠	3000	Inter-module synchronization parameter error

Detailed Information	-	-	-
	-	-	-
Cause	An error was detected in the CPU module.		
Corrective Action	Check the error of the CPU module and take corrective action using the module diagnostics.		

Item	Description
Status	Major: An error such as hardware failure or memory failure. The module stops operating.
	Moderate: An error, such as parameter error, which affect module operation. The module stops operating.
	Minor: An error such as communication failure. The module continues operating.
Detailed Information	Displays detailed information about each error (maximum of 3 pieces).
Cause	Displays the detailed error causes.
Corrective Action	Displays the actions to eliminate the error causes.

Module Information List

Switch to the [Module Information List] tab to check various status information of the Simple Motion module.

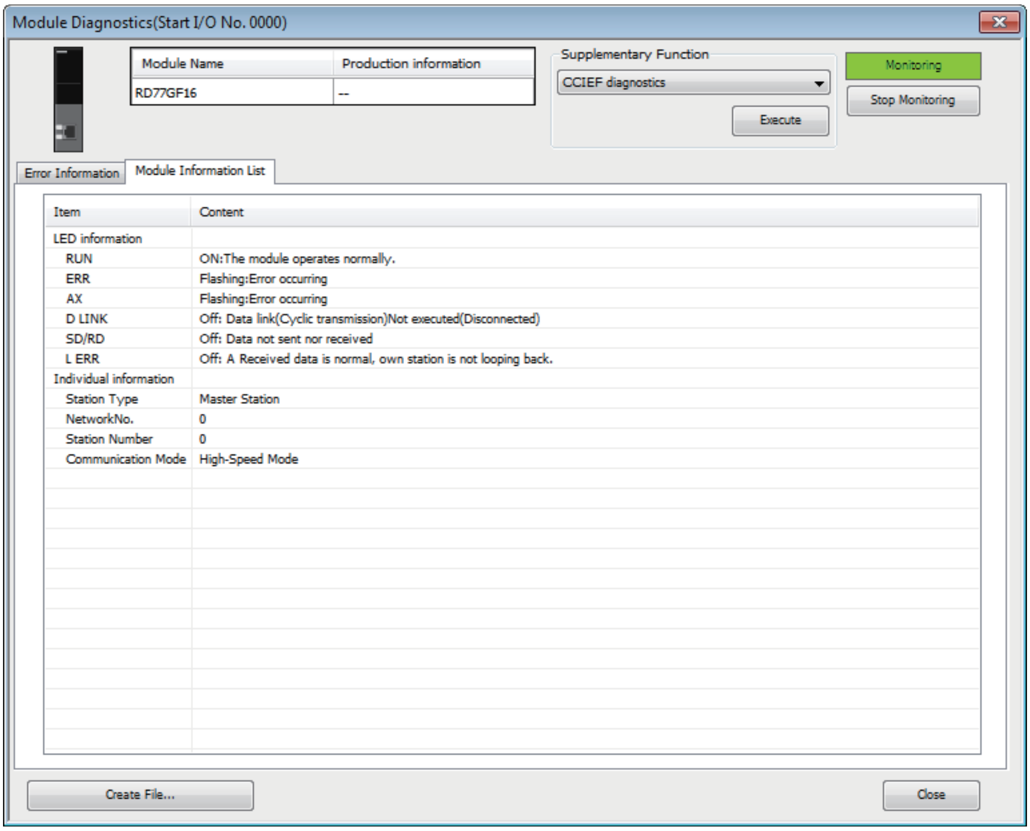
Module Diagnostics(Start I/O No. 0000)
Supplementary Function
Execute
Monitoring
Stop Monitoring
Error Information
Module Information List
Create File...
Close

Module Name	Production information
RD77GF16	--

Supplementary Function: CCIEF diagnostics

Item	Content
LED information	
RUN	ON:The module operates normally.
ERR	Flashing:Error occurring
AX	Flashing:Error occurring
D LINK	Off: Data link(Cyclic transmission)Not executed(Disconnected)
SD/RD	Off: Data not sent nor received
L ERR	Off: A Received data is normal, own station is not looping back.
Individual information	
Station Type	Master Station
NetworkNo.	0
Station Number	0
Communication Mode	High-Speed Mode

Item		Description
LED information		Displays the LED status of the Simple Motion module.
Individual information	Station Type	Displays the station type set for the selected module.
	Network No.	Displays the network No. set for the selected module.
	Station No.	Displays the station No. set for the selected module.
	Communication Mode	Displays the communication mode set for the selected module.

4.3 Checking the Network Status

Perform the CC-Link IE Field Network diagnostics to check the network status and error details or to perform an operation test for troubleshooting.

Diagnostic items

The following table lists items that can be diagnosed by the CC-Link IE Field Network diagnostics.

Restriction

Some items are not supported depending on the slave station.

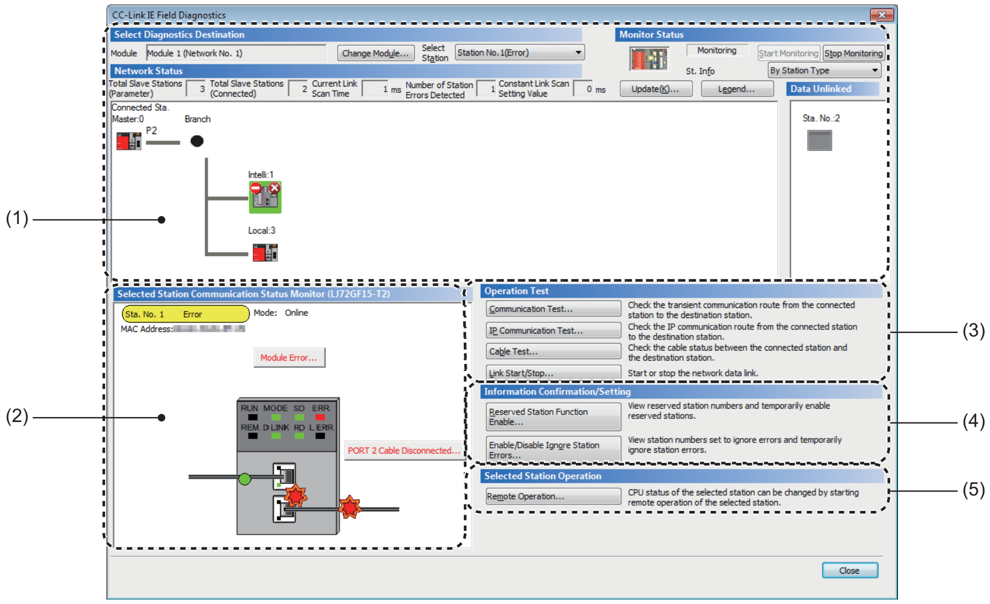
CC-Link IE Field Diagnostics
Select Diagnostics Destination
Change Module...
Select Station
Network Status
Monitor Status
Monitoring
Start Monitoring
Stop Monitoring
St. Info
Update(K)...
Legend...
Data Unlinked
Connected Sta.
Master:0
P2
Branch
Intelli:1
Local:3
Sta. No.:2
Selected Station Communication Status Monitor (LJ72GF15-T2)
Module Error...
RUN MODE SD ERR.
REM. D LINK RD L ERR.
PORT 2 Cable Disconnected...
Operation Test
Communication Test...
IP Communication Test...
Cable Test...
Link Start/Stop...
Information Confirmation/Setting
Reserved Station Function Enable...
Enable/Disable Ignore Station Errors...
Selected Station Operation
Remote Operation...
Close
(1)
(2)
(3)
(4)
(5)

Module: Module 1 (Network No. 1)

Select Station: Station No. 1(Error)

By Station Type

Total Slave Stations (Parameter): 3

Total Slave Stations (Connected): 2

Current Link Scan Time: 1 ms

Number of Station Errors Detected: 1

Constant Link Scan Setting Value: 0 ms

Sta. No. 1 Error

Mode: Online

MAC Address:[redacted]

Communication Test... Check the transient communication route from the connected station to the destination station.

IP Communication Test... Check the IP communication route from the connected station to the destination station.

Cable Test... Check the cable status between the connected station and the destination station.

Link Start/Stop... Start or stop the network data link.

Reserved Station Function Enable... View reserved station numbers and temporarily enable reserved stations.

Enable/Disable Ignore Station Errors... View station numbers set to ignore errors and temporarily ignore station errors.

Remote Operation... CPU status of the selected station can be changed by starting remote operation of the selected station.

■When "No Specification" is specified in "Other Station Setting" on the "Specify Connection Destination Connection" window

○: Diagnosed

Item		The engineering tool is connected to:	Restrictions	Reference
		Master station		
(1)	Network map and error status	○	—	☞ Page 109 Diagnostics window
	Cable disconnection and disconnected station	○	—	
(2)	Status of the selected station and the error definition	○	This item is not displayed when the selected module does not support "Selected Station Communication Status Monitor" of the engineering tool.	
	Station No. setting of the slave station	○	—	
(3)	Communication Test	○	—	☞ Page 37 Communication test
	IP Communication Test	○	—	☞ Page 46 IP communication test
	Cable Test	○	—	☞ Page 115 Cable Test
	Link Start/Stop	○	—	☞ Page 116 Link Start/Stop
(4)	Reserved Station Function Enable	○	—	☞ Page 118 Reserved Station Function Enable
	Enable/Disable Ignore Station Errors	○	—	☞ Page 120 Enable/Disable Ignore Station Errors
(5)	Remote Operation	○	When the selected station is other than MELSEC iQ-R series, this function cannot be executed.	☞ Page 123 Remote Operation

■When a setting other than "No Specification" is specified in "Other Station Setting" on the "Specify Connection Destination Connection" window

○: Diagnosed, ×: Not diagnosed

Item		The engineering tool is connected to:	Restrictions	Reference
		Master station		
(1)	Network map and error status	○	—	☞ Page 109 Diagnostics window
	Cable disconnection and disconnected station	○	—	
(2)	Status of the selected station and the error definition	○	This item is not displayed when the selected module does not support "Selected Station Communication Status Monitor" of the engineering tool.	
	Station No. setting of the slave station	○	—	
(3)	Communication Test	×	—	—
	IP Communication Test	×	—	—
	Cable Test	×	—	—
	Link Start/Stop	×	—	—
(4)	Reserved Station Function Enable	×	—	—
	Enable/Disable Ignore Station Errors	×	—	—
(5)	Remote Operation	○	When the selected station is other than MELSEC iQ-R series, this function cannot be executed.	☞ Page 123 Remote Operation

Point

When starting the CC-Link IE Field Network diagnostics with a setting other than "No Specification" in "Other Station Setting" on the "Specify Connection Destination Connection" window, use the engineering tool of the version 1.035M or later.

Starting diagnostics

This section describes how to use the CC-Link IE Field Network diagnostics.

■When "No Specification" is specified in "Other Station Setting" on the "Specify Connection Destination Connection" window

1. Connect the engineering tool to the CPU module.

If a slave station cannot be monitored due to an error such as cable disconnection, directly connect the supported engineering tool to the slave station.

2. Start the CC-Link IE Field Network diagnostics.

[Diagnostics] ⇨ [CC-Link IE Field Diagnostics]

3. When the following window opens, select the Simple Motion module to be diagnosed and click the [OK] button to start the CC-Link IE Field Network diagnostics.

Modules are listed in the order configured in module information.

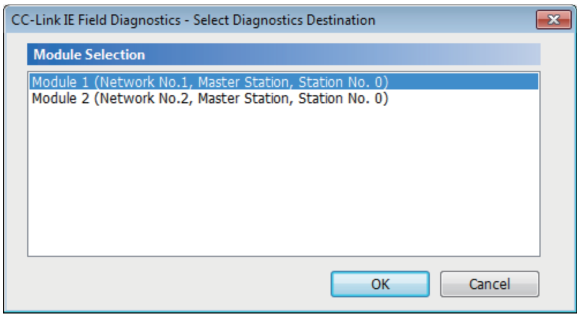

CC-Link IE Field Diagnostics - Select Diagnostics Destination

Module Selection

Module 1 (Network No.1, Master Station, Station No. 0)
Module 2 (Network No.2, Master Station, Station No. 0)

Point

When multiple Simple Motion modules of the same network No. are mounted on the same base unit, the module with the smallest start I/O No. is always diagnosed, regardless of setting.

4. Select the station to be diagnosed from "Select Station" or in "Network Status".

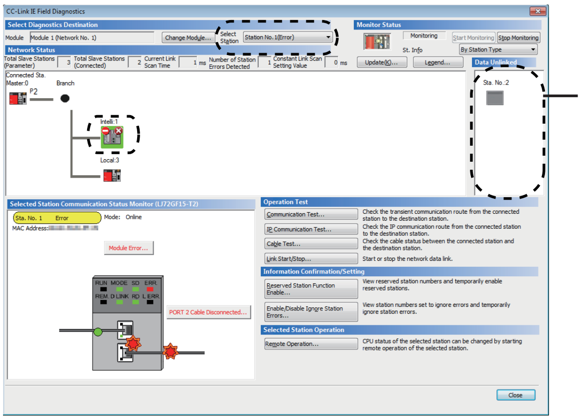

CC-Link IE Field Diagnostics

Select Diagnostics Destination

Module: Module 1 (Network No. 1)

Select Station: Station No.1(Error)

Network Status

Total Slave Stations (Parameter): 3

Total Slave Stations (Connected): 2

Current Link Scan Time: 1 ms

Number of Station Errors Detected: 1

Constant Link Scan Setting Value: 0 ms

Monitor Status: Monitoring

St. Info: By Station Type

Selected Station Communication Status Monitor (LJ72GF15-T2)

Sta. No. 1 Error

Mode: Online

MAC Address: [redacted]

Operation Test

Communication Test... Check the transient communication route from the connected station to the destination station.

IP Communication Test... Check the IP communication route from the connected station to the destination station.

Cable Test... Check the cable status between the connected station and the destination station.

Link Start/Stop... Start or stop the network data link.

Information Confirmation/Setting

Reserved Station Function Enable... View reserved station numbers and temporarily enable reserved stations.

Enable/Disable Ignore Station Errors... View station numbers set to ignore errors and temporarily ignore station errors.

Selected Station Operation

Remote Operation... CPU status of the selected station can be changed by starting remote operation of the selected station.

Disconnected station

- An icon indicating an error is displayed on the module icon of the station where an error occurs.
- A disconnected station that has performed data link is indicated with the "Disconnected Station" icon in the network map. However, a disconnected station in following case is displayed on the right end of the area.

Stations displayed on the right end of the area

- A station that was reconnected to a network after disconnecting/inserting the cable or powering off and on the system, and remains disconnected
- A disconnected station with the station icon deleted in the network map by clicking the [Update] button

- The "Error" icon is displayed on the icon of a cable where a communication error occurs. To check the details of the communication error, click the neighboring stations of the "Error" icon.

Point

When the station to be diagnosed cannot be selected, the status of network No. disparity, master station duplication, or station No. duplication cannot be checked using the CC-Link IE Field Network diagnostics. Check the error details by directly connecting the supported engineering tool to the slave station where an error occurs, and opening the "System Monitor" window.

5. The status of a station selected in "Network Status" is displayed in "Selected Station Communication Status Monitor". (☞ Page 109 Diagnostics window)

The station status is displayed on the top of "Selected Station Communication Status Monitor".

If an error occurs, a button indicating the error such as [PORT2 Communication Error] is displayed in "Selected Station Communication Status Monitor". Click the button to check the error details and actions.

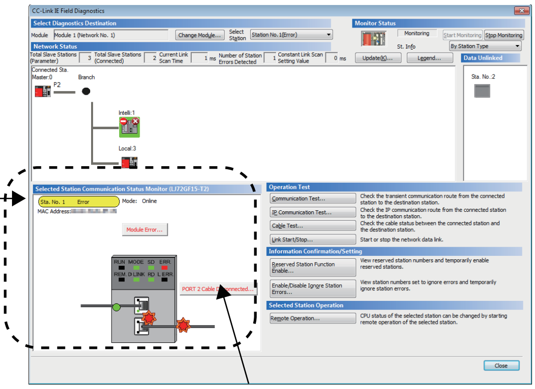
CC-Link IE Field Diagnostics
Select Diagnostics Destination
Module
Module 1 (Network No. 1)
Change Module...
Select Station
Station No. 1(Error)
Monitor Status
Monitoring
Start Monitoring
Stop Monitoring
St. Info
By Station Type
Network Status
Total Slave Stations (Parameter) 3
Total Slave Stations (Connected) 2
Current Link Scan Time 1 ms
Number of Station Errors Detected 1
Constant Link Scan Setting Value 0 ms
Update(K)...
Legend...
Data Unlinked
Sta. No.:2
Connected Sta.
Master:0
P2
Branch
Intelli:1
Local:3
Selected Station Communication Status Monitor (LJ72GF15-T2)
Sta. No. 1 Error
Mode: Online
MAC Address:
Module Error...
RUN MODE SD ERR.
REM. D LINK RD L ERR.
PORT 2 Cable Disconnected...
Operation Test
Communication Test...
IP Communication Test...
Cable Test...
Link Start/Stop...
Information Confirmation/Setting
Reserved Station Function Enable...
Enable/Disable Ignore Station Errors...
Selected Station Operation
Remote Operation...
Close

Check the transient communication route from the connected station to the destination station.

Check the IP communication route from the connected station to the destination station.

Check the cable status between the connected station and the destination station.

Start or stop the network data link.

View reserved station numbers and temporarily enable reserved stations.

View station numbers set to ignore errors and temporarily ignore station errors.

CPU status of the selected station can be changed by starting remote operation of the selected station.

The status of the selected station is displayed.

Click.

6. Various tests and operations can be performed by clicking the "Operation Test", "Information Confirmation/Setting", or "Selected Station Operation" on the bottom left of the window. (☞ Page 116 Link Start/Stop to Page 123 Remote Operation)

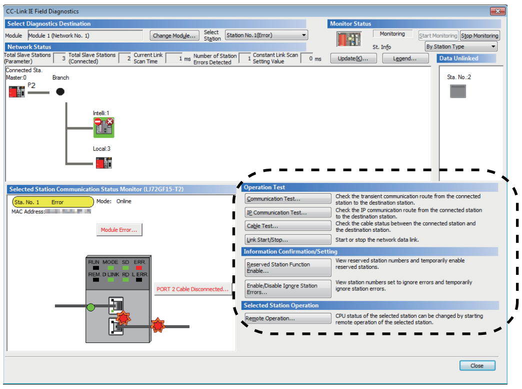
CC-Link IE Field Diagnostics
Select Diagnostics Destination
Module
Module 1 (Network No. 1)
Change Module...
Select Station
Station No. 1(Error)
Monitor Status
Monitoring
Start Monitoring
Stop Monitoring
St. Info
By Station Type
Network Status
Total Slave Stations (Parameter) 3
Total Slave Stations (Connected) 2
Current Link Scan Time 1 ms
Number of Station Errors Detected 1
Constant Link Scan Setting Value 0 ms
Update(K)...
Legend...
Data Unlinked
Sta. No.:2
Connected Sta.
Master:0
P2
Branch
Intelli:1
Local:3
Selected Station Communication Status Monitor (LJ72GF15-T2)
Sta. No. 1 Error
Mode: Online
MAC Address:
Module Error...
RUN MODE SD ERR.
REM. D LINK RD L ERR.
PORT 2 Cable Disconnected...
Operation Test
Communication Test...
IP Communication Test...
Cable Test...
Link Start/Stop...
Information Confirmation/Setting
Reserved Station Function Enable...
Enable/Disable Ignore Station Errors...
Selected Station Operation
Remote Operation...
Close

Check the transient communication route from the connected station to the destination station.

Check the IP communication route from the connected station to the destination station.

Check the cable status between the connected station and the destination station.

Start or stop the network data link.

View reserved station numbers and temporarily enable reserved stations.

View station numbers set to ignore errors and temporarily ignore station errors.

CPU status of the selected station can be changed by starting remote operation of the selected station.

Various tests and operations can be performed.

■When a setting other than "No Specification" is specified in "Other Station Setting" on the "Specify Connection Destination Connection" window

1. Connect the engineering tool to the CPU module.

2. Start the CC-Link IE Field Network diagnostics.

🖱 [Diagnostics] ⇨ [CC-Link IE Field Diagnostics]

Point

The CC-Link IE Field Network diagnostics cannot be started when "Other Station (Co-existence Network)" has been specified in "Other Station Setting" on the "Specify Connection Destination Connection" window and "CC-Link" or "C24" has been specified in "Co-existence Network Route".

3. Select the master/local module of the network No. to be diagnosed and click the [OK] button to start the CC-Link IE Field Network diagnostics.

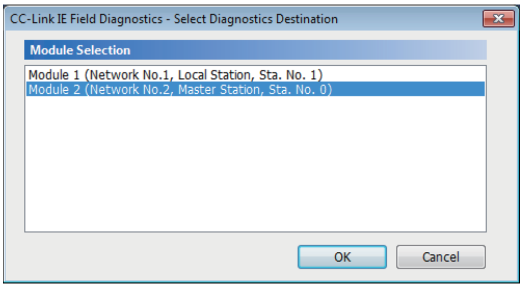
CC-Link IE Field Diagnostics - Select Diagnostics Destination
Module Selection
OK
Cancel

Module 1 (Network No.1, Local Station, Sta. No. 1)
Module 2 (Network No.2, Master Station, Sta. No. 0)

Point

- Although the CC-Link IE Field Network diagnostics of the network to which the relay sending station belongs can be started, that of the network to which the relay receiving station belongs cannot be started.
- To start the CC-Link IE Field Network diagnostics, specify the network No. and station No. of the relay receiving station or relay sending station for "Network No." and "Station No." in "Network Communication Route" on the "Specify Connection Destination Connection" window. For example, to start the CC-Link IE Field Network diagnostics of the network No. 2, specify the network No. 1 and station No. 3, or the network No. 2 and station No. 0 in "Network No." and "Station No.".

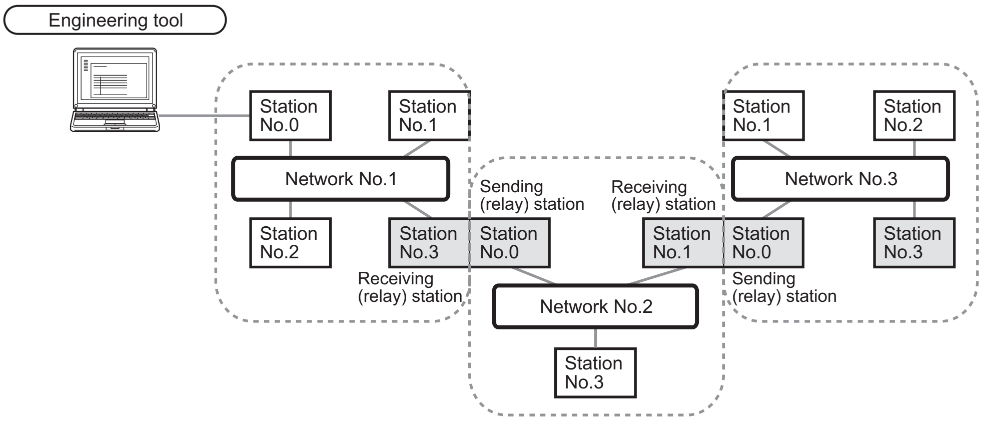
Engineering tool
Station No.0
Station No.1
Network No.1
Station No.2
Station No.3
Receiving (relay) station
Sending (relay) station
Station No.0
Receiving (relay) station
Station No.1
Network No.2
Station No.3
Station No.1
Station No.2
Network No.3
Station No.0
Sending (relay) station
Station No.3

- The CC-Link IE Field Network diagnostics can be started for stations of up to four networks ahead (number of relay stations: 3) including the station directly connected to the engineering tool.

4. Step 4 and later is the same procedure as when "No Specification" is specified in "Other Station Setting" on the "Specify Connection Destination Connection" window. (☞ Page 106 When "No Specification" is specified in "Other Station Setting" on the "Specify Connection Destination Connection" window)

Precautions

If the communication path includes the following items, the CC-Link IE Field Network diagnostics cannot be started.

- MELSECNET/H
- Multidrop connection with a serial communication module
- Interface board for a personal computer
- GOT (when the transparent function is used)
- MELSEC-Q/L series network module

Diagnostics window

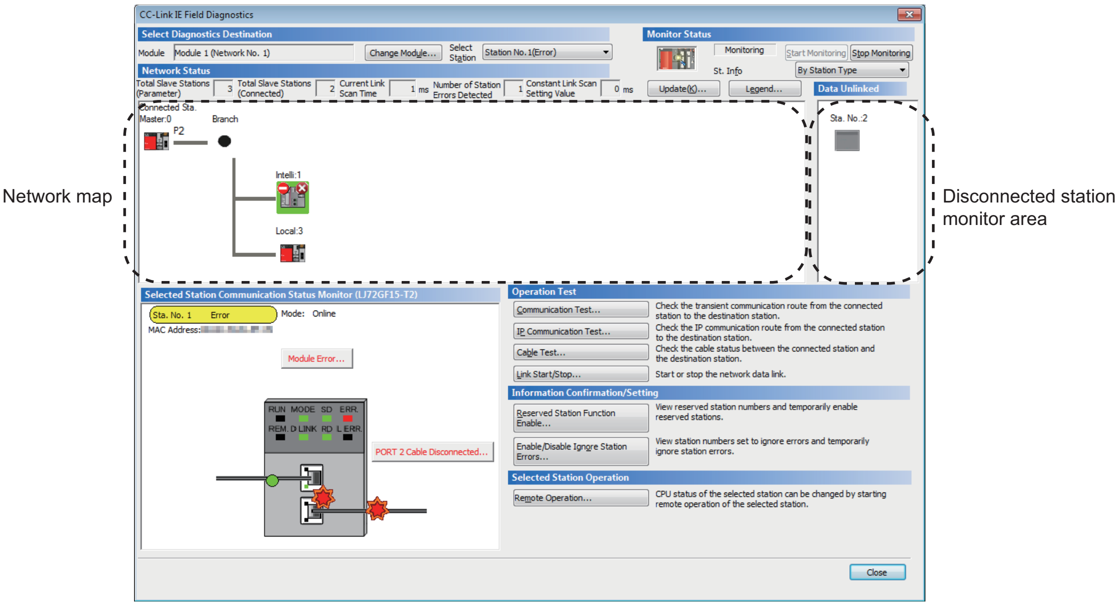

CC-Link IE Field Diagnostics

Select Diagnostics Destination

Module: Module 1 (Network No. 1) [Change Module...]

Select Station: Station No.1(Error)

Monitor Status

Monitoring [Start Monitoring] [Stop Monitoring]

St. Info: By Station Type

Network Status

Total Slave Stations (Parameter): 3

Total Slave Stations (Connected): 2

Current Link Scan Time: 1 ms

Number of Station Errors Detected: 1

Constant Link Scan Setting Value: 0 ms

[Update(K)...] [Legend...]

Data Unlinked

Selected Station Communication Status Monitor (LJ72GF15-T2)

Sta. No. 1 Error Mode: Online

MAC Address: [redacted]

[Module Error...]

[PORT 2 Cable Disconnected...]

Operation Test

[Communication Test...] Check the transient communication route from the connected station to the destination station.

[IP Communication Test...] Check the IP communication route from the connected station to the destination station.

[Cable Test...] Check the cable status between the connected station and the destination station.

[Link Start/Stop...] Start or stop the network data link.

Information Confirmation/Setting

[Reserved Station Function Enable...] View reserved station numbers and temporarily enable reserved stations.

[Enable/Disable Ignore Station Errors...] View station numbers set to ignore errors and temporarily ignore station errors.

Selected Station Operation

[Remote Operation...] CPU status of the selected station can be changed by starting remote operation of the selected station.

[Close]

Item		Description
Select Diagnostics Destination	Module	Displays the Simple Motion module being diagnosed.
	[Change Module] button	Allows to change the target module when multiple Simple Motion modules are mounted. However, when multiple Simple Motion modules of the same network No. are mounted on the same base unit, the module with the smallest start I/O No. is always diagnosed, regardless of setting.
	Select Station	Selects the station No. of the station to be diagnosed. A station to be diagnosed can also be selected by clicking the module icon displayed in the network map.
Monitor Status	[Start Monitoring] button	Starts monitoring of the CC-Link IE Field Network diagnostics.
	[Stop Monitoring] button	Stops monitoring of the CC-Link IE Field Network diagnostics.
[Update] button		• Executes the network map update to match them if the actual network configuration and network map of the diagnostic window are inconsistent. A data link error may momentarily occur in all the stations and outputs of the connected slave stations may turn off since all stations on the network will be reconnected when executing the network map update. Set output data if needed. (📖MELSEC iQ-R Ethernet/CC-Link IE User's Manual (Startup))
[Legend] button		Displays the meaning of icons displayed in the CC-Link IE Field Network diagnostics. 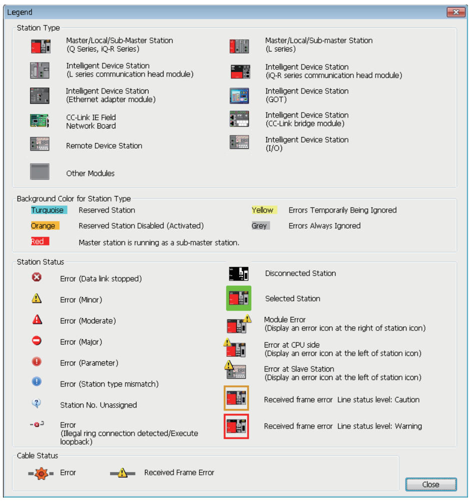 Legend Station Type Master/Local/Sub-Master Station (Q Series, iQ-R Series) Master/Local/Sub-master Station (L series) Intelligent Device Station (L series communication head module) Intelligent Device Station (iQ-R series communication head module) Intelligent Device Station (Ethernet adapter module) Intelligent Device Station (GOT) CC-Link IE Field Network Board Intelligent Device Station (CC-Link bridge module) Remote Device Station Intelligent Device Station (I/O) Other Modules Background Color for Station Type Turquoise: Reserved Station Yellow: Errors Temporarily Being Ignored Orange: Reserved Station Disabled (Activated) Grey: Errors Always Ignored Red: Master station is running as a sub-master station. Station Status Error (Data link stopped) Disconnected Station Error (Minor) Selected Station Error (Moderate) Module Error (Display an error icon at the right of station icon) Error (Major) Error at CPU side (Display an error icon at the left of station icon) Error (Parameter) Error at Slave Station (Display an error icon at the left of station icon) Error (Station type mismatch) Received frame error Line status level: Caution Station No. Unassigned Received frame error Line status level: Warning Error (Illegal ring connection detected/Execute loopback) Cable Status Error Received Frame Error [Close]
St. Info		The display name of the slave station can be selected from "By Device Name" and "By Station Type". When "By Device Name" is selected, the information entered in "Alias" of "Network Configuration Settings" under "Basic Settings" is displayed. When selecting "By Device Name", pay attention to the following. • When "Alias" is not entered in "Network Configuration Settings" under "Basic Settings", the station type is displayed.

Item		Description
Network Status	Total Slave Stations (Parameter)	Displays the total number of slave stations set in "Network Configuration Settings" of "Basic Settings".
	Total Slave Stations (Connected)	Displays the total number of slave stations actually performing baton pass on CC-Link IE Field Network.
	Current Link Scan Time	Displays the link scan time of the displayed network.
	Number of Station Errors Detected	Displays the number of error stations in the displayed network.
	Network map	Displays the network map and the status of each station. If the status is not displayed, check that there is only one master station in the system and no station No. is overlapped. For details on the network map, refer to the following. ☞ Page 111 Network map
	Disconnected station monitor area	Displays a disconnected station that has been set in "Network Configuration Settings" of "Basic Settings" but has not yet performed data link. However, even if a disconnected station had performed data link, it is displayed in this area in the following cases. • A station that was reconnected to a network after disconnecting/inserting the cable or powering off and on the system, and remains disconnected. • A disconnected station with the station icon deleted in the network map by clicking the [Update] button 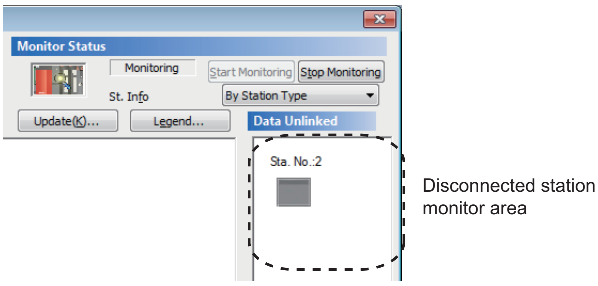 Monitor Status Monitoring Start Monitoring Stop Monitoring St. Info By Station Type Update(K)... Legend... Data Unlinked Sta. No.:2 Disconnected station monitor area The "Other Modules" icon indicates a station that has not yet performed data link. Icons other than "Other Modules" icon indicate stations that had performed data link before disconnection. For details on the displayed icon, click the [Legend] button.
Selected Station Communication Status Monitor		Displays status of the station selected in "Network Status". For details on "Selected Station Communication Status Monitor", refer to the following. ☞ Page 113 Selected Station Communication Status Monitor
Operation Test	[Communication Test] button	Performs a communication test. (☞ Page 37 Communication test)
	[IP Communication Test] button	Performs a IP communication test. (☞ Page 46 IP communication test)
	[Cable Test] button	Performs a cable test. (☞ Page 115 Cable Test)
	[Link Start/Stop] button	Starts or stops cyclic transmission. (☞ Page 116 Link Start/Stop)
Information Confirmation/ Setting	[Reserved Station Function Enable] button	Temporarily cancels a reservation for a slave station or reserves the slave station again. (☞ Page 118 Reserved Station Function Enable)
	[Enable/Disable Ignore Station Errors] button	Sets a slave station as a temporary error invalid station. (☞ Page 120 Enable/Disable Ignore Station Errors)
Selected Station Operation	[Remote Operation] button	Performs remote operations (such as RUN, STOP, or RESET operations) to the CPU module. (☞ Page 123 Remote Operation)

Network map

■Icon

The module type and station No. are displayed with an icon.

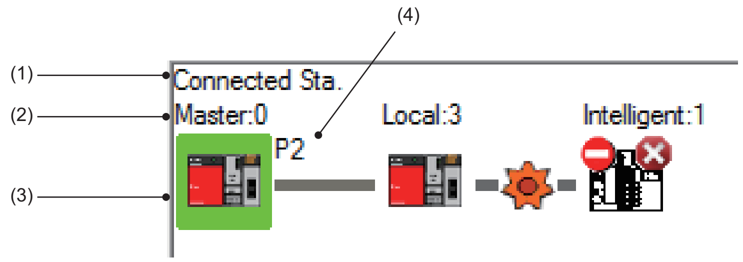

- Click: Selection
- Right-click: Test or debug execution.
- ↑ ↓ ← → keys on the keyboard: Move the focus to the module to be diagnosed, and determine it with the Space key.

No.	Description
(1)	Indicates the station (own station) where the engineering tool is connected.
(2)	Displays the station type and station No. "?" is displayed when a station No. has not been set. When the background of the text if colored, the relevant station may have been set as a reserved station or an error invalid station. Click the [Legend] button to check the meaning of the background colors.
(3)	Displays module status. Click the [Legend] button to check the meaning of the icon. When the "Error (Illegal ring connection detected/Execute loopback)" icon is displayed, take actions displayed in "Troubleshooting" of "Error Details". (☞ Page 113 When a station where an error has occurred is selected)
(4)	Displays a port to which an Ethernet cable is connected.

■Network map

A network map is displayed according to the connection status.

<table>
<tr><th>System configuration</th><th>Display of the network map</th></tr>
<tr><td>

Star topology

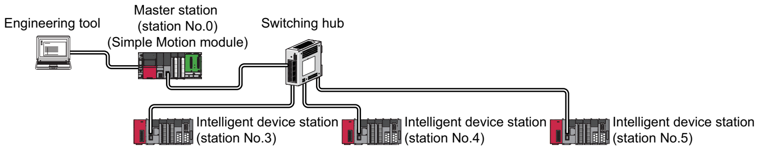
Engineering tool
Master station
(station No.0)
(Simple Motion module)
Switching hub
Intelligent device station
(station No.3)
Intelligent device station
(station No.4)
Intelligent device station
(station No.5)

</td><td>

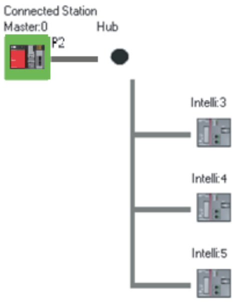
Connected Station
Master:0
Hub
P2
Intelli:3
Intelli:4
Intelli:5

</td></tr>
<tr><td>

Line topology

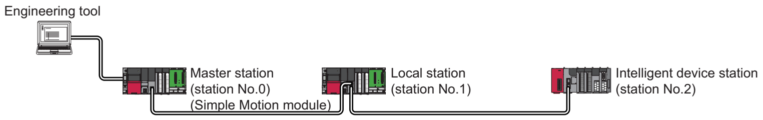
Engineering tool
Master station
(station No.0)
(Simple Motion module)
Local station
(station No.1)
Intelligent device station
(station No.2)

</td><td>

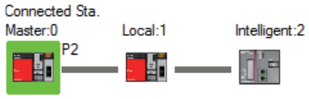
Connected Sta.
Master:0
Local:1
Intelligent:2
P2

</td></tr>
<tr><td>

Star and line mixed

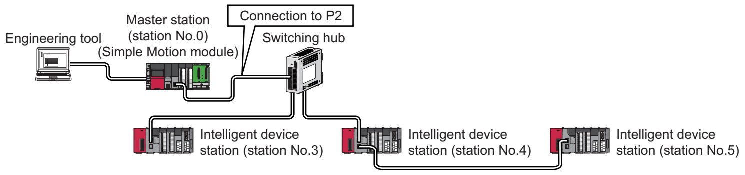
Master station
(station No.0)
(Simple Motion module)
Connection to P2
Engineering tool
Switching hub
Intelligent device
station (station No.3)
Intelligent device
station (station No.4)
Intelligent device
station (station No.5)

</td><td>

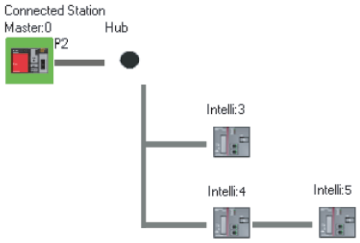
Connected Station
Master:0
Hub
P2
Intelli:3
Intelli:4
Intelli:5

</td></tr>
</table>

In the following cases, the network map that is different from the actual system configuration is displayed.

<table>
<tr><th>System configuration</th><th>Display of the network map</th></tr>
<tr><td>

Two stations are connected through a switching hub.

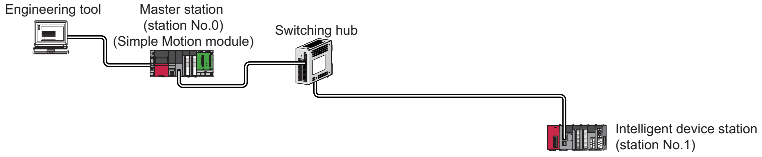
Engineering tool
Master station
(station No.0)
(Simple Motion module)
Switching hub
Intelligent device station
(station No.1)

</td><td>

Branches are not displayed in the network map.

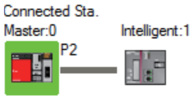
Connected Sta.
Master:0
Intelligent:1
P2

</td></tr>
<tr><td>

Switching hubs are in cascade connection.

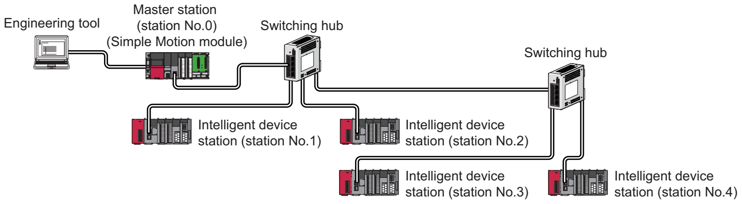
Engineering tool
Master station
(station No.0)
(Simple Motion module)
Switching hub
Switching hub
Intelligent device
station (station No.1)
Intelligent device
station (station No.2)
Intelligent device
station (station No.3)
Intelligent device
station (station No.4)

</td><td>

Only one branch is displayed.

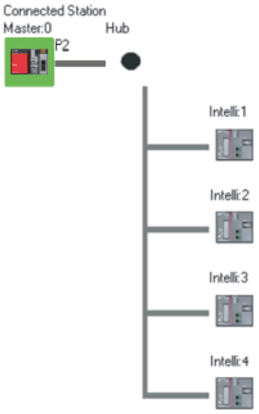
Connected Station
Master:0
Hub
P2
Intelli:1
Intelli:2
Intelli:3
Intelli:4

</td></tr>
</table>

Selected Station Communication Status Monitor

Displays status of the station selected in "Network Status".

■When a station where an error has occurred is selected

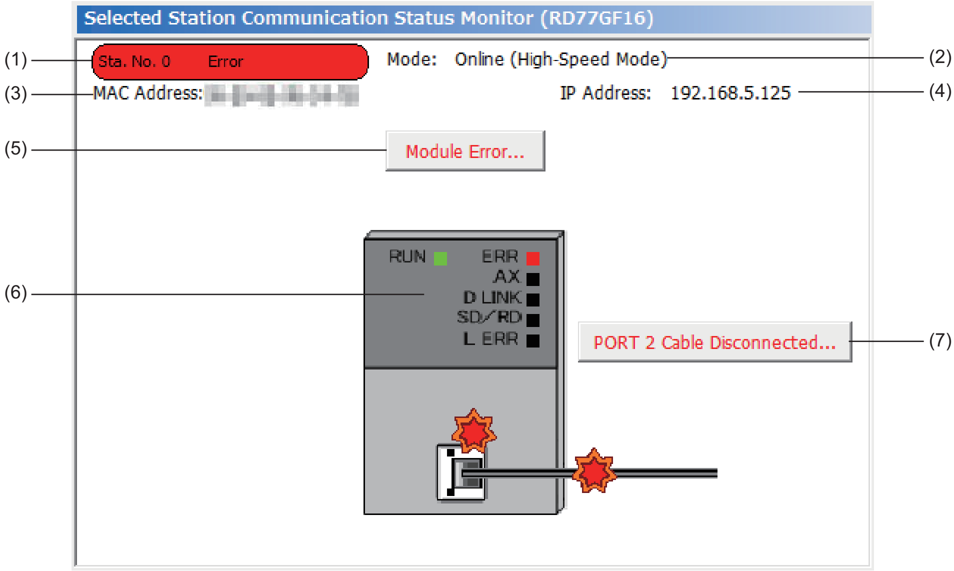

Selected Station Communication Status Monitor (RD77GF16)

Sta. No. 0 Error

Mode: Online (High-Speed Mode)

MAC Address: [redacted]

IP Address: 192.168.5.125

Module Error...

PORT 2 Cable Disconnected...

No.	Description
(1)	Indicates the operating status. • Station No._: Normal operation • Station No._ Error (yellow): Error (Data link is continued.) • Station No._ Error (red): Error (Data link is stopped.)
(2)	Displays a mode.
(3)	Displays a MAC address.
(4)	Displays an IP address (only when it is set).
(5)	Click this button to check error details. Take actions following the description displayed in "Error Factor" and "Troubleshooting".
(6)	Displays the LED status of a module and communication status. (📖MELSEC iQ-R Simple Motion Module User's Manual (Startup))
(7)	Displays status of the cables connected.

■When a station with no network No. nor station No. setting is selected

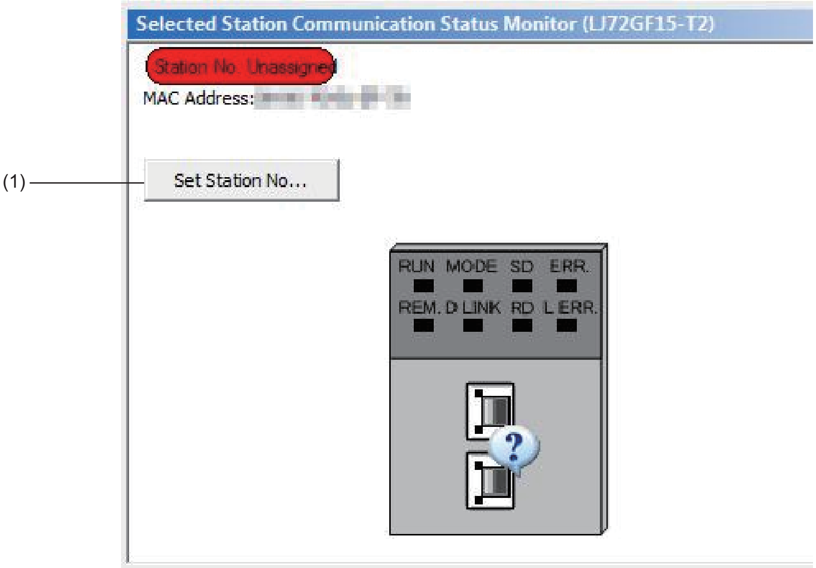

Selected Station Communication Status Monitor (LJ72GF15-T2)

Station No. Unassigned

MAC Address: [redacted]

No.	Description
(1)	Sets a station No. for a slave station to which a station No. has not been set. This button is displayed only when a slave station meeting all the following conditions has been selected in "Network Status". • The slave station supports station No. setting from the master station. • A station No. has not been set to the slave station.[1] When a station set in "Network Configuration Settings" of "Basic Settings" is added, the external device connected to the slave station outputs data input from the master station, simultaneously with configuration of the station No. setting. Therefore, set the CPU module to STOP or check that outputs from the external device will not cause a problem beforehand.

[1] For how to clear the station No. set for a slave station in the CC-Link IE Field Network diagnostics, refer to the manuals for modules used on slave stations.

■When a remote device station is selected

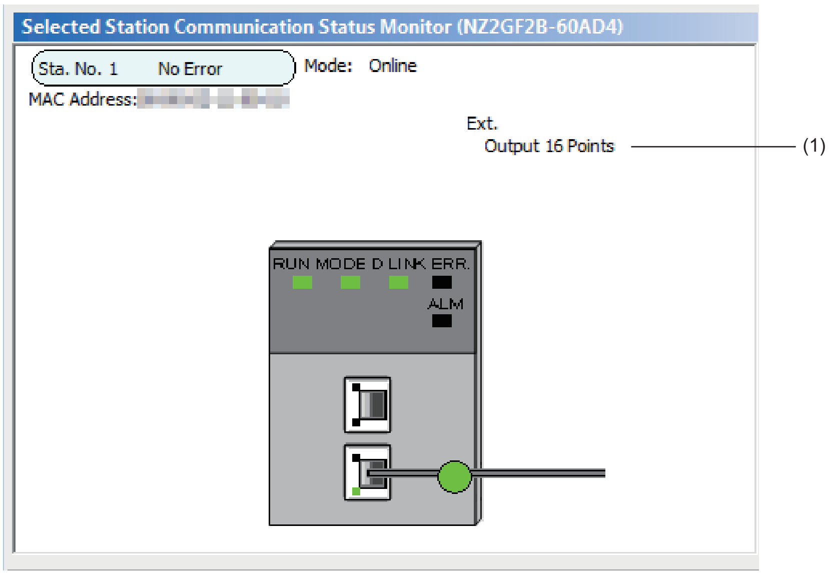

Selected Station Communication Status Monitor (NZ2GF2B-60AD4)

Sta. No. 1 No Error

Mode: Online

MAC Address: [redacted]

Ext.
Output 16 Points

No.	Description
(1)	Displays the information of the extension module connected to the remote device station.

■When the module that is not supported is connected

When the module that is not supported such as servo amplifier is connected, the status of the station is not displayed.

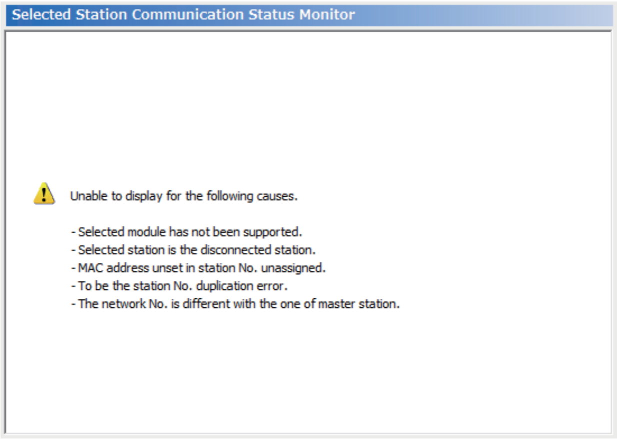

Selected Station Communication Status Monitor

Unable to display for the following causes.

- Selected module has not been supported.
- Selected station is the disconnected station.
- MAC address unset in station No. unassigned.
- To be the station No. duplication error.
- The network No. is different with the one of master station.

Cable Test

Cable test checks if the Ethernet cables are properly connected.

Only the Ethernet cable connected to the P2 of the target station is tested. For the whole network status, check the network map or "Selected Station Communication Status Monitor" of the CC-Link IE Field Network diagnostics. (☞ Page 104 Checking the Network Status)

■Procedure

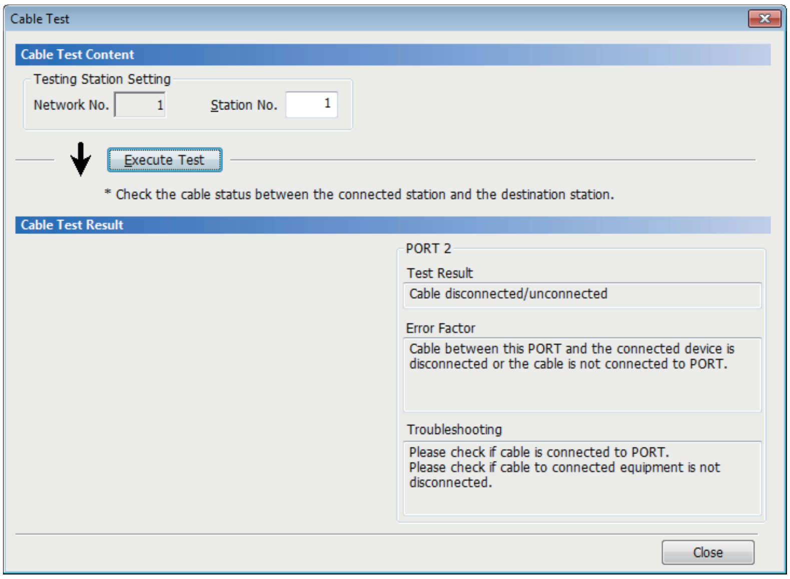

Network No. 1

Station No. 1

* Check the cable status between the connected station and the destination station.

PORT 2

Test Result: Cable disconnected/unconnected

Error Factor: Cable between this PORT and the connected device is disconnected or the cable is not connected to PORT.

Troubleshooting: Please check if cable is connected to PORT. Please check if cable to connected equipment is not disconnected.

1. Click the [Cable Test] button in the "CC-Link IE Field Diagnostics" window.

"Cable Test" window is displayed.

2. Enter a station No. and click the [Execute Test] button to operate the test.

If an error occurs, take actions according to the error message.

Link Start/Stop

This function stops the cyclic transmission during debugging and other operations. (Data reception from a slave station and data sending from the own station are stopped.)

Also, the stopped cyclic transmission is restarted. This function does not stop or restart transient transmission.

This function can stop and restart the cyclic transmission of an asynchronous communication device. It cannot stop or restart the cyclic transmission of a synchronous communication device. When link start/stop is executed for the synchronous communication device and the Simple Motion module, an error might occur in the slave station.

Point

Cyclic transmission can be started and stopped using link special relay (SB) and link special register (SW).
(☞ Page 142 List of Link Special Relay (SB), Page 151 List of Link Special Register (SW))

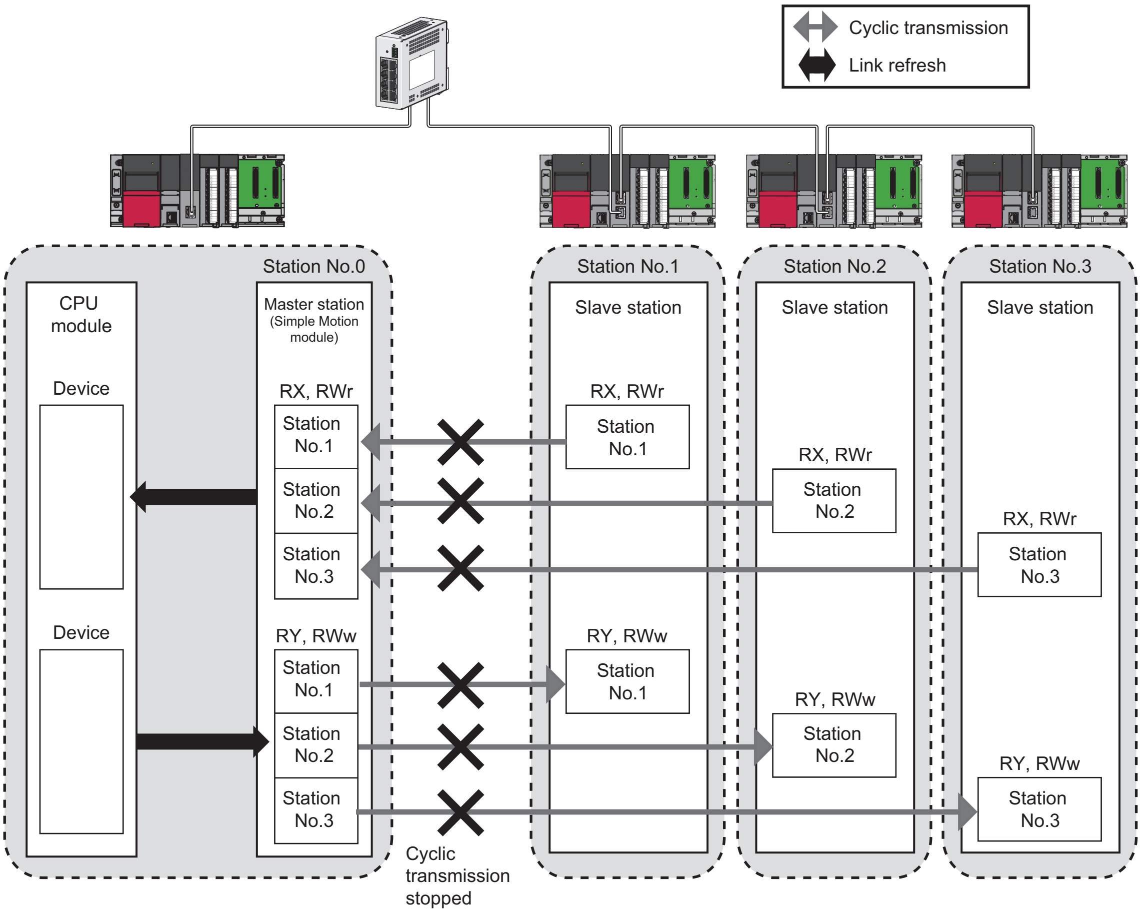
Cyclic transmission
Link refresh
Station No.0
CPU module
Device
Device
Master station (Simple Motion module)
RX, RWr
Station No.1
Station No.2
Station No.3
RY, RWw
Station No.1
Station No.2
Station No.3
Station No.1
Slave station
RX, RWr
Station No.1
RY, RWw
Station No.1
Station No.2
Slave station
RX, RWr
Station No.2
RY, RWw
Station No.2
Station No.3
Slave station
RX, RWr
Station No.3
RY, RWw
Station No.3
Cyclic transmission stopped

■Procedure

The execution status of cyclic transmission can be checked in "Link Status".

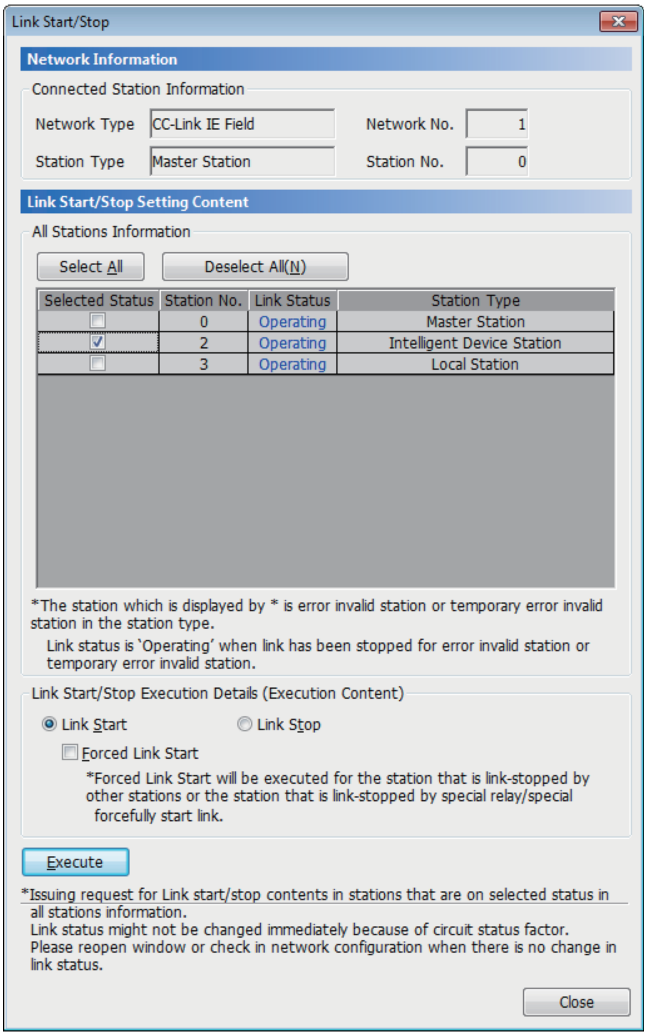

Connected Station Information

Network Type: CC-Link IE Field
Network No.: 1
Station Type: Master Station
Station No.: 0

All Stations Information

Selected Status	Station No.	Link Status	Station Type
☐	0	Operating	Master Station
☑	2	Operating	Intelligent Device Station
☐	3	Operating	Local Station

*The station which is displayed by * is error invalid station or temporary error invalid station in the station type.
Link status is 'Operating' when link has been stopped for error invalid station or temporary error invalid station.

Link Start/Stop Execution Details (Execution Content)

● Link Start ○ Link Stop

☐ Forced Link Start

*Forced Link Start will be executed for the station that is link-stopped by other stations or the station that is link-stopped by special relay/special forcefully start link.

*Issuing request for Link start/stop contents in stations that are on selected status in all stations information.
Link status might not be changed immediately because of circuit status factor.
Please reopen window or check in network configuration when there is no change in link status.

1. Click the [Link Start/Stop] button in the "CC-Link IE Field Diagnostics" window. Or right-click a module icon in "Network Status" and click [Link Start/Stop].

"Link Start/Stop" window is displayed.

2. Select a station for starting or stopping cyclic transmission in "Selected Status".

When the engineering tool is connected to a local station, only the own station can be selected. The station to which the engineering tool is connected can be checked in "Connected Station Information".

3. Select whether to start or stop cyclic transmission in "Link Start/Stop Execution Details (Execution Content)".

Selecting "Forced Link Start" will forcibly start cyclic transmission of the station where cyclic transmission was stopped by a command from another station or by link special relay (SB) or link special register (SW).

4. Click the [Execute] button.

■When the CPU module is reset or the system is powered off and on

Even if cyclic transmission has been stopped by this function, it will restart.

■When the link stop is executed to an error invalid station or temporary error invalid station

Note that the station is displayed as a station during data link in the CC-Link IE Field Network diagnostics window even after data link has been stopped. Check the data link status in "Data link error status of own station" (SB0049).

■When the safety communication function is used in a system using the Safety CPU

When the cyclic transmission with the remote device station (safety station) is stopped during safety communications with the remote device station (safety station), safety communications with the remote device station (safety station) where cyclic transmission was stopped is also stopped and an error will occur.

When the cyclic transmission of the master station (safety station) is stopped, safety communications with all the remote device stations (safety stations) is stopped and an error will occur.

■Stations to which the link start cannot be executed

The link start cannot be executed to the following stations.

- Station where cyclic transmission was stopped due to an error
- Station where link was stopped by a command from another station[1]
- Station where link was stopped by link special relay (SB) or link special register (SW)[1]

[1] Selecting "Forced Link Start" will start the link.

Reserved Station Function Enable

This function temporarily cancels a reservation for a slave station. Use this function to cancel the reservation of a slave station it is connected to the network.

Or use to set it as a reserved station again.

This function can temporarily cancel a reserved station of an asynchronous communication device. It cannot temporarily cancel a reserved station of a synchronous communication device. When temporarily cancel of a reserved station is executed for the synchronous communication device, an error might occur in the slave station.

Point

The reserved station setting can also be temporarily disabled/enabled using link special relay (SB) and link special register (SW) of the master station. (☞ Page 142 List of Link Special Relay (SB), Page 151 List of Link Special Register (SW))

■Selecting the target module in "Network Status"

To temporarily cancel a reservation, follow the steps below.

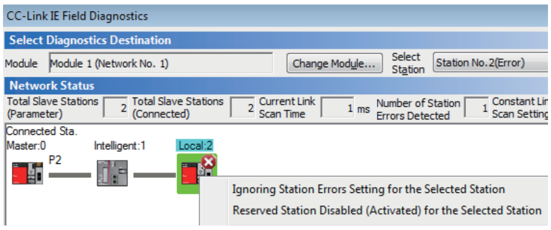
CC-Link IE Field Diagnostics
Select Diagnostics Destination
Module
Change Module...
Select Station
Network Status
Total Slave Stations (Parameter)
Total Slave Stations (Connected)
Current Link Scan Time
ms
Number of Station Errors Detected
Constant Link Scan Setting
Connected Sta.
Master:0
Intelligent:1
Local:2
P2
Ignoring Station Errors Setting for the Selected Station
Reserved Station Disabled (Activated) for the Selected Station

Module: Module 1 (Network No. 1)
Select Station: Station No.2(Error)
Total Slave Stations (Parameter): 2
Total Slave Stations (Connected): 2
Current Link Scan Time: 1 ms
Number of Station Errors Detected: 1

1. Connect a slave station specified as a reserved station to the network.

2. In "Network Status" of the "CC-Link IE Field Diagnostics" window, select the icon of the station for which reservation is to be temporarily canceled.

3. Right-click the selected icon, and select "Reserved Station Disabled (Activated) for the Selected Station".

The text background turns orange. The reservation for the slave station is temporarily canceled.

4. Debug the slave station that has been added.

To reserve the slave station again, follow the steps below.

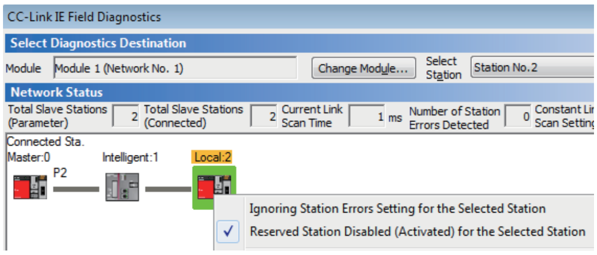
CC-Link IE Field Diagnostics
Select Diagnostics Destination
Module
Change Module...
Select Station
Network Status
Total Slave Stations (Parameter)
Total Slave Stations (Connected)
Current Link Scan Time
ms
Number of Station Errors Detected
Constant Link Scan Setting
Connected Sta.
Master:0
Intelligent:1
Local:2
P2
Ignoring Station Errors Setting for the Selected Station
✓ Reserved Station Disabled (Activated) for the Selected Station

Module: Module 1 (Network No. 1)
Select Station: Station No.2
Total Slave Stations (Parameter): 2
Total Slave Stations (Connected): 2
Current Link Scan Time: 1 ms
Number of Station Errors Detected: 0

1. In "Network Status" of the "CC-Link IE Field Diagnostics" window, select the icon of the station to be reserved again.

2. Right-click the selected icon, and select "Reserved Station Disabled (Activated) for the Selected Station".

The text background turns light blue. The slave station is reserved again.

■Selecting the target module in the "Reserved Station Function Enable" window

Reservation of multiple slave stations can be temporarily canceled through the "Reserved Station Function Enable" window all at once.

To temporarily cancel a reservation, follow the steps below.

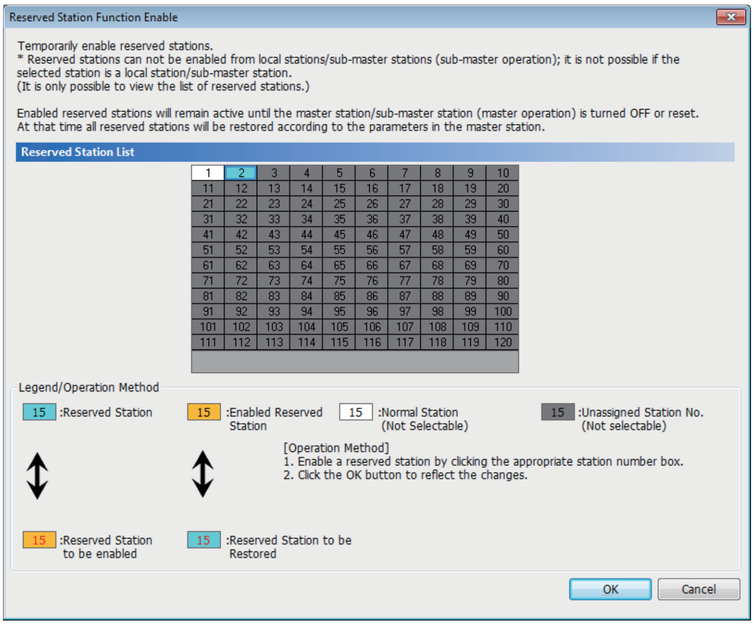

Reserved Station Function Enable

Temporarily enable reserved stations.
* Reserved stations can not be enabled from local stations/sub-master stations (sub-master operation); it is not possible if the selected station is a local station/sub-master station.
(It is only possible to view the list of reserved stations.)

Enabled reserved stations will remain active until the master station/sub-master station (master operation) is turned OFF or reset.
At that time all reserved stations will be restored according to the parameters in the master station.

Reserved Station List

1	2	3	4	5	6	7	8	9	10
11	12	13	14	15	16	17	18	19	20
21	22	23	24	25	26	27	28	29	30
31	32	33	34	35	36	37	38	39	40
41	42	43	44	45	46	47	48	49	50
51	52	53	54	55	56	57	58	59	60
61	62	63	64	65	66	67	68	69	70
71	72	73	74	75	76	77	78	79	80
81	82	83	84	85	86	87	88	89	90
91	92	93	94	95	96	97	98	99	100
101	102	103	104	105	106	107	108	109	110
111	112	113	114	115	116	117	118	119	120

Legend/Operation Method
15 :Reserved Station
15 :Enabled Reserved Station
15 :Normal Station (Not Selectable)
15 :Unassigned Station No. (Not selectable)
15 :Reserved Station to be enabled
15 :Reserved Station to be Restored
OK
Cancel

[Operation Method]
1. Enable a reserved station by clicking the appropriate station number box.
2. Click the OK button to reflect the changes.

1. Connect a slave station specified as a reserved station to the network.

2. Click the [Reserved Station Function Enable] button in the "CC-Link IE Field Diagnostics" window.

"Reserved Station Function Enable" window is displayed.

3. In "Reserved Station List", click the No. of the target station. The text turns red and the background turns orange.

Only reserved stations can be selected. The background of a reserved station No. is displayed in light blue.

4. Click the [OK] button to temporarily cancel the reservation.

5. Debug the slave station that has been added.

To reserve the slave station again, follow the steps below.

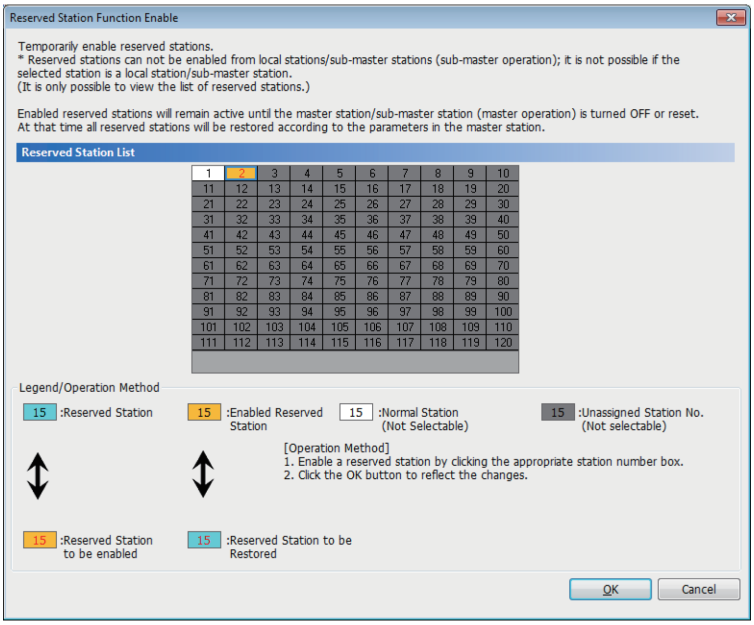

Reserved Station Function Enable

Temporarily enable reserved stations.
* Reserved stations can not be enabled from local stations/sub-master stations (sub-master operation); it is not possible if the selected station is a local station/sub-master station.
(It is only possible to view the list of reserved stations.)

Enabled reserved stations will remain active until the master station/sub-master station (master operation) is turned OFF or reset.
At that time all reserved stations will be restored according to the parameters in the master station.

Reserved Station List

[Operation Method]
1. Enable a reserved station by clicking the appropriate station number box.
2. Click the OK button to reflect the changes.

1. Open the "Reserved Station Function Enable" window in the same way as described in the procedure for temporarily canceling a reservation.

2. In "Reserved Station List", click the No. of the target station. The text turns red and the background turns light blue.

Only stations not specified as a reserved station can be selected.

The background of available modules is orange.

3. Click the [OK] button to set the station as a reserved station again.

■Parameter setting

"Network Configuration Settings" of "Basic Settings" does not reflect the temporary cancellation of reserved station specification.

■When the master station is reset or the system is powered off

The disabled reserved station setting is ignored, and the slave station returns to the status set in "Network Configuration Settings" of "Basic Settings" of the master station.

■When a station for which the reserved station setting has been temporarily disabled is disconnected from the network

The following status differs between the master station and local stations after the CPU module on the master station is reset or the system is powered off.

- ERR LED status
- SW00C0 to SW00C7 ("Reserved station setting status") and SW0180 to SW0187 ("Reserved station cancel setting status")

The difference can be corrected by the following procedure.

1. Reconnect the disconnected station.
2. Disable the reserved station setting, and enable the reserved station setting again.

■Checking the station No. of a reserved station

The station No. of a reserved station can be checked in the "Reserved Station Function Enable" window.

Enable/Disable Ignore Station Errors

A slave station not set as an error invalid station can be temporarily set as an error invalid station. This function is used to temporarily prevent detection of an error in a slave station.

This function also cancels temporary error invalid station setting configured to a slave station.

Point

The temporary error invalid station setting can also be configured/canceled using link special relay (SB) and link special register (SW) of the master station. (☞ Page 142 List of Link Special Relay (SB), Page 151 List of Link Special Register (SW))

■Selecting the target module in "Network Status"

To set a temporary error invalid station, follow the steps below.

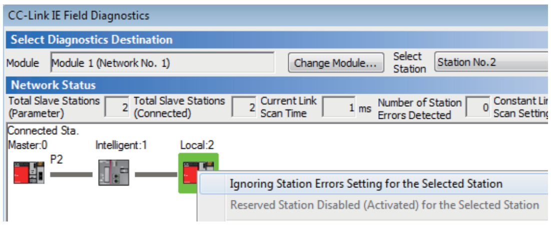

Module: Module 1 (Network No. 1)

Select Station: Station No.2

Total Slave Stations (Parameter): 2

Total Slave Stations (Connected): 2

Current Link Scan Time: 1 ms

Number of Station Errors Detected: 0

CC-Link IE Field Diagnostics
Select Diagnostics Destination
Change Module...
Network Status
Constant Link Scan Setting
Connected Sta.
Master:0
Intelligent:1
Local:2
P2
Ignoring Station Errors Setting for the Selected Station
Reserved Station Disabled (Activated) for the Selected Station

1. In "Network Status" of the "CC-Link IE Field Diagnostics" window, select the icon of the station to be temporarily set as an error invalid station.
2. Right-click the selected icon, and select "Ignoring Station Errors Setting for the Selected Station".

The text background turns yellow. The target station is temporarily set as an error invalid station.

To cancel temporary error invalid station setting, follow the steps below.

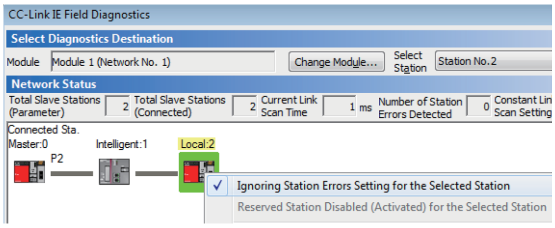

Module: Module 1 (Network No. 1)

Select Station: Station No.2

Total Slave Stations (Parameter): 2

Total Slave Stations (Connected): 2

Current Link Scan Time: 1 ms

Number of Station Errors Detected: 0

CC-Link IE Field Diagnostics
Select Diagnostics Destination
Change Module...
Network Status
Constant Link Scan Setting
Connected Sta.
Master:0
Intelligent:1
Local:2
P2
✓ Ignoring Station Errors Setting for the Selected Station
Reserved Station Disabled (Activated) for the Selected Station

1. In "Network Status" of the "CC-Link IE Field Diagnostics" window, select the icon of the station for which temporary error invalid station setting is to be canceled.
2. Right-click the selected icon, and select "Ignoring Station Errors Setting for the Selected Station".

The text background turns white. The temporary error invalid station setting is canceled.

■Selecting the target module in the "Enable/Disable Ignore Station Errors" window

Temporary error invalid station setting can be configured to multiple slave stations through the "Enable/Disable Ignore Station Errors" window all at once.

To set a temporary error invalid station, follow the steps below.

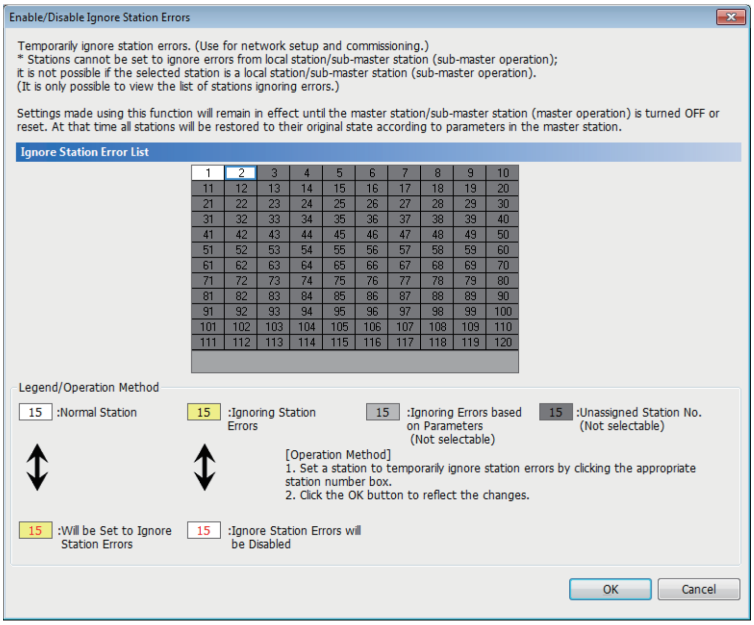

Enable/Disable Ignore Station Errors

Temporarily ignore station errors. (Use for network setup and commissioning.)
* Stations cannot be set to ignore errors from local station/sub-master station (sub-master operation);
it is not possible if the selected station is a local station/sub-master station (sub-master operation).
(It is only possible to view the list of stations ignoring errors.)

Settings made using this function will remain in effect until the master station/sub-master station (master operation) is turned OFF or reset. At that time all stations will be restored to their original state according to parameters in the master station.

Ignore Station Error List

1	2	3	4	5	6	7	8	9	10
11	12	13	14	15	16	17	18	19	20
21	22	23	24	25	26	27	28	29	30
31	32	33	34	35	36	37	38	39	40
41	42	43	44	45	46	47	48	49	50
51	52	53	54	55	56	57	58	59	60
61	62	63	64	65	66	67	68	69	70
71	72	73	74	75	76	77	78	79	80
81	82	83	84	85	86	87	88	89	90
91	92	93	94	95	96	97	98	99	100
101	102	103	104	105	106	107	108	109	110
111	112	113	114	115	116	117	118	119	120

Legend/Operation Method

15 :Normal Station
15 :Ignoring Station Errors
15 :Ignoring Errors based on Parameters (Not selectable)
15 :Unassigned Station No. (Not selectable)
15 :Will be Set to Ignore Station Errors
15 :Ignore Station Errors will be Disabled

[Operation Method]
1. Set a station to temporarily ignore station errors by clicking the appropriate station number box.
2. Click the OK button to reflect the changes.

1. Click the [Enable/Disable Ignore Station Errors] button in the "CC-Link IE Field Diagnostics" window.

"Enable/Disable Ignore Station Errors" window is displayed.

2. In "Ignore Station Error List", click the No. of the target station. The text turns red and the background turns yellow.

Only stations for which temporary error invalid station setting has not been configured can be selected. The background of available modules is white.

3. Click the [OK] button to temporarily set the station as an error invalid station.

To cancel temporary error invalid station setting, follow the steps below.

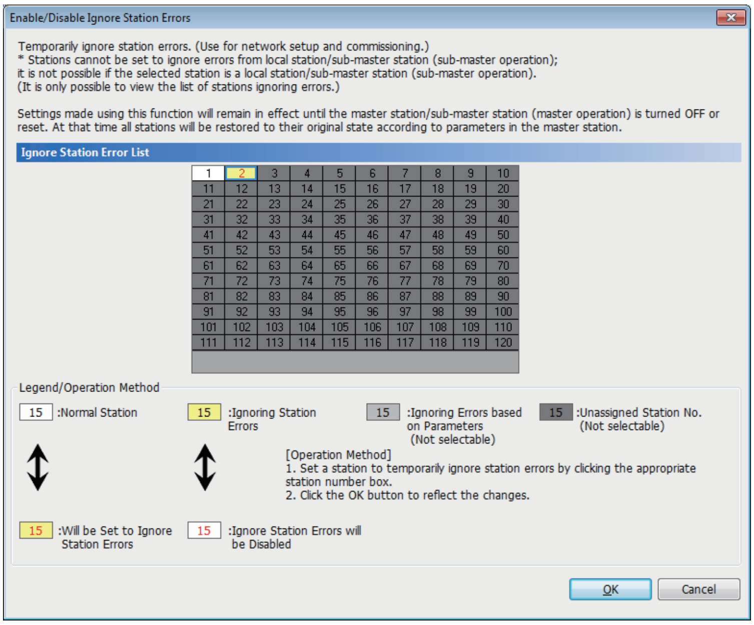

Enable/Disable Ignore Station Errors

Temporarily ignore station errors. (Use for network setup and commissioning.)
* Stations cannot be set to ignore errors from local station/sub-master station (sub-master operation);
it is not possible if the selected station is a local station/sub-master station (sub-master operation).
(It is only possible to view the list of stations ignoring errors.)

Settings made using this function will remain in effect until the master station/sub-master station (master operation) is turned OFF or reset. At that time all stations will be restored to their original state according to parameters in the master station.

Ignore Station Error List

1	2	3	4	5	6	7	8	9	10
11	12	13	14	15	16	17	18	19	20
21	22	23	24	25	26	27	28	29	30
31	32	33	34	35	36	37	38	39	40
41	42	43	44	45	46	47	48	49	50
51	52	53	54	55	56	57	58	59	60
61	62	63	64	65	66	67	68	69	70
71	72	73	74	75	76	77	78	79	80
81	82	83	84	85	86	87	88	89	90
91	92	93	94	95	96	97	98	99	100
101	102	103	104	105	106	107	108	109	110
111	112	113	114	115	116	117	118	119	120

Legend/Operation Method

15 :Normal Station
15 :Ignoring Station Errors
15 :Ignoring Errors based on Parameters (Not selectable)
15 :Unassigned Station No. (Not selectable)
15 :Will be Set to Ignore Station Errors
15 :Ignore Station Errors will be Disabled

[Operation Method]
1. Set a station to temporarily ignore station errors by clicking the appropriate station number box.
2. Click the OK button to reflect the changes.

1. Open the "Enable/Disable Ignore Station Errors" window in the same way as described in the procedure for setting a temporary error invalid station.

2. In "Ignore Station Error List", click the No. of the target station. The text turns red and the background turns white.

Only temporary error invalid stations can be selected. The background of a temporary error invalid station No. is displayed in yellow.

3. Click the [OK] button to cancel temporary error invalid station setting.

■Stations which cannot be set as a temporary error invalid station

The temporary error invalid station setting is not available for the following station.

- A slave station for which the reserved station setting is temporarily canceled

■Setting a temporary error invalid station in line topology

In the following case, even if a data link error occurs in the station set as an error invalid station, the station is not detected as a data link faulty station. However, subsequently connected stations are detected as data link faulty stations.

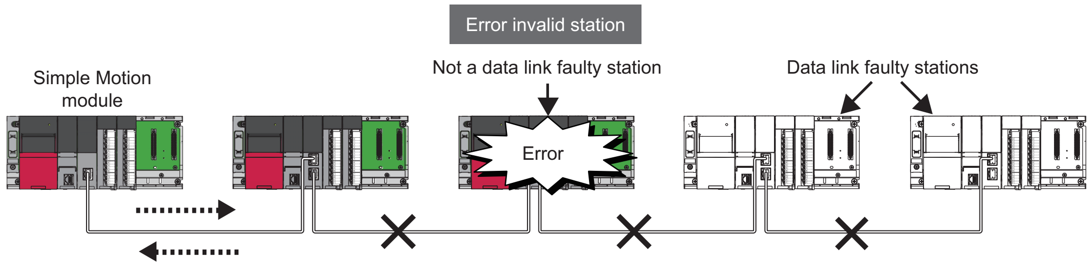

■Parameter setting

"Network Configuration Settings" of "Basic Settings" does not reflect temporary error invalid station setting.

■When the master station is reset or the system is powered off

The temporary error invalid station setting is ignored, and the slave station returns to the status set in "Network Configuration Settings" of "Basic Settings of the master station.

■When a temporary error invalid station is disconnected from the network

The following status differs between the master station and local stations after the CPU module on the master station is reset or the system is powered off.

- ERR LED status
- "Temporary error invalid station setting status" (SW00E0 to SW00E7)

The difference can be corrected by the following procedure.

1. Reconnect the disconnected station.
2. Configure the temporary error invalid station setting, and cancel the setting.

■Checking the station No. of an error invalid station

The station No. of an error invalid station can be checked in the "Enable/Disable Ignore Station Errors" window.

Remote Operation

This function executes remote operations (such as RUN, STOP, and RESET operations) to the station selected on the "CC-Link IE Field Diagnostics" window, from the engineering tool.

The displayed window varies depending on the station selected. For the operations with a module other than a Simple Motion module selected, refer to the manual for the module used.

■Procedure

To perform remote operations, follow the steps below.

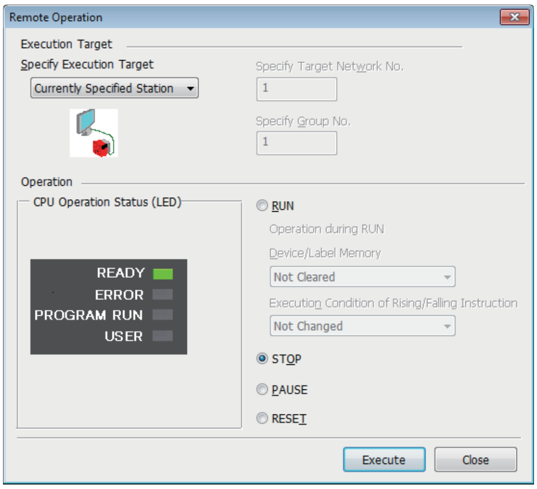
Remote Operation
Execution Target
Operation
CPU Operation Status (LED)
READY
ERROR
PROGRAM RUN
USER
Execute
Close

Specify Execution Target: Currently Specified Station
Specify Target Network No.: 1
Specify Group No.: 1
○ RUN
Operation during RUN
Device/Label Memory: Not Cleared
Execution Condition of Rising/Falling Instruction: Not Changed
● STOP
○ PAUSE
○ RESET

1. Select the module where the remote operations are performed in the CC-Link IE Field Network diagnostics.
2. Click the [Remote Operation] button in the "CC-Link IE Field Diagnostics" window. Or right-click a module icon in the "Network Status" and click [Remote Operation].

"Remote Operation" window is displayed.

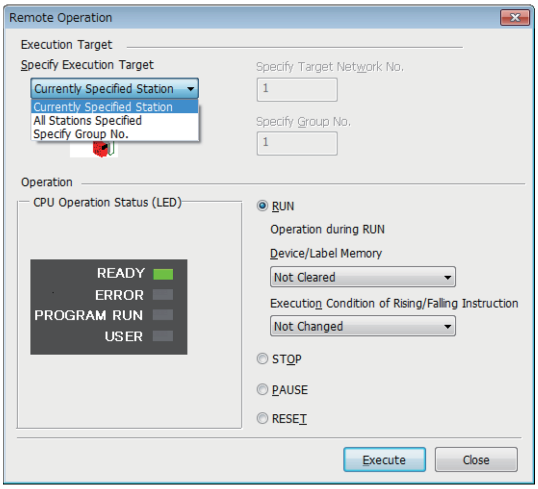
Remote Operation
Execution Target
Currently Specified Station
All Stations Specified
Specify Group No.
Operation
CPU Operation Status (LED)
READY
ERROR
PROGRAM RUN
USER
Execute
Close

Specify Execution Target: Currently Specified Station
Specify Target Network No.: 1
Specify Group No.: 1
● RUN
Operation during RUN
Device/Label Memory: Not Cleared
Execution Condition of Rising/Falling Instruction: Not Changed
○ STOP
○ PAUSE
○ RESET

3. Specify the target station in "Specify Execution Target".
   - "Currently Specified Station": The remote operations are performed only to the CPU module on the station selected in the CC-Link IE Field Network diagnostics.
   - "Specify Group No.": When the target station is on CC-Link IE Field Network, remote operations cannot be performed by selecting this item. If performed, an error will occur.
   - "All Stations Specified": The remote operations are performed on all stations on the network selected under "Specify Execution Target".
4. Select a remote operation (RUN, STOP, PAUSE, or RESET) to be performed in "Operation".[*1]
5. Click the [Execute] button to perform the remote operation.

[*1] To perform remote RESET, preset "Remote Reset Setting" under "Operation Related Setting" of "CPU Parameter" to "Enable".

Point

For details on the remote operations, refer to user's manual for the CPU module used.

4.4 Troubleshooting by Symptom

This section describes troubleshooting method by symptom. Perform these troubleshooting if data link cannot be performed even though no error is detected in the Simple Motion module. If an error has occurred in the Simple Motion module, identify the error cause using the engineering tool. (☞ Page 104 Checking the Network Status)

When cyclic transmission cannot be performed

The following lists the actions to be taken if cyclic transmission cannot be performed.

Check item	Action
Is the D LINK LED of the master or slave station turned off or flashing?	Perform troubleshooting for when the D LINK LED turns off or is flashing. (☞ Page 100 When the D LINK LED turns off or is flashing)
Is a slave station specified as a reserved station in "Network Configuration Settings" of "Basic Settings" of the master station?	Cancel the reserved station setting. (☞ Page 66 Network Configuration Settings)
Is "RX/RY Setting" or "RWw/RWr Setting" for slave stations configured in "Network Configuration Settings" under "Basic Settings" of the master station?	Set RX/RY or RWw/RWr range for each slave station. (☞ Page 69 Refresh Settings)
Do the station Nos. set in "Network Configuration Settings" under "Basic Settings" of the master station match those set for corresponding slave stations?	Correct station Nos.
Do the station types set in the network configuration settings of the master station match those set for the connected slave stations?	Correct the station type set in "Network Configuration Settings" under "Basic Settings" of the master station.
Is the range set in "Refresh Settings" of "Basic Settings" correct?	Correct the range setting in "Refresh Settings" of "Basic Settings". (☞ Page 69 Refresh Settings)
Is any refresh target device in "Refresh Settings" of "Basic Settings" overlapped with that of another network module?	Correct the range setting in "Refresh Settings" of "Basic Settings". (☞ Page 69 Refresh Settings)
Are the transfer ranges set in "Interlink Transmission Settings" of "Application Settings" correct?	Correct the transfer ranges set in "Interlink Transmission Settings" of "Application Settings". (☞ Page 76 Interlink Transmission Settings)
Are the source and destination modules set in "Interlink Transmission Settings" of "Application Settings" correct?	Correct the source and destination modules set in "Interlink Transmission Settings" of "Application Settings". (☞ Page 76 Interlink Transmission Settings)
Is the station No. of the Simple Motion module duplicated with any of the other stations?	Change the duplicated station No.

When transient transmission cannot be performed

The following lists the actions to be taken if transient transmission cannot be performed with the target station, and the engineering tool cannot perform monitoring.

Check item	Action
Is the D LINK LED of the master or slave station turned off?	Perform troubleshooting for when the D LINK LED turns off or is flashing. (☞ Page 100 When the D LINK LED turns off or is flashing)
Is the baton pass status of the destination normal?	In the CC-Link IE Field Network diagnostics, identify the cause of the error and take action. (☞ Page 104 Checking the Network Status)
Are the following control data of the dedicated instruction correct? • CPU type of the target module • Target network No. • Target station No.	Correct the control data of the dedicated instruction.
Is the station No. of the Simple Motion module duplicated with any of the other stations?	Change the duplicated station No.
Is the network No. duplicated on the network?	Change the duplicated network No.
Is a communication path by the dynamic routing function is determined?	• Power on the system and start transient transmission after a while. • When "Dynamic Routing" under "Application Settings" of the station on the communication path is set to "Disable", change it to "Enable".
Does the relay station to be passed support the dynamic routing function?	If the relay station to be passed does not support the dynamic routing function, set all the stations on the communication path in "Routing Setting" of "CPU Parameter".
Are multiple link dedicated instructions with same channel setting executed simultaneously?	• Set different channel to each instructions. • Shift the execution timing of the link dedicated instructions.

If the above actions do not solve the problem, perform the following tests to check for an error.

- Communication Test (☞ Page 37 Communication test)

When a station is disconnected from the network

The following is the action to be taken when a station in data link is disconnected.

Check item	Action
Is the ambient temperature for the module within the specified range?	Keep the ambient temperature within the specified range by taking action such as removing heat source.

If the above actions do not solve the problem, perform the following tests to check for an error.

- Cable test (☞ Page 115 Cable Test)

When a station is repeatedly disconnected and reconnected

The following lists the actions to be taken when a station in data link is repeatedly disconnected and reconnected.

Check item	Action
Are 1000BASE-T-compliant Ethernet cables used?	Replace the cables with 1000BASE-T-compliant Ethernet cables. (📖MELSEC iQ-R Simple Motion Module User's Manual (Startup))
Is the station-to-station distance 100 m or less?	Change the station-to-station distance to 100 m or less.
Does the cabling condition (bending radius) meet the specifications?	Refer to the manual for the Ethernet cable, and correct the bending radius.
Is any Ethernet cable disconnected?	Replace the Ethernet cable.
Is the switching hub used operating normally?	• Check if a 1000BASE-T-compliant switching hub is used. (📖MELSEC iQ-R Simple Motion Module User's Manual (Startup)) • Power off and on the switching hub.

If the above actions do not solve the problem, perform the following tests to check for an error.

- Cable test (☞ Page 115 Cable Test)

When communication is unstable

The following lists the actions to be taken when link scan time or transmission delay time is long or when a transient transmission timeout occurred.

Check item	Action
Is the L ERR LED of the master or slave station on?	Perform troubleshooting for when the L ERR LED turns on. (☞ Page 100 When the L ERR LED turns on)
Is the ambient temperature for the module within the specified range?	Keep the ambient temperature within the specified range by taking action such as removing heat source.
Is any error shown in "Selected Station Communication Status Monitor" of CC-Link IE Field Network diagnostics?	If an error is identified at P2, perform a cable test.
Is there any noise affecting the system?	Check the wiring condition.

If the above actions do not solve the problem, perform the following tests to check for an error.

- Cable test (☞ Page 115 Cable Test)

When IP communications cannot be performed using the IP packet transfer function

Before troubleshooting the problem as listed below, perform the IP communication test and take actions according to the error code. (☞ Page 46 IP communication test)

If the problem cannot be solved using the IP communication test, take actions listed below.

Check item	Action
Is the IP address of the connected Ethernet device correct?	Set an IP address meeting the IP address setting rules. (☞ Page 42 Rules for the IP address setting)
Is the IP address already in use?	• For the Ethernet device, set the IP address different from that of other devices on the network, such as a Ethernet-equipped module, master/local module, Simple Motion module, and Ethernet adapter module. • Disconnect the Ethernet device from the line and execute the Ping command to the IP address of the disconnected Ethernet device. If a response is received even though the device is disconnected, the IP address is already in use. Change the IP address.
Has a communication time over error occurred in the IP communication test?	• When "Dynamic Routing" under "Application Settings" is set to "Disable", correct the relay station network No. in "Routing Setting" of "CPU Parameter". • When "Dynamic Routing" under "Application Settings" is set to "Enable", check "Communication path determination status" (Un\G24480 to Un\G24495) to check that the communication path to the transfer destination network No. which is set in the third octet of the Ethernet device IP address is determined.
Have the routing parameters correctly been set? (Only when "Dynamic Routing" under "Application Settings" is set to "Disable")	• Correct "Routing Settings" of "CPU Parameter". • When the first and second octets of the IP address are the same for the request source device, request destination device, and modules between them, set the routing parameters so that the third octet of the IP address of the Ethernet device is used as the target station network No.
Is the network No. of the Ethernet device side (the third octet of the IP address) the same as that of modules and another Ethernet device? (This applies only when the request source external device, request destination external device, and modules between them have the same first and second octets of the IP address.)	Change the network No. of the Ethernet device side (the third octet of the IP address) to the one different from that of modules and another Ethernet device. 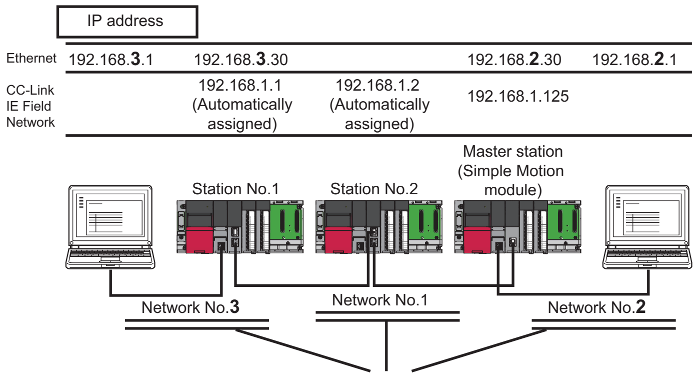 IP address Ethernet 192.168.3.1 192.168.3.30 192.168.2.30 192.168.2.1 CC-Link IE Field Network 192.168.1.1 (Automatically assigned) 192.168.1.2 (Automatically assigned) 192.168.1.125 Master station (Simple Motion module) Station No.1 Station No.2 Network No.3 Network No.1 Network No.2 Change the network Nos. to those not used for other stations.
Is the CC-Link IE Field Network gateway setting correct? (This applies only when the request source device, request destination device, and modules between them do not have the same first and second octets of the IP address.)	• Check and correct the setting in the module compatible with the CC-Link IE Field Network gateway setting. (📖Manual for the module compatible with the CC-Link IE Field Network gateway setting used) • When "Dynamic Routing" under "Application Settings" is set to "Disable", set the communication path to the CC-Link IE Field Network gateway setting station in "Routing Setting" of "CPU Parameter". • When "Dynamic Routing" under "Application Settings" is set to "Enable", check "Communication path determination status" (Un\G24480 to Un\G24495) to check that the communication path to the transfer destination network No. which is set in the third octet of the Ethernet device IP address is determined.
Are settings configured in modules connected to the Ethernet device correct? • First and second octets of the IP address • Subnet mask pattern • Default router IP address	Check and correct the setting in the module connected to the Ethernet device.
Is the firewall or proxy server setting enabled on the Ethernet device?	Check and correct the settings on the Ethernet device. Is a response to the Ping command (ICMP echo request) enabled?
Is the antivirus software on the Ethernet device blocking the communication?	Check and correct the antivirus software settings on the Ethernet device. • Is the security setting level of the antivirus software low? • Is a response to the Ping command (ICMP echo request) enabled in the firewall settings?

Check item	Action
When the Ethernet device has two or more Ethernet ports, have different default gateway settings been configured for each Ethernet port?	• Set the same IP address in the default gateway of each Ethernet port. • Set the communication route on the Ethernet device side using the route command so that communications using the IP packet transfer function can be transmitted to the Ethernet device through the module connected to the Ethernet device. (This applies only to Ethernet devices that have the route command, such as Microsoft® Windows®.) When the gateway setting is completed, execute the Ping command from the Ethernet device to check whether communications can be performed.
Is the switching hub used operating normally?	• If an error has occurred in the switching hub, eliminate the error cause. • If communications cannot be performed although no error has occurred in the switching hub, replace the switching hub.[*1]
Has any device on the line, such as an Ethernet device, Ethernet-equipped module, Ethernet adapter module, and switching hub, been replaced? (This applies only when the device has been replaced by the one having the same IP address.)	Reset the device on the line.[*2]

*1 When the device has been reconnected to the switching hub, or the switching hub has been replaced, it may take some time to read the MAC address. If so, retry communication from the Ethernet device again after a while or power on the switching hub again.

*2 A device on Ethernet has a table of IP addresses and their corresponding MAC address, called "ARP cache". When a device on the line is replaced by the one having the same IP address, the MAC address in the ARP cache is different from that of the replaced device; therefore, communications may not be normally performed. The "ARP cache" is updated by resetting the device or after a while. The time varies depending on the device.

If the above actions do not solve the problem, perform the following tests to check for an error.

- Cable test (☞ Page 115 Cable Test)

Safety communications cannot be performed

The following lists the actions to be taken if safety communications cannot be performed.

Check item	Action
Is a slave station (safety station) specified as a reserved station in "Network Configuration Settings" of "Basic Settings" of the master station?	Cancel the setting of the reserved station (safety station). (☞ Page 66 Network Configuration Settings)
Do the station No., station type, and model name of communication destination set in "Safety Communication Setting" under "Application Settings" match those set in "Network Configuration Settings" under "Basic Settings" of the master station?	In "Safety Communication Setting" under "Application Settings", set the station No., station type, and model name set in "Network Configuration Settings" under "Basic Settings" of the master station.
Is safety connection set among safety stations that perform safety communication?	Set safety connection among safety stations that perform safety communications in "Safety Communication Setting" under "Application Settings".
Is the same open method set among safety stations that perform safety communication?	Set one of the safety stations "Active" and the other "Passive" in "Safety Communication Setting" under "Application Settings".
Is the setting value of "Sending Interval Monitoring Time" in "Safety Communication Setting" under "Application Settings" correct?	Correct the setting value of "Sending Interval Monitoring Time" in "Safety Communication Setting" under "Application Settings". (☞ Page 174 Transmission interval monitoring time)
Is the setting value of "Safety Refresh Monitoring Time" in "Safety Communication Setting" under "Application Settings" correct?	Correct the setting value of "Safety Refresh Monitoring Time" in "Safety Communication Setting" under "Application Settings". (☞ Page 175 Safety refresh monitoring time)
Does safety station interlock status indicate interlock state?	• Correct the setting value of "Sending Interval Monitoring Time" in "Safety Communication Setting" under "Application Settings". (☞ Page 174 Transmission interval monitoring time) • Correct the setting value of "Safety Refresh Monitoring Time" in "Safety Communication Setting" under "Application Settings". (☞ Page 175 Safety refresh monitoring time) • Release the interlock state by using interlock release request for each safety connection. (🕮MELSEC iQ-R CPU Module User's Manual (Application))
Is a standard station set for the station No. of the communication destination in "Safety Communication Setting" under "Application Settings"?	Set a safety station for the station No. of the communication destination in "Safety Communication Setting" under "Application Settings".
Is "Safety Data Transfer Device Setting" in "Safety Communication Setting" under "Application Settings" correctly set?	Correct "Safety Data Transfer Device Setting" set in "Safety Communication Setting" under "Application Settings" among safety stations that perform safety communication.
When safety communications are performed with the remote device station (safety station), is "RWw/RWr Setting" set to 15 points or less in "Network Configuration Settings" of "Basic Settings"?	Set "RWw/RWr Setting" to 16 points in "Network Configuration Settings" of "Basic Settings".
Has a cyclic transmission stop been executed on the master station?	Restart the stopped cyclic transmission. (☞ Page 116 Link Start/Stop)
When safety communications are performed with the remote device station (safety station), has the safety module validation been performed?	Perform the safety module validation. (🕮Manual for the remote device station used)
Is the safety communication function used in a system containing the submaster station?	Review the system configuration and use the safety communication function in a system not containing the submaster station.

If the above actions do not solve the problem, perform the following tests to check for an error.

- Communication test (☞ Page 37 Communication test)

4.5 List of Parameter Nos.

This section lists the parameter Nos. displayed in the module diagnostics.

Item				Parameter No.
System Parameter	Inter-module Synchronous Setting	Select Inter-module Synchronization Target Module		0101H
		Synchronous Fixed Scan Interval Setting within the Modules		0101H
Required Settings				7100H
Basic Settings	Network Configuration Settings	No.		A040H
		STA#		A044H
		Station Type		A044H A042H
		RX/RY Setting		A041H A042H
		RWw/RWr Setting		A041H A042H
		Reserved/Error Invalid Station/System Switching Monitoring Target Station		• Reserved Station: A001H • Error Invalid Station: A002H • System Switching Monitoring Target Station: A004H
		Pairing		A003H
		Network Synchronous Communication		A045H
		Alias		A011H
		Comment		A011H
	Refresh Settings			7401H
	Network Topology			A040H
Application Settings	Supplementary Cyclic Settings	Link Scan Mode		A040H
		Station-based Block Data Assurance		A040H
		I/O Maintenance Settings	Output Hold/Clear Setting during CPU STOP	A050H
			Data Link Error Station Setting	A050H
			Output Mode upon CPU Error	7101H
	IP Address			A012H
	Communication Mode			A050H
	Parameter Name			7310H
	Dynamic Routing			A050H
	Event Reception from Other Stations			A016H
	Module Operation Mode			7100H
	Interlink Transmission Settings			7500H
	Safety Communication Setting	To Use of Not to Use the Safety Communication Setting		7100H
		Safety Communication Setting		A017H

4.6 Event List

This section lists the events which occur in CC-Link IE Field Network.

System and operation are included in the event types.

System

Event code	Overview	Cause
00100	Link-up	Link-up has occurred when the network cable connected to the external device was connected.
00130	Receive frame error	Receive frame error was detected. Or, the network whose network type is different was connected.
00500	<<Own station>> Baton pass return (network entry)	Baton pass of the own station was returned from interruption status to normal status.
00501	<<Another station>> Baton pass return (network entry)	Baton pass of another station was returned from interruption status to normal status.
00502	All stations baton pass normalization (network entry in all stations)	Baton pass was returned to normal status at all stations.
00510	<<Own station>> Data link restart (cyclic transmission started)	Data link of the own station was restarted.
00511	<<Another station>> Data link restart (cyclic transmission started)	Data link of another station was restarted.
00512	All stations data link normalization (cyclic transmission in all stations started)	Data link was returned to normal status at all stations.
00513	<<Own station>> Data link start instruction acceptance	Data link startup of the own station instruction was received.
00514	<<Own station>> Data link stop instruction acceptance	Data link stop instruction of the own station was received.
00520	<<Own station>> Temporary error invalid station setting instruction acceptance	Temporary error invalid station setting instruction was received.
00521	<<Own station>> Temporary error invalid station cancel instruction acceptance	Temporary error invalid station cancel instruction was received.
00524	<<Another station>> Temporary error invalid station setting execution	Temporary error invalid station was set at another station.
00525	<<Another station>> Temporary error invalid station cancel execution	Temporary error invalid station was canceled at another station.
00530	<<Own station>> Reserved station cancel setting instruction acceptance	Reserved station cancel setting instruction was received.
00531	<<Own station>> Reserved station enable setting instruction acceptance	Reserved station enable setting instruction was received.
00534	<<Another station>> Reserved station cancel setting execution	Reserved station cancel setting was executed at another station.
00535	<<Another station>> Reserved station enable setting instruction execution	Reserved station enable setting was executed at another station.
00541	Receive parameter error resolution	A parameter error received from master station/control station was resolved. (Normal parameter was received.)
00542	<<Own station>> Receive frame error line status caution level	A receive frame error (line status: caution level) has been occurred.
00543	<<Another station>> Receive frame error line status caution level	A receive frame error (line status: caution level) has been occurred.
00800	Link-down	Link-down occurred when network cable connected to the external device was disconnected.
00C00	<<Own station>> Baton pass interruption (departure from network)	Baton pass of the own station was interrupted.
00C01	<<Another station>> Baton pass interruption (departure from network)	Baton pass of another station was interrupted.
00C02	Response error from/to another station	• Abnormal response was returned from another station when accessing another station. • Abnormal response was returned to another station when accessed from another station.
00C10	<<Own station>> Data link stop (cyclic transmission stopped)	Data link of the own station was stopped.

Event code	Overview	Cause
00C11	<<Another station>> Data link stop (cyclic transmission stopped)	Data link of another station was stopped.
00C20	<<Another station>> Parameter error occurrence	An parameter error has occurred in another station.
00C21	<<Another station>> Error occurrence	An error has occurred in another station.
00C22	Station already in use	Master station/submaster station duplication, or station No. overlap has occurred in the network.
00C24	<<Another station>> Receive frame error occurrence	A receive frame error has occurred at another station.
00C25	Receive parameter error occurrence	A parameter error received from the master station or control station has been detected.
00C27	Transient reception failed	Frequency of transient transmission to the own station is too high and transient reception failed.
00C28	<<Own station>> Receive frame error line status warning level	A receive frame error (line status: warning level) has been occurred.
00C29	<<Another station>> Receive frame error line status warning level	A receive frame error (line status: warning level) has been occurred.

Operation

Event code	Overview	Cause
24000	Data link startup instruction	Data link startup to the own station or another station was instructed.
24001	Data link stop instruction	Data link stop to the own station or another station was instructed.
24010	Temporary error invalid station setting instruction	Temporary error invalid station setting was instructed to the slave station.
24011	Temporary error invalid station cancel instruction	Temporary error invalid station cancel was instructed to the slave station.
24020	Reserved station cancel setting instruction	Reserved station cancel setting was instructed to the slave station.
24021	Reserved station enable setting instruction	Reserved station enable setting was instructed to the slave station.
24030	The network No., station No. setting/change instruction execution	Setting or change of the network No. or station No. was instructed to the slave station.
24100	<<Own station>> Parameter change/new parameter acceptance	Parameter was changed. Or new parameter was received at power-on.
24F00	<<Another station>> CPU operating status change detection	Operating status of the programmable controller CPU on another station was changed.

APPENDICES

Appendix 1 Module Label

The I/O signals, buffer memory, link special relay (SB), and link special register (SW) of the Simple Motion module can be set using module label.

Structure of the module label

The module label name is defined with the following structure.

"Instance name"_"Module No."."Label name"

"Instance name"_"Module No."."Label name"_D

Ex.

RD77GF_1.stGF11.bSts_DataLinkError

■Instance name

The following is the instance name of the RD77GF.

Model	Instance name
RD77GF	RD77GF

■Module No.

A sequential No. starting with "1" for identifying a module from the one with the same instance name.

■Label name

A label name unique to the module.

■_D

This symbol indicates that the module label is for direct access. The label without "_D" is for link refresh. The following are the differences between link refresh and direct access.

Type	Description	Access timing
Link refresh	The values read/written from/to the module labels are reflected to the module at link refresh. The execution time of the program can be shortened.	At link refresh
Direct access	The values read/written from/to the module labels are reflected to the module immediately. Although the execution time of the program is longer than the one at the link refresh, the responsiveness is improved.	At writing to or reading from the module label

Point

When multiple Simple Motion modules of the same network No. are mounted and the module labels of link special relay (SB) and link special register (SW) is used for direct access, the access target is the module which has the smallest slot No.

Appendix 2 Buffer Memory

The buffer memory is used to exchange data between the Simple Motion module and the CPU module. Following buffer memory values are defaulted when the CPU module is reset or the system is powered off.

For the list of buffer memory addresses, refer to the following.

📖MELSEC iQ-R Simple Motion Module User's Manual (Application)

List of buffer memory addresses

Name		Initial value	Address (decimal)	Address (hexadecimal)	Read, write
Link device area	Remote input (RX)	0	100000 to 101023	186A0H to 18A9FH	Read
	Remote output (RY)		101024 to 102047	18AA0H to 18E9FH	Read, write
	Remote register (RWw)		102048 to 110239	18EA0H to 1AE9FH	
	Remote register (RWr)		110240 to 118431	1AEA0H to 1CE9FH	Read
	Link special relay (SB)		118432 to 118463	1CEA0H to 1CEBFH	• 18432 to 18433 for read and write • 18434 to 18463 for read only
	Link special register (SW)		118464 to 118975	1CEC0H to 1D0BFH	• 18464 to 18495 for read and write • 18496 to 18975 for read only
System area			118976 to 119455	1D0C0H to 1D29FH	—
RX offset/size information	Station No.1 RX offset	0	119456	1D2A0H	Read
	Station No.1 RX size		119457	1D2A1H	
	⋮		⋮	⋮	
	Station No.120 RX offset		119694	1D38EH	
	Station No.120 RX size		119695	1D38FH	
	Station No.0 RX offset		119696	1D390H	
	Station No.0 RX size		119697	1D391H	
System area			119698 to 119711	1D392H to 1D39FH	—
RY offset/size information	Station No.1 RY offset	0	119712	1D3A0H	Read
	Station No.1 RY size		119713	1D3A1H	
	⋮		⋮	⋮	
	Station No.120 RY offset		119950	1D48EH	
	Station No.120 RY size		119951	1D48FH	
	Station No.0 RY offset		119952	1D490H	
	Station No.0 RY size		119953	1D491H	
System area			119954 to 119967	1D492H to 1D49FH	—
RWw offset/size information	Station No.1 RWw offset	0	119968	1D4A0H	Read
	Station No.1 RWw size		119969	1D4A1H	
	⋮		⋮	⋮	
	Station No.120 RWw offset		120206	1D58EH	
	Station No.120 RWw size		120207	1D58FH	
	Station No.0 RWw offset		120208	1D590H	
	Station No.0 RWw size		120209	1D591H	
System area			120210 to 120223	1D592H to 1D59FH	—

Name		Initial value	Address (decimal)	Address (hexadecimal)	Read, write
RWr offset/size information	Station No.1 RWr offset	0	120224	1D5A0H	Read
	Station No.1 RWr size		120225	1D5A1H	
	⋮		⋮	⋮	
	Station No.120 RWr offset		120462	1D68EH	
	Station No.120 RWr size		120463	1D68FH	
	Station No.0 RWr offset		120464	1D690H	
	Station No. 0 RWr size		120465	1D691H	
System area			120466 to 120511	1D692H to 1D6BFH	—
Own station (network card) information	Manufacturer code	0	120512	1D6C0H	Read
	Model type		120513	1D6C1H	
	Model code	1	120514	1D6C2H	
	Version		120515	1D6C3H	
System area			120516 to 120519	1D6C4H to 1D6C7H	—
Own station (controller) information	Controller information valid/invalid flag	0	120520	1D6C8H	Read
	Manufacturer code		120521	1D6C9H	
	Model type		120522	1D6CAH	
	Model code		120523	1D6CBH	
	Version		120524	1D6CCH	
	Model name string		120525 to 120534	1D6CDH to 1D6D6H	
	Vendor-specific device information		120535 to 120536	1D6D7H to 1D6D8H	
System area			120537 to 120543	1D6D9H to 1D6DFH	—
Other station (network card) information (station No.1)	Manufacturer code	0	120544	1D6E0H	Read
	Model type		120545	1D6E1H	
	Model code		120546	1D6E2H	
	Version		120547	1D6E3H	
System area			120548 to 120551	1D6E4H to 1D6E7H	—
Other station (controller) information (station No.1)	Controller information valid/invalid flag	0	120552	1D6E8H	Read
	Manufacturer code		120553	1D6E9H	
	Model type		120554	1D6EAH	
	Model code		120555	1D6EBH	
	Version		120556	1D6ECH	
	Model name string		120557 to 120566	1D6EDH to 1D6F6H	
	Vendor-specific device information		120567 to 120568	1D6F7H to 1D6F8H	
System area			120569 to 120575	1D6F9H to 1D6FFH	—
Other station information (station No.2 to 120)	Same as other station information (station No.1)	—	120576 to 124383	1D700H to 1E5DFH	—
Other station information (station No.0)	Same as other station information (station No.1)	—	124384 to 124415	1E5E0H to 1E5FFH	—
System area			124416 to 124479	1E600H to 1E63FH	—
Communication path determination status (network No.1 to 16)		0	124480	1E640H	Read
Communication path determination status (network No.17 to 239)		0	124481 to 124495	1E641H to 1E64FH	Read
System area			124496 to 129967	1E650H to 1FBAFH	—
PORT2 line error occurrence rate (max.)	Station No.1	0	130224	1FCB0H	Read
	Station No.2 to 120	0	130225 to 130343	1FCB1H to 1FD27H	Read
	Station No.0	0	130344	1FD28H	Read
System area			130345 to 130351	1FD29H to 1FD2FH	—
PORT2 line error occurrence rate (present)	Station No.1	0	130352	1FD30H	Read
	Station No.2 to 120	0	130353 to 130471	1FD31H to 1FDA7H	Read
	Station No.0	0	130472	1FDA8H	Read
System area			130473 to 165535	1FDA9H to 2869FH	—

Point

- Do not write data to "System area". Doing so may cause malfunction of the programmable controller system.
- If the value in an area of one word becomes equal to or higher than 65536, the count stops at 65535 (FFFFH).

Details of buffer memory addresses

Link device area

The RX, RY, RWw, and RWr values are stored.

■Remote input (RX) (Un\G100000 to Un\G101023)

The RX value is stored. The RX start No. and number of points for each station No. can be checked by the RX offset/size information (Un\G119456 to Un\G119695). (☞ Page 138 RX offset/size information)

Address	b15	b14	b13	b12	b11	b10	b9	b8	b7	b6	b5	b4	b3	b2	b1	b0
Un\G100000	RXF	RXE	RXD	RXC	RXB	RXA	RX9	RX8	RX7	RX6	RX5	RX4	RX3	RX2	RX1	RX0
⋮																
Un\G101023	RX3FFF	RX3FFE	RX3FFD	RX3FFC	RX3FFB	RX3FFA	RX3FF9	RX3FF8	RX3FF7	RX3FF6	RX3FF5	RX3FF4	RX3FF3	RX3FF2	RX3FF1	RX3FF0

Each bit corresponds to 1 bit of RX.

■Remote output (RY) (Un\G101024 to Un\G102047)

The RY value is stored. The RY start No. and number of points for each station No. can be checked by the RY offset/size information (Un\G119712 to Un\G119951). (☞ Page 138 RY offset/size information)

Address	b15	b14	b13	b12	b11	b10	b9	b8	b7	b6	b5	b4	b3	b2	b1	b0
Un\G101024	RYF	RYE	RYD	RYC	RYB	RYA	RY9	RY8	RY7	RY6	RY5	RY4	RY3	RY2	RY1	RY0
⋮																
Un\G102047	RY3FFF	RY3FFE	RY3FFD	RY3FFC	RY3FFB	RY3FFA	RY3FF9	RY3FF8	RY3FF7	RY3FF6	RY3FF5	RY3FF4	RY3FF3	RY3FF2	RY3FF1	RY3FF0

Each bit corresponds to 1 bit of RY.

■Remote register (RWw) (Un\G102048 to Un\G110239)

The RWw value is stored. The RWw start No. and number of points for each station No. can be checked by the RWw offset/size information (Un\G119968 to Un\G120207). (☞ Page 139 RWw offset/size information)

Address	b15	b14	b13	b12	b11	b10	b9	b8	b7	b6	b5	b4	b3	b2	b1	b0
Un\G102048	RWw0															
Un\G102049	RWw1															
⋮																
Un\G110239	RWw1FFF															

■Remote register (RWr) (Un\G110240 to Un\G118431)

The RWr value is stored. The RWr start No. and number of points for each station No. can be checked by the RWr offset/size information (Un\G120224 to Un\G120463). (☞ Page 139 RWr offset/size information)

Address	b15	b14	b13	b12	b11	b10	b9	b8	b7	b6	b5	b4	b3	b2	b1	b0
Un\G110240	RWr0															
Un\G110241	RWr1															
⋮																
Un\G118431	RWr1FFF															

■Link special relay (SB) (Un\G118432 to Un\G118463)

The SB value is stored.

Address	b15	b14	b13	b12	b11	b10	b9	b8	b7	b6	b5	b4	b3	b2	b1	b0
Un\G118432	SBF	SBE	SBD	SBC	SBB	SBA	SB9	SB8	SB7	SB6	SB5	SB4	SB3	SB2	SB1	SB0
⋮																
Un\G118463	SB1FF	SB1FE	SB1FD	SB1FC	SB1FB	SB1FA	SB1F9	SB1F8	SB1F7	SB1F6	SB1F5	SB1F4	SB1F3	SB1F2	SB1F1	SB1F0

Each bit corresponds to 1 bit of SB.

■Link special register (SW) (Un\G118464 to Un\G118975)

The SW value is stored.

Address	b15	b14	b13	b12	b11	b10	b9	b8	b7	b6	b5	b4	b3	b2	b1	b0
Un\G118464	SW0															
Un\G118465	SW1															
⋮																
Un\G118975	SW1FFF															

RX offset/size information

■RX offset/size information (Un\G119456 to Un\G119697)

The start No. and the number of points of RX for each station are stored.

Address	Description
Un\G119456	Station No.1 offset
Un\G119457	Station No.1 size (in units of words)
Un\G119458	Station No.2 offset
Un\G119459	Station No.2 size (in units of words)
⋮	
Un\G119694	Station No.120 offset
Un\G119695	Station No.120 size (in units of words)
Un\G119696	Station No.0 offset
Un\G119697	Station No.0 size (in units of words)

The offset and size of buffer memory areas for each station No. (other than a station No.0) can be calculated using the following formulas:

- Offset buffer memory address = 119456 + (station No. - 1) × 2
- Size buffer memory address = 119457 + (station No. - 1) × 2

RY offset/size information

■RY offset/size information (Un\G119712 to Un\G119953)

The start No. and the number of points of RY for each station are stored.

Address	Description
Un\G119712	Station No.1 offset
Un\G119713	Station No.1 size (in units of words)
Un\G119714	Station No.2 offset
Un\G119715	Station No.2 size (in units of words)
⋮	
Un\G119950	Station No.120 offset
Un\G119951	Station No.120 size (in units of words)
Un\G119952	Station No.0 offset
Un\G119953	Station No.0 size (in units of words)

The offset and size of buffer memory areas for each station No. (other than a station No.0) can be calculated using the following formulas:

- Offset buffer memory address = 119712 + (station No. - 1) × 2
- Size buffer memory address = 119713 + (station No. - 1) × 2

RWw offset/size information

■RWw offset/size information (Un\G119968 to Un\G120209)

The start No. and the number of points of RWw for each station are stored.

Address	Description
Un\G119968	Station No.1 offset
Un\G119969	Station No.1 size (in units of words)
Un\G119970	Station No.2 offset
Un\G119971	Station No.2 size (in units of words)
⋮	
Un\G120206	Station No.120 offset
Un\G120207	Station No.120 size (in units of words)
Un\G120208	Station No.0 offset
Un\G120209	Station No.0 size (in units of words)

The offset and size of buffer memory areas for each station No. (other than a station No.0) can be calculated using the following formulas:

- Offset buffer memory address = 119968 + (station No. - 1) × 2
- Size buffer memory address = 119969 + (station No. - 1) × 2

RWr offset/size information

■RWr offset/size information (Un\G120224 to Un\G120465)

The start No. and the number of points of RWr for each station are stored.

Address	Description
Un\G120224	Station No.1 offset
Un\G120225	Station No.1 size (in units of words)
Un\G120226	Station No.2 offset
Un\G120227	Station No.2 size (in units of words)
⋮	
Un\G120462	Station No.120 offset
Un\G120463	Station No.120 size (in units of words)
Un\G120464	Station No.0 offset
Un\G120465	Station No.0 size (in units of words)

The offset and size of buffer memory areas for each station No. (other than a station No.0) can be calculated using the following formulas:

- Offset buffer memory address = 120224 + (station No. - 1) × 2
- Size buffer memory address = 120225 + (station No. - 1) × 2

Own station information

The information of the own station on the network is stored.

■Own station (network card) information (Un\G120512 to Un\G120515)

Address	Name	Description
Un\G120512	Manufacturer code	The Simple Motion module information of the own station is stored.
Un\G120513	Model type	
Un\G120514	Model code	
Un\G120515	Version	

■Own station (controller) information (Un\G120520 to Un\G120536)

Address	Name	Description
Un\G120520	Controller information valid/invalid flag	Whether the value stored in the own station (controller) information is valid or invalid is stored. • 0: Invalid • 1: Valid
Un\G120521	Manufacturer code	The Simple Motion module information of the own station is stored.
Un\G120522	Model type	
Un\G120523	Model code	
Un\G120524	Version	
Un\G120525 to Un\G120534	Model name string	
Un\G120535 to Un\G120536	Vendor-specific device information	

Other station information

The information of other station on the network is stored. These areas can be used in a master station only.

■Other station (network card) information (station No.1) (Un\G120544 to Un\G120547)

Address	Name	Description
Un\G120544	Manufacturer code	The information of the other station (station No.1) is stored.
Un\G120545	Model type	
Un\G120546	Model code	
Un\G120547	Version	

■Other station (controller) information (station No.1) (Un\G120552 to Un\G120568)

Address	Name	Description
Un\G120552	Controller information valid/invalid flag	Whether the value stored in Other station (controller) information (station No.1) is valid or invalid is stored. 0: Invalid 1: Valid
Un\G120553	Manufacturer code	The Simple Motion module information of another station is stored.
Un\G120554	Model type	
Un\G120555	Model code	
Un\G120556	Version	
Un\G120557 to Un\G120566	Model name string	
Un\G120567 to Un\G120568	Vendor-specific device information	

■Other station information (station No.2 to 120) (Un\G120576 to Un\G124383)

The information on station No.2 to station No.120 is stored in the same order as Other station (network card) information (station No.1) and Other station (controller) information (station No.1).

■Other station information (station No.0) (Un\G124384 to Un\G124415)

The information on station No.0 is stored in the same order as Other station (network card) information (station No.1) and Other station (controller) information (station No.1).

Communication path determination status

■Communication path determination status (Un\G124480 to Un\G124495)

The determination information on the communication path for each network No. of the destination station is stored.

- 0: Route undetermined
- 1: Route determined

Address	b15	b14	b13	b12	b11	b10	b9	b8	b7	b6	b5	b4	b3	b2	b1	b0
Un\G124480	16	15	14	13	12	11	10	9	8	7	6	5	4	3	2	1
⋮																
Un\G124494	Empty	239	238	237	236	235	234	233	232	231	230	229	228	227	226	225
Un\G124495	Empty															

The Nos. in the table indicate network Nos.

PORT2 line error occurrence rate (max.)

The receive frame error occurrence rate (maximum value) on the PORT2 side is stored.

Note that no value is stored in the area for the station No. of the own station.

■PORT2 line error occurrence rate (max.) (station No.1) (Un\G130224)

The receive frame error occurrence rate (maximum value) of station No.1 is stored.

■PORT2 line error occurrence rate (max.) (station No.2 to 120) (Un\G130225 to Un\G130343)

The receive frame error occurrence rate (maximum value) of station No.2 to 120 is stored.

■PORT2 line error occurrence rate (max.) (station No.0) (Un\G130344)

The receive frame error occurrence rate (maximum value) of station No.0 is stored.

PORT2 line error occurrence rate (present)

The receive frame error occurrence rate (present value) on the PORT2 side is stored.

Note that no value is stored in the area for the station No. of the own station.

■PORT2 line error occurrence rate (present) (station No.1) (Un\G130352)

The receive frame error occurrence rate (present value) of station No.1 is stored.

■PORT2 line error occurrence rate (present) (station No.2 to 120) (Un\G130353 to Un\G130471)

The receive frame error occurrence rate (present value) of station No.2 to 120 is stored.

■PORT2 line error occurrence rate (present) (station No.0) (Un\G130472)

The receive frame error occurrence rate (present value) of station No.0 is stored.

Appendix 3 List of Link Special Relay (SB)

The link special relay (SB) is turned on/off depending on various factors during data link. Any error status of the data link can be checked by using or monitoring it in the program.

Application of link special relay (SB)

By using link special relay (SB), the status of CC-Link IE Field Network can be checked from HMI (Human Machine Interfaces) as well as the engineering tool.

Refresh of link special relay (SB)

To use link special relay (SB), set them in "Refresh Setting" in "Basic Settings" so that they are refreshed to the devices or labels of the CPU module. (☞ Page 69 Refresh Settings)

Ranges turned on/off by users and by the system

The following ranges correspond to when the link special relay areas (SB) are assigned from SB0000 to SB01FF.

- Turned on/off by users: SB0000 to SB001F
- Turned on/off by the system: SB0020 to SB01FF

List of link special relay (SB)

The following table lists the link special relay areas (SB) when they are assigned from SB0000 to SB01FF.

Point

Do not turn on or off areas whose Nos. are not on the following list or ranges turned on/off by the system. Doing so may cause malfunction of the programmable controller system.

No.	Name	Description
SB0000	Link startup of own station	Starts data link (cyclic transmission) of the own station. Off: Startup not requested On: Startup requested (valid at rising edge) (Conditions) • This relay is enabled when "Baton pass status of own station" (SB0047) is off. • For SB0000 to SB0003, only one of the areas can be turned on.
SB0001	Link stop of own station	Stops data link (cyclic transmission) of the own station. Off: Stop not requested On: Stop requested (valid at rising edge) (Conditions) • This relay is enabled when "Baton pass status of own station" (SB0047) is off. • For SB0000 to SB0003, only one of the areas can be turned on.
SB0002	System link startup	Starts data link (cyclic transmission) of the entire system. The station where cyclic transmission is started is specified in "Link startup/stop direction" (SW0000) and "Link startup/stop station specification" (SW0001 to SB0008). Off: Startup not requested On: Startup requested (valid at rising edge) (Conditions) • This relay is enabled when "Baton pass status of own station" (SB0047) is off. • For SB0000 to SB0003, only one of the areas can be turned on.
SB0003	System link stop	Stops data link (cyclic transmission) of the entire system. The station where cyclic transmission is stopped is specified in "Link startup/stop direction" (SW0000) and "Link startup/stop station specification" (SW0001 to SW0008). Off: Stop not requested On: Stop requested (valid at rising edge) (Conditions) • This relay is enabled when "Baton pass status of own station" (SB0047) is off. • For SB0000 to SB0003, only one of the areas can be turned on.
SB0006	Clear communication error count	Clears the link special register areas related to communication errors (SW0068 to SW006B, SW0074 to SW0077, SW007C to SW007F, SW0120 to SW015F) to 0. Off: Clear not requested On: Clear requested (valid while on)

No.	Name	Description
SB0010	Temporary error invalid station setting request	Sets the station specified in "Reserved station function disable/temporary error invalid station setting" (SW0010 to SW0017) as a temporary error invalid station. Off: No request On: Request issued (When this relay is turned off, the error definition stored in "Temporary error invalid station setting result" (SW0054) is cleared.)
SB0011	Temporary error invalid station setting cancel request	Cancels the temporary error invalid station setting for the station specified in "Reserved station function disable/temporary error invalid station setting" (SW0010 to SW0017). Off: No request On: Request issued (When this relay is turned off, the error definition stored in "Temporary error invalid station setting cancel result" (SW0055) is cleared.)
SB0012	Reserved station function disable request	Temporarily cancels the reserved station specification for the station specified in "Reserved station function disable/temporary error invalid station setting" (SW0010 to SW0017). Off: No request On: Request issued (When this relay is turned off, the error definition stored in "Result of reserved station function disable request" (SW0056) is cleared.)
SB0013	Reserved station specification enable request	Enables the reserved station specification for the station specified in "Reserved station function disable/temporary error invalid station setting" (SW0010 to SW0017). (This can only be requested for the stations whose reserved station setting is temporarily canceled) Off: No request On: Request issued (When this relay is turned off, the error definition stored in "Result of reserved station function enable request" (SW0057) is cleared.)
SB0030	RECV execution request flag CH1	Stores the data reception status of own station channel 1. Off: No data received On: Data received (Conditions) • This relay is enabled when "Baton pass status of own station" (SB0047) is off. • When "Baton pass status of own station" (SB0047) is turned on, data prior to error is held.
SB0031	RECV execution request flag CH2	Stores the data reception status of own station channel 2. Off: No data received On: Data received (Conditions) • This relay is enabled when "Baton pass status of own station" (SB0047) is off. • When "Baton pass status of own station" (SB0047) is turned on, data prior to error is held.
SB0032	RECV execution request flag CH3	Stores the data reception status of own station channel 3. Off: No data received On: Data received (Conditions) • This relay is enabled when "Baton pass status of own station" (SB0047) is off. • When "Baton pass status of own station" (SB0047) is turned on, data prior to error is held.
SB0033	RECV execution request flag CH4	Stores the data reception status of own station channel 4. Off: No data received On: Data received (Conditions) • This relay is enabled when "Baton pass status of own station" (SB0047) is off. • When "Baton pass status of own station" (SB0047) is turned on, data prior to error is held.
SB0034	RECV execution request flag CH5	Stores the data reception status of own station channel 5. Off: No data received On: Data received (Conditions) • This relay is enabled when "Baton pass status of own station" (SB0047) is off. • When "Baton pass status of own station" (SB0047) is turned on, data prior to error is held.
SB0035	RECV execution request flag CH6	Stores the data reception status of own station channel 6. Off: No data received On: Data received (Conditions) • This relay is enabled when "Baton pass status of own station" (SB0047) is off. • When "Baton pass status of own station" (SB0047) is turned on, data prior to error is held.
SB0036	RECV execution request flag CH7	Stores the data reception status of own station channel 7. Off: No data received On: Data received (Conditions) • This relay is enabled when "Baton pass status of own station" (SB0047) is off. • When "Baton pass status of own station" (SB0047) is turned on, data prior to error is held.

No.	Name	Description
SB0037	RECV execution request flag CH8	Stores the data reception status of own station channel 8. Off: No data received On: Data received (Conditions) • This relay is enabled when "Baton pass status of own station" (SB0047) is off. • When "Baton pass status of own station" (SB0047) is turned on, data prior to error is held.
SB0040	Network type of own station	Stores the network type of the own station. On: CC-Link IE Field Network
SB0043	Module operation mode of own station	Stores the module operation mode of the own station. Off: Online mode On: Other than online mode
SB0044	Station setting 1 of own station	Stores the station type of the own station. Off: Slave station (other than the master station) On: Master station
SB0046	Station No. setting status of own station	Stores the station No. setting status. Off: Station No. set On: Station No. not set If parameters are set using the engineering tool, this relay is always OFF.
SB0047	Baton pass status of own station	Stores the baton pass status (transient transmission availability) of the own station. Off: Normal On: Error When this relay is turned on, the cause of the error can be checked with "Baton pass status of own station" (SW0047) and "Cause of baton pass interruption" (SW0048). Depending on the link refresh timing, the update of "Baton pass status of own station" (SW0047) and "Cause of baton pass interruption" (SW0048) may be offset by one sequence scan.
SB0049	Data link error status of own station	Stores the data link error status of the own station. Off: Normal On: Error When this relay is turned on, the cause of the error can be checked with "Cause of data link stop" (SW0049). Depending on the link refresh timing, the update of "Cause of data link stop" (SW0049) may be offset by one sequence scan. (Conditions) • This relay is enabled when "Baton pass status of own station" (SB0047) is off. • When "Baton pass status of own station" (SB0047) is turned on, data prior to error is held.
SB004A	CPU minor error status of own station	Stores the minor error occurrence status of the CPU module on the own station. Off: No minor error On: Minor error
SB004B	CPU moderate/major error status of own station	Stores the moderate/major error occurrence status of the CPU module on the own station. Off: No moderate/major error On: Moderate/major error
SB004C	CPU operating status of own station	Stores the operating status of the CPU module on the own station. Off: RUN On: STOP, PAUSE, or moderate/major error
SB004D	Received parameter error	Stores the status of received parameter. (For the master station, this relay stores the parameter status of the own station) Off: Normal On: Error
SB0050	Link startup request accept status of own station	Stores the acceptance status of "Link startup of own station" (SB0000). Off: Not accepted (SB0000 is off.) On: Accepted (SB0000 is on.) (Conditions) • This relay is enabled when "Baton pass status of own station" (SB0047) is off. • When "Baton pass status of own station" (SB0047) is turned on, data prior to error is held.
SB0051	Link startup completion status of own station	Stores the status of link startup processing requested with "Link startup of own station" (SB0000). Off: Link startup not completed (SB0000, SB0050 are off.) On: Link startup completed (SB0000, SB0050 are on.) (Conditions) • This relay is enabled when "Baton pass status of own station" (SB0047) is off. • When "Baton pass status of own station" (SB0047) is turned on, data prior to error is held.
SB0052	Link stop request accept status of own station	Stores the acceptance status of "Link stop of own station" (SB0001). Off: Not accepted (SB0001 is off.) On: Accepted (SB0001 is on.) (Conditions) • This relay is enabled when "Baton pass status of own station" (SB0047) is off. • When "Baton pass status of own station" (SB0047) is turned on, data prior to error is held.

No.	Name	Description
SB0053	Link stop completion status of own station	Stores the link stop processing status requested with "Link stop of own station" (SB0001). Off: Not completed (SB0001, SB0052 are off.) On: Completed (SB0001, SB0052 are on.) (Conditions) • This relay is enabled when "Baton pass status of own station" (SB0047) is off. • When "Baton pass status of own station" (SB0047) is turned on, data prior to error is held.
SB0054	System link startup request accept status	Stores the acceptance status of "System link startup" (SB0002). Off: Not accepted (SB0002 is off.) On: Accepted (SB0002 is on.) (Conditions) • This relay is enabled when "Baton pass status of own station" (SB0047) is off. • When "Baton pass status of own station" (SB0047) is turned on, data prior to error is held.
SB0055	System link startup completion status	Stores the status of link startup processing requested with "System link startup" (SB0002). Off: Not completed (SB0002, SB0054 are off.) On: Completed (SB0002, SB0054 are on.) (Conditions) • This relay is enabled when "Baton pass status of own station" (SB0047) is off. • When "Baton pass status of own station" (SB0047) is turned on, data prior to error is held.
SB0056	System link stop request accept status	Stores the acceptance status of "System link stop" (SB0003). Off: Not accepted (SB0003 is off.) On: Accepted (SB0003 is on.) (Conditions) • This relay is enabled when "Baton pass status of own station" (SB0047) is off. • When "Baton pass status of own station" (SB0047) is turned on, data prior to error is held.
SB0057	System link stop completion status	Stores the status of link stop processing requested with "System link stop" (SB0003). Off: Not completed (SB0003, SB0056 are off.) On: Completed (SB0003, SB0056 are on.) (Conditions) • This relay is enabled when "Baton pass status of own station" (SB0047) is off. • When "Baton pass status of own station" (SB0047) is turned on, data prior to error is held.
SB0058	Temporary error invalid station setting request accept status	Stores the acceptance status of "Temporary error invalid station setting request" (SB0010). Off: Not accepted (SB0010 is off.) On: Accepted (SB0010 is on.)
SB0059	Temporary error invalid station setting request completion status	Stores the status of temporary error invalid station setting processing requested with "Temporary error invalid station setting request" (SB0010). Off: Not completed (SB0010, SB0058 are off.) On: Completed successfully or ended with an error (SB0010, SB0058 are on.)
SB005A	Temporary error invalid station setting cancel request accept status	Stores the acceptance status of "Temporary error invalid station setting cancel request" (SB0011). Off: Not accepted (SB0011 is off.) On: Accepted (SB0011 is on.)
SB005B	Temporary error invalid station setting cancel completion status	Stores the status of temporary error invalid station setting cancellation processing requested with "Temporary error invalid station setting cancel request" (SB0011). Off: Not completed (SB0011, SB005A are off.) On: Completed successfully or ended with an error (SB0011, SB005A are on.)
SB005C	Reserved station function disable request accept status	Stores the acceptance status of "Reserved station function disable request" (SB0012). Off: Not accepted (SB0012 is off.) On: Accepted (SB0012 is on.)
SB005D	Reserved station function disable completion status	Stores the status of temporary cancellation processing for reserved station specification which is requested with "Reserved station function disable request" (SB0012). Off: Not completed (SB0012, SB005C are off.) On: Completed successfully or ended with an error (SB0012, SB005C are on.)
SB005E	Reserved station setting enable request accept status	Stores the acceptance status of "Reserved station specification enable request" (SB0013). Off: Not accepted (SB0013 is off.) On: Accepted (SB0013 is on.)
SB005F	Reserved station setting enable completion status	Stores the temporary cancellation processing status for reserved station specification, which is requested with "Reserved station specification enable request" (SB0013). Off: Not completed (SB0013, SB005E are off.) On: Completed successfully or ended with an error (SB0013, SB005E are on.)
SB006B	PORT2 link-down status of own station	Stores the link down status of the own station P2 side. Off: Link-up On: Link-down The time that link-up starts after power-on or Ethernet cable connection may vary. Normally link-up takes several seconds. Depending on device status on the line, a link-up processing is repeated, resulting in the increase in the time.

No.	Name	Description
SB006D	PORT2 current error frame reception status of own station (1)	Stores if a receive frame error line status caution level is currently occurring in the P2 side of the own station. Off: A receive frame error line status caution level is not occurring. On: A receive frame error line status caution level is occurring.
SB006F	PORT2 error frame reception detection status of own station (latch) (1)	Stores if a receive frame error line status caution level has occurred in the P2 side of the own station from power-on until the present. Off: A receive frame error line status caution level has not yet occurred. On: A receive frame error line status caution level has occurred.
SB0072	Scan mode setting information	Stores the setting status of link scan mode. Off: Asynchronous with sequence scan or constant link scan On: Synchronous with sequence scan
SB0074	Reserved station specification status	Stores the status of reserved station specification by parameter. The station No. of the station set as a reserved station can be checked with "Reserved station setting status" (SW00C0 to SW00C7). Off: Not specified On: Specified
SB0075	Error invalid station setting status	Stores the status of error invalid station setting by parameter. The station No. of the station set as an error invalid station can be checked with "Error invalid station setting status" (SW00D0 to SW00D7). Off: Not specified On: Specified
SB0078	Network topology setting	Stores the setting status of "Network Topology" in "Basic Settings" for the own station (master operating station). Off: Line topology, star topology, or coexistence of star and line topologies On: Ring topology
SB007B	Input data status of data link faulty station	Stores the setting status of "Data Link Error Station Setting" under "I/O Maintenance Settings" in "Supplementary Cyclic Settings" of "Application Settings" for the own station. Off: Clear On: Hold
SB007D	Hold/clear status setting for CPU STOP	Stores the setting status of "Output Hold/Clear Setting during CPU STOP" under "I/O Maintenance Settings" in "Supplementary Cyclic Settings" of "Application Settings" for the own station. Off: Hold On: Clear
SB007F	IP address setting status	Stores the status of the IP address setting by parameter. Off: No setting On: Set For local stations, this relay stores the acceptance status of the IP address from the master station.
SB008D	PORT2 current error frame reception status of own station (2)	Stores if a receive frame error line status warning level is currently occurring in the P2 side of the own station. Off: A receive frame error line status warning level is not occurring. On: A receive frame error line status warning level is occurring.
SB008F	PORT2 error frame reception detection status of own station (latch) (2)	Stores if a receive frame error line status warning level has occurred in the P2 side of the own station from power-on until the present. Off: A receive frame error line status warning level has not yet occurred. On: A receive frame error line status warning level has occurred.
SB0098	Network configuration mismatch occurrence status	Stores the match or mismatch status of the actual network configuration and the network map of the CC-Link IE Field Network diagnostics. Off: Match On: Mismatch After return or addition of the slave station, SB0098 may be turned on regardless of the actual match/mismatch status.
SB0099	Number of connected modules over occurrence status	Stores whether the number of slave stations (including a submaster station) connected is 120 or less, or 121 or more. Off: 120 or less On: 121 or more Number of connected modules is the total of the slave stations (including a submaster station) which are currently connected and the disconnected stations (slave stations which were previously connected).
SB00A0	Baton pass error status of each station	Stores the baton pass status of each station. Off: All stations normal On: Faulty station exists When this relay is turned on, the status of each station can be checked with "Baton pass status of each station" (SW00A0 to SW00A7). Depending on the link refresh timing, the update of "Baton pass status of each station" (SW00A0 to SW00A7) may be offset by one sequence scan. (Conditions) • This relay is enabled when "Baton pass status of own station" (SB0047) is off. • When "Baton pass status of own station" (SB0047) is turned on, data prior to error is held. • Reserved stations and stations higher than the maximum station No. are ignored.

No.	Name	Description
SB00A1	Baton pass error status of master station	Stores the baton pass status of the master station (master operating station). Off: Normal On: Error (Conditions) • This relay is enabled when "Baton pass status of own station" (SB0047) is off. • When "Baton pass status of own station" (SB0047) is turned on, data prior to error is held.
SB00B0	Data link error status of each station	Stores the data link status of each station. Off: All stations normal On: Faulty station exists When this relay is turned on, the status of each station can be checked with "Data link status of each station" (SW00B0 to SW00B7). Depending on the link refresh timing, the update of "Data link status of each station" (SW00B0 to SW00B7) may be offset by one sequence scan. If the master station is powered on before slave stations, data link may be reconfigured. During the reconfiguration (maximum three seconds), "Data link error status of each station" (SB00B0) is turned on (error). Starting up the master station last can prevent data link from being reconnected and "Data link error status of each station" (SB00B0) from being turned on (error). (Conditions) • This relay is enabled when "Baton pass status of own station" (SB0047) is off. • When "Baton pass status of own station" (SB0047) is turned on, data prior to error is held. • Reserved stations and stations higher than the maximum station No. are ignored.
SB00B1	Data link error status of master station	Stores the data link status of the master station (master operating station). Off: Normal On: Error (Conditions) • This relay is enabled when "Baton pass status of own station" (SB0047) is off. • When "Baton pass status of own station" (SB0047) is turned on, data prior to error is held.
SB00B8	Network connection status of each station	Stores whether a network connected station exists. Off: No network connected station On: Network connected station exists When this relay is turned on, the status of each station can be checked with "Network connection status" (SW00B8 to SW00BF). Depending on the link refresh timing, the update of "Network connection status" (SW00B8 to SW00BF) may be offset by one sequence scan.
SB00C0	Reserved station setting status	Stores whether a reserved station is set. Off: No setting On: Set When this relay is turned on, the status of each station can be checked with "Reserved station setting status" (SW00C0 to SW00C7). Depending on the link refresh timing, the update of "Reserved station setting status" (SW00C0 to SW00C7) may be offset by one sequence scan. (Conditions) • This relay is enabled when "Baton pass status of own station" (SB0047) is off. • When "Baton pass status of own station" (SB0047) is turned on, data prior to error is held.
SB00D0	Error invalid station setting current status	Set whether an error invalid station is set. Off: No setting On: Set When this relay is turned on, the status of each station can be checked with "Error invalid station setting status" (SW00D0 to SW00D7). Depending on the link refresh timing, the update of "Error invalid station setting status" (SW00D0 to SW00D7) may be offset by one sequence scan. (Conditions) • This relay is enabled when "Baton pass status of own station" (SB0047) is off. • When "Baton pass status of own station" (SB0047) is turned on, data prior to error is held.
SB00E0	Temporary error invalid station setting status	Stores whether a temporary error invalid station is set. Off: No setting On: Set When this relay is turned on, the status of each station can be checked with "Temporary error invalid station setting status" (SW00E0 to SW00E7). Depending on the link refresh timing, the update of "Temporary error invalid station setting status" (SW00E0 to SW00E7) may be offset by one sequence scan. (Conditions) • This relay is enabled when "Baton pass status of own station" (SB0047) is off. • When "Baton pass status of own station" (SB0047) is turned on, data prior to error is held.

No.	Name	Description
SB00E8	Station type match status of each station	Stores the station type match status of each station. Off: Station type match in all stations On: Station type mismatch exists When this relay is turned on, the status of each station can be checked with "Station type match status" (SW00E8 to SW00EF). Depending on the link refresh timing, the update of "Station type match status" (SW00E8 to SW00EF) may be offset by one sequence scan.
SB00F0	CPU operating status of each station	Stores the operating status of the CPU module on each station. Off: All stations are at RUN or STEP-RUN state On: Station at STOP or PAUSE state, or station with a moderate/major error exists. When this relay is turned on, the status of each station can be checked with "CPU operating status of each station" (SW00F0 to SW00F7). Depending on the link refresh timing, the update of "CPU operating status of each station" (SW00F0 to SW00F7) may be offset by one sequence scan. (Conditions) • This relay is enabled when "Baton pass status of own station" (SB0047) is off. • When "Baton pass status of own station" (SB0047) is turned on, data prior to error is held.
SB00F1	CPU operating status of master station	Stores the operating status of the CPU module on the master station (master operating station). Off: RUN or STEP-RUN state On: STOP state, PAUSE state, or moderate/major error (Conditions) • This relay is enabled when "Baton pass status of own station" (SB0047) is off. • When "Baton pass status of own station" (SB0047) is turned on, data prior to error is held.
SB00F8	Network No. match status	Stores the network No. match status of each station. Off: Network No. match in all stations On: Network No. mismatch station exists When this relay is turned on, the status of each station can be checked with "Network No. match status" (SW00F8 to SW00FF). Depending on the link refresh timing, the update "Network No. match status" (SW00F8 to SW00FF) may be offset by one sequence scan.
SB0100	CPU moderate/major error status of each station	Stores the moderate/major error or stop error occurrence status of each station. When the target station is the master/local module, the occurrence status on the control CPU is stored. Off: No moderate/major error (stop error) On: Station with a moderate/major error (stop error) exists When this relay is turned on, the status of each station can be checked with "CPU moderate/major error status of each station" (SW0100 to SW0107). Depending on the link refresh timing, the update of "CPU moderate/major error status of each station" (SW0100 to SW0107) may be offset by one sequence scan. (Conditions) • This relay is enabled when "Baton pass status of own station" (SB0047) is off. • When "Baton pass status of own station" (SB0047) is turned on, data prior to error is held.
SB0101	CPU moderate/major error status of master station	Stores the moderate/major error occurrence status of the CPU module on the master station (master operation station). Off: No moderate/major error On: Moderate/major error (Conditions) • This relay is enabled when "Baton pass status of own station" (SB0047) is off. • When "Baton pass status of own station" (SB0047) is turned on, data prior to error is held.
SB0108	Station No. duplication occurrence status	Stores the station No. duplication occurrence status of each station. Off: Station No. not duplicated On: Station No. duplicated When this relay is turned on, the status of each station can be checked with "Station No. duplication occurrence status" (SW0108 to SW010F). Depending on the link refresh timing, the update of "Station No. duplication occurrence status" (SW0108 to SW010F) may be offset by one sequence scan.
SB0110	CPU minor error status of each station	Stores the minor error or continuation error occurrence status of each station. When the target station is the master/local module, the occurrence status on the control CPU is stored. Off: All stations normal or station with a moderate/major error (stop error) exists. On: Station with a minor error (continuation error) exists. When this relay is turned on, the status of each station can be checked with "CPU minor error status of each station" (SW0110 to SW0117). Depending on the link refresh timing, the update of "CPU minor error status of each station" (SW0110 to SW0117) may be offset by one sequence scan. (Conditions) • This relay is enabled when "Baton pass status of own station" (SB0047) is off. • When "Baton pass status of own station" (SB0047) is turned on, data prior to error is held.

No.	Name	Description
SB0111	CPU minor error status of master station	Stores the minor error occurrence status of the CPU module on the master station (master operating station). Off: No minor errors, or a moderate/major error being occurred On: Minor error (Conditions) • This relay is enabled when "Baton pass status of own station" (SB0047) is off. • When "Baton pass status of own station" (SB0047) is turned on, data prior to error is held.
SB0130	PORT2 current error frame reception status (1)	Stores if a receive frame error line status caution level is currently occurring in the P2 side of each station. Off: A receive frame error line status caution level is not occurring in any stations. On: A receive frame error line status caution level is occurring in one or more stations. If a receive frame error line status caution level is occurring, the status of each station can be checked with "PORT2 current error frame reception status of each station (1)" (SW0130 to SW0137). Depending on the link refresh timing, the update of "PORT2 current error frame reception status of each station (1)" (SW0130 to SW0137) may be offset by one sequence scan. (Conditions) • This relay is enabled when "Baton pass status of own station" (SB0047) is off. • When "Baton pass status of own station" (SB0047) is turned on, data prior to error is held.
SB0131	PORT2 current error frame reception status of master station	Stores whether the error frame is currently received at the P2 side of the master station (master operating station). Off: Not received On: Currently receiving (Conditions) • This relay is enabled when "Baton pass status of own station" (SB0047) is off. • When "Baton pass status of own station" (SB0047) is turned on, data prior to error is held.
SB0138	PORT2 current error frame reception status (2)	Stores if a receive frame error line status warning level is currently occurring in the P2 side of each station. Off: A receive frame error line status warning level is not occurring in any stations. On: A receive frame error line status warning level is occurring in one or more stations. If a receive frame error line status warning level is occurring, the status of each station can be checked with "PORT2 current error frame reception status of each station (2)" (SW0138 to SW013F). Depending on the link refresh timing, the update of "PORT2 current error frame reception status of each station (2)" (SW0138 to SW013F) may be offset by one sequence scan. (Conditions) • This relay is enabled when "Baton pass status of own station" (SB0047) is off. • When "Baton pass status of own station" (SB0047) is turned on, data prior to error is held.
SB0150	PORT2 error frame reception detection status (1)	Stores if a receive frame error line status caution level has occurred in the P2 side of each station from power-on until the present. Off: A receive frame error line status caution level has not yet occurred in any stations. On: A receive frame error line status caution level has occurred in one or more stations. If a receive frame error line status caution level has occurred, the status of each station can be checked with "PORT2 error frame reception detection status (1)" (SW0150 to SW0157). Depending on the link refresh timing, the update of "PORT2 error frame reception detection status (1)" (SW0150 to SW0157) may be offset by one sequence scan. (Conditions) • This relay is enabled when "Baton pass status of own station" (SB0047) is off. • When "Baton pass status of own station" (SB0047) is turned on, data prior to error is held.
SB0151	PORT2 error frame detection of master station	Stores whether the error frame was received at the P2 side of the master station (master operating station) from power-on to the present. Off: Not received On: Received (Conditions) • This relay is enabled when "Baton pass status of own station" (SB0047) is off. • When "Baton pass status of own station" (SB0047) is turned on, data prior to error is held.
SB0158	PORT2 error frame reception detection status (2)	Stores if a receive frame error line status warning level has occurred in the P2 side of each station from power-on until the present. Off: A receive frame error line status warning level has not yet occurred in any stations. On: A receive frame error line status warning level has occurred in one or more stations. If a receive frame error line status warning level has occurred, the status of each station can be checked with "PORT2 error frame reception detection status (2)" (SW0158 to SW015F). Depending on the link refresh timing, the update of "PORT2 error frame reception detection status (2)" (SW0158 to SW015F) may be offset by one sequence scan. (Conditions) • This relay is enabled when "Baton pass status of own station" (SB0047) is off. • When "Baton pass status of own station" (SB0047) is turned on, data prior to error is held.

No.	Name	Description
SB0170	Parameter error status of each station	Stores the parameter error status of each station. Off: All stations normal On: Faulty station exists When this relay is turned on, the status of each station can be checked with "Parameter error status of each station" (SW0170 to SW0177). Depending on the link refresh timing, the update of "Parameter error status of each station" (SW0170 to SW0177) may be offset by one sequence scan. (Conditions) • This relay is enabled when "Baton pass status of own station" (SB0047) is off. • When "Baton pass status of own station" (SB0047) is turned on, data prior to error is held. • Reserved stations and stations higher than the maximum station No. are ignored.
SB0180	Reserved station function disable status	Stores whether there is a station whose reserved station setting is temporarily canceled. Off: Not exist On: Exists When this relay is turned on, the status of each station can be checked with "Reserved station cancel setting status" (SW0180 to SW0187). Depending on the link refresh timing, the update of "Reserved station cancel setting status" (SW0180 to SW0187) may be offset by one sequence scan. (Conditions) • This relay is enabled when "Baton pass status of own station" (SB0047) is off. • When "Baton pass status of own station" (SB0047) is turned on, data prior to error is held.
SB01E1	Setting status of CC-Link IE Field Network synchronous communication function	Stores the setting status of the CC-Link IE Field Network synchronous communication function. Off: No setting On: Set
SB01E9	Inter-module synchronization cycle over flag	Stores the cycle over occurrence status of the inter-module synchronization function. This relay is turned on if output preparation processing (link scan for network modules) is not completed within the inter-module synchronization cycle. Off: Processing time overflow has not occurred. On: Processing time overflow has occurred. Once this relay is turned on, it remains turned on even if the processing is operated within the specified inter-module synchronization cycle. The status is cleared by turning off and on the power supply or resetting the CPU module.

Appendix 4 List of Link Special Register (SW)

The link special register (SW) stores the information during data link as a numerical value. Error locations and causes can be checked by using or monitoring the link special register (SW) in programs.

Application of link special register (SW)

By using link special register (SW), the status of CC-Link IE Field Network can be checked from HMI (Human Machine Interfaces) as well as the engineering tool.

Refresh of link special register (SW)

To use link special register (SW), set them in "Refresh Settings" under "Basic Settings" so that they are refreshed to the devices or labels of the CPU module. (☞ Page 69 Refresh Settings)

Range where data are stored by users and range where data are stored by the system

The following ranges correspond to when the link special register areas (SW) are assigned from SW0000 to SW01FF.

- Stored by users: SW0000 to SW001F
- Stored by the system: SW0020 to SW01FF

List of link special register (SW)

The following table lists the link special register areas (SW) when they are assigned from SW0000 to SW01FF.

Point

Do not write any data to an area whose No. is not on the following list or ranges where data are stored by the system. Doing so may cause malfunction of the programmable controller system.

<table>
<tr><th>No.</th><th>Name</th><th>Description</th></tr>
<tr><td>SW0000</td><td>Link startup/stop direction</td><td>Set the content of data link startup/stop directions.
00H: Own station
01H: All stations
02H: Specified stations
80H: Own station enforced (enabled only for data link startup)
81H: All stations enforced (enabled only for data link startup)
82H: Specified stations enforced (enabled only for data link startup)
• Data link startup/stop is performed by "System link startup" (SB0002) or "System link stop" (SB0003).
• When 02H (specified station) or 82H (specified station enforced) is selected, the own station is not included.</td></tr>
<tr><td>SW0001
to
SW0008</td><td>Link startup/stop station specification</td><td>Set the station No. to start or stop data link when 02H or 82H is set in "Link startup/stop direction" (SW0000).
0: Startup or stop not requested
1: Startup or stop requested
<table>
<tr><th></th><th>b15</th><th>b14</th><th>b13</th><th>b12</th><th>b11</th><th>b10</th><th>b9</th><th>b8</th><th>b7</th><th>b6</th><th>b5</th><th>b4</th><th>b3</th><th>b2</th><th>b1</th><th>b0</th></tr>
<tr><td>SW0001</td><td>16</td><td>15</td><td>14</td><td>13</td><td>12</td><td>11</td><td>10</td><td>9</td><td>8</td><td>7</td><td>6</td><td>5</td><td>4</td><td>3</td><td>2</td><td>1</td></tr>
<tr><td>SW0002</td><td>32</td><td>31</td><td>30</td><td>29</td><td>28</td><td>27</td><td>26</td><td>25</td><td>24</td><td>23</td><td>22</td><td>21</td><td>20</td><td>19</td><td>18</td><td>17</td></tr>
<tr><td>SW0003</td><td>48</td><td>47</td><td>46</td><td>45</td><td>44</td><td>43</td><td>42</td><td>41</td><td>40</td><td>39</td><td>38</td><td>37</td><td>36</td><td>35</td><td>34</td><td>33</td></tr>
<tr><td>SW0004</td><td>64</td><td>63</td><td>62</td><td>61</td><td>60</td><td>59</td><td>58</td><td>57</td><td>56</td><td>55</td><td>54</td><td>53</td><td>52</td><td>51</td><td>50</td><td>49</td></tr>
<tr><td>SW0005</td><td>80</td><td>79</td><td>78</td><td>77</td><td>76</td><td>75</td><td>74</td><td>73</td><td>72</td><td>71</td><td>70</td><td>69</td><td>68</td><td>67</td><td>66</td><td>65</td></tr>
<tr><td>SW0006</td><td>96</td><td>95</td><td>94</td><td>93</td><td>92</td><td>91</td><td>90</td><td>89</td><td>88</td><td>87</td><td>86</td><td>85</td><td>84</td><td>83</td><td>82</td><td>81</td></tr>
<tr><td>SW0007</td><td>112</td><td>111</td><td>110</td><td>109</td><td>108</td><td>107</td><td>106</td><td>105</td><td>104</td><td>103</td><td>102</td><td>101</td><td>100</td><td>99</td><td>98</td><td>97</td></tr>
<tr><td>SW0008</td><td>—</td><td>—</td><td>—</td><td>125</td><td>—</td><td>—</td><td>—</td><td>—</td><td>120</td><td>119</td><td>118</td><td>117</td><td>116</td><td>115</td><td>114</td><td>113</td></tr>
</table>
Each No. in the table represents a station No.
• To specify the master station operating as a submaster station (station No.0), turn on the bit of the station No.125.
• While the submaster station is operating as a master operating station, setting of the submaster station No. is ignored.</td></tr>
<tr><td>SW0009</td><td>RIRD/RIWT instruction arrival monitoring time</td><td>Specify the monitoring time until the RIRD/RIWT instruction completion.
If the instruction is not completed within the time, it will be resent for the number of times specified in "RIRD/RIWT instruction resend count" (SW000B).
0: 10 seconds (default)
1 to 360: 1 to 360 seconds
If a value other than the above is specified, 360 seconds will be applied.</td></tr>
</table>

<table>
<tr><th>No.</th><th>Name</th><th>Description</th></tr>
<tr><td>SW000B</td><td>RIRD/RIWT instruction resend count</td><td>Specify the number of times the instruction is to be resent when it is not completed within the monitoring time specified in "RIRD/RIWT instruction arrival monitoring time" (SW0009).
0: Not resent (default)
1 to 7: 1 to 7 times
If a value other than the above is specified, 7 times will be applied.</td></tr>
<tr><td>SW0010
to
SW0017</td><td>Reserved station function disable/ temporary error invalid station setting</td><td>Specify the slave station for which the reserved station setting is to be temporary canceled/restored, or the temporary error invalid station setting is to be set/canceled.
0: Not specified
1: Specified
<table>
<tr><th></th><th>b15</th><th>b14</th><th>b13</th><th>b12</th><th>b11</th><th>b10</th><th>b9</th><th>b8</th><th>b7</th><th>b6</th><th>b5</th><th>b4</th><th>b3</th><th>b2</th><th>b1</th><th>b0</th></tr>
<tr><td>SW0010</td><td>16</td><td>15</td><td>14</td><td>13</td><td>12</td><td>11</td><td>10</td><td>9</td><td>8</td><td>7</td><td>6</td><td>5</td><td>4</td><td>3</td><td>2</td><td>1</td></tr>
<tr><td>SW0011</td><td>32</td><td>31</td><td>30</td><td>29</td><td>28</td><td>27</td><td>26</td><td>25</td><td>24</td><td>23</td><td>22</td><td>21</td><td>20</td><td>19</td><td>18</td><td>17</td></tr>
<tr><td>SW0012</td><td>48</td><td>47</td><td>46</td><td>45</td><td>44</td><td>43</td><td>42</td><td>41</td><td>40</td><td>39</td><td>38</td><td>37</td><td>36</td><td>35</td><td>34</td><td>33</td></tr>
<tr><td>SW0013</td><td>64</td><td>63</td><td>62</td><td>61</td><td>60</td><td>59</td><td>58</td><td>57</td><td>56</td><td>55</td><td>54</td><td>53</td><td>52</td><td>51</td><td>50</td><td>49</td></tr>
<tr><td>SW0014</td><td>80</td><td>79</td><td>78</td><td>77</td><td>76</td><td>75</td><td>74</td><td>73</td><td>72</td><td>71</td><td>70</td><td>69</td><td>68</td><td>67</td><td>66</td><td>65</td></tr>
<tr><td>SW0015</td><td>96</td><td>95</td><td>94</td><td>93</td><td>92</td><td>91</td><td>90</td><td>89</td><td>88</td><td>87</td><td>86</td><td>85</td><td>84</td><td>83</td><td>82</td><td>81</td></tr>
<tr><td>SW0016</td><td>112</td><td>111</td><td>110</td><td>109</td><td>108</td><td>107</td><td>106</td><td>105</td><td>104</td><td>103</td><td>102</td><td>101</td><td>100</td><td>99</td><td>98</td><td>97</td></tr>
<tr><td>SW0017</td><td>—</td><td>—</td><td>—</td><td>—</td><td>—</td><td>—</td><td>—</td><td>—</td><td>120</td><td>119</td><td>118</td><td>117</td><td>116</td><td>115</td><td>114</td><td>113</td></tr>
</table>
Each No. in the table represents a station No.
(Conditions)
• For some stations, reserved station setting cannot be temporarily canceled/restored or temporary error invalid station setting cannot be set/canceled. (☞ Page 118 Reserved Station Function Enable, Page 120 Enable/Disable Ignore Station Errors)
• When the submaster station No. is specified, the setting is ignored.
• Stations higher than the maximum station No. are ignored.</td></tr>
<tr><td>SW001A</td><td>REMFR/REMTO instruction resend count</td><td>Set the number of resends for the REMFR/REMTO instruction.
0: Not resent (default)
Other than the above: Number of times that is set
(Conditions)
• This register is enabled when "Baton pass status of own station" (SB0047) is off.
• When "Baton pass status of own station" (SB0047) is turned on (error), data prior to error is held.</td></tr>
<tr><td>SW001B</td><td>REMFR/REMTO instruction response wait timer time</td><td>Set the response wait time for the REMFR/REMTO instruction.
0: 10 seconds (default)
Other than the above: Number of seconds that is set
(Conditions)
• This register is enabled when "Baton pass status of own station" (SB0047) is off.
• When "Baton pass status of own station" (SB0047) is turned on (error), data prior to error is held.</td></tr>
<tr><td>SW0030</td><td>Link dedicated instructions processing result CH1</td><td>Stores the processing results of the link dedicated instruction that used channel 1 of the own station.
0: Completed normally
1 or greater: Completed with an error (Error code is stored.)</td></tr>
<tr><td>SW0031</td><td>Link dedicated instructions processing result CH2</td><td>Stores the processing results of the link dedicated instruction that used channel 2 of the own station.
0: Completed normally
1 or greater: Completed with an error (Error code is stored.)</td></tr>
<tr><td>SW0040</td><td>Network No.</td><td>Stores the network No. of the own station.
Range: 1 to 239</td></tr>
<tr><td>SW0042</td><td>Station No.</td><td>Stores the station No. of the own station.
Range: 1 to 120, 125 (master station), 255 (station No. not set)</td></tr>
<tr><td>SW0043</td><td>Mode status of own station</td><td>Stores the module operation mode setting or communication mode of the own station.
0: Online mode, normal
1: Online mode, high speed
2: Offline mode</td></tr>
<tr><td>SW0046</td><td>Module type</td><td>Stores the hardware status of the own station.
<table>
<tr><th></th><th>b15</th><th>to</th><th>b2</th><th>b1</th><th>b0</th></tr>
<tr><td>SW0046</td><td>0</td><td>to</td><td>0</td><td>▨</td><td>▨</td></tr>
</table>
Model type
00: Module
01: Board
10: HMI</td></tr>
</table>

No.	Name	Description
SW0047	Baton pass status of own station	Stores the baton pass status (transient transmission availability) of the own station. 0: Data link in progress 2: Baton pass in progress 3: Baton pass being terminated 4: Test in progress 5: Offline
SW0048	Cause of baton pass interruption	Stores the cause of interruption in the communication (baton pass) of the own station. 00H: At normal communication or power-on 30H: Cable disconnection 33H: Disconnection or return in progress 40H: Offline mode 60H: Network topology setting error
SW0049	Cause of data link stop	Stores the cause which stopped the data link of the own station. 00H: At normal communication or power-on 01H: Stop direction 02H: Monitoring time timeout 05H: No slave station (master station only) 10H: Parameter not received (local station only) 11H: Station No. of the own station out of the range 12H: Reserved station setting of the own station 13H: Own station No. duplication 14H: Master station duplication/submaster station duplication 16H: Station No. not set 18H: Parameter error 19H: Parameter communication in progress 1AH: Station type mismatch 1BH: Parameter mismatch 1DH: Initial processing of CC-Link IE Field Network synchronous communication 20H: CPU module moderate error, major error 60H: Illegal ring connection (master station only)
SW004A	Data link stop request station	Stores the station No. of the station that performed the data link stop request for the own station. Range: 1 to 120, 125 (master station) The data link stop request is performed by "System link stop" (SB0003). (Conditions) • This register is enabled when "Baton pass status of own station" (SB0047) is off. • When "Baton pass status of own station" (SB0047) is turned on (error), data prior to error is held.
SW004B	CPU status of own station	Stores the status of the CPU module on the own station. 00H: No CPU module mounted 01H: STOP (normal) 02H: STOP (moderate/major error) 03H: STOP (minor error) 04H: RUN (normal) 05H: RUN (minor error) 07H: PAUSE 0EH: Reset in progress 0FH: Initial processing
SW004C	Parameter setting status	Stores the status of parameter settings. 0: Normal 1 or greater: Error definition (Error code is stored.) (Conditions) • This register is enabled when "Received parameter error" (SB004D) is on.
SW0050	Link startup result of own station	Stores the results when data link is started by "Link startup of own station" (SB0000). 0: Normal 1 or greater: Error definition (Error code is stored.) When "Link startup of own station" (SB0000) is turned off, the stored error definition is cleared. (Conditions) • This register is enabled when "Baton pass status of own station" (SB0047) is off. • When "Baton pass status of own station" (SB0047) is turned on (error), data prior to error is held.
SW0051	Link stop result of own station	Stores the results when data link is stopped by "Link stop of own station" (SB0001). 0: Normal 1 or greater: Error definition (Error code is stored.) When "Link stop of own station" (SB0001) is turned off, the stored error definition is cleared. (Conditions) • This register is enabled when "Baton pass status of own station" (SB0047) is off. • When "Baton pass status of own station" (SB0047) is turned on (error), data prior to error is held.

No.	Name	Description
SW0052	System link startup result	Stores the results when data link is started by "System link startup" (SB0002). 0: Normal 1 or greater: Error definition in own station (Error code is stored.) When "System link startup" (SB0002) is turned off, the stored error definition is cleared. (Conditions) • This register is enabled when "Baton pass status of own station" (SB0047) is off. • When "Baton pass status of own station" (SB0047) is turned on (error), data prior to error is held.
SW0053	System link stop result	Stores the results when data link is stopped by "System link stop" (SB0003). 0: Normal 1 or greater: Error definition in own station (Error code is stored.) When "System link stop" (SB0003) is turned off, the stored error definition is cleared. (Conditions) • This register is enabled when "Baton pass status of own station" (SB0047) is off. • When "Baton pass status of own station" (SB0047) is turned on (error), data prior to error is held.
SW0054	Temporary error invalid station setting result	Stores the results when executing the temporary error invalid station setting by "Temporary error invalid station setting request" (SB0010). 0: Normal 1 or greater: Error definition (Error code is stored.) When "Temporary error invalid station setting request" (SB0010) is turned off, the stored error definition is cleared.
SW0055	Temporary error invalid station setting cancel result	Stores the results when canceling the temporary error invalid station setting by "Temporary error invalid station setting cancel request" (SB0011). 0: Normal 1 or greater: Error definition (Error code is stored.) When "Temporary error invalid station setting cancel request" (SB0011) is turned off, the stored error definition is cleared.
SW0056	Result of reserved station function disable request	Stores the results when disabling the reserved station function by "Reserved station function disable request" (SB0012). 0: Normal 1 or greater: Error definition (Error code is stored.) When "Reserved station function disable request" (SB0012) is turned off, the stored error definition is cleared.
SW0057	Result of reserved station function enable request	Stores the results when reserved station function disable is undone by "Reserved station specification enable request" (SB0013). 0: Normal 1 or greater: Error definition (Error code is stored.) When "Reserved station specification enable request" (SB0013) is turned off, the stored error definition is cleared.
SW0058	Total number of slave stations setting value	Stores the total number of slave stations that are set by the parameters. Range: 1 to 120
SW0059	Total number of slave stations present value	Stores the total number of slave stations that are actually connected by data link. Range: 1 to 120 (0 when own station is disconnected)
SW005A	Maximum baton pass station No.	Stores the maximum station No. of the stations where the baton pass is normally performed. Range: 1 to 120 (0 when own station is disconnected) (Conditions) • This register is enabled when "Baton pass status of own station" (SB0047) is off. • When "Baton pass status of own station" (SB0047) is turned on (error), data prior to error is held.
SW005B	Maximum data link station No.	Stores the maximum station No. of the station where the data link is normally performed. Range: 1 to 120 (0 when own station is disconnected) (Conditions) • This register is enabled when "Data link error status of own station" (SB0049) is off.
SW0060	Maximum link scan time	Stores the maximum value of the link scan time during cyclic transmission. (Unit: ms) (Conditions) • This register is enabled when "Baton pass status of own station" (SB0047) is off. • When "Baton pass status of own station" (SB0047) is turned on (error), data prior to error is held.
SW0061	Minimum link scan time	Stores the minimum value of the link scan time during cyclic transmission. (Unit: ms) (Conditions) • This register is enabled when "Baton pass status of own station" (SB0047) is off. • When "Baton pass status of own station" (SB0047) is turned on (error), data prior to error is held.
SW0062	Current link scan time	Stores the present value of the link scan time during cyclic transmission. (Unit: ms) The stored value contains a maximum error of 1 ms. (Conditions) • This register is enabled when "Baton pass status of own station" (SB0047) is off. • When "Baton pass status of own station" (SB0047) is turned on (error), data prior to error is held.

No.	Name	Description
SW0064	Connection status of own station	Stores the connection status of the own station. 00H: Normal (communication in progress on P2) 01H: Normal (cable disconnected on P2) 04H: Normal (cable disconnected on P2) 10H: Normal (cable disconnected on P1, communication in progress on P2) 11H: Disconnecting (cable disconnected on P1 and P2) 12H: Disconnecting (cable disconnected on P1, establishing line on P2) 21H: Disconnecting (cable disconnected on P2) 22H: Disconnecting (establishing line on P2)
SW0066	Actual link scan time (lower 1 word)	Stores the link scan time during cyclic transmission. (Unit: µs)
SW0067	Actual link scan time (upper 1 word)	
SW006A	PORT2 receive error occurrence rate of own station (max.)	Stores the occurrence rate (maximum value) of received error frames at the P2 side of the own station. (Unit: %) When "Clear communication error count" (SB0006) is turned on, the stored value for the occurrence rate is cleared.
SW006B	PORT2 receive error occurrence rate of own station (present)	Stores the occurrence rate (present value) of received error frames at the P2 side of the own station. (Unit: %) When "Clear communication error count" (SB0006) is turned on, the stored value for the occurrence rate is cleared.
SW006D	Master operating station No.	Stores the station No. of a master operating station. 0: No submaster function setting 1 to 120: Station No. of the submaster station (master operating station) 125: Master station (master operating station) (Conditions) • This register is enabled when "Baton pass status of own station" (SB0047) is off. • When "Baton pass status of own station" (SB0047) is turned on (error), data prior to error is held.
SW006E	Submaster operating station No.	Stores the station No. of a submaster operating station. 0: No submaster function setting 1 to 120: Station No. of the submaster station (submaster operating station) 125: Master station (submaster operating station) (Conditions) • This register is enabled when "Baton pass status of own station" (SB0047) is off. • When "Baton pass status of own station" (SB0047) is turned on (error), data prior to error is held.
SW007C	PORT2 cable disconnection detection count	Stores the cumulative count that was detected for cable disconnections at the P2 side. When "Clear communication error count" (SB0006) is turned on, the stored value for the number of errors is cleared. When FFFFH (maximum value 65535) is counted, the value returns to 0 and the module continues to count.
SW007D	PORT2 receive error detection count	Stores the cumulative count that error data was received at the P2 side. The count stores only error data that is not transmitted to all stations. When "Clear communication error count" (SB0006) is turned on, the stored value for the number of errors is cleared. When FFFFH (maximum value 65535) is counted, counting stops.
SW007E	PORT2 total no. of received data (lower 1 word)	Stores the cumulative count that data was received at the P2 side. When "Clear communication error count" (SB0006) is turned on, the stored value for the number of errors is cleared. When FFFFFFFFH (maximum value 4294967295) is counted, counting stops.
SW007F	PORT2 total no. of received data (upper 1 word)	
SW0080 to SW009F	REMFR/REMTO instruction execution status	Stores the execution status of the REMFR/REMTO instruction for each channel. SW0080 to SW009F: Channel 1 to Channel 32 0: Completed normally 1 or greater: Completed with an error (Error code is stored.)

<table>
<tr><th>No.</th><th>Name</th><th>Description</th></tr>
<tr><td>SW00A0
to
SW00A7</td><td>Baton pass status of each station</td><td>
Stores the baton pass status of each station.
0: Baton pass normal station
1: Baton pass faulty station
• If multiple stations change from faulty to normal, because they are reconnected to the network one by one per link scan, the time until the status changes to "0: Baton pass normal station" may vary by several seconds.
• If cables are connected/disconnected or the module is reset in line and ring topologies, the token may be lost or a reconstruction may occur, causing the baton pass status to detect an error in the first link scan.
<table>
<tr><th></th><th>b15</th><th>b14</th><th>b13</th><th>b12</th><th>b11</th><th>b10</th><th>b9</th><th>b8</th><th>b7</th><th>b6</th><th>b5</th><th>b4</th><th>b3</th><th>b2</th><th>b1</th><th>b0</th></tr>
<tr><td>SW00A0</td><td>16</td><td>15</td><td>14</td><td>13</td><td>12</td><td>11</td><td>10</td><td>9</td><td>8</td><td>7</td><td>6</td><td>5</td><td>4</td><td>3</td><td>2</td><td>1</td></tr>
<tr><td>SW00A1</td><td>32</td><td>31</td><td>30</td><td>29</td><td>28</td><td>27</td><td>26</td><td>25</td><td>24</td><td>23</td><td>22</td><td>21</td><td>20</td><td>19</td><td>18</td><td>17</td></tr>
<tr><td>SW00A2</td><td>48</td><td>47</td><td>46</td><td>45</td><td>44</td><td>43</td><td>42</td><td>41</td><td>40</td><td>39</td><td>38</td><td>37</td><td>36</td><td>35</td><td>34</td><td>33</td></tr>
<tr><td>SW00A3</td><td>64</td><td>63</td><td>62</td><td>61</td><td>60</td><td>59</td><td>58</td><td>57</td><td>56</td><td>55</td><td>54</td><td>53</td><td>52</td><td>51</td><td>50</td><td>49</td></tr>
<tr><td>SW00A4</td><td>80</td><td>79</td><td>78</td><td>77</td><td>76</td><td>75</td><td>74</td><td>73</td><td>72</td><td>71</td><td>70</td><td>69</td><td>68</td><td>67</td><td>66</td><td>65</td></tr>
<tr><td>SW00A5</td><td>96</td><td>95</td><td>94</td><td>93</td><td>92</td><td>91</td><td>90</td><td>89</td><td>88</td><td>87</td><td>86</td><td>85</td><td>84</td><td>83</td><td>82</td><td>81</td></tr>
<tr><td>SW00A6</td><td>112</td><td>111</td><td>110</td><td>109</td><td>108</td><td>107</td><td>106</td><td>105</td><td>104</td><td>103</td><td>102</td><td>101</td><td>100</td><td>99</td><td>98</td><td>97</td></tr>
<tr><td>SW00A7</td><td>—</td><td>—</td><td>—</td><td>—</td><td>—</td><td>—</td><td>—</td><td>—</td><td>120</td><td>119</td><td>118</td><td>117</td><td>116</td><td>115</td><td>114</td><td>113</td></tr>
</table>
Each No. in the table represents a station No.
— is fixed to 0.
(Conditions)
• This register is enabled when "Baton pass status of own station" (SB0047) is off.
• When "Baton pass status of own station" (SB0047) is turned on (error), data prior to error is held.
• Reserved stations and stations higher than the maximum station No. are ignored.
</td></tr>
<tr><td>SW00B0
to
SW00B7</td><td>Data link status of each station</td><td>
Stores the data link status of each station.
0: Data link normal station
1: Data link faulty station
• If multiple stations change from faulty to normal, because they are reconnected to the network one by one per link scan, the time until the status changes to "0: Data link normal station" may vary by several seconds.
• If no response is received for several link scans, the station is determined to be a data link faulty station.
<table>
<tr><th></th><th>b15</th><th>b14</th><th>b13</th><th>b12</th><th>b11</th><th>b10</th><th>b9</th><th>b8</th><th>b7</th><th>b6</th><th>b5</th><th>b4</th><th>b3</th><th>b2</th><th>b1</th><th>b0</th></tr>
<tr><td>SW00B0</td><td>16</td><td>15</td><td>14</td><td>13</td><td>12</td><td>11</td><td>10</td><td>9</td><td>8</td><td>7</td><td>6</td><td>5</td><td>4</td><td>3</td><td>2</td><td>1</td></tr>
<tr><td>SW00B1</td><td>32</td><td>31</td><td>30</td><td>29</td><td>28</td><td>27</td><td>26</td><td>25</td><td>24</td><td>23</td><td>22</td><td>21</td><td>20</td><td>19</td><td>18</td><td>17</td></tr>
<tr><td>SW00B2</td><td>48</td><td>47</td><td>46</td><td>45</td><td>44</td><td>43</td><td>42</td><td>41</td><td>40</td><td>39</td><td>38</td><td>37</td><td>36</td><td>35</td><td>34</td><td>33</td></tr>
<tr><td>SW00B3</td><td>64</td><td>63</td><td>62</td><td>61</td><td>60</td><td>59</td><td>58</td><td>57</td><td>56</td><td>55</td><td>54</td><td>53</td><td>52</td><td>51</td><td>50</td><td>49</td></tr>
<tr><td>SW00B4</td><td>80</td><td>79</td><td>78</td><td>77</td><td>76</td><td>75</td><td>74</td><td>73</td><td>72</td><td>71</td><td>70</td><td>69</td><td>68</td><td>67</td><td>66</td><td>65</td></tr>
<tr><td>SW00B5</td><td>96</td><td>95</td><td>94</td><td>93</td><td>92</td><td>91</td><td>90</td><td>89</td><td>88</td><td>87</td><td>86</td><td>85</td><td>84</td><td>83</td><td>82</td><td>81</td></tr>
<tr><td>SW00B6</td><td>112</td><td>111</td><td>110</td><td>109</td><td>108</td><td>107</td><td>106</td><td>105</td><td>104</td><td>103</td><td>102</td><td>101</td><td>100</td><td>99</td><td>98</td><td>97</td></tr>
<tr><td>SW00B7</td><td>—</td><td>—</td><td>—</td><td>—</td><td>—</td><td>—</td><td>—</td><td>—</td><td>120</td><td>119</td><td>118</td><td>117</td><td>116</td><td>115</td><td>114</td><td>113</td></tr>
</table>
Each No. in the table represents a station No.
— is fixed to 0.
(Conditions)
• This register is enabled when "Baton pass status of own station" (SB0047) is off.
• When "Baton pass status of own station" (SB0047) is turned on (error), data prior to error is held.
• Reserved stations and stations higher than the maximum station No. are ignored.
</td></tr>
<tr><td>SW00B8
to
SW00BF</td><td>Network connection status</td><td>
Stores the network connection status.
0: Station not connected to network
1: Station connected to network
<table>
<tr><th></th><th>b15</th><th>b14</th><th>b13</th><th>b12</th><th>b11</th><th>b10</th><th>b9</th><th>b8</th><th>b7</th><th>b6</th><th>b5</th><th>b4</th><th>b3</th><th>b2</th><th>b1</th><th>b0</th></tr>
<tr><td>SW00B8</td><td>16</td><td>15</td><td>14</td><td>13</td><td>12</td><td>11</td><td>10</td><td>9</td><td>8</td><td>7</td><td>6</td><td>5</td><td>4</td><td>3</td><td>2</td><td>1</td></tr>
<tr><td>SW00B9</td><td>32</td><td>31</td><td>30</td><td>29</td><td>28</td><td>27</td><td>26</td><td>25</td><td>24</td><td>23</td><td>22</td><td>21</td><td>20</td><td>19</td><td>18</td><td>17</td></tr>
<tr><td>SW00BA</td><td>48</td><td>47</td><td>46</td><td>45</td><td>44</td><td>43</td><td>42</td><td>41</td><td>40</td><td>39</td><td>38</td><td>37</td><td>36</td><td>35</td><td>34</td><td>33</td></tr>
<tr><td>SW00BB</td><td>64</td><td>63</td><td>62</td><td>61</td><td>60</td><td>59</td><td>58</td><td>57</td><td>56</td><td>55</td><td>54</td><td>53</td><td>52</td><td>51</td><td>50</td><td>49</td></tr>
<tr><td>SW00BC</td><td>80</td><td>79</td><td>78</td><td>77</td><td>76</td><td>75</td><td>74</td><td>73</td><td>72</td><td>71</td><td>70</td><td>69</td><td>68</td><td>67</td><td>66</td><td>65</td></tr>
<tr><td>SW00BD</td><td>96</td><td>95</td><td>94</td><td>93</td><td>92</td><td>91</td><td>90</td><td>89</td><td>88</td><td>87</td><td>86</td><td>85</td><td>84</td><td>83</td><td>82</td><td>81</td></tr>
<tr><td>SW00BE</td><td>112</td><td>111</td><td>110</td><td>109</td><td>108</td><td>107</td><td>106</td><td>105</td><td>104</td><td>103</td><td>102</td><td>101</td><td>100</td><td>99</td><td>98</td><td>97</td></tr>
<tr><td>SW00BF</td><td>—</td><td>—</td><td>—</td><td>—</td><td>—</td><td>—</td><td>—</td><td>—</td><td>120</td><td>119</td><td>118</td><td>117</td><td>116</td><td>115</td><td>114</td><td>113</td></tr>
</table>
Each No. in the table represents a station No.
— is fixed to 0.
(Conditions)
• This register is not affected by "Baton pass status of each station" (SW00A0 to SW00A7), "Data link error status of each station" (SB00B0), and "Data link status of each station" (SW00B0 to SW00B7).
• This register is enabled only for the station which has the same network No. as a master operating station.
</td></tr>
</table>

<table>
<tr><th>No.</th><th>Name</th><th>Description</th></tr>
<tr><td>SW00C0
to
SW00C7</td><td>Reserved station setting status</td><td>Stores the reserved station setting status of each station.
0: Station other than a reserved station (included reserved stations that have been temporarily canceled)
1: Reserved station
<table>
<tr><th></th><th>b15</th><th>b14</th><th>b13</th><th>b12</th><th>b11</th><th>b10</th><th>b9</th><th>b8</th><th>b7</th><th>b6</th><th>b5</th><th>b4</th><th>b3</th><th>b2</th><th>b1</th><th>b0</th></tr>
<tr><td>SW00C0</td><td>16</td><td>15</td><td>14</td><td>13</td><td>12</td><td>11</td><td>10</td><td>9</td><td>8</td><td>7</td><td>6</td><td>5</td><td>4</td><td>3</td><td>2</td><td>1</td></tr>
<tr><td>SW00C1</td><td>32</td><td>31</td><td>30</td><td>29</td><td>28</td><td>27</td><td>26</td><td>25</td><td>24</td><td>23</td><td>22</td><td>21</td><td>20</td><td>19</td><td>18</td><td>17</td></tr>
<tr><td>SW00C2</td><td>48</td><td>47</td><td>46</td><td>45</td><td>44</td><td>43</td><td>42</td><td>41</td><td>40</td><td>39</td><td>38</td><td>37</td><td>36</td><td>35</td><td>34</td><td>33</td></tr>
<tr><td>SW00C3</td><td>64</td><td>63</td><td>62</td><td>61</td><td>60</td><td>59</td><td>58</td><td>57</td><td>56</td><td>55</td><td>54</td><td>53</td><td>52</td><td>51</td><td>50</td><td>49</td></tr>
<tr><td>SW00C4</td><td>80</td><td>79</td><td>78</td><td>77</td><td>76</td><td>75</td><td>74</td><td>73</td><td>72</td><td>71</td><td>70</td><td>69</td><td>68</td><td>67</td><td>66</td><td>65</td></tr>
<tr><td>SW00C5</td><td>96</td><td>95</td><td>94</td><td>93</td><td>92</td><td>91</td><td>90</td><td>89</td><td>88</td><td>87</td><td>86</td><td>85</td><td>84</td><td>83</td><td>82</td><td>81</td></tr>
<tr><td>SW00C6</td><td>112</td><td>111</td><td>110</td><td>109</td><td>108</td><td>107</td><td>106</td><td>105</td><td>104</td><td>103</td><td>102</td><td>101</td><td>100</td><td>99</td><td>98</td><td>97</td></tr>
<tr><td>SW00C7</td><td>—</td><td>—</td><td>—</td><td>—</td><td>—</td><td>—</td><td>—</td><td>—</td><td>120</td><td>119</td><td>118</td><td>117</td><td>116</td><td>115</td><td>114</td><td>113</td></tr>
</table>
Each No. in the table represents a station No.
— is fixed to 0.
(Conditions)
• This register is enabled when "Baton pass status of own station" (SB0047) is off.
• When "Baton pass status of own station" (SB0047) is turned on (error), data prior to error is held.
• This register is enabled only for normally operating stations in "Baton pass status of each station" (SW00A0 to SW00A7).
• Stations higher than the maximum station No. are ignored.</td></tr>
<tr><td>SW00C8
to
SW00CF</td><td>Parameter setting status</td><td>Stores the status of parameter settings.
0: Station not set in the parameter
1: Station set in the parameter
<table>
<tr><th></th><th>b15</th><th>b14</th><th>b13</th><th>b12</th><th>b11</th><th>b10</th><th>b9</th><th>b8</th><th>b7</th><th>b6</th><th>b5</th><th>b4</th><th>b3</th><th>b2</th><th>b1</th><th>b0</th></tr>
<tr><td>SW00C8</td><td>16</td><td>15</td><td>14</td><td>13</td><td>12</td><td>11</td><td>10</td><td>9</td><td>8</td><td>7</td><td>6</td><td>5</td><td>4</td><td>3</td><td>2</td><td>1</td></tr>
<tr><td>SW00C9</td><td>32</td><td>31</td><td>30</td><td>29</td><td>28</td><td>27</td><td>26</td><td>25</td><td>24</td><td>23</td><td>22</td><td>21</td><td>20</td><td>19</td><td>18</td><td>17</td></tr>
<tr><td>SW00CA</td><td>48</td><td>47</td><td>46</td><td>45</td><td>44</td><td>43</td><td>42</td><td>41</td><td>40</td><td>39</td><td>38</td><td>37</td><td>36</td><td>35</td><td>34</td><td>33</td></tr>
<tr><td>SW00CB</td><td>64</td><td>63</td><td>62</td><td>61</td><td>60</td><td>59</td><td>58</td><td>57</td><td>56</td><td>55</td><td>54</td><td>53</td><td>52</td><td>51</td><td>50</td><td>49</td></tr>
<tr><td>SW00CC</td><td>80</td><td>79</td><td>78</td><td>77</td><td>76</td><td>75</td><td>74</td><td>73</td><td>72</td><td>71</td><td>70</td><td>69</td><td>68</td><td>67</td><td>66</td><td>65</td></tr>
<tr><td>SW00CD</td><td>96</td><td>95</td><td>94</td><td>93</td><td>92</td><td>91</td><td>90</td><td>89</td><td>88</td><td>87</td><td>86</td><td>85</td><td>84</td><td>83</td><td>82</td><td>81</td></tr>
<tr><td>SW00CE</td><td>112</td><td>111</td><td>110</td><td>109</td><td>108</td><td>107</td><td>106</td><td>105</td><td>104</td><td>103</td><td>102</td><td>101</td><td>100</td><td>99</td><td>98</td><td>97</td></tr>
<tr><td>SW00CF</td><td>—</td><td>—</td><td>—</td><td>—</td><td>—</td><td>—</td><td>—</td><td>—</td><td>120</td><td>119</td><td>118</td><td>117</td><td>116</td><td>115</td><td>114</td><td>113</td></tr>
</table>
Each No. in the table represents a station No.
— is fixed to 0.
(Conditions)
• This register is enabled when "Baton pass status of own station" (SB0047) is off.
• When "Baton pass status of own station" (SB0047) is turned on (error), data prior to error is held.
• Stations higher than the maximum station No. are ignored.</td></tr>
<tr><td>SW00D0
to
SW00D7</td><td>Error invalid station setting status</td><td>Stores the error invalid station setting status of each station.
0: Station other than an error invalid station
1: Error invalid station
<table>
<tr><th></th><th>b15</th><th>b14</th><th>b13</th><th>b12</th><th>b11</th><th>b10</th><th>b9</th><th>b8</th><th>b7</th><th>b6</th><th>b5</th><th>b4</th><th>b3</th><th>b2</th><th>b1</th><th>b0</th></tr>
<tr><td>SW00D0</td><td>16</td><td>15</td><td>14</td><td>13</td><td>12</td><td>11</td><td>10</td><td>9</td><td>8</td><td>7</td><td>6</td><td>5</td><td>4</td><td>3</td><td>2</td><td>1</td></tr>
<tr><td>SW00D1</td><td>32</td><td>31</td><td>30</td><td>29</td><td>28</td><td>27</td><td>26</td><td>25</td><td>24</td><td>23</td><td>22</td><td>21</td><td>20</td><td>19</td><td>18</td><td>17</td></tr>
<tr><td>SW00D2</td><td>48</td><td>47</td><td>46</td><td>45</td><td>44</td><td>43</td><td>42</td><td>41</td><td>40</td><td>39</td><td>38</td><td>37</td><td>36</td><td>35</td><td>34</td><td>33</td></tr>
<tr><td>SW00D3</td><td>64</td><td>63</td><td>62</td><td>61</td><td>60</td><td>59</td><td>58</td><td>57</td><td>56</td><td>55</td><td>54</td><td>53</td><td>52</td><td>51</td><td>50</td><td>49</td></tr>
<tr><td>SW00D4</td><td>80</td><td>79</td><td>78</td><td>77</td><td>76</td><td>75</td><td>74</td><td>73</td><td>72</td><td>71</td><td>70</td><td>69</td><td>68</td><td>67</td><td>66</td><td>65</td></tr>
<tr><td>SW00D5</td><td>96</td><td>95</td><td>94</td><td>93</td><td>92</td><td>91</td><td>90</td><td>89</td><td>88</td><td>87</td><td>86</td><td>85</td><td>84</td><td>83</td><td>82</td><td>81</td></tr>
<tr><td>SW00D6</td><td>112</td><td>111</td><td>110</td><td>109</td><td>108</td><td>107</td><td>106</td><td>105</td><td>104</td><td>103</td><td>102</td><td>101</td><td>100</td><td>99</td><td>98</td><td>97</td></tr>
<tr><td>SW00D7</td><td>—</td><td>—</td><td>—</td><td>—</td><td>—</td><td>—</td><td>—</td><td>—</td><td>120</td><td>119</td><td>118</td><td>117</td><td>116</td><td>115</td><td>114</td><td>113</td></tr>
</table>
Each No. in the table represents a station No.
— is fixed to 0.
(Conditions)
• This register is enabled when "Baton pass status of own station" (SB0047) is off.
• When "Baton pass status of own station" (SB0047) is turned on, data prior to error is held.
• Stations higher than the maximum station No. are ignored.</td></tr>
</table>

<table>
<tr><th>No.</th><th>Name</th><th>Description</th></tr>
<tr><td>SW00E0
to
SW00E7</td><td>Temporary error invalid station setting status</td><td>Stores the temporary error invalid station setting status of each station.
0: Station other than a temporary error invalid station
1: Temporary error invalid station
<table>
<tr><th></th><th>b15</th><th>b14</th><th>b13</th><th>b12</th><th>b11</th><th>b10</th><th>b9</th><th>b8</th><th>b7</th><th>b6</th><th>b5</th><th>b4</th><th>b3</th><th>b2</th><th>b1</th><th>b0</th></tr>
<tr><td>SW00E0</td><td>16</td><td>15</td><td>14</td><td>13</td><td>12</td><td>11</td><td>10</td><td>9</td><td>8</td><td>7</td><td>6</td><td>5</td><td>4</td><td>3</td><td>2</td><td>1</td></tr>
<tr><td>SW00E1</td><td>32</td><td>31</td><td>30</td><td>29</td><td>28</td><td>27</td><td>26</td><td>25</td><td>24</td><td>23</td><td>22</td><td>21</td><td>20</td><td>19</td><td>18</td><td>17</td></tr>
<tr><td>SW00E2</td><td>48</td><td>47</td><td>46</td><td>45</td><td>44</td><td>43</td><td>42</td><td>41</td><td>40</td><td>39</td><td>38</td><td>37</td><td>36</td><td>35</td><td>34</td><td>33</td></tr>
<tr><td>SW00E3</td><td>64</td><td>63</td><td>62</td><td>61</td><td>60</td><td>59</td><td>58</td><td>57</td><td>56</td><td>55</td><td>54</td><td>53</td><td>52</td><td>51</td><td>50</td><td>49</td></tr>
<tr><td>SW00E4</td><td>80</td><td>79</td><td>78</td><td>77</td><td>76</td><td>75</td><td>74</td><td>73</td><td>72</td><td>71</td><td>70</td><td>69</td><td>68</td><td>67</td><td>66</td><td>65</td></tr>
<tr><td>SW00E5</td><td>96</td><td>95</td><td>94</td><td>93</td><td>92</td><td>91</td><td>90</td><td>89</td><td>88</td><td>87</td><td>86</td><td>85</td><td>84</td><td>83</td><td>82</td><td>81</td></tr>
<tr><td>SW00E6</td><td>112</td><td>111</td><td>110</td><td>109</td><td>108</td><td>107</td><td>106</td><td>105</td><td>104</td><td>103</td><td>102</td><td>101</td><td>100</td><td>99</td><td>98</td><td>97</td></tr>
<tr><td>SW00E7</td><td>—</td><td>—</td><td>—</td><td>—</td><td>—</td><td>—</td><td>—</td><td>—</td><td>120</td><td>119</td><td>118</td><td>117</td><td>116</td><td>115</td><td>114</td><td>113</td></tr>
</table>
Each No. in the table represents a station No.
— is fixed to 0.
(Conditions)
• This register is enabled when "Baton pass status of own station" (SB0047) is off.
• When "Baton pass status of own station" (SB0047) is turned on (error), data prior to error is held.
• This register is enabled only for normally operating stations in "Baton pass status of each station" (SW00A0 to SW00A7).
• Reserved stations and stations higher than the maximum station No. are ignored.</td></tr>
<tr><td>SW00E8
to
SW00EF</td><td>Station type match status</td><td>Stores the match status between the station type set in the master station and that of the slave station.
0: Station type match
1: Station type mismatch
<table>
<tr><th></th><th>b15</th><th>b14</th><th>b13</th><th>b12</th><th>b11</th><th>b10</th><th>b9</th><th>b8</th><th>b7</th><th>b6</th><th>b5</th><th>b4</th><th>b3</th><th>b2</th><th>b1</th><th>b0</th></tr>
<tr><td>SW00E8</td><td>16</td><td>15</td><td>14</td><td>13</td><td>12</td><td>11</td><td>10</td><td>9</td><td>8</td><td>7</td><td>6</td><td>5</td><td>4</td><td>3</td><td>2</td><td>1</td></tr>
<tr><td>SW00E9</td><td>32</td><td>31</td><td>30</td><td>29</td><td>28</td><td>27</td><td>26</td><td>25</td><td>24</td><td>23</td><td>22</td><td>21</td><td>20</td><td>19</td><td>18</td><td>17</td></tr>
<tr><td>SW00EA</td><td>48</td><td>47</td><td>46</td><td>45</td><td>44</td><td>43</td><td>42</td><td>41</td><td>40</td><td>39</td><td>38</td><td>37</td><td>36</td><td>35</td><td>34</td><td>33</td></tr>
<tr><td>SW00EB</td><td>64</td><td>63</td><td>62</td><td>61</td><td>60</td><td>59</td><td>58</td><td>57</td><td>56</td><td>55</td><td>54</td><td>53</td><td>52</td><td>51</td><td>50</td><td>49</td></tr>
<tr><td>SW00EC</td><td>80</td><td>79</td><td>78</td><td>77</td><td>76</td><td>75</td><td>74</td><td>73</td><td>72</td><td>71</td><td>70</td><td>69</td><td>68</td><td>67</td><td>66</td><td>65</td></tr>
<tr><td>SW00ED</td><td>96</td><td>95</td><td>94</td><td>93</td><td>92</td><td>91</td><td>90</td><td>89</td><td>88</td><td>87</td><td>86</td><td>85</td><td>84</td><td>83</td><td>82</td><td>81</td></tr>
<tr><td>SW00EE</td><td>112</td><td>111</td><td>110</td><td>109</td><td>108</td><td>107</td><td>106</td><td>105</td><td>104</td><td>103</td><td>102</td><td>101</td><td>100</td><td>99</td><td>98</td><td>97</td></tr>
<tr><td>SW00EF</td><td>—</td><td>—</td><td>—</td><td>—</td><td>—</td><td>—</td><td>—</td><td>—</td><td>120</td><td>119</td><td>118</td><td>117</td><td>116</td><td>115</td><td>114</td><td>113</td></tr>
</table>
Each No. in the table represents a station No.
— is fixed to 0.
(Conditions)
• This register is enabled only for the station in which "Network connection status" (SW00B8 to SW00BF) is on and is connected to the network.</td></tr>
<tr><td>SW00F0
to
SW00F7</td><td>CPU operating status of each station</td><td>Stores the CPU operating status of each station.
0: RUN, STEP-RUN
1: STOP, PAUSE, or a moderate or serious error occurring
<table>
<tr><th></th><th>b15</th><th>b14</th><th>b13</th><th>b12</th><th>b11</th><th>b10</th><th>b9</th><th>b8</th><th>b7</th><th>b6</th><th>b5</th><th>b4</th><th>b3</th><th>b2</th><th>b1</th><th>b0</th></tr>
<tr><td>SW00F0</td><td>16</td><td>15</td><td>14</td><td>13</td><td>12</td><td>11</td><td>10</td><td>9</td><td>8</td><td>7</td><td>6</td><td>5</td><td>4</td><td>3</td><td>2</td><td>1</td></tr>
<tr><td>SW00F1</td><td>32</td><td>31</td><td>30</td><td>29</td><td>28</td><td>27</td><td>26</td><td>25</td><td>24</td><td>23</td><td>22</td><td>21</td><td>20</td><td>19</td><td>18</td><td>17</td></tr>
<tr><td>SW00F2</td><td>48</td><td>47</td><td>46</td><td>45</td><td>44</td><td>43</td><td>42</td><td>41</td><td>40</td><td>39</td><td>38</td><td>37</td><td>36</td><td>35</td><td>34</td><td>33</td></tr>
<tr><td>SW00F3</td><td>64</td><td>63</td><td>62</td><td>61</td><td>60</td><td>59</td><td>58</td><td>57</td><td>56</td><td>55</td><td>54</td><td>53</td><td>52</td><td>51</td><td>50</td><td>49</td></tr>
<tr><td>SW00F4</td><td>80</td><td>79</td><td>78</td><td>77</td><td>76</td><td>75</td><td>74</td><td>73</td><td>72</td><td>71</td><td>70</td><td>69</td><td>68</td><td>67</td><td>66</td><td>65</td></tr>
<tr><td>SW00F5</td><td>96</td><td>95</td><td>94</td><td>93</td><td>92</td><td>91</td><td>90</td><td>89</td><td>88</td><td>87</td><td>86</td><td>85</td><td>84</td><td>83</td><td>82</td><td>81</td></tr>
<tr><td>SW00F6</td><td>112</td><td>111</td><td>110</td><td>109</td><td>108</td><td>107</td><td>106</td><td>105</td><td>104</td><td>103</td><td>102</td><td>101</td><td>100</td><td>99</td><td>98</td><td>97</td></tr>
<tr><td>SW00F7</td><td>—</td><td>—</td><td>—</td><td>—</td><td>—</td><td>—</td><td>—</td><td>—</td><td>120</td><td>119</td><td>118</td><td>117</td><td>116</td><td>115</td><td>114</td><td>113</td></tr>
</table>
Each No. in the table represents a station No.
— is fixed to 0.
(Conditions)
• This register is enabled when "Baton pass status of own station" (SB0047) is off.
• When "Baton pass status of own station" (SB0047) is turned on (error), data prior to error is held.
• This register is enabled only for normally operating stations in "Baton pass status of each station" (SW00A0 to SW00A7).
• Reserved stations and stations higher than the maximum station No. are ignored.</td></tr>
</table>

<table>
<tr><th>No.</th><th>Name</th><th>Description</th></tr>
<tr><td>SW00F8
to
SW00FF</td><td>Network No. match status</td><td>Stores the match status between the network No. of the master station and that of the slave station.
0: Network No. match
1: Network No. mismatch
<table>
<tr><th></th><th>b15</th><th>b14</th><th>b13</th><th>b12</th><th>b11</th><th>b10</th><th>b9</th><th>b8</th><th>b7</th><th>b6</th><th>b5</th><th>b4</th><th>b3</th><th>b2</th><th>b1</th><th>b0</th></tr>
<tr><td>SW00F8</td><td>16</td><td>15</td><td>14</td><td>13</td><td>12</td><td>11</td><td>10</td><td>9</td><td>8</td><td>7</td><td>6</td><td>5</td><td>4</td><td>3</td><td>2</td><td>1</td></tr>
<tr><td>SW00F9</td><td>32</td><td>31</td><td>30</td><td>29</td><td>28</td><td>27</td><td>26</td><td>25</td><td>24</td><td>23</td><td>22</td><td>21</td><td>20</td><td>19</td><td>18</td><td>17</td></tr>
<tr><td>SW00FA</td><td>48</td><td>47</td><td>46</td><td>45</td><td>44</td><td>43</td><td>42</td><td>41</td><td>40</td><td>39</td><td>38</td><td>37</td><td>36</td><td>35</td><td>34</td><td>33</td></tr>
<tr><td>SW00FB</td><td>64</td><td>63</td><td>62</td><td>61</td><td>60</td><td>59</td><td>58</td><td>57</td><td>56</td><td>55</td><td>54</td><td>53</td><td>52</td><td>51</td><td>50</td><td>49</td></tr>
<tr><td>SW00FC</td><td>80</td><td>79</td><td>78</td><td>77</td><td>76</td><td>75</td><td>74</td><td>73</td><td>72</td><td>71</td><td>70</td><td>69</td><td>68</td><td>67</td><td>66</td><td>65</td></tr>
<tr><td>SW00FD</td><td>96</td><td>95</td><td>94</td><td>93</td><td>92</td><td>91</td><td>90</td><td>89</td><td>88</td><td>87</td><td>86</td><td>85</td><td>84</td><td>83</td><td>82</td><td>81</td></tr>
<tr><td>SW00FE</td><td>112</td><td>111</td><td>110</td><td>109</td><td>108</td><td>107</td><td>106</td><td>105</td><td>104</td><td>103</td><td>102</td><td>101</td><td>100</td><td>99</td><td>98</td><td>97</td></tr>
<tr><td>SW00FF</td><td>—</td><td>—</td><td>—</td><td>—</td><td>—</td><td>—</td><td>—</td><td>—</td><td>120</td><td>119</td><td>118</td><td>117</td><td>116</td><td>115</td><td>114</td><td>113</td></tr>
</table>
Each No. in the table represents a station No.
— is fixed to 0.</td></tr>
<tr><td>SW0100
to
SW0107</td><td>CPU moderate/major error status of each station</td><td>Stores the moderate/major error or stop error occurrence status of each station.
When the target station is the master/local module, the occurrence status on the control CPU is stored.
0: No moderate/major error (stop error)
1: Moderate or serious error (stop error) occurring
<table>
<tr><th></th><th>b15</th><th>b14</th><th>b13</th><th>b12</th><th>b11</th><th>b10</th><th>b9</th><th>b8</th><th>b7</th><th>b6</th><th>b5</th><th>b4</th><th>b3</th><th>b2</th><th>b1</th><th>b0</th></tr>
<tr><td>SW0100</td><td>16</td><td>15</td><td>14</td><td>13</td><td>12</td><td>11</td><td>10</td><td>9</td><td>8</td><td>7</td><td>6</td><td>5</td><td>4</td><td>3</td><td>2</td><td>1</td></tr>
<tr><td>SW0101</td><td>32</td><td>31</td><td>30</td><td>29</td><td>28</td><td>27</td><td>26</td><td>25</td><td>24</td><td>23</td><td>22</td><td>21</td><td>20</td><td>19</td><td>18</td><td>17</td></tr>
<tr><td>SW0102</td><td>48</td><td>47</td><td>46</td><td>45</td><td>44</td><td>43</td><td>42</td><td>41</td><td>40</td><td>39</td><td>38</td><td>37</td><td>36</td><td>35</td><td>34</td><td>33</td></tr>
<tr><td>SW0103</td><td>64</td><td>63</td><td>62</td><td>61</td><td>60</td><td>59</td><td>58</td><td>57</td><td>56</td><td>55</td><td>54</td><td>53</td><td>52</td><td>51</td><td>50</td><td>49</td></tr>
<tr><td>SW0104</td><td>80</td><td>79</td><td>78</td><td>77</td><td>76</td><td>75</td><td>74</td><td>73</td><td>72</td><td>71</td><td>70</td><td>69</td><td>68</td><td>67</td><td>66</td><td>65</td></tr>
<tr><td>SW0105</td><td>96</td><td>95</td><td>94</td><td>93</td><td>92</td><td>91</td><td>90</td><td>89</td><td>88</td><td>87</td><td>86</td><td>85</td><td>84</td><td>83</td><td>82</td><td>81</td></tr>
<tr><td>SW0106</td><td>112</td><td>111</td><td>110</td><td>109</td><td>108</td><td>107</td><td>106</td><td>105</td><td>104</td><td>103</td><td>102</td><td>101</td><td>100</td><td>99</td><td>98</td><td>97</td></tr>
<tr><td>SW0107</td><td>—</td><td>—</td><td>—</td><td>—</td><td>—</td><td>—</td><td>—</td><td>—</td><td>120</td><td>119</td><td>118</td><td>117</td><td>116</td><td>115</td><td>114</td><td>113</td></tr>
</table>
Each No. in the table represents a station No.
— is fixed to 0.
(Conditions)
• This register is enabled when "Baton pass status of own station" (SB0047) is off.
• When "Baton pass status of own station" (SB0047) is turned on (error), data prior to error is held.
• This register is enabled only for normally operating stations in "Baton pass status of each station" (SW00A0 to SW00A7).
• Reserved stations and stations higher than the maximum station No. are ignored.</td></tr>
<tr><td>SW0108
to
SW010F</td><td>Station No. duplication occurrence status</td><td>Stores the station No. duplication occurrence status.
0: Station No. not duplicated
1: Station No. duplicated
<table>
<tr><th></th><th>b15</th><th>b14</th><th>b13</th><th>b12</th><th>b11</th><th>b10</th><th>b9</th><th>b8</th><th>b7</th><th>b6</th><th>b5</th><th>b4</th><th>b3</th><th>b2</th><th>b1</th><th>b0</th></tr>
<tr><td>SW0108</td><td>16</td><td>15</td><td>14</td><td>13</td><td>12</td><td>11</td><td>10</td><td>9</td><td>8</td><td>7</td><td>6</td><td>5</td><td>4</td><td>3</td><td>2</td><td>1</td></tr>
<tr><td>SW0109</td><td>32</td><td>31</td><td>30</td><td>29</td><td>28</td><td>27</td><td>26</td><td>25</td><td>24</td><td>23</td><td>22</td><td>21</td><td>20</td><td>19</td><td>18</td><td>17</td></tr>
<tr><td>SW010A</td><td>48</td><td>47</td><td>46</td><td>45</td><td>44</td><td>43</td><td>42</td><td>41</td><td>40</td><td>39</td><td>38</td><td>37</td><td>36</td><td>35</td><td>34</td><td>33</td></tr>
<tr><td>SW010B</td><td>64</td><td>63</td><td>62</td><td>61</td><td>60</td><td>59</td><td>58</td><td>57</td><td>56</td><td>55</td><td>54</td><td>53</td><td>52</td><td>51</td><td>50</td><td>49</td></tr>
<tr><td>SW010C</td><td>80</td><td>79</td><td>78</td><td>77</td><td>76</td><td>75</td><td>74</td><td>73</td><td>72</td><td>71</td><td>70</td><td>69</td><td>68</td><td>67</td><td>66</td><td>65</td></tr>
<tr><td>SW010D</td><td>96</td><td>95</td><td>94</td><td>93</td><td>92</td><td>91</td><td>90</td><td>89</td><td>88</td><td>87</td><td>86</td><td>85</td><td>84</td><td>83</td><td>82</td><td>81</td></tr>
<tr><td>SW010E</td><td>112</td><td>111</td><td>110</td><td>109</td><td>108</td><td>107</td><td>106</td><td>105</td><td>104</td><td>103</td><td>102</td><td>101</td><td>100</td><td>99</td><td>98</td><td>97</td></tr>
<tr><td>SW010F</td><td>—</td><td>—</td><td>—</td><td>—</td><td>—</td><td>—</td><td>—</td><td>—</td><td>120</td><td>119</td><td>118</td><td>117</td><td>116</td><td>115</td><td>114</td><td>113</td></tr>
</table>
Each No. in the table represents a station No.
— is fixed to 0.</td></tr>
</table>

<table>
<tr><th>No.</th><th>Name</th><th>Description</th></tr>
<tr><td>SW0110
to
SW0117</td><td>CPU minor error status of each station</td><td>Stores the minor error or continuation error occurrence status of each station.
When the target station is the master/local module, the occurrence status on the control CPU is stored.
0: Normal operation, or a moderate or serious error (stop error) occurring
1: Minor error (continuation error) occurring
<table>
<tr><th></th><th>b15</th><th>b14</th><th>b13</th><th>b12</th><th>b11</th><th>b10</th><th>b9</th><th>b8</th><th>b7</th><th>b6</th><th>b5</th><th>b4</th><th>b3</th><th>b2</th><th>b1</th><th>b0</th></tr>
<tr><td>SW0110</td><td>16</td><td>15</td><td>14</td><td>13</td><td>12</td><td>11</td><td>10</td><td>9</td><td>8</td><td>7</td><td>6</td><td>5</td><td>4</td><td>3</td><td>2</td><td>1</td></tr>
<tr><td>SW0111</td><td>32</td><td>31</td><td>30</td><td>29</td><td>28</td><td>27</td><td>26</td><td>25</td><td>24</td><td>23</td><td>22</td><td>21</td><td>20</td><td>19</td><td>18</td><td>17</td></tr>
<tr><td>SW0112</td><td>48</td><td>47</td><td>46</td><td>45</td><td>44</td><td>43</td><td>42</td><td>41</td><td>40</td><td>39</td><td>38</td><td>37</td><td>36</td><td>35</td><td>34</td><td>33</td></tr>
<tr><td>SW0113</td><td>64</td><td>63</td><td>62</td><td>61</td><td>60</td><td>59</td><td>58</td><td>57</td><td>56</td><td>55</td><td>54</td><td>53</td><td>52</td><td>51</td><td>50</td><td>49</td></tr>
<tr><td>SW0114</td><td>80</td><td>79</td><td>78</td><td>77</td><td>76</td><td>75</td><td>74</td><td>73</td><td>72</td><td>71</td><td>70</td><td>69</td><td>68</td><td>67</td><td>66</td><td>65</td></tr>
<tr><td>SW0115</td><td>96</td><td>95</td><td>94</td><td>93</td><td>92</td><td>91</td><td>90</td><td>89</td><td>88</td><td>87</td><td>86</td><td>85</td><td>84</td><td>83</td><td>82</td><td>81</td></tr>
<tr><td>SW0116</td><td>112</td><td>111</td><td>110</td><td>109</td><td>108</td><td>107</td><td>106</td><td>105</td><td>104</td><td>103</td><td>102</td><td>101</td><td>100</td><td>99</td><td>98</td><td>97</td></tr>
<tr><td>SW0117</td><td>—</td><td>—</td><td>—</td><td>—</td><td>—</td><td>—</td><td>—</td><td>—</td><td>120</td><td>119</td><td>118</td><td>117</td><td>116</td><td>115</td><td>114</td><td>113</td></tr>
</table>
Each No. in the table represents a station No.
— is fixed to 0.
(Conditions)
• This register is enabled when "Baton pass status of own station" (SB0047) is off.
• When "Baton pass status of own station" (SB0047) is turned on (error), data prior to error is held.
• This register is enabled only for normally operating stations in "Baton pass status of each station" (SW00A0 to SW00A7).
• Reserved stations and stations higher than the maximum station No. are ignored.</td></tr>
<tr><td>SW0130
to
SW0137</td><td>PORT2 current error frame reception status of each station (1)</td><td>Stores the station No. where a receive frame error line status caution level is currently occurring in the P2 side of each station.
0: A receive frame error line status caution level is not occurring.
1: A receive frame error line status caution level is occurring.
When "Clear communication error count" (SB0006) is turned on, the stored status is cleared.
<table>
<tr><th></th><th>b15</th><th>b14</th><th>b13</th><th>b12</th><th>b11</th><th>b10</th><th>b9</th><th>b8</th><th>b7</th><th>b6</th><th>b5</th><th>b4</th><th>b3</th><th>b2</th><th>b1</th><th>b0</th></tr>
<tr><td>SW0130</td><td>16</td><td>15</td><td>14</td><td>13</td><td>12</td><td>11</td><td>10</td><td>9</td><td>8</td><td>7</td><td>6</td><td>5</td><td>4</td><td>3</td><td>2</td><td>1</td></tr>
<tr><td>SW0131</td><td>32</td><td>31</td><td>30</td><td>29</td><td>28</td><td>27</td><td>26</td><td>25</td><td>24</td><td>23</td><td>22</td><td>21</td><td>20</td><td>19</td><td>18</td><td>17</td></tr>
<tr><td>SW0132</td><td>48</td><td>47</td><td>46</td><td>45</td><td>44</td><td>43</td><td>42</td><td>41</td><td>40</td><td>39</td><td>38</td><td>37</td><td>36</td><td>35</td><td>34</td><td>33</td></tr>
<tr><td>SW0133</td><td>64</td><td>63</td><td>62</td><td>61</td><td>60</td><td>59</td><td>58</td><td>57</td><td>56</td><td>55</td><td>54</td><td>53</td><td>52</td><td>51</td><td>50</td><td>49</td></tr>
<tr><td>SW0134</td><td>80</td><td>79</td><td>78</td><td>77</td><td>76</td><td>75</td><td>74</td><td>73</td><td>72</td><td>71</td><td>70</td><td>69</td><td>68</td><td>67</td><td>66</td><td>65</td></tr>
<tr><td>SW0135</td><td>96</td><td>95</td><td>94</td><td>93</td><td>92</td><td>91</td><td>90</td><td>89</td><td>88</td><td>87</td><td>86</td><td>85</td><td>84</td><td>83</td><td>82</td><td>81</td></tr>
<tr><td>SW0136</td><td>112</td><td>111</td><td>110</td><td>109</td><td>108</td><td>107</td><td>106</td><td>105</td><td>104</td><td>103</td><td>102</td><td>101</td><td>100</td><td>99</td><td>98</td><td>97</td></tr>
<tr><td>SW0137</td><td>—</td><td>—</td><td>—</td><td>—</td><td>—</td><td>—</td><td>—</td><td>—</td><td>120</td><td>119</td><td>118</td><td>117</td><td>116</td><td>115</td><td>114</td><td>113</td></tr>
</table>
Each No. in the table represents a station No.
— is fixed to 0.
(Conditions)
• This register is enabled when "Baton pass status of own station" (SB0047) is off.
• When "Baton pass status of own station" (SB0047) is turned on (error), data prior to error is held.
• This register is enabled only for normally operating stations in "Baton pass status of each station" (SW00A0 to SW00A7).</td></tr>
</table>

<table>
<tr><th>No.</th><th>Name</th><th>Description</th></tr>
<tr><td>SW0138
to
SW013F</td><td>PORT2 current error frame reception status of each station (2)</td><td>Stores the station No. where a receive frame error line status warning level is currently occurring in the P2 side of each station.
0: A receive frame error line status warning level is not occurring.
1: A receive frame error line status warning level is occurring.
When "Clear communication error count" (SB0006) is turned on, the stored status is cleared.
<table>
<tr><th></th><th>b15</th><th>b14</th><th>b13</th><th>b12</th><th>b11</th><th>b10</th><th>b9</th><th>b8</th><th>b7</th><th>b6</th><th>b5</th><th>b4</th><th>b3</th><th>b2</th><th>b1</th><th>b0</th></tr>
<tr><td>SW0138</td><td>16</td><td>15</td><td>14</td><td>13</td><td>12</td><td>11</td><td>10</td><td>9</td><td>8</td><td>7</td><td>6</td><td>5</td><td>4</td><td>3</td><td>2</td><td>1</td></tr>
<tr><td>SW0139</td><td>32</td><td>31</td><td>30</td><td>29</td><td>28</td><td>27</td><td>26</td><td>25</td><td>24</td><td>23</td><td>22</td><td>21</td><td>20</td><td>19</td><td>18</td><td>17</td></tr>
<tr><td>SW013A</td><td>48</td><td>47</td><td>46</td><td>45</td><td>44</td><td>43</td><td>42</td><td>41</td><td>40</td><td>39</td><td>38</td><td>37</td><td>36</td><td>35</td><td>34</td><td>33</td></tr>
<tr><td>SW013B</td><td>64</td><td>63</td><td>62</td><td>61</td><td>60</td><td>59</td><td>58</td><td>57</td><td>56</td><td>55</td><td>54</td><td>53</td><td>52</td><td>51</td><td>50</td><td>49</td></tr>
<tr><td>SW013C</td><td>80</td><td>79</td><td>78</td><td>77</td><td>76</td><td>75</td><td>74</td><td>73</td><td>72</td><td>71</td><td>70</td><td>69</td><td>68</td><td>67</td><td>66</td><td>65</td></tr>
<tr><td>SW013D</td><td>96</td><td>95</td><td>94</td><td>93</td><td>92</td><td>91</td><td>90</td><td>89</td><td>88</td><td>87</td><td>86</td><td>85</td><td>84</td><td>83</td><td>82</td><td>81</td></tr>
<tr><td>SW013E</td><td>112</td><td>111</td><td>110</td><td>109</td><td>108</td><td>107</td><td>106</td><td>105</td><td>104</td><td>103</td><td>102</td><td>101</td><td>100</td><td>99</td><td>98</td><td>97</td></tr>
<tr><td>SW013F</td><td>—</td><td>—</td><td>—</td><td>—</td><td>—</td><td>—</td><td>—</td><td>—</td><td>120</td><td>119</td><td>118</td><td>117</td><td>116</td><td>115</td><td>114</td><td>113</td></tr>
</table>
Each No. in the table represents a station No.
— is fixed to 0.
(Conditions)
• This register is enabled when "Baton pass status of own station" (SB0047) is off.
• When "Baton pass status of own station" (SB0047) is turned on (error), data prior to error is held.
• This register is enabled only for normally operating stations in "Baton pass status of each station" (SW00A0 to SW00A7).</td></tr>
<tr><td>SW0150
to
SW0157</td><td>PORT2 error frame reception detection status (1)</td><td>Stores the station No. where a receive frame error line status caution level has occurred in the P2 side of each station from power-on until the present.
0: A receive frame error line status caution level has not yet occurred.
1: A receive frame error line status caution level has occurred.
When "Clear communication error count" (SB0006) is turned on, the stored status is cleared.
<table>
<tr><th></th><th>b15</th><th>b14</th><th>b13</th><th>b12</th><th>b11</th><th>b10</th><th>b9</th><th>b8</th><th>b7</th><th>b6</th><th>b5</th><th>b4</th><th>b3</th><th>b2</th><th>b1</th><th>b0</th></tr>
<tr><td>SW0150</td><td>16</td><td>15</td><td>14</td><td>13</td><td>12</td><td>11</td><td>10</td><td>9</td><td>8</td><td>7</td><td>6</td><td>5</td><td>4</td><td>3</td><td>2</td><td>1</td></tr>
<tr><td>SW0151</td><td>32</td><td>31</td><td>30</td><td>29</td><td>28</td><td>27</td><td>26</td><td>25</td><td>24</td><td>23</td><td>22</td><td>21</td><td>20</td><td>19</td><td>18</td><td>17</td></tr>
<tr><td>SW0152</td><td>48</td><td>47</td><td>46</td><td>45</td><td>44</td><td>43</td><td>42</td><td>41</td><td>40</td><td>39</td><td>38</td><td>37</td><td>36</td><td>35</td><td>34</td><td>33</td></tr>
<tr><td>SW0153</td><td>64</td><td>63</td><td>62</td><td>61</td><td>60</td><td>59</td><td>58</td><td>57</td><td>56</td><td>55</td><td>54</td><td>53</td><td>52</td><td>51</td><td>50</td><td>49</td></tr>
<tr><td>SW0154</td><td>80</td><td>79</td><td>78</td><td>77</td><td>76</td><td>75</td><td>74</td><td>73</td><td>72</td><td>71</td><td>70</td><td>69</td><td>68</td><td>67</td><td>66</td><td>65</td></tr>
<tr><td>SW0155</td><td>96</td><td>95</td><td>94</td><td>93</td><td>92</td><td>91</td><td>90</td><td>89</td><td>88</td><td>87</td><td>86</td><td>85</td><td>84</td><td>83</td><td>82</td><td>81</td></tr>
<tr><td>SW0156</td><td>112</td><td>111</td><td>110</td><td>109</td><td>108</td><td>107</td><td>106</td><td>105</td><td>104</td><td>103</td><td>102</td><td>101</td><td>100</td><td>99</td><td>98</td><td>97</td></tr>
<tr><td>SW0157</td><td>—</td><td>—</td><td>—</td><td>—</td><td>—</td><td>—</td><td>—</td><td>—</td><td>120</td><td>119</td><td>118</td><td>117</td><td>116</td><td>115</td><td>114</td><td>113</td></tr>
</table>
Each No. in the table represents a station No.
— is fixed to 0.
(Conditions)
• This register is enabled when "Baton pass status of own station" (SB0047) is off.
• When "Baton pass status of own station" (SB0047) is turned on (error), data prior to error is held.
• This register is enabled only for normally operating stations in "Baton pass status of each station" (SW00A0 to SW00A7).</td></tr>
</table>

<table>
<tr><th>No.</th><th>Name</th><th>Description</th></tr>
<tr><td>SW0158
to
SW015F</td><td>PORT2 error frame reception detection status (2)</td><td>Stores the station No. where a receive frame error line status warning level has occurred in the P2 side of each station from power-on until the present.
0: A receive frame error line status warning level has not yet occurred.
1: A receive frame error line status warning level has occurred.
When "Clear communication error count" (SB0006) is turned on, the stored status is cleared.
<table>
<tr><th></th><th>b15</th><th>b14</th><th>b13</th><th>b12</th><th>b11</th><th>b10</th><th>b9</th><th>b8</th><th>b7</th><th>b6</th><th>b5</th><th>b4</th><th>b3</th><th>b2</th><th>b1</th><th>b0</th></tr>
<tr><td>SW0158</td><td>16</td><td>15</td><td>14</td><td>13</td><td>12</td><td>11</td><td>10</td><td>9</td><td>8</td><td>7</td><td>6</td><td>5</td><td>4</td><td>3</td><td>2</td><td>1</td></tr>
<tr><td>SW0159</td><td>32</td><td>31</td><td>30</td><td>29</td><td>28</td><td>27</td><td>26</td><td>25</td><td>24</td><td>23</td><td>22</td><td>21</td><td>20</td><td>19</td><td>18</td><td>17</td></tr>
<tr><td>SW015A</td><td>48</td><td>47</td><td>46</td><td>45</td><td>44</td><td>43</td><td>42</td><td>41</td><td>40</td><td>39</td><td>38</td><td>37</td><td>36</td><td>35</td><td>34</td><td>33</td></tr>
<tr><td>SW015B</td><td>64</td><td>63</td><td>62</td><td>61</td><td>60</td><td>59</td><td>58</td><td>57</td><td>56</td><td>55</td><td>54</td><td>53</td><td>52</td><td>51</td><td>50</td><td>49</td></tr>
<tr><td>SW015C</td><td>80</td><td>79</td><td>78</td><td>77</td><td>76</td><td>75</td><td>74</td><td>73</td><td>72</td><td>71</td><td>70</td><td>69</td><td>68</td><td>67</td><td>66</td><td>65</td></tr>
<tr><td>SW015D</td><td>96</td><td>95</td><td>94</td><td>93</td><td>92</td><td>91</td><td>90</td><td>89</td><td>88</td><td>87</td><td>86</td><td>85</td><td>84</td><td>83</td><td>82</td><td>81</td></tr>
<tr><td>SW015E</td><td>112</td><td>111</td><td>110</td><td>109</td><td>108</td><td>107</td><td>106</td><td>105</td><td>104</td><td>103</td><td>102</td><td>101</td><td>100</td><td>99</td><td>98</td><td>97</td></tr>
<tr><td>SW015F</td><td>—</td><td>—</td><td>—</td><td>—</td><td>—</td><td>—</td><td>—</td><td>—</td><td>120</td><td>119</td><td>118</td><td>117</td><td>116</td><td>115</td><td>114</td><td>113</td></tr>
</table>
Each No. in the table represents a station No.
— is fixed to 0.
(Conditions)
• This register is enabled when "Baton pass status of own station" (SB0047) is off.
• When "Baton pass status of own station" (SB0047) is turned on (error), data prior to error is held.
• This register is enabled only for normally operating stations in "Baton pass status of each station" (SW00A0 to SW00A7).</td></tr>
<tr><td>SW0170
to
SW0177</td><td>Parameter error status of each station</td><td>Stores the parameter error status of each station.
0: No error
1: Errors
<table>
<tr><th></th><th>b15</th><th>b14</th><th>b13</th><th>b12</th><th>b11</th><th>b10</th><th>b9</th><th>b8</th><th>b7</th><th>b6</th><th>b5</th><th>b4</th><th>b3</th><th>b2</th><th>b1</th><th>b0</th></tr>
<tr><td>SW0170</td><td>16</td><td>15</td><td>14</td><td>13</td><td>12</td><td>11</td><td>10</td><td>9</td><td>8</td><td>7</td><td>6</td><td>5</td><td>4</td><td>3</td><td>2</td><td>1</td></tr>
<tr><td>SW0171</td><td>32</td><td>31</td><td>30</td><td>29</td><td>28</td><td>27</td><td>26</td><td>25</td><td>24</td><td>23</td><td>22</td><td>21</td><td>20</td><td>19</td><td>18</td><td>17</td></tr>
<tr><td>SW0172</td><td>48</td><td>47</td><td>46</td><td>45</td><td>44</td><td>43</td><td>42</td><td>41</td><td>40</td><td>39</td><td>38</td><td>37</td><td>36</td><td>35</td><td>34</td><td>33</td></tr>
<tr><td>SW0173</td><td>64</td><td>63</td><td>62</td><td>61</td><td>60</td><td>59</td><td>58</td><td>57</td><td>56</td><td>55</td><td>54</td><td>53</td><td>52</td><td>51</td><td>50</td><td>49</td></tr>
<tr><td>SW0174</td><td>80</td><td>79</td><td>78</td><td>77</td><td>76</td><td>75</td><td>74</td><td>73</td><td>72</td><td>71</td><td>70</td><td>69</td><td>68</td><td>67</td><td>66</td><td>65</td></tr>
<tr><td>SW0175</td><td>96</td><td>95</td><td>94</td><td>93</td><td>92</td><td>91</td><td>90</td><td>89</td><td>88</td><td>87</td><td>86</td><td>85</td><td>84</td><td>83</td><td>82</td><td>81</td></tr>
<tr><td>SW0176</td><td>112</td><td>111</td><td>110</td><td>109</td><td>108</td><td>107</td><td>106</td><td>105</td><td>104</td><td>103</td><td>102</td><td>101</td><td>100</td><td>99</td><td>98</td><td>97</td></tr>
<tr><td>SW0177</td><td>—</td><td>—</td><td>—</td><td>—</td><td>—</td><td>—</td><td>—</td><td>—</td><td>120</td><td>119</td><td>118</td><td>117</td><td>116</td><td>115</td><td>114</td><td>113</td></tr>
</table>
Each No. in the table represents a station No.
— is fixed to 0.
(Conditions)
• This register is enabled when "Baton pass status of own station" (SB0047) is off.
• When "Baton pass status of own station" (SB0047) is turned on (error), data prior to error is held.
• This register is enabled only for normally operating stations in "Baton pass status of each station" (SW00A0 to SW00A7).
• Reserved stations and stations higher than the maximum station No. are ignored.</td></tr>
<tr><td>SW0180
to
SW0187</td><td>Reserved station cancel setting status</td><td>Stores the reserved station cancel setting status of each station.
0: No temporary cancel of the reserved station setting
1: Temporary cancel of the reserved station setting
<table>
<tr><th></th><th>b15</th><th>b14</th><th>b13</th><th>b12</th><th>b11</th><th>b10</th><th>b9</th><th>b8</th><th>b7</th><th>b6</th><th>b5</th><th>b4</th><th>b3</th><th>b2</th><th>b1</th><th>b0</th></tr>
<tr><td>SW0180</td><td>16</td><td>15</td><td>14</td><td>13</td><td>12</td><td>11</td><td>10</td><td>9</td><td>8</td><td>7</td><td>6</td><td>5</td><td>4</td><td>3</td><td>2</td><td>1</td></tr>
<tr><td>SW0181</td><td>32</td><td>31</td><td>30</td><td>29</td><td>28</td><td>27</td><td>26</td><td>25</td><td>24</td><td>23</td><td>22</td><td>21</td><td>20</td><td>19</td><td>18</td><td>17</td></tr>
<tr><td>SW0182</td><td>48</td><td>47</td><td>46</td><td>45</td><td>44</td><td>43</td><td>42</td><td>41</td><td>40</td><td>39</td><td>38</td><td>37</td><td>36</td><td>35</td><td>34</td><td>33</td></tr>
<tr><td>SW0183</td><td>64</td><td>63</td><td>62</td><td>61</td><td>60</td><td>59</td><td>58</td><td>57</td><td>56</td><td>55</td><td>54</td><td>53</td><td>52</td><td>51</td><td>50</td><td>49</td></tr>
<tr><td>SW0184</td><td>80</td><td>79</td><td>78</td><td>77</td><td>76</td><td>75</td><td>74</td><td>73</td><td>72</td><td>71</td><td>70</td><td>69</td><td>68</td><td>67</td><td>66</td><td>65</td></tr>
<tr><td>SW0185</td><td>96</td><td>95</td><td>94</td><td>93</td><td>92</td><td>91</td><td>90</td><td>89</td><td>88</td><td>87</td><td>86</td><td>85</td><td>84</td><td>83</td><td>82</td><td>81</td></tr>
<tr><td>SW0186</td><td>112</td><td>111</td><td>110</td><td>109</td><td>108</td><td>107</td><td>106</td><td>105</td><td>104</td><td>103</td><td>102</td><td>101</td><td>100</td><td>99</td><td>98</td><td>97</td></tr>
<tr><td>SW0187</td><td>—</td><td>—</td><td>—</td><td>—</td><td>—</td><td>—</td><td>—</td><td>—</td><td>120</td><td>119</td><td>118</td><td>117</td><td>116</td><td>115</td><td>114</td><td>113</td></tr>
</table>
Each No. in the table represents a station No.
— is fixed to 0.
(Conditions)
• This register is enabled when "Baton pass status of own station" (SB0047) is off.
• When "Baton pass status of own station" (SB0047) is turned on (error), data prior to error is held.
• This register is enabled only for normally operating stations in "Baton pass status of each station" (SW00A0 to SW00A7).
• Stations higher than the maximum station No. are ignored.</td></tr>
</table>

<table>
<tr><th>No.</th><th>Name</th><th>Description</th></tr>
<tr><td>SW0198</td><td>Link dedicated instructions processing result CH3</td><td>Stores the processing results of the link dedicated instruction that used channel 3 of the own station.
0: Completed normally
1 or greater: Completed with an error (Error code is stored.)</td></tr>
<tr><td>SW0199</td><td>Link dedicated instructions processing result CH4</td><td>Stores the processing results of the link dedicated instruction that used channel 4 of the own station.
0: Completed normally
1 or greater: Completed with an error (Error code is stored.)</td></tr>
<tr><td>SW019A</td><td>Link dedicated instructions processing result CH5</td><td>Stores the processing results of the link dedicated instruction that used channel 5 of the own station.
0: Completed normally
1 or greater: Completed with an error (Error code is stored.)</td></tr>
<tr><td>SW019B</td><td>Link dedicated instructions processing result CH6</td><td>Stores the processing results of the link dedicated instruction that used channel 6 of the own station.
0: Completed normally
1 or greater: Completed with an error (Error code is stored.)</td></tr>
<tr><td>SW019C</td><td>Link dedicated instructions processing result CH7</td><td>Stores the processing results of the link dedicated instruction that used channel 7 of the own station.
0: Completed normally
1 or greater: Completed with an error (Error code is stored.)</td></tr>
<tr><td>SW019D</td><td>Link dedicated instructions processing result CH8</td><td>Stores the processing results of the link dedicated instruction that used channel 8 of the own station.
0: Completed normally
1 or greater: Completed with an error (Error code is stored.)</td></tr>
<tr><td>SW01C0
to
SW01C7</td><td>Information of CC-Link IE Field Network synchronous communication function of each station</td><td>Stores the information about support or non-support of CC-Link IE Field Network synchronous communication function for each station.
0: Not supported
1: Supported
<table>
<tr><th></th><th>b15</th><th>b14</th><th>b13</th><th>b12</th><th>b11</th><th>b10</th><th>b9</th><th>b8</th><th>b7</th><th>b6</th><th>b5</th><th>b4</th><th>b3</th><th>b2</th><th>b1</th><th>b0</th></tr>
<tr><td>SW01C0</td><td>16</td><td>15</td><td>14</td><td>13</td><td>12</td><td>11</td><td>10</td><td>9</td><td>8</td><td>7</td><td>6</td><td>5</td><td>4</td><td>3</td><td>2</td><td>1</td></tr>
<tr><td>SW01C1</td><td>32</td><td>31</td><td>30</td><td>29</td><td>28</td><td>27</td><td>26</td><td>25</td><td>24</td><td>23</td><td>22</td><td>21</td><td>20</td><td>19</td><td>18</td><td>17</td></tr>
<tr><td>SW01C2</td><td>48</td><td>47</td><td>46</td><td>45</td><td>44</td><td>43</td><td>42</td><td>41</td><td>40</td><td>39</td><td>38</td><td>37</td><td>36</td><td>35</td><td>34</td><td>33</td></tr>
<tr><td>SW01C3</td><td>64</td><td>63</td><td>62</td><td>61</td><td>60</td><td>59</td><td>58</td><td>57</td><td>56</td><td>55</td><td>54</td><td>53</td><td>52</td><td>51</td><td>50</td><td>49</td></tr>
<tr><td>SW01C4</td><td>80</td><td>79</td><td>78</td><td>77</td><td>76</td><td>75</td><td>74</td><td>73</td><td>72</td><td>71</td><td>70</td><td>69</td><td>68</td><td>67</td><td>66</td><td>65</td></tr>
<tr><td>SW01C5</td><td>96</td><td>95</td><td>94</td><td>93</td><td>92</td><td>91</td><td>90</td><td>89</td><td>88</td><td>87</td><td>86</td><td>85</td><td>84</td><td>83</td><td>82</td><td>81</td></tr>
<tr><td>SW01C6</td><td>112</td><td>111</td><td>110</td><td>109</td><td>108</td><td>107</td><td>106</td><td>105</td><td>104</td><td>103</td><td>102</td><td>101</td><td>100</td><td>99</td><td>98</td><td>97</td></tr>
<tr><td>SW01C7</td><td>—</td><td>—</td><td>—</td><td>—</td><td>—</td><td>—</td><td>—</td><td>—</td><td>120</td><td>119</td><td>118</td><td>117</td><td>116</td><td>115</td><td>114</td><td>113</td></tr>
</table>
Each No. in the table represents a station No.
— is fixed to 0.
(Conditions)
• This register is enabled when "Baton pass status of own station" (SB0047) is off.
• When "Baton pass status of own station" (SB0047) is turned on (error), data prior to error is held.
• This register is enabled only for normally operating stations in "Baton pass status of each station" (SW00A0 to SW00A7).
• Stations higher than the maximum station No. are ignored.</td></tr>
<tr><td>SW01C8
to
SW01CF</td><td>Synchronous/ asynchronous operating status information of each station</td><td>Stores the information about operating status of CC-Link IE Field Network synchronous communication function for each station.
0: Asynchronous setting
1: Synchronous setting
Stations which are not executing an inter-module synchronous interrupt program because the CPU operating status is currently a status such as STOP, that is unable to execute the program, are also treated as an asynchronous setting.
<table>
<tr><th></th><th>b15</th><th>b14</th><th>b13</th><th>b12</th><th>b11</th><th>b10</th><th>b9</th><th>b8</th><th>b7</th><th>b6</th><th>b5</th><th>b4</th><th>b3</th><th>b2</th><th>b1</th><th>b0</th></tr>
<tr><td>SW01C8</td><td>16</td><td>15</td><td>14</td><td>13</td><td>12</td><td>11</td><td>10</td><td>9</td><td>8</td><td>7</td><td>6</td><td>5</td><td>4</td><td>3</td><td>2</td><td>1</td></tr>
<tr><td>SW01C9</td><td>32</td><td>31</td><td>30</td><td>29</td><td>28</td><td>27</td><td>26</td><td>25</td><td>24</td><td>23</td><td>22</td><td>21</td><td>20</td><td>19</td><td>18</td><td>17</td></tr>
<tr><td>SW01CA</td><td>48</td><td>47</td><td>46</td><td>45</td><td>44</td><td>43</td><td>42</td><td>41</td><td>40</td><td>39</td><td>38</td><td>37</td><td>36</td><td>35</td><td>34</td><td>33</td></tr>
<tr><td>SW01CB</td><td>64</td><td>63</td><td>62</td><td>61</td><td>60</td><td>59</td><td>58</td><td>57</td><td>56</td><td>55</td><td>54</td><td>53</td><td>52</td><td>51</td><td>50</td><td>49</td></tr>
<tr><td>SW01CC</td><td>80</td><td>79</td><td>78</td><td>77</td><td>76</td><td>75</td><td>74</td><td>73</td><td>72</td><td>71</td><td>70</td><td>69</td><td>68</td><td>67</td><td>66</td><td>65</td></tr>
<tr><td>SW01CD</td><td>96</td><td>95</td><td>94</td><td>93</td><td>92</td><td>91</td><td>90</td><td>89</td><td>88</td><td>87</td><td>86</td><td>85</td><td>84</td><td>83</td><td>82</td><td>81</td></tr>
<tr><td>SW01CE</td><td>112</td><td>111</td><td>110</td><td>109</td><td>108</td><td>107</td><td>106</td><td>105</td><td>104</td><td>103</td><td>102</td><td>101</td><td>100</td><td>99</td><td>98</td><td>97</td></tr>
<tr><td>SW01CF</td><td>—</td><td>—</td><td>—</td><td>—</td><td>—</td><td>—</td><td>—</td><td>—</td><td>120</td><td>119</td><td>118</td><td>117</td><td>116</td><td>115</td><td>114</td><td>113</td></tr>
</table>
Each No. in the table represents a station No.
— is fixed to 0.
(Conditions)
• This register is enabled when "Baton pass status of own station" (SB0047) is off.
• When "Baton pass status of own station" (SB0047) is turned on (error), data prior to error is held.
• This register is enabled only for normally operating stations in "Baton pass status of each station" (SW00A0 to SW00A7).
• Stations higher than the maximum station No. are ignored.</td></tr>
</table>

No.	Name	Description
SW01E9	Inter-module synchronization cycle over count	Stores the cumulative count that a link scan could not complete an Inter-module synchronization cycle. The stored count is cleared by turning off and on the power supply or resetting the CPU module. • 0: Cycle over not occurred • 1 to 65535: Cumulative number of times
SW01EA to SW01EB	Inter-module synchronization cycle setting value	Stores the setting value in "Inter-module Synchronous Setting" in the [Inter-module Synchronous Setting] tab of the "System Parameter" window. (Unit: μs) 0 is stored when the inter-module synchronization function is not used.

Appendix 5 Dedicated Instruction

This section describes dedicated instructions that can be used in the Simple Motion modules.

Point

For details on dedicated instructions, refer to the following.

📖MELSEC iQ-R Programming Manual (CPU Module Instructions, Standard Functions/Function Blocks)

Link dedicated instructions

The following table lists the instructions used for transient transmission to or from programmable controllers on other stations. Each link dedicated instruction allows access to a station on a network other than CC-Link IE Field Network. (Excluding the REMFR and REMTO instructions)

Instruction	Description
READ	Reads data from the word device of another station.
SREAD	Reads data from the word device of another station. (with completion device)
WRITE	Writes data in the word device of another station.
SWRITE	Writes data in the word device of another station. (with completion device)
SEND	Sends data to another station.
RECV	Reads the receive data from another station. (for main program)
RECVS	Reads the receive data from another station. (for interrupt program)
REQ	Requests the remote RUN/STOP to the CPU module on another station.
	Reads/writes clock data from/to another station.
REMFR	Reads data from the buffer memory in the intelligent device station/remote device station. (In units of words, 16-bit address specification)
REMTO	Writes data to the buffer memory in the intelligent device station/remote device station. (In units of words, 16-bit address specification)

Precautions

Do not write clock data to the remote head module or head module. Even when clock data is written, it will be overwritten by the clock data of the master station clock data via the network.

■Transient transmission range of the link dedicated instruction

In a single network system, communication with all stations on the network is possible.

In multi-network system, communications can be made with stations up to eight networks apart.

CC-Link dedicated instructions

The following table lists the instructions used for transient transmission with CC-Link IE Field Network-compliant devices.

Instruction	Description
RIRD	Reads the specified points of data from the target station device.
RIWT	Writes the specified points of data to the target station device.

■Transient transmission range of CC-Link dedicated instructions

Communication with all stations in the same network is possible.

Communication is not available with stations in other networks.

Precautions for dedicated instructions

This section describes precautions when using dedicated instructions.

Precautions for dedicated instructions (common)

■When changing data specified by dedicated instructions

Do not change any data (such as control data) until execution of the dedicated instruction is completed.

■When the dedicated instruction is not completed

Check whether the mode of the Simple Motion module is online.

A dedicated instruction cannot be executed when the mode is offline.

■When using the safety program

Dedicated instructions cannot be used in safety programs.

■When using the REMFR or REMTO instructions

When using the REMFR or REMTO instructions, configure an interlock with the following module labels.

- "Data link error status of own station" (SB0049)
- "Data link status of each station" (SW00B0 to SW00B7) of the target station

Check that the data link status is normal. ("Data link error status of own station" (SB0049) and "Data link status of each station" (SW00B0 to SW00B7) of the target station are off.)

Precautions for link dedicated instructions

The following describes precautions when executing multiple link dedicated instructions simultaneously.

■Channel of the link dedicated instructions

When executing multiple link dedicated instructions simultaneously, check that the channels for the instructions are not duplicated. Link dedicated instructions with the same channel cannot be executed simultaneously. To use the same channel for multiple link dedicated instructions, configure an interlock so that a instruction is executed after completion of another.

Appendix 6 Processing Time

The processing time of CC-Link IE Field Network consists of the time components below.

Sequence scan time + Link scan time + Slave station processing time = Transmission delay time

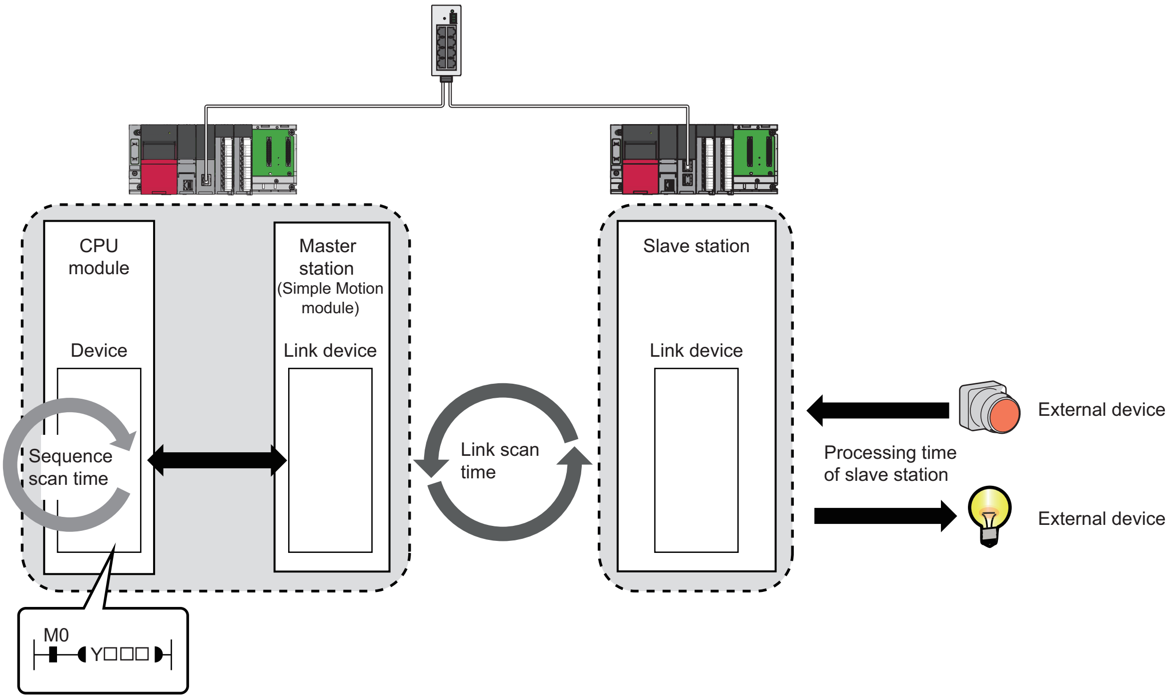
CPU module
Device
Sequence scan time
Master station (Simple Motion module)
Link device
Link scan time
Slave station
Link device
Processing time of slave station
External device
External device
M0
Y□□□

- Sequence scan time: 📖MELSEC iQ-R CPU Module User's Manual (Application)
- Slave station processing time: 📖Manual for the slave station used

Link scan time

The following is the formula to calculate the link scan time. (When "Link Scan Mode" under "Supplementary Cyclic Settings" in "Application Settings" is "Sequence Scan Asynchronous")

$LS = \{Np + (Ns \times Ka) + (Nt \times Kb) + Kc + Kd\} \div 1000 + \alpha p$ [ms]

Item	Communication mode	
	Normal	High-speed
Np	{(Total number of points of "RX/RY Setting" set in "Network Configuration Settings" of "Basic Settings") ÷ 4 + (Total number of points of "RWw/RWr Setting" set in "Network Configuration Settings" of "Basic Settings") × 4} × (High-speed: 0.0073, Normal: 0.039)	
Ns	Number of actually connected stations which are motion mode	
Nt	Number of actually connected stations which are other than motion mode	
Ka	45	26
Kb	24	13
Kc	420	300
Kd	The sum of the processing time factor (following values) of all safety stations in the network. 0 when the safety communication function is not used 50.1 × (Sa - 1) + 9.5 × (Sb - 1) + Sc Sa: Number of safety communication settings with local stations Sb: Number of safety communication settings with remote device stations and motion mode stations Sc: When including local station: 0, When including remote device station: 30, When including motion mode station: 120	The sum of the processing time factor (following values) of all safety stations in the network. 0 when the safety communication function is not used 5 × (Sa - 1) + 0.1 × (Sb - 1) + Sc Sa: Number of safety communication settings with local stations Sb: Number of safety communication settings with remote device stations and motion mode stations Sc: When including local station: 10, When including remote device station: 10, When including motion mode station: 80
αp	Positioning operation time	

Point

- The calculated result by this formula is rough standard values. For the actual link scan time, check the parameters and the control details that are used.
- When the operation cycle over or the synchronization cycle over occurs, review the processing details or reduce the number of stations that are used.

Cyclic transmission delay time

The following are the formulas to calculate cyclic transmission delay time.

Between the master station and an intelligent device station/remote device station

■Master station (RX, RWr) ← Intelligent device station/remote device station (input)

The following time is shown:

- The time between a signal input to the intelligent device station/remote device station and the CPU module device of the master station turning on or off
- The time between data input to the intelligent device station/remote device station and the data being stored in the CPU module device of the master station

Calculation value	Station-based block data assurance	No station-based block data assurance
Normal value	(SM × 1) + (CT × n1) + Rio	(SM × 1) + (CT × 1) + Rio
Maximum value	(SM × 1) + (CT × (n1 + 1)) + Rio	(SM × 1) + (CT × 2) + Rio

SM: Master station sequence scan time

CT: Inter-module synchronization cycle

n1: SM ÷ CT (Round up the calculated value to the nearest integer.)

Rio: Intelligent device station/remote device station processing time (📖Manual for the intelligent device station/remote device station used)

■Master station (RY, RWw) → Intelligent device station/remote device station (output)

The following time is shown:

- The time between the CPU module device of the master station turning on or off and the output of the intelligent device station/remote device station being turning on or off
- The time between data set to the CPU module device of the master station and the data output to the intelligent device station/remote device station

Calculation value	Station-based block data assurance	No station-based block data assurance
Normal value	(SM × n2) + (CT × n1) + Rio	(SM × 1) + (CT × 1) + Rio
Maximum value	(SM × n2) + (CT × 2) + Rio	(SM × 2) + (CT × 2) + Rio

SM: Master station sequence scan time

CT: Inter-module synchronization cycle

n2: CT ÷ SM (Round up the calculated value to the nearest integer.)

Rio: Intelligent device station/remote device station processing time (📖Manual for the intelligent device station/remote device station used)

Master station and local stations

■Master station (RX) ← Local station (RY)

Shows the time after the local station CPU module device is turned on or off until the master station CPU module device is turned on or off.

(m = 1)

Calculation value	Station-based block data assurance	No station-based block data assurance
Normal value	(SM × 1) + (CT × k) + (SL × 1)	(SM × 1) + (CT × 1) + (SL × 1)
Maximum value	(SM × 1) + (CT × (k + n1)) + (SL × 1)	(SM × 1) + (CT × 2) + (SL × 1)

(m = 2 to 4)

Calculation value	Station-based block data assurance	No station-based block data assurance
Normal value	(SM × 1) + (CT × m × k) + (SL × n)	(SM × 1) + (CT × m) + (SL × n)
Maximum value	(SM × 1) + (CT × m × (k + n1)) + (SL × (n + 1))	(SM × 1) + (CT × (n1 + 1)) + (SL × 2)

SM: Master station sequence scan time

CT: Inter-module synchronization cycle

SL: Local station sequence scan time

n: (CT × m) ÷ SL (Round up the calculated value to the nearest integer.)

n1: SM ÷ CT (Round up the calculated value to the nearest integer.)

k: SL ÷ (CT × m) (Round up the calculated value to the nearest integer.)

m: Constant of "RWw/RWr Setting" set for the local station in "Network Configuration Settings" of "Basic Settings"

Item	Number of points in "RWw/RWr Setting"			
	0 to 256 words	257 to 512 words	513 to 768 words	769 to 1024 words
m	1	2	3	4

■Master station (RY) → Local station (RX)

Shows the time after the master station CPU module device is turned on or off until the local station CPU module device is turned on or off.

Calculation value	Station-based block data assurance	No station-based block data assurance
Normal value	(SM × 1) + (CT × n3) + (SL × 1)	(SM × 1) + (CT × 1) + (SL × 1)
Maximum value	(SM × 1) + (CT × (n3 + 1)) + (SL × 2)	(SM × 1) + (CT × 2) + (SL × 2)

SM: Master station sequence scan time

CT: Inter-module synchronization cycle

SL: Local station sequence scan time

n3: SL ÷ CT (Round up the calculated value to the nearest integer.)

■Master station (RWr) ← Local station (RWw)

Shows the time after data is set in the local station CPU module device until the data is stored in the master station CPU module device.

(m = 1)

Calculation value	Station-based block data assurance	No station-based block data assurance
Normal value	(SM × 1) + (CT × k) + (SL × 1)	(SM × 1) + (CT × 1) + (SL × 1)
Maximum value	(SM × 2) + (CT × (k + n1)) + (SL × 1)	(SM × 2) + (CT × 2) + (SL × 1)

(m = 2 to 4)

Calculation value	Station-based block data assurance	No station-based block data assurance
Normal value	(SM × 1) + (CT × m × k) + (SL × n)	(SM × 1) + (CT × m) + (SL × n)
Maximum value	(SM × 2) + (CT × m × (k + n1)) + (SL × (n + 1))	(SM × 2) + (CT × (n1 + 1)) + (SL × 2)

SM: Master station sequence scan time

CT: Inter-module synchronization cycle

SL: Local station sequence scan time

n: (CT × m) ÷ SL (Round up the calculated value to the nearest integer.)

n1: SM ÷ CT (Round up the calculated value to the nearest integer.)

k: SL ÷ (CT × m) (Round up the calculated value to the nearest integer.)

m: Constant of "RWw/RWr Setting" set for the local station in "Network Configuration Settings" of "Basic Settings"

Item	Number of points in "RWw/RWr Setting"			
	0 to 256 words	257 to 512 words	513 to 768 words	769 to 1024 words
m	1	2	3	4

■Master station (RWw) → Local station (RWr)

Shows the time after data is set in the master station CPU module device until the data is stored in the local station CPU module device.

Calculation value	Station-based block data assurance	No station-based block data assurance
Normal value	(SM × 1) + (CT × n3) + (SL × 1)	(SM × 1) + (CT × 1) + (SL × 1)
Maximum value	(SM × 1) + (CT × (n3 + 1)) + (SL × 2)	(SM × 1) + (CT × 2) + (SL × 2)

SM: Master station sequence scan time

CT: Inter-module synchronization cycle

SL: Local station sequence scan time

n3: SL ÷ CT (Round up the calculated value to the nearest integer.)

Interlink transmission time

The following is the formula to calculate the time required for interlink transmission. Interlink transmission does not affect the sequence scan time.

Refer to the following for the case that the transfer source module is a master/local module.

📖MELSEC iQ-R CC-Link IE Field Network User's Manual (Application)

Interlink transmission time to completely transmit all set points

α_{DL} = KM4 × ((RX + RY) ÷ 16 + RWr + RWw) [ms]

α_{DL}: Interlink transmission time

RX: Total number of source "RX/LB" points set in "Interlink Transmission Settings" of "Application Settings"

RY: Total number of source "LB/RY" points set in "Interlink Transmission Settings" of "Application Settings"

RWr: Total number of source "RWr/LW" points set in "Interlink Transmission Settings" of "Application Settings"

RWw: Total number of source "LW/RWw" points set in "Interlink Transmission Settings" of "Application Settings"

- Constant (KM4)

Base unit to which the network module is mounted		**KM4 (×10^{-3})**
Transfer source	**Transfer destination**	
Main base unit	Main base unit	0.470
Main base unit	Extension base unit	0.478
Extension base unit	Main base unit	0.483
Extension base unit	Extension base unit	0.489

Precautions

The interlink transmission time may become longer due to the following causes.

- Communication with the engineering tool (CC-Link IE Field Network diagnostics, module diagnostics, etc.)
- Execution of a link dedicated instruction
- Link refresh
- Interlink transmission between other units

Transmission delay time of safety communications

The following are the formulas to calculate transmission delay time of safety communications.

Transmission delay time

■Master station (safety station) or local station (safety station) ↔ Local station (safety station)

The following table lists the time between a safety device of the Safety CPU on the sending station turning on or off and that on the receiving station turning on or off.

Calculation value	Formula
Normal value	SCsnd + LS + SCrcv + TMsnd
Maximum value	SCsnd + (LS × 2) + (SCrcv × 2) + TMsnd

SCsnd: Safety cycle time of the sending station (📖MELSEC iQ-R CPU Module User's Manual (Application))
LS: Link scan time (☞ Page 168 Link scan time)
SCrcv: Safety cycle time of the receiving station (📖MELSEC iQ-R CPU Module User's Manual (Application))
TMsnd: Transmission interval monitoring time of the sending station (☞ Page 174 Transmission interval monitoring time)

■Master station (safety station) ← Remote device station (safety station) (input)

The following table lists the time between a signal input to the remote device station (safety station) and a safety device of the Safety CPU on the master station (safety station) turning on or off.

Calculation value	Formula
Normal value	SCmst + LS + SRref + TMrmt + SRin
Maximum value	(SCmst × 2) + (LS × 2) + SRref + TMrmt + SRin

SCmst: Safety cycle time of the master station (safety station) (📖MELSEC iQ-R CPU Module User's Manual (Application))
LS: Link scan time (☞ Page 168 Link scan time)
SRref: Safety remote station refresh response processing time (📖Manual for the remote device station used)
TMrmt: Transmission interval monitoring time of the remote device station (safety station) (📖Manual for the remote device station used)
SRin: Safety remote station input response time (📖Manual for the remote device station used)

■Master station (safety station) → Remote device station (safety station) (output)

The following table lists the time between a safety device of the Safety CPU on the master station (safety station) turning on or off and the output of the remote device station (safety station) turning on or off.

Calculation value	Formula
Normal value	SCmst + LS + SRref + TMmst + SRout
Maximum value	SCmst + (LS × 2) + (SRref × 2) + TMmst + SRout

SCmst: Safety cycle time of the master station (safety station) (📖MELSEC iQ-R CPU Module User's Manual (Application))
LS: Link scan time (☞ Page 168 Link scan time)
SRref: Safety remote station refresh response processing time (📖Manual for the remote device station used)
TMmst: Transmission interval monitoring time of the master station (safety station) (☞ Page 174 Transmission interval monitoring time)
SRout: Safety remote station output response time (📖Manual for the remote device station used)

Safety response time

The safety response time is the maximum value of the time between a safety input of the remote device station (safety station) turning off and a safety output of the remote device station (safety station) turning off (including an error detection time).
For calculation method of the safety response time, refer to the following.
📖Mitsubishi Safety Programmable Controller MELSEC iQ-R Series Machinery Directive (2006/42/EC) Compliance

Transmission interval monitoring time

The value of transmission interval monitoring time set in the Simple Motion module must satisfy all of the following conditions.

Communication destination	Condition
Master station (safety station) or local station (safety station)	• $\text{TM} \geq \text{SCown} \times 3$ • $\text{TM} \geq \text{SCoth} \times 2 + \text{LS} \times 2$
Remote device station (safety station)	• $\text{TM} \geq \text{SCown} \times 3$ • $\text{TM} \geq \text{SRref} \times 2 + \text{LS} \times 2$

TM: Transmission interval monitoring time
SCown: Safety cycle time of the own station (🕮MELSEC iQ-R CPU Module User's Manual (Application))
SCoth: Safety cycle time of the communication destination (🕮MELSEC iQ-R CPU Module User's Manual (Application))
LS: Link scan time (☞ Page 168 Link scan time)
SRref: Safety remote station refresh response processing time of the communication destination (🕮Manual for the remote device station used)

Point

- Calculate the link scan time used for calculation of the transmission interval monitoring time in accordance with the conditions of the system used. If disconnection and return of stations are not considered in a system using the Safety CPU, transmission interval monitoring time can be shortened by setting Kd (maximum data link processing time when the station is disconnected from or returned to the network) to 0. However, the Safety CPU may detect a safety communication timeout if the station is disconnected or returned. If the Safety CPU detects a safety communication timeout, change the transmission interval monitoring time to a greater value.
- If the Safety CPU detects a safety communication timeout, check that the transmission interval monitoring time satisfies the above formula.
- When the transmission interval monitoring time has changed, the safety refresh monitoring time must also be changed to meet the conditions specified for the safety refresh monitoring time. (☞ Page 175 Safety refresh monitoring time)

Safety refresh monitoring time

Set safety refresh monitoring time at the Active side station.

Set a value that satisfies all of the following conditions.

Condition

- $\text{RM} \geq \text{TMact} + (\text{TMpas} \div 2) + (\text{LS} \times 2) - \text{a}$
- $\text{RM} \geq (\text{TMact} \div 2) + \text{TMpas} + (\text{LS} \times 2) - \text{c}$
- $\text{RM} > \text{TMact}$
- $\text{RM} > \text{TMpas}$

RM: Safety refresh monitoring time

TMact: Transmission interval monitoring time of the Active side (☞ Page 174 Transmission interval monitoring time)

TMpas: Transmission interval monitoring time of the Passive side (☞ Page 174 Transmission interval monitoring time)

LS: Link scan time (☞ Page 168 Link scan time)

a: TMact - b (enables only when the RJ71GF11-T2 or RD77GF is Active side. Otherwise this value is 0.)

b: A smallest multiple of safety cycle time which is greater than TMact ÷ 2

c: TMpas -d (enabled only when the RJ71GF11-T2, RD77GF or NZ2GFSS2-32D is on the Passive side. Otherwise this value is 0.)

d: A smallest multiple of safety cycle time (safety refresh response processing time for the NZ2GFSS2-32D) which is greater than TMpas ÷ 2

Ex.

Calculation example of b when the transmission interval monitoring time (TMact) is 24 ms and the safety cycle time is 10 ms.

$24 \div 2 = 12$

The value of b is 20, the smallest multiple of safety cycle time (10 ms) which is greater than 12.

Point

- Calculate the link scan time used in the calculation of the safety refresh monitoring time in accordance with the conditions of the system used. If disconnection and return of stations are not considered in a system using the Safety CPU, safety refresh monitoring time and safety response time can be shortened by setting Kd (maximum data link processing time when the station is disconnected from or returned to the network) to 0. However, the Safety CPU may detect a safety communication timeout if the station is disconnected or returned. If the Safety CPU detects a safety communication timeout, change the safety refresh monitoring time to a greater value.
- The Safety CPU may detect a safety communication timeout if the safety communications are affected by noise. If required, add an integral multiple of ((TMact ÷ 2) + (TMpas ÷ 2)) to the safety refresh monitoring time.

Appendix 7 Differences in Cyclic Transmission Modes

This section describes the differences in "Communication Mode" for the Simple Motion module. Refer to the information of each mode to select "Communication Mode".

Differences in performance specifications

Item	Normal	High-speed
Maximum number of RWw send points per master operating station	1024 points, 2048 bytes	256 points, 512 bytes
Maximum number of RWw send points per local station		
Maximum number of transient transmissions per link scan	4 + slave stations × 1.5	4

MEMO

INDEX

0 to 9

32-bit data assurance 25

B

Baton pass. 13

C

Cable test. 115
CC-Link dedicated instructions 165
CC-Link IE Field Network diagnostics 104
Communication test 37
Control CPU 13
CPU module (built-in Ethernet port part) 13
Cyclic transmission 13

D

Data link 13
Data Link Station Setting 74
Dedicated instruction. 13
Device 13
Diagnostic items 104
Diagnostics window. 109
Disconnection. 13

E

Engineering tool 13
Error Information. 102

G

Global label 13

I

Intelligent device station. 13

L

Link dedicated instructions 165
Link device. 13
Link refresh 13
link scan time 13
Link special register (SW) 13
Link special relay (SB). 13
Link Start/Stop 116
Local station. 13

M

Master operating station 13
Master station. 13
Master/local module 13
Module Information List 102

N

Network module 14
Network Status. 110

O

Output Hold/Clear Setting during CPU STOP. 74

R

RAS 14
Relay station 14
Remote device station. 14
Remote head module .14
Remote I/O station 14
Remote input (RX) 14
Remote Operation 123
Remote output (RY) .14
Remote register (RWr) 14
Remote register (RWw). 14
Reserved station 14
Reserved Station Function Enable 118
Return. 14
RnENCPU 14
RnENCPU (CPU part). 14
RnENCPU (network part) 14
Routing 14
RWw/RWr Setting. 67
RX/RY Setting 67

S

Safety CPU 14
Seamless communication 14
Select Diagnostics Destination 109
Selected Station Communication Status Monitor .110
Sequence Scan Asynchronous 74
Simple Motion module. 14
Slave station 14
Station-based block data assurance 26,74
Submaster operating station 14
Submaster station. 15
Supplementary Function 102
System switching 15

T

Transient transmission 15

MEMO

REVISIONS

*The manual number is given on the bottom left of the back cover.

Revision date	*Manual number	Description
March 2016	IB(NA)-0300307ENG-A	First edition
December 2016	IB(NA)-0300307ENG-B	■Added models RD77GF32 ■Added functions Safety communication function, Normal mode setting of communication mode, iQ Sensor Solution data backup/restoration function ■Added or modified parts SAFETY PRECAUTIONS, INTRODUCTION, TERMS, Section 1.3, 1.4, 1.5, 1.6, 2.2, 2.3, 2.4, 3.1, 3.2, 4.1, 4.2, 4.3, 4.4, 4.5, 4.6, Appendix 2, 3, 4, 5, 6, 7
June 2018	IB(NA)-0300307ENG-C	■Added functions Improvements on CC-Link IE Field Network diagnostics ■Added or modified parts SAFETY PRECAUTIONS, RELEVANT MANUALS, Section 1.3, 1.5, 1.6, 2.2, 2.3, 2.4, 3.1, 3.2, 4.3, 4.4, 4.5, 4.6, Appendix 2, 3, 4, 5, 6
November 2022	IB(NA)-0300307ENG-D	■Added or modified parts SAFETY PRECAUTIONS, WARRANTY, TRADEMARKS

Japanese manual number: IB-0300306-E

This manual confers no industrial property rights or any rights of any other kind, nor does it confer any patent licenses. Mitsubishi Electric Corporation cannot be held responsible for any problems involving industrial property rights which may occur as a result of using the contents noted in this manual.

© 2016 MITSUBISHI ELECTRIC CORPORATION

WARRANTY

Warranty

1. Warranty period and coverage

We will repair any failure or defect hereinafter referred to as "failure" in our FA equipment hereinafter referred to as the "Product" arisen during warranty period at no charge due to causes for which we are responsible through the distributor from which you purchased the Product or our service provider. However, we will charge the actual cost of dispatching our engineer for an on-site repair work on request by customer in Japan or overseas countries. We are not responsible for any on-site readjustment and/or trial run that may be required after a defective unit is repaired or replaced.

[Term]

For terms of warranty, please contact your original place of purchase.

[Limitations]

(1) You are requested to conduct an initial failure diagnosis by yourself, as a general rule.
It can also be carried out by us or our service company upon your request and the actual cost will be charged. However, it will not be charged if we are responsible for the cause of the failure.

(2) This limited warranty applies only when the condition, method, environment, etc. of use are in compliance with the terms and conditions and instructions that are set forth in the instruction manual and user manual for the Product and the caution label affixed to the Product.

(3) Even during the term of warranty, the repair cost will be charged on you in the following cases;

1. a failure caused by your improper storing or handling, carelessness or negligence, etc., and a failure caused by your hardware or software problem
2. a failure caused by any alteration, etc. to the Product made on your side without our approval
3. a failure which may be regarded as avoidable, if your equipment in which the Product is incorporated is equipped with a safety device required by applicable laws and has any function or structure considered to be indispensable according to a common sense in the industry
4. a failure which may be regarded as avoidable if consumable parts designated in the instruction manual, etc. are duly maintained and replaced
5. any replacement of consumable parts (battery, fan, smoothing capacitor, etc.)
6. a failure caused by external factors such as inevitable accidents, including without limitation fire and abnormal fluctuation of voltage, and acts of God, including without limitation earthquake, lightning and natural disasters
7. a failure generated by an unforeseeable cause with a scientific technology that was not available at the time of the shipment of the Product from our company
8. any other failures which we are not responsible for or which you acknowledge we are not responsible for

2. Term of warranty after the stop of production

(1) We may accept the repair at charge for another seven (7) years after the production of the product is discontinued. The announcement of the stop of production for each model can be seen in our Sales and Service, etc.

(2) Please note that the Product (including its spare parts) cannot be ordered after its stop of production.

3. Service in overseas countries

Our regional FA Center in overseas countries will accept the repair work of the Product. However, the terms and conditions of the repair work may differ depending on each FA Center. Please ask your local FA center for details.

4. Exclusion of loss in opportunity and secondary loss from warranty liability

Regardless of the gratis warranty term, Mitsubishi shall not be liable for compensation to:

(1) Damages caused by any cause found not to be the responsibility of Mitsubishi.

(2) Loss in opportunity, lost profits incurred to the user by Failures of Mitsubishi products.

(3) Special damages and secondary damages whether foreseeable or not, compensation for accidents, and compensation for damages to products other than Mitsubishi products.

(4) Replacement by the user, maintenance of on-site equipment, start-up test run and other tasks.

5. Change of Product specifications

Specifications listed in our catalogs, manuals or technical documents may be changed without notice.

6. Application and use of the Product

(1) For the use of our Simple motion module, its applications should be those that may not result in a serious damage even if any failure or malfunction occurs in the Simple motion module, and a backup or fail-safe function should operate on an external system to the Simple motion module when any failure or malfunction occurs.

(2) Our Simple motion module is designed and manufactured as a general purpose product for use at general industries.
Therefore, applications substantially influential on the public interest for such as atomic power plants and other power plants of electric power companies, and also which require a special quality assurance system, including applications for railway companies and government or public offices are not recommended, and we assume no responsibility for any failure caused by these applications when used.
In addition, applications which may be substantially influential to human lives or properties for such as airlines, medical treatments, railway service, incineration and fuel systems, man-operated material handling equipment, entertainment machines, safety machines, etc. are not recommended, and we assume no responsibility for any failure caused by these applications when used.
We will review the acceptability of the abovementioned applications, if you agree not to require a specific quality for a specific application. Please contact us for consultation.

(3) Mitsubishi shall have no responsibility or liability for any problems involving programmable controller trouble and system trouble caused by DoS attacks, unauthorized access, computer viruses, and other cyberattacks.

TRADEMARKS

Microsoft and Windows are either registered trademarks or trademarks of Microsoft Corporation in the United States and/or other countries.

The company names, system names and product names mentioned in this manual are either registered trademarks or trademarks of their respective companies.

In some cases, trademark symbols such as '™' or '®' are not specified in this manual.

IB(NA)-0300307ENG-D(2211)MEE
MODEL: RD77-U-NET-E
MODEL CODE: 1XB026

MITSUBISHI ELECTRIC CORPORATION

HEAD OFFICE : TOKYO BUILDING, 2-7-3 MARUNOUCHI, CHIYODA-KU, TOKYO 100-8310, JAPAN
NAGOYA WORKS : 1-14 , YADA-MINAMI 5-CHOME , HIGASHI-KU, NAGOYA , JAPAN

When exported from Japan, this manual does not require application to the Ministry of Economy, Trade and Industry for service transaction permission.

Specifications subject to change without notice.