MITSUBISHI
PROGRAMMABLE CONTROLLERS
MELSEC-F

Changes for the Better

FX2N

FX2N-4AD-TC SPECIAL FUNCTION BLOCK

USER'S GUIDE

JY992D65501F

This manual contains text, diagrams and explanations which will guide the reader in the correct installation and operation of the FX2N-4AD-TC special function block and should be read and understood before attempting to install or use the unit.
Further information can be found in the main unit manual and programming manual.

Guidelines for the Safety of the User and Protection of the FX2N-4AD-TC special function block.

This manual should be used by trained and competent personnel. The definition of such a person or persons is as follows:

a) Any engineer using the product associated with this manual, should be of a competent nature, trained and qualified to the local and national standards. These engineers should be fully aware of all aspects of safety with regards to automated equipment.
b) Any commissioning or service engineer must be of a competent nature, trained and qualified to the local and national standards.
c) All operators of the completed equipment should be trained to use this product in a safe and coordinated manner in compliance to established safety practices.

Note: The term 'completed equipment' refers to a third party constructed device which contains or uses the product associated with this manual.

Notes on the Symbols Used in this Manual

At various times throughout this manual certain symbols will be used to highlight points of information which are intended to ensure the users personal safety and protect the integrity of equipment.

1) Indicates that the identified danger **WILL** cause physical and property damage.

2) Indicates that the identified danger could **POSSIBLY** cause physical and property damage.

- Under no circumstances will Mitsubishi Electric be liable or responsible for any consequential damage that may arise as a result of the installation or use of this equipment.
- All examples and diagrams shown in this manual are intended only as an aid to understanding the text, not to guarantee operation. Mitsubishi Electric will accept no responsibility for the actual use of the product based on these illustrative examples.
- Owing to the very great variety in possible applications for this equipment, you must satisfy yourself as to its suitability for your own specific application.

1. INTRODUCTION

- The FX2N-4AD-TC analog block amplifies the signal from four thermocouple sensors (Type K or J) and converts the data into 16 bit reading's stored in the main unit. Both Centigrade (°C) and Fahrenheit (°F) can be read.
  Reading resolution is 0.4°C/0.72°F of Type K and 0.3°C/0.54°F of Type J.
- The FX2N-4AD-TC can connected to the FX0N/FX1N/FX3G/FX2N/FX3U/FX2NC/FX3UC series Programmable Controllers (PLC).
- All data transfers and parameter settings are adjusted via software control of the FX2N-4AD-TC; by use of the TO/FROM applied instructions in the PLC.
- The FX2N-4AD-TC occupies 8 I/O points on the PLC expansion bus. The 8 I/O points can be allocated from either inputs or outputs. The FX2N-4AD-TC draws 30mA from the 5V rail of the main unit or powered extension unit.
- Thermocouples with the following specifications can be used: Type K (JIS C 1602-1995)
  Type J (JIS C 1602-1995)

2. EXTERNAL DIMENSIONS

Weight: Approx. 0.3 kg (0.66 lbs) Dimensions: mm (inches)

Accessories: Self adhesive labels for special function block number identification

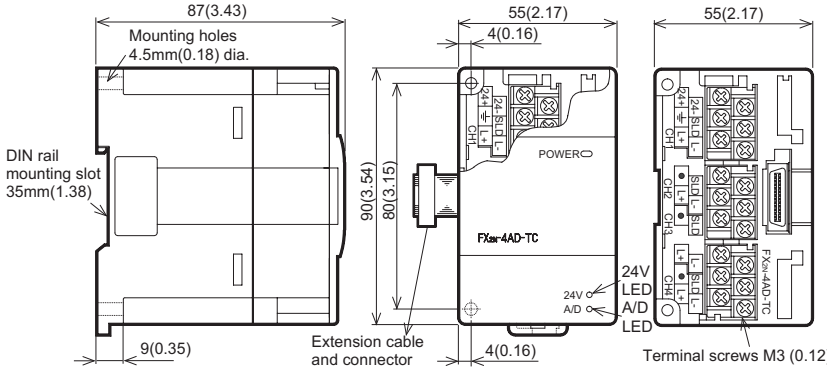

3. CONNECTION WITH PLC

The FX2N-4AD-TC unit can be connected to the FX0N/FX1N/FX3G/FX2N/FX3U/FX2NC/FX3UC PLCs. Other special units of blocks that use FROM/TO commands, such as analog input blocks, analog output blocks and high-speed counter blocks, can be directly connected to the main unit of the PLC or to the right side of other extension blocks or units. For the connection with PLCs, refer to the respective PLC manual.

4. WIRING

4.1 Wiring

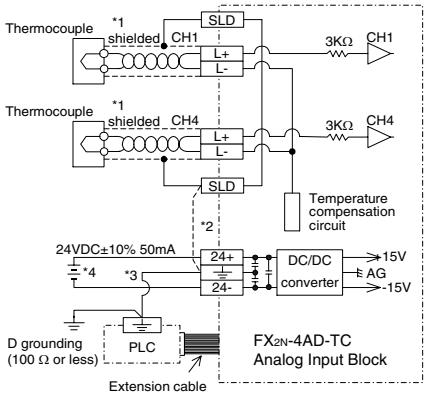

*1: The compensating cables that can be used for connecting with the thermocouple are the following.
Type K: KX-G, KX-GS, KX-H, KX-HS,WX-G,WX-H,VX-G
Type J: JX-G, JX-H
For every 10Ω of line resistance, the compensating cable will indicate a temperature 0.12°C higher than actual.
Check the line resistance before using.
Long compensating cables are more prone to noise interference, therefore a short (less than 100m) compensating cable is recommended.
Unused channels should have a wire link connected between the + and - terminals to prevent an errors being detected on that channel.

*2: If there is excessive electrical noise, connect the SLD terminal to the ground terminal on the unit.

*3: Connect the ground terminals of the FX2N-4AD-TC unit and the main unit. Use grounding on the main unit.

*4: The 24V DC built-in supply of the PLC may be used as the power supply.

4.2 Using crimp terminations

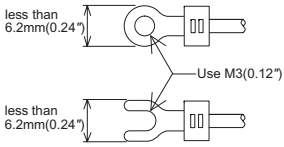

- Use crimp terminals as indicated on the left.
- The tightening torque must be 0.5 and 0.8 N·m. Do not tighten terminal screws exceeding the specified torque. Failure to do so may cause equipment failures or malfunctions.
- Wire only to the module terminals discussed in this manual. Leave all others vacant.

5. SPECIFICATIONS

5.1 General specification

Item	Specification
General specifications	Same as those for the main unit
Dielectric withstand voltage	500V AC, 1min (between all terminals and ground)

5.2 Power supply specification

Item	Specification
Analog circuits	24V DC ± 10%, 50mA
Digital circuits	5V DC, 30mA (internal power supply from the main unit)

5.3 Performance specification

Analog Inputs

Item	Centigrade (°C)		Fahrenheit (°F)	
	Both °C and °F are available by reading the appropriate buffer memory (BFM).			
Input signal	Thermocouple: Type K or J (either can be used for each channel), 4 channels, JIS C 1602-1995			
Rated temperature range	Type K	-100°C to +1,200°C	Type K	-148°F to +2,192°F
	Type J	-100°C to +600°C	Type J	-148°F to +1,112°F
Digital output	16-bit binary with sign			
	Type K	-1,000 to +12,000	Type K	-1480 to +21,920
	Type J	-1,000 to +6,000	Type J	-1480 to +11,120
Resolution	Type K	0.4°C	Type K	0.72°F
	Type J	0.3°C	Type J	0.54°F
Overall accuracy Calibration point	± (0.5% full scale +1°C) Freezing point of pure water 0°C / 32°F			
Conversion speed	(240ms ± 2%) × 4 channels (unused channels are not converted)			

Item	Centigrade (°C)	Fahrenheit (°F)
Conversion Characteristics Readings given at calibration reference point 0°C/32°F (0/320) respectively. (subject to the overall accuracy)	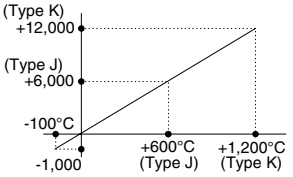	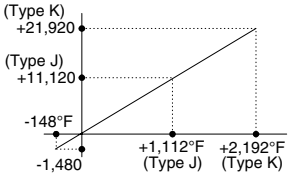

Miscellaneous

Item	Specification
Isolation	Photo-coupler isolation between analog and digital circuits. DC/DC converter isolation of power from main unit. No isolation between analog channels.
Number of occupied I/O points	The block occupies 8 I/O points (can be either inputs or outputs)

Note: Earth-tipped thermocouples are not suitable for use with this unit.

5.4 Installation location

This unit measures temperature according to the temperature difference between the temperature measurement part (themocouple) and the terminal block. If this unit is installed at a place where the temperature of the terminal block varies rapidly, a measuring error may occur. For this reason, the unit should be installed at a place free from excessive temperature variation.

6. ALLOCATION OF BUFFER MEMORIES (BFM)

6.1 Buffer memories

BFM	CONTENTS
*#0	Thermocouple Type K or J selection mode. At shipment: H0000
*# 1 - #4	CH1 to CH4 Averaged temperature reading to be averaged (1 to 256) Default = 8
#5 - #8	CH1 to CH4 Averaged temperature in 0.1°C units
#9 - #12	CH1 to CH4 Present temperature in 0.1°C units
#13 - #16	CH1 to CH4 Averaged temperature in 0.1°F units
#17 - #20	CH1 to CH4 Present temperature in 0.1°F units
#21 - #27	Reserved
*#28	Digital range error latch
#29	Error status
#30	Identification code K2030
#31	Reserved

The FX2N-4AD-TC communicates with the PLC via buffer memories.

BFMs #21 to #27 and #31 are reserved.
All non reserved BFMs can be read by the PLC using the FROM instruction.

BFMs (buffer memories) marked with an "*" can be written to, the special function block using the TO instruction.

1) Buffer Memory BFM #0: Thermocouple Type K or J selection mode

BFM #0 is used to select Type K or J thermocouples for each channel. Each digit of a 4 digit hexadecimal number corresponds to one channel, the least significant digit being channel 1.

[Example]

H3310

- CH1
- CH2
- CH3
- CH4

0 = K type
1 = J type
3 = Not used

- A/D conversion time is 240ms per channel. When “3" (unused) is set for a channel, A/D conversion is not executed for that channel, therefore, the total conversion time is decreased. In the above example, the conversion time is as follows:

  240ms (conversion time per channel) × 2channels (number of channels used) = 480ms (total conversion time)

2) Buffer Memory BFMs #1 to #4: Number of temperature readings to be averaged

When the number of temperature readings to be averaged is specified for BFMs #1 to #4, the averaged data is stored in BFMs #5 to #8 (°C) and #13 to #16 (°F). Only the range 1 to 256 is valid for the number of temperature readings to be averaged. If a value outside of this range is entered, a default value of 8 is used.

3) Buffer Memory BFMs #9 to #12 and #17 to #20: Present temperature

These BFMs store the present value of the input data. This value is stored in units of 0.1°C or 0.1°F, but the resolution is only 0.4°C or 0.72°F for Type K and 0.3°C or 0.54°F for Type J.

6.2 Status Information

1) Buffer Memory BFM #28: Digital range error latch

BFM #29 b10(digital range error) is used to judge whether the measured temperature is within the unit’s range.
BFM #28 latches the error status of each channel and can be used to check for thermocouple disconnection.

When an error occurs the temperature data before the error is latched. If the measured value returns to within valid limits the temperature data returns to normal operation. (Note: The error remains latched in (BFM #28))
An error can be cleared by writing K0 to BFM #28 using the TO instruction or turning off the power.

b15 or b8	b7	b6	b5	b4	b3	b2	b1	b0
Not used	High	Low	High	Low	High	Low	High	Low
	CH4		CH3		CH2		CH1	

Low : Latches ON when the temperature measurement data drops below the lowest temperature limit.

High : Turns ON when the temperature measurement data rises above the highest temperature limit, or when a thermocouple is disconnected.

[Handling for digital range error latch]

FX2N-4AD-TC has already started measuring operation when the PLC main unit's state becomes RUN after turning on the power.
If unstability of the temperature value is expected because of noise just after turning on the power, reset the error once by writing 'K0' to BFM #28.

2) Buffer Memory BFM #29: Error status

Bit devices of BFM #29	ON	OFF
b0 : Error	When either b2 or b3 is ON A/D conversion is stopped for the error channel	No error
b1 : Not used	—	—
b2 : Power source	24V DC power supply failure	power supply normal
b3 : Hardware error	A/D converter or other hardware failure	Hardware Normal
b4 to b9 : Not used	—	—
b10 : Digital range error	Digital output/analog input value is outside the specified range.	Digital output value is normal.
b11 : Averaging number error	Selected number of averaged results is outside the available range -see BFM #1 to #4	Averaging is normal. (between 1 to 256)
b12 to b15 : Not used	—	—

3) Identification Code Buffer Memory BFM #30

The identification code or ID number for this Special Block is read from buffer memory BFM #30 using the FROM instruction. This number for the FX2N-4AD-TC unit is K2030. The PLC can use this facility in its program to identify the special block before commencing data transfer to and from the special block.

7. SYSTEM BLOCK DIAGRAM

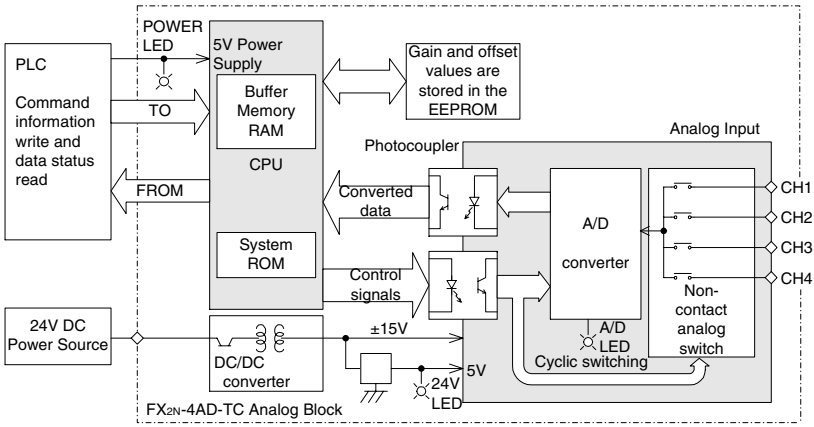

8. EXAMPLE PROGRAM

In the program shown below, the FX2N-4AD-TC occupies the position of special block number 2 (that is the third closest block to the PLC). A Type K thermocouple is used on CH1 and a Type J on CH2. CH3 and CH4 are not used. The averaging count is four. The averaged values in degrees C of input channels CH1 and CH2 are stored respectively in data registers D0 and D1.

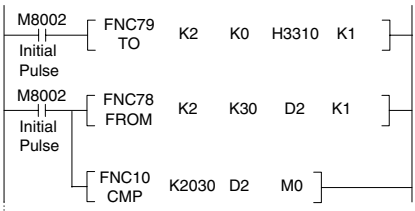

Specify the type of thermocouples.
H3310 R Block No.2 BFM#0
CH4 and CH3: not used
CH2: Type J(1)
CH1: Type K(0)
Block No.2 BFM #30 R (D2)
Identification code

When (K2030) = (D2), M1 = ON.
i.e. When identification code is K2030, M1 = ON.

This initial step checks that the special function block placed at position 2 is actually an FX2N-4AD-TC, i.e. its unit identification number is 2030 (BFM #30). This step is optional, but it provides a software check that the system has been configured correctly.

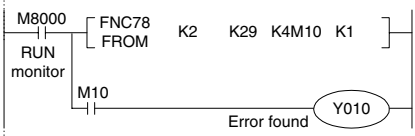

Block No.2 BFM #29 R (K4M10)
Transfer the error status to (M25 to M10).
When error is found, M10 = ON

Represents b0 BFM #29

This step provides optional monitoring of the FX2N-4AD-TC Error Buffer Memory (#29). If there is an Error on the FX2N-4AD-TC, bit b0 of BFM #29 will be set on. This can be read by this program step, and output as a bit device in the PLC (Y010 in this example). Additional Error devices can be output in a similar manner, e.g. b10 BFM #29 Digital range error. (see below)

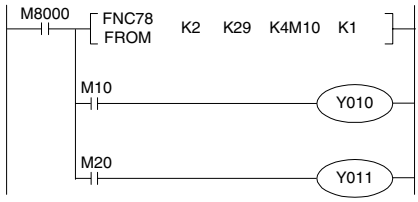

Represents b0 BFM #29

Represents b10 BFM #29

(K4) → (BFM #1), (K4) → (BFM #2)
Number of samples is changed to four on both CH1 and CH2.

(BFM #5) → (D0), (BFM #6) → (D1)
Transfer the averaged temperature value in °C to the data registers.

This step is the actual reading of the FX2N-4AD-TC input channels. It is essentially the only program step which is needed. The "TO" instruction in this example, sets the input channels, CH1 and CH2, to take the average reading of four samples.
The "FROM" instruction reads the average temperatures (BFM #5 and #6) for input channels CH1 and CH2 of the FX2N-4AD-TC. If direct temperature readings are required BFM #9 and #10 should be read instead, e.g.

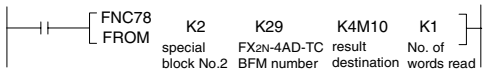

9. DIAGNOSTICS

9.1 Preliminary checks

I. Check whether the input/output wiring and/or extension cables are properly connected on the FX2N-4AD-TC analog special function block.

II. Check that the PLC system configuration limits have not been exceeded, i.e. the number of special function blocks and the total system I/O are within the specified range.

III. Ensure that the correct operating range has been selected for the application.

IV. Check that there is no power overload on either the 5V or 24V power sources, remember the loading on the main unit or a powered extension unit varies according to the number of extension blocks or special function blocks connected.

V. Make sure that the main unit has been switched to RUN.

9.2 Error checking

If the FX2N-4AD-TC special function block does not seem to operate normally, check the following items.

- Check the status of the POWER LED.
  Lit : The extension cable is properly connected.
  Otherwise : Check the connection of the extension cable.
- Check the external wiring.
- Check the status of the “24V” LED (top right corner of the FX2N-4AD-TC).
  Lit : FX2N-4AD-TC is ON, 24V DC power source is ON.
  Otherwise : Possible 24V DC power failure, if ON possible FX2N-4AD-TC failure.
- Check the status of the “A/D” LED (top right corner of the FX2N-4AD-TC).
  Lit : A/D conversion is proceeding normally.
  Otherwise : Check buffer memory #29 (error status). If any bits (b0, b2, b3) are ON, then this is why the A/D LED is OFF.

10.EMC CONSIDERATIONS

Electromagnetic compatibility or EMC must be considered before using the FX2N-4AD-TC.

Mitsubishi recommend that the thermocouple sensors used, should be fitted with a form of seild or screening as protection against EMC noise.

If some form of cable protection is used, the “Shield” must be terminated at the SLD ⏚ terminals as shown in chapter 2.

Because of the delicate nature of all analog signals, failure to take good EMC precautions could lead to EMC noise induced errors; up to ±10% of actual values. This is an absolute worst case figure, users who do take good precautions can expect operation within normal tolerances.

EMC considerations should include selection of good quality cables, good routing of those cables away from potential noise sources.

Additionally it is recommended that signal averaging is used as this will reduce the effects of random noise “spikes”.

Attention

- This product is designed for use in industrial applications.

Note

- Manufactured by: Mitsubishi Electric Corporation
  2-7-3 Marunouchi, Chiyoda-ku, Tokyo, 100-8310 Japan
- Manufactured at: Mitsubishi Electric Corporation Himeji Works
  840 Chiyoda-machi, Himeji, Hyogo, 670-8677 Japan
- Authorized Representative in the European Community: Mitsubishi Electric Europe B.V.
  Gothaer Str. 8, 40880 Ratingen, Germany

This manual confers no industrial property rights or any rights of any other kind, nor does it confer any patent licenses. Mitsubishi Electric Corporation cannot be held responsible for any problems involving industrial property rights which may occur as a result of using the contents noted in this manual.

Manual number : JY992D65501

Manual revision : F

Date : November 2010

MITSUBISHI ELECTRIC CORPORATION

HEAD OFFICE : TOKYO BUILDING, 2-7-3 MARUNOUCHI, CHIYODA-KU, TOKYO 100-8310, JAPAN
HIMEJI WORKS : 840, CHIYODA CHO, HIMEJI, JAPAN

MITSUBISHI
PROGRAMMABLE CONTROLLERS
MELSEC-F

Changes for the Better

FX2N

FX2N-4AD-TC SPECIAL FUNCTION BLOCK

USER'S GUIDE

JY992D65501F

This manual contains text, diagrams and explanations which will guide the reader in the correct installation and operation of the FX2N-4AD-TC special function block and should be read and understood before attempting to install or use the unit.
Further information can be found in the main unit manual and programming manual.

Guidelines for the Safety of the User and Protection of the FX2N-4AD-TC special function block.

This manual should be used by trained and competent personnel. The definition of such a person or persons is as follows:

a) Any engineer using the product associated with this manual, should be of a competent nature, trained and qualified to the local and national standards. These engineers should be fully aware of all aspects of safety with regards to automated equipment.
b) Any commissioning or service engineer must be of a competent nature, trained and qualified to the local and national standards.
c) All operators of the completed equipment should be trained to use this product in a safe and coordinated manner in compliance to established safety practices.

Note: The term 'completed equipment' refers to a third party constructed device which contains or uses the product associated with this manual.

Notes on the Symbols Used in this Manual

At various times throughout this manual certain symbols will be used to highlight points of information which are intended to ensure the users personal safety and protect the integrity of equipment.

1) Indicates that the identified danger **WILL** cause physical and property damage.

2) Indicates that the identified danger could **POSSIBLY** cause physical and property damage.

- Under no circumstances will Mitsubishi Electric be liable or responsible for any consequential damage that may arise as a result of the installation or use of this equipment.
- All examples and diagrams shown in this manual are intended only as an aid to understanding the text, not to guarantee operation. Mitsubishi Electric will accept no responsibility for the actual use of the product based on these illustrative examples.
- Owing to the very great variety in possible applications for this equipment, you must satisfy yourself as to its suitability for your own specific application.

1. INTRODUCTION

- The FX2N-4AD-TC analog block amplifies the signal from four thermocouple sensors (Type K or J) and converts the data into 16 bit reading's stored in the main unit. Both Centigrade (°C) and Fahrenheit (°F) can be read.
  Reading resolution is 0.4°C/0.72°F of Type K and 0.3°C/0.54°F of Type J.
- The FX2N-4AD-TC can connected to the FX0N/FX1N/FX3G/FX2N/FX3U/FX2NC/FX3UC series Programmable Controllers (PLC).
- All data transfers and parameter settings are adjusted via software control of the FX2N-4AD-TC; by use of the TO/FROM applied instructions in the PLC.
- The FX2N-4AD-TC occupies 8 I/O points on the PLC expansion bus. The 8 I/O points can be allocated from either inputs or outputs. The FX2N-4AD-TC draws 30mA from the 5V rail of the main unit or powered extension unit.
- Thermocouples with the following specifications can be used: Type K (JIS C 1602-1995)
  Type J (JIS C 1602-1995)

2. EXTERNAL DIMENSIONS

Weight: Approx. 0.3 kg (0.66 lbs) Dimensions: mm (inches)
Accessories: Self adhesive labels for special function block number identification

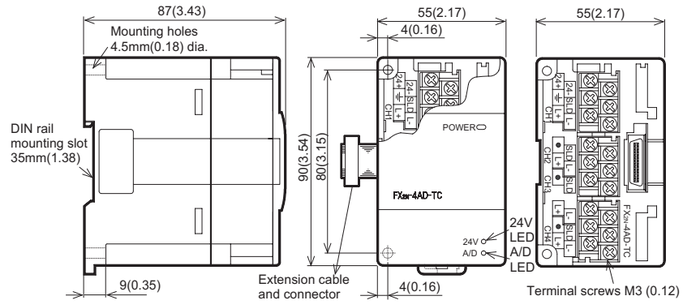

3. CONNECTION WITH PLC

The FX2N-4AD-TC unit can be connected to the FX0N/FX1N/FX3G/FX2N/FX3U/FX2NC/FX3UC PLCs. Other special units of blocks that use FROM/TO commands, such as analog input blocks, analog output blocks and high-speed counter blocks, can be directly connected to the main unit of the PLC or to the right side of other extension blocks or units. For the connection with PLCs, refer to the respective PLC manual.

4. WIRING

4.1 Wiring

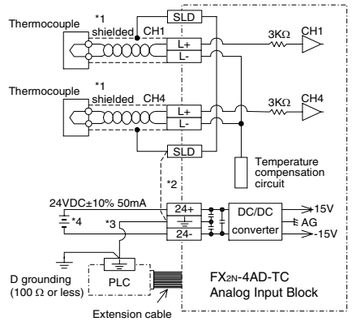

*1: The compensating cables that can be used for connecting with the thermocouple are the following.
Type K: KX-G, KX-GS, KX-H, KX-HS,WX-G,WX-H,VX-G
Type J: JX-G, JX-H
For every 10Ω of line resistance, the compensating cable will indicate a temperature 0.12°C higher than actual.
Check the line resistance before using.
Long compensating cables are more prone to noise interference, therefore a short (less than 100m) compensating cable is recommended.
Unused channels should have a wire link connected between the + and - terminals to prevent an errors being detected on that channel.

*2: If there is excessive electrical noise, connect the SLD terminal to the ground terminal on the unit.

*3: Connect the ground terminals of the FX2N-4AD-TC unit and the main unit. Use grounding on the main unit.

*4: The 24V DC built-in supply of the PLC may be used as the power supply.

4.2 Using crimp terminations

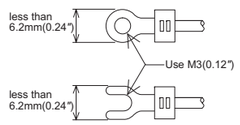

- Use crimp terminals as indicated on the left.
- The tightening torque must be 0.5 and 0.8 N·m. Do not tighten terminal screws exceeding the specified torque. Failure to do so may cause equipment failures or malfunctions.
- Wire only to the module terminals discussed in this manual. Leave all others vacant.

5. SPECIFICATIONS

5.1 General specification

Item	Specification
General specifications	Same as those for the main unit
Dielectric withstand voltage	500V AC, 1min (between all terminals and ground)

5.2 Power supply specification

Item	Specification
Analog circuits	24V DC ± 10%, 50mA
Digital circuits	5V DC, 30mA (internal power supply from the main unit)

5.3 Performance specification

Analog Inputs

Item	Centigrade (°C)		Fahrenheit (°F)	
	Both °C and °F are available by reading the appropriate buffer memory (BFM).			
Input signal	Thermocouple: Type K or J (either can be used for each channel), 4 channels, JIS C 1602-1995			
Rated temperature range	Type K	-100°C to +1,200°C	Type K	-148°F to +2,192°F
	Type J	-100°C to +600°C	Type J	-148°F to +1,112°F
Digital output	16-bit binary with sign			
	Type K	-1,000 to +12,000	Type K	-1480 to +21,920
	Type J	-1,000 to +6,000	Type J	-1480 to +11,120
Resolution	Type K	0.4°C	Type K	0.72°F
	Type J	0.3°C	Type J	0.54°F
Overall accuracy Calibration point	± (0.5% full scale +1°C) Freezing point of pure water 0°C / 32°F			
Conversion speed	(240ms ± 2%) × 4 channels (unused channels are not converted)			

Item	Centigrade (°C)	Fahrenheit (°F)
Conversion Characteristics Readings given at calibration reference point 0°C/32°F (0/320) respectively. (subject to the overall accuracy)	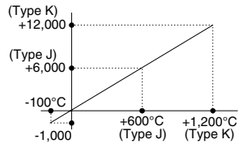	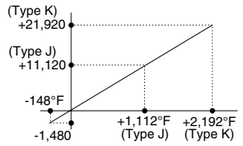

Miscellaneous

Item	Specification
Isolation	Photo-coupler isolation between analog and digital circuits. DC/DC converter isolation of power from main unit. No isolation between analog channels.
Number of occupied I/O points	The block occupies 8 I/O points (can be either inputs or outputs)

Note: Earth-tipped thermocouples are not suitable for use with this unit.

5.4 Installation location

This unit measures temperature according to the temperature difference between the temperature measurement part (themocouple) and the terminal block. If this unit is installed at a place where the temperature of the terminal block varies rapidly, a measuring error may occur. For this reason, the unit should be installed at a place free from excessive temperature variation.

6. ALLOCATION OF BUFFER MEMORIES (BFM)

6.1 Buffer memories

BFM	CONTENTS
*#0	Thermocouple Type K or J selection mode. At shipment: H0000
*# 1 - #4	CH1 to CH4 Averaged temperature reading to be averaged (1 to 256) Default = 8
#5 - #8	CH1 to CH4 Averaged temperature in 0.1°C units
#9 - #12	CH1 to CH4 Present temperature in 0.1°C units
#13 - #16	CH1 to CH4 Averaged temperature in 0.1°F units
#17 - #20	CH1 to CH4 Present temperature in 0.1°F units
#21 - #27	Reserved
*#28	Digital range error latch
#29	Error status
#30	Identification code K2030
#31	Reserved

The FX2N-4AD-TC communicates with the PLC via buffer memories.

BFMs #21 to #27 and #31 are reserved.
All non reserved BFMs can be read by the PLC using the FROM instruction.

BFMs (buffer memories) marked with an "*" can be written to, the special function block using the TO instruction.

1) Buffer Memory BFM #0: Thermocouple Type K or J selection mode

BFM #0 is used to select Type K or J thermocouples for each channel. Each digit of a 4 digit hexadecimal number corresponds to one channel, the least significant digit being channel 1.

[Example]

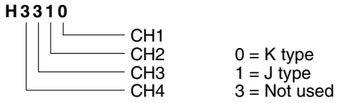

- A/D conversion time is 240ms per channel. When "3" (unused) is set for a channel, A/D conversion is not executed for that channel, therefore, the total conversion time is decreased. In the above example, the conversion time is as follows:

  240ms (conversion time per channel) × 2channels (number of channels used) = 480ms (total conversion time)

2) Buffer Memory BFMs #1 to #4: Number of temperature readings to be averaged

When the number of temperature readings to be averaged is specified for BFMs #1 to #4, the averaged data is stored in BFMs #5 to #8 (°C) and #13 to #16 (°F). Only the range 1 to 256 is valid for the number of temperature readings to be averaged. If a value outside of this range is entered, a default value of 8 is used.

3) Buffer Memory BFMs #9 to #12 and #17 to #20: Present temperature

These BFMs store the present value of the input data. This value is stored in units of 0.1°C or 0.1°F, but the resolution is only 0.4°C or 0.72°F for Type K and 0.3°C or 0.54°F for Type J.

6.2 Status Information

1) Buffer Memory BFM #28: Digital range error latch

BFM #29 b10(digital range error) is used to judge whether the measured temperature is within the unit's range.
BFM #28 latches the error status of each channel and can be used to check for thermocouple disconnection.

When an error occurs the temperature data before the error is latched. If the measured value returns to within valid limits the temperature data returns to normal operation. (Note: The error remains latched in (BFM #28))
An error can be cleared by writing K0 to BFM #28 using the TO instruction or turning off the power.

b15 or b8	b7	b6	b5	b4	b3	b2	b1	b0
Not used	High	Low	High	Low	High	Low	High	Low
	CH4		CH3		CH2		CH1	

Low : Latches ON when the temperature measurement data drops below the lowest temperature limit.

High : Turns ON when the temperature measurement data rises above the highest temperature limit, or when a thermocouple is disconnected.

[Handling for digital range error latch]

FX2N-4AD-TC has already started measuring operation when the PLC main unit's state becomes RUN after turning on the power.
If unstability of the temperature value is expected because of noise just after turning on the power, reset the error once by writing 'K0' to BFM #28.

2) Buffer Memory BFM #29: Error status

Bit devices of BFM #29	ON	OFF
b0 : Error	When either b2 or b3 is ON A/D conversion is stopped for the error channel	No error
b1 : Not used	—	—
b2 : Power source	24V DC power supply failure	power supply normal
b3 : Hardware error	A/D converter or other hardware failure	Hardware Normal
b4 to b9 : Not used	—	—
b10 : Digital range error	Digital output/analog input value is outside the specified range.	Digital output value is normal.
b11 : Averaging number error	Selected number of averaged results is outside the available range -see BFM #1 to #4	Averaging is normal. (between 1 to 256)
b12 to b15 : Not used	—	—

3) Identification Code Buffer Memory BFM #30

The identification code or ID number for this Special Block is read from buffer memory BFM #30 using the FROM instruction. This number for the FX2N-4AD-TC unit is K2030. The PLC can use this facility in its program to identify the special block before commencing data transfer to and from the special block.

7. SYSTEM BLOCK DIAGRAM

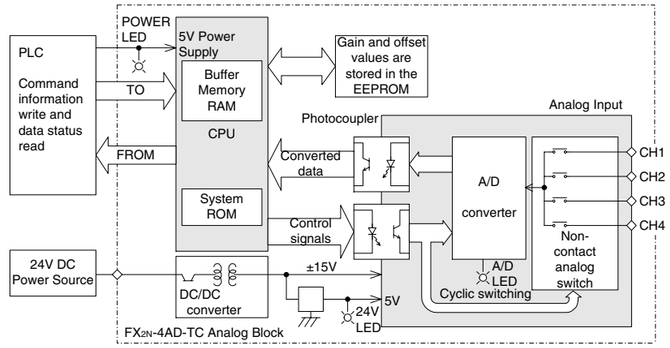

8. EXAMPLE PROGRAM

In the program shown below, the FX2N-4AD-TC occupies the position of special block number 2 (that is the third closest block to the PLC). A Type K thermocouple is used on CH1 and a Type J on CH2. CH3 and CH4 are not used. The averaging count is four. The averaged values in degrees C of input channels CH1 and CH2 are stored respectively in data registers D0 and D1.

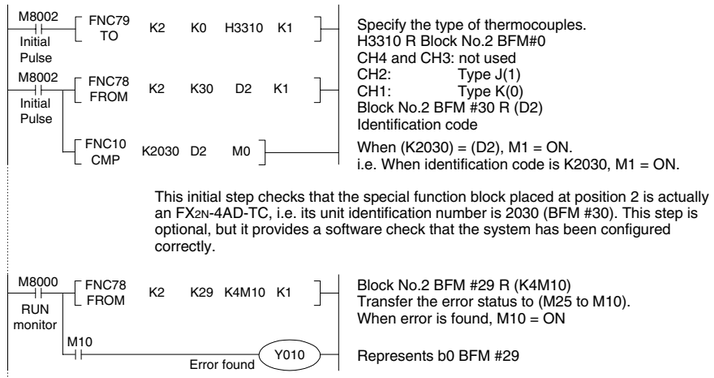

This initial step checks that the special function block placed at position 2 is actually an FX2N-4AD-TC, i.e. its unit identification number is 2030 (BFM #30). This step is optional, but it provides a software check that the system has been configured correctly.

This step provides optional monitoring of the FX2N-4AD-TC Error Buffer Memory (#29). If there is an Error on the FX2N-4AD-TC, bit b0 of BFM #29 will be set on. This can be read by this program step, and output as a bit device in the PLC (Y010 in this example). Additional Error devices can be output in a similar manner, e.g. b10 BFM #29 Digital range error. (see below)

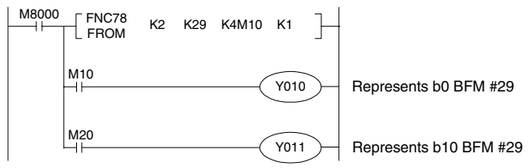

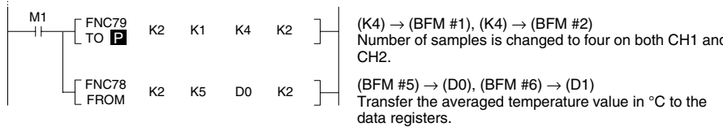

This step is the actual reading of the FX2N-4AD-TC input channels. It is essentially the only program step which is needed. The "TO" instruction in this example, sets the input channels, CH1 and CH2, to take the average reading of four samples.
The "FROM" instruction reads the average temperatures (BFM #5 and #6) for input channels CH1 and CH2 of the FX2N-4AD-TC. If direct temperature readings are required BFM #9 and #10 should be read instead, e.g.

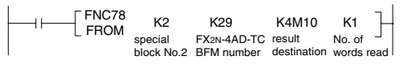

9. DIAGNOSTICS

9.1 Preliminary checks

I. Check whether the input/output wiring and/or extension cables are properly connected on the FX2N-4AD-TC analog special function block.

II. Check that the PLC system configuration limits have not been exceeded, i.e. the number of special function blocks and the total system I/O are within the specified range.

III. Ensure that the correct operating range has been selected for the application.

IV. Check that there is no power overload on either the 5V or 24V power sources, remember the loading on the main unit or a powered extension unit varies according to the number of extension blocks or special function blocks connected.

V. Make sure that the main unit has been switched to RUN.

9.2 Error checking

If the FX2N-4AD-TC special function block does not seem to operate normally, check the following items.

- Check the status of the POWER LED.
  Lit : The extension cable is properly connected.
  Otherwise : Check the connection of the extension cable.
- Check the external wiring.
- Check the status of the "24V" LED (top right corner of the FX2N-4AD-TC).
  Lit : FX2N-4AD-TC is ON, 24V DC power source is ON.
  Otherwise : Possible 24V DC power failure, if ON possible FX2N-4AD-TC failure.
- Check the status of the "A/D" LED (top right corner of the FX2N-4AD-TC).
  Lit : A/D conversion is proceeding normally.
  Otherwise : Check buffer memory #29 (error status). If any bits (b0, b2, b3) are ON, then this is why the A/D LED is OFF.

10.EMC CONSIDERATIONS

Electromagnetic compatibility or EMC must be considered before using the FX2N-4AD-TC.

Mitsubishi recommend that the thermocouple sensors used, should be fitted with a form of seild or screening as protection against EMC noise.

If some form of cable protection is used, the "Shield" must be terminated at the SLD ⏚ terminals as shown in chapter 2.

Because of the delicate nature of all analog signals, failure to take good EMC precautions could lead to EMC noise induced errors; up to ±10% of actual values. This is an absolute worst case figure, users who do take good precautions can expect operation within normal tolerances.

EMC considerations should include selection of good quality cables, good routing of those cables away from potential noise sources.

Additionally it is recommended that signal averaging is used as this will reduce the effects of random noise "spikes".

Attention

- This product is designed for use in industrial applications.

Note

- Manufactured by: Mitsubishi Electric Corporation
  2-7-3 Marunouchi, Chiyoda-ku, Tokyo, 100-8310 Japan
- Manufactured at: Mitsubishi Electric Corporation Himeji Works
  840 Chiyoda-machi, Himeji, Hyogo, 670-8677 Japan
- Authorized Representative in the European Community: Mitsubishi Electric Europe B.V.
  Gothaer Str. 8, 40880 Ratingen, Germany

This manual confers no industrial property rights or any rights of any other kind, nor does it confer any patent licenses. Mitsubishi Electric Corporation cannot be held responsible for any problems involving industrial property rights which may occur as a result of using the contents noted in this manual.

Manual number : JY992D65501
Manual revision : F
Date : November 2010

MITSUBISHI ELECTRIC CORPORATION
HEAD OFFICE : TOKYO BUILDING, 2-7-3 MARUNOUCHI, CHIYODA-KU, TOKYO 100-8310, JAPAN
HIMEJI WORKS : 840, CHIYODA CHO, HIMEJI, JAPAN